Cub Cadet
COMMERCIAL

Hydrostatic Zero-Turn Commercial Riding Mower

Turf Equipment

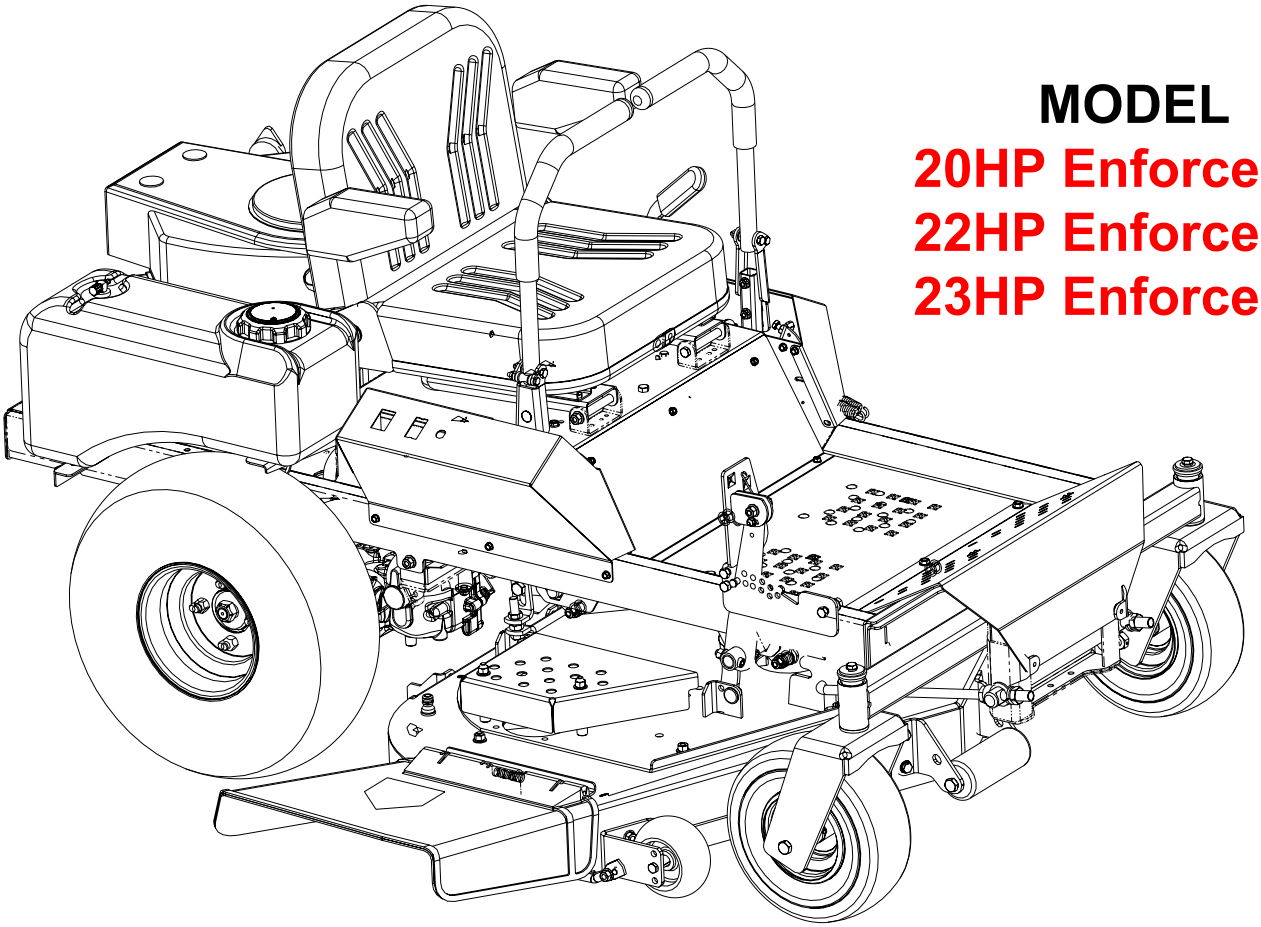

MODEL

20HP Enforcer 44
22HP Enforcer 48
23HP Enforcer 54

ILLUSTRATED PARTS LIST

TABLE OF CONTENTS

Frame Assembly 3
44" Fabricated Cutter Deck. . . . . 4 and 5
44" Fabricated Deck Spindle Assembly . . . . . 6 and 7
48" Fabricated Cutter Deck. . . . . 8 and 9
48" Fabricated Deck Spindle Assembly . . . . . 10 and 11
54" Fabricated Cutter Deck. . . . . 12 and 13
54" Fabricated Deck Spindle Assembly . . . . . 14 and 15
Control Assembly 16
Brake Assembly 17
44" Front Caster & Tire Assembly 18
48" Front Caster & Tire Assembly 19
54" Front Caster & Tire Assembly 20
Steering Assembly 21
Drivetrain Assembly 22
20 HP Kohler Engine Assembly 23
22 HP Kohler Engine Assembly 24
23 HP Kohler Engine Assembly 25
Electrical Assembly 26
Seat Assembly 27
Lift Assembly 28
44" Decal Map 29
48" Decal Map 30
54" Decal Map 31

NOTE, For **painted parts,** please refer to the list of color codes below. Please add the applicable color code, whereever needed, to the part number to order a replacement part. For instance, if a part, numbered 0100xxxx, is painted Cub Yellow, the part number to order would be 0100xxxx-4021.

Cub Yellow: 4021
Powder Black: 0637

Frame Assembly- Figure 1 and Parts List

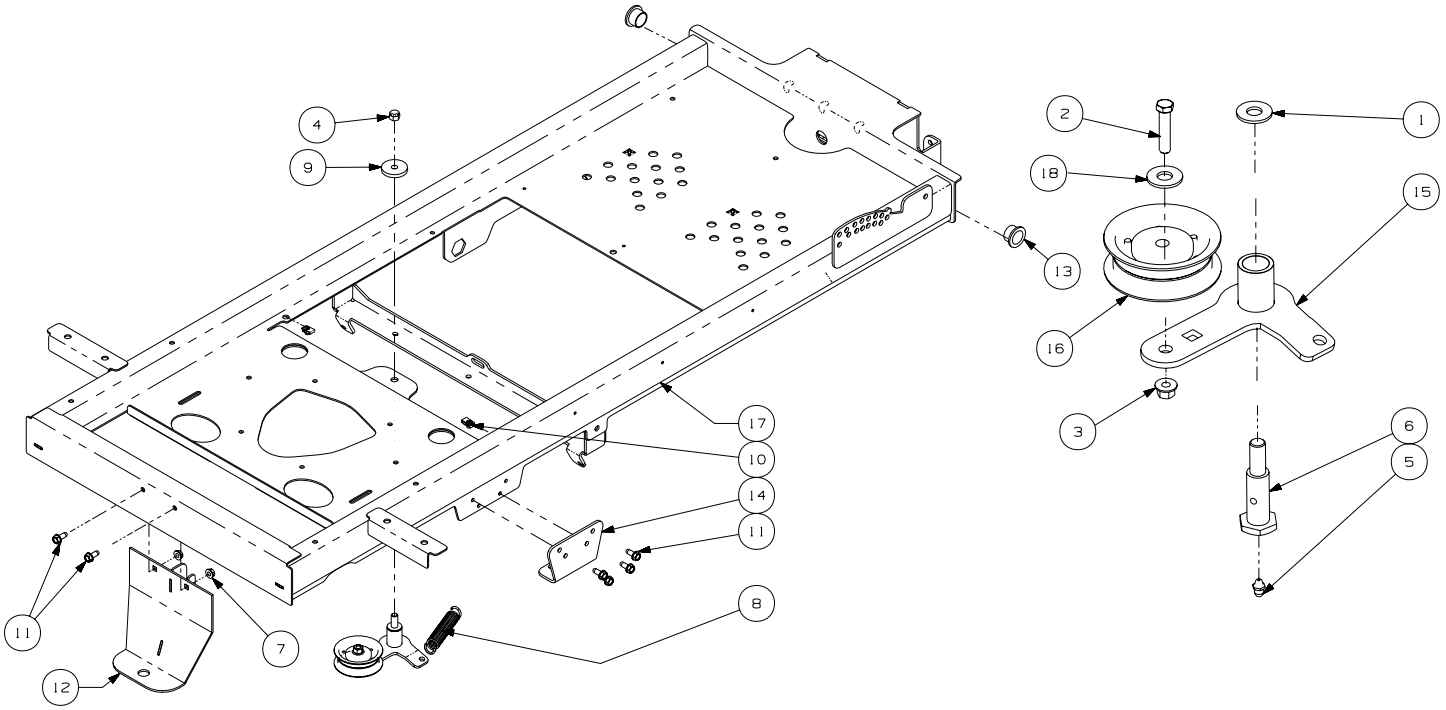

GD: 02004984-11/14/07

Ref. No.	Part No.	Description	Qty.
1	00006168	Flat Washer, 3/8 zinc	1
2	01000512	Hex Cap Screw, 3/8-16 x 1-3/4	1
3	00022560	Hex Nut, 3/8-16 Flange Lock	1
4	00027279	Nylock Nut, 7/16-14	1
5	00060078	Grease Fitting, 1/4-28 x 3/16	1
6	01000505	Shoulder Bolt	1
7	01000635	Nut, 5/16-18, Hexflange Lock	10
8	01000199	Extension Spring, 1.00 OD x 5.00 lg	1
9	01003269	Flat Washer, 7/16 ID x 1.75 OD	1
10	01008539	U-Nut, 1/4-20	2
11	01008620	Self Tapping Screw 5/16-18 x .750	10
12	02002563	Hitch	1
13	02002628	Bronze Bushing, .875 ID x 1.50 OD	2
14	02002641	Transmission Mounting Bracket	2
15	02003641	Idler Arm Assembly includes:	1
	01000308	Bearing	2
16	02004558	Flat Idler Pully w/ adaptor	1
17	02004865	Frame Assembly Weldment	1
18	00061053	Washer, 3/8, SS	1

44" Fabricated Cutter Deck - Figure 2

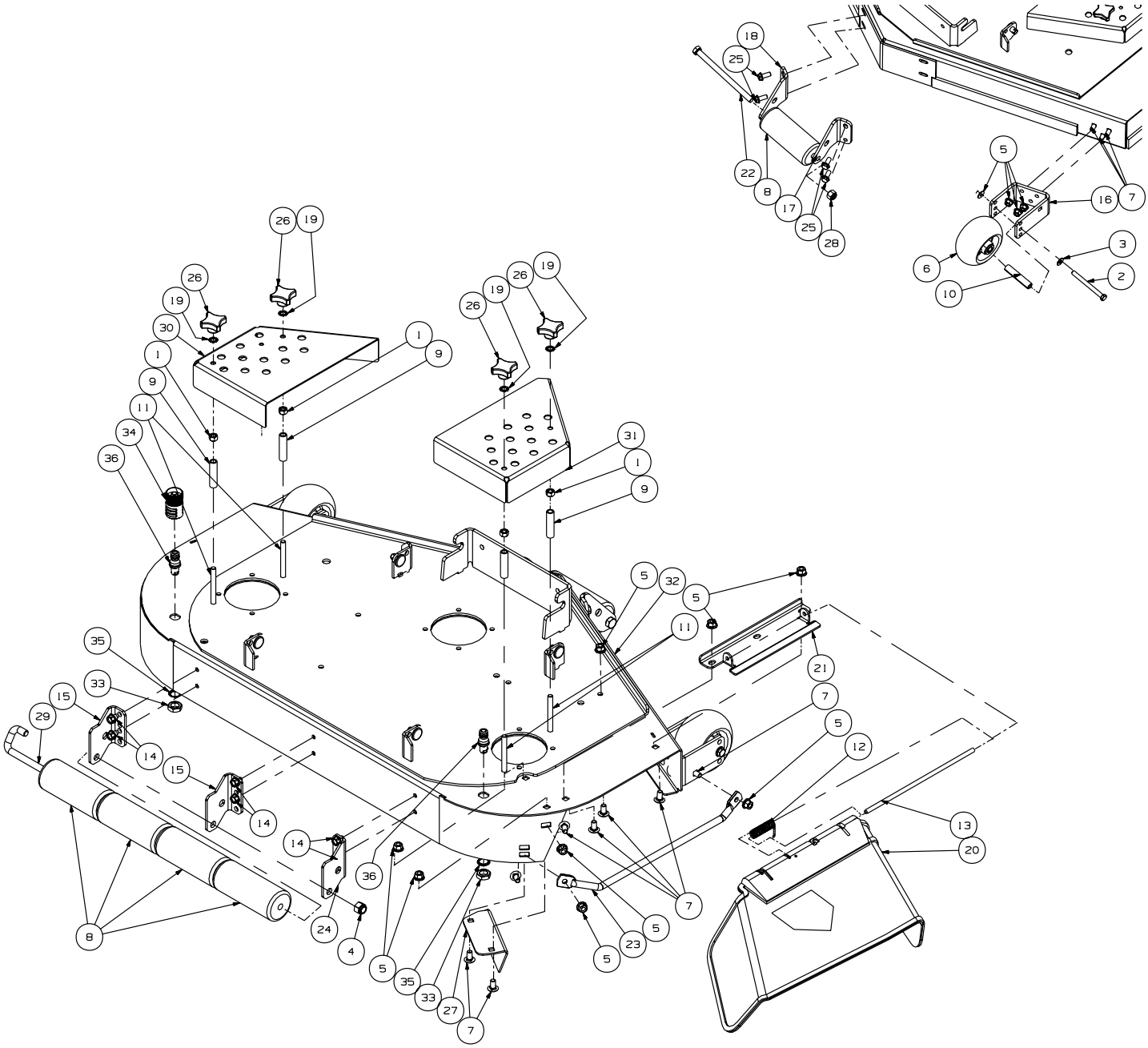

GD: 02005085-10/31/07

44" Fabricated Cutter Deck - Parts List for Figure 2

Ref. No.	Part No.	Description	Qty.
1	00006131	Hex Nut 3/8-16	4
2	00011925	Hex Cap Screw, 3/8-16, 3.75	2
3	00012158	Washer	2
4	00012428	Hex Nut, 1/2-13, Insert Lock	1
5	00022560	Hex Nut, 3/8-16 Flange Lock	16
6	01000343	Complete Wheel, 5.00 Dia	2
7	01000372	Carriage Bolt 3/8-16 x .75	14
8	01000385	Front Roller	5
9	01000395	Spacer Stop Deck	4
10	01000398	Wheel Spacer	2
11	01002750	Carriage Bolt, 3/8-16 x 3.5 Lg	4
12	01003253	Torsion Spring	1
13	01003254	Chute Deflector Rod	1
14	01004304	Self Tapping Screw, 5/16-18 x 1/2	6
15	01004707	Fabricted Deck Roller Mount Bracket	2
16	01005243	Front Anti-Scalp Wheel Mount Bracket	2
17	01005244	Left Hand Front Roller Mount Bracket	1
18	01005245	Right Hand Front Roller Mount Bracket	1
19	01005851	External Washer, 3/8	4
20	01006693	Deflector Chute	1
21	01006748	Deflector Chute Bracket	1
22	01006961	Hex Cap Screw, 1/2-20 x 7.50	1
23	01008644	Fabricated Deck Finger Guard	1
24	01008790	Grass Catcher Roller Bracket	1
25	01009243	Self Tapping Screw, 3/8-16 x 0.875	4
26	02000040	Plastic Knob	4
27	02001235	Fabricated Deck, Chute Bracket	1
28	02002299	Lock Nut, Nylon Insert, 1/2-20	1
29	02002799	J-Hook w/ Threaded Roller	1
30	02003605	Belt Cover, LH	1
31	02003606	Belt Cover, RH	1
32	02005230	44 Fabricated Deck Assembly	1
33	712-0641	Hex Nut, M16-1.5	2
34	721-04041	Water Nozzle Adaptor	1
35	736-0760	Lock Washer, 17 x 23.8 x 1.95	2
36	737-04003C	Deck Water Nozzle	2

44" Fabricated Deck Spindle Assembly- Figure 3

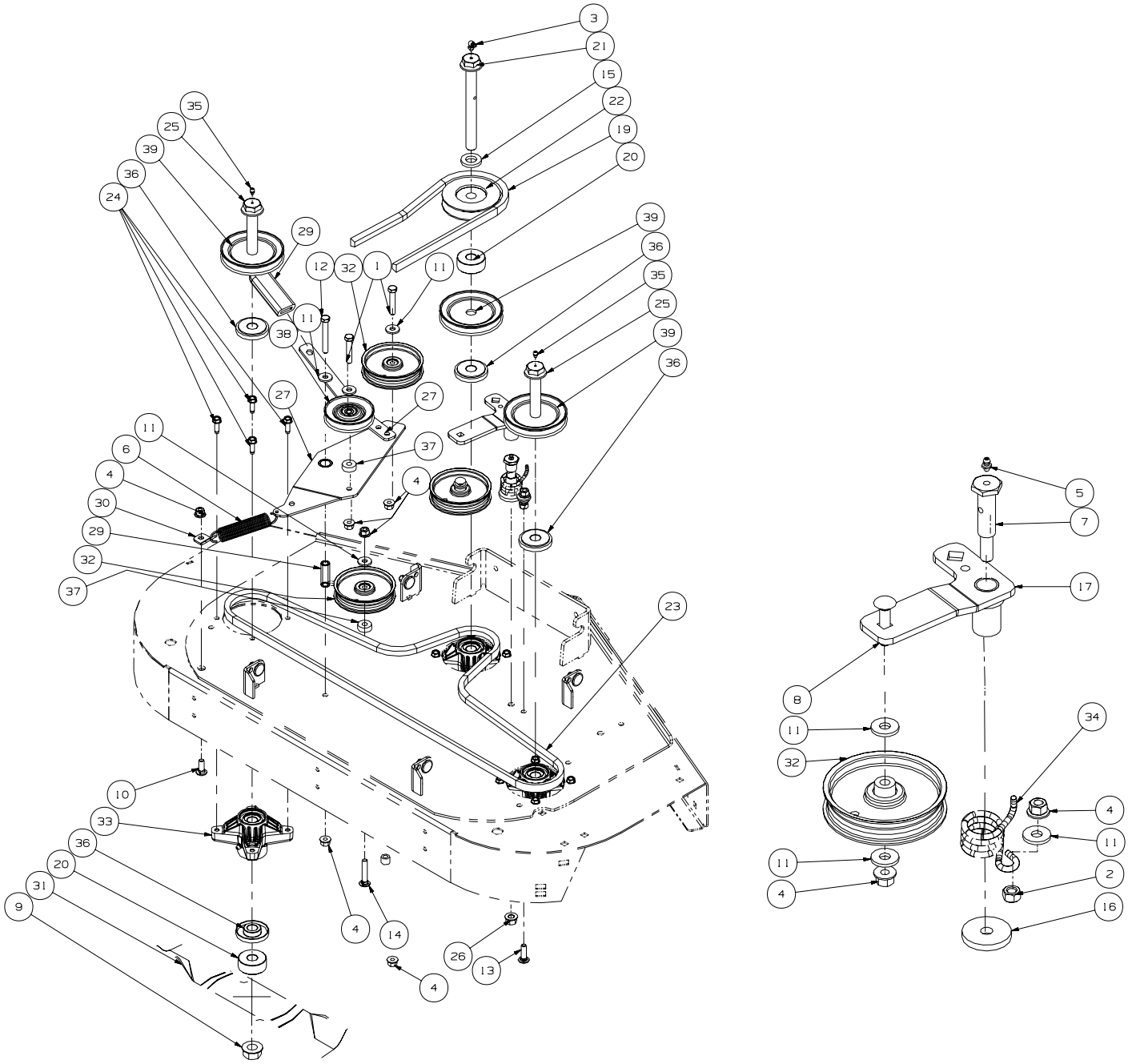

GD: 02004975-11/15/07

44" Fabricated Deck Spindle Assembly- Parts List for Figure 3

Ref. No.	Part No.	Description	Qty.
1	00002528	Hex Cap Screw, 3/8-16 x 2.00	2
2	00006131	Hex Nut 3/8-16	1
3	00012226	Grease Fitting, 90°	1
4	00022560	Hex Nut, 3/8-16 Flange Lock	8
5	00060078	Grease Fitting, 1/4-28 x 3/16	1
6	01000199	Extension Spring, 1.0 OD x 5.00	1
7	01000302	Shoulder Screw, 7/16-14	1
8	01000364	Hex Carriage Screw, 3/8-16, 1.75	1
9	01000380	Hex Flange Nut, 3/4-16	3
10	01000643	Carriage Bolt, 3/8-16 x 1.00	1
11	01000723	Flat Washer, .406 ID x 1.0 OD x .105	7
12	01001371	Hex Cap Screw 3/8-16 x 2.75	1
13	01002010	Carraige Screw, 3/8-16 x 1.25	1
14	01002011	Carriage Bolt, 3/8-16 x 2.00	1
15	01003123	Spacer, .812 ID x .218	1
16	01003269	Flat Washer, 7/16 ID x 1.75 OD	1
17	01005737	Idler Arm Assembly, Deck Spindle includes:	1
	01000308	Bearing	2
18	01007312	Spacer, .625 OD x .385 ID x 1/2	1
19	01009787	Belt Drive	1
20	01010014	Spacer .760 ID x 2.00 OD x 0.790	4
21	02000071	Spindle Bolt, 3/4-16 x 7.155	1
22	02000079	V-Pulley 4.25 OD Casting	1
23	02000103	V-Belt, A-Section	1
24	02000762	Self Tapping Screw 5/16-18 x 1.00	12
25	02000819	Spindle Bolt 3/4-16 x 5.37	2
26	02000948	Nut, 7/16-20, FlangeLock	1
27	02003795	Idler Arm Assembly, Double, includes:	1
	01000308	Bearing	2
28	02003640	Spacer, .39 ID x .625 OD x 1.875	1
29	02003740	Grip, 1.0 x 3.2 x .25	1
30	02004195	Tension Spring Bracket	1
31	02005020	Blade, 15.94, Hi-Lift, 0.756 ID	3
32	02005077	Flat Pulley	3
33	618-04426	Spindle Assembly	3
34	732-3067	Idler Torsion Spring	1
35	737-3000	Grease Fitting	2
36	748-3065A	Spindle Spacer	6
37	750-3119	Spacer .406 ID x 1.0 OD	2
38	756-0399	V-Pulley, 3.5 OD	1
39	756-3089	Pulley	3

48" Fabricated Cutter Deck - Figure 4

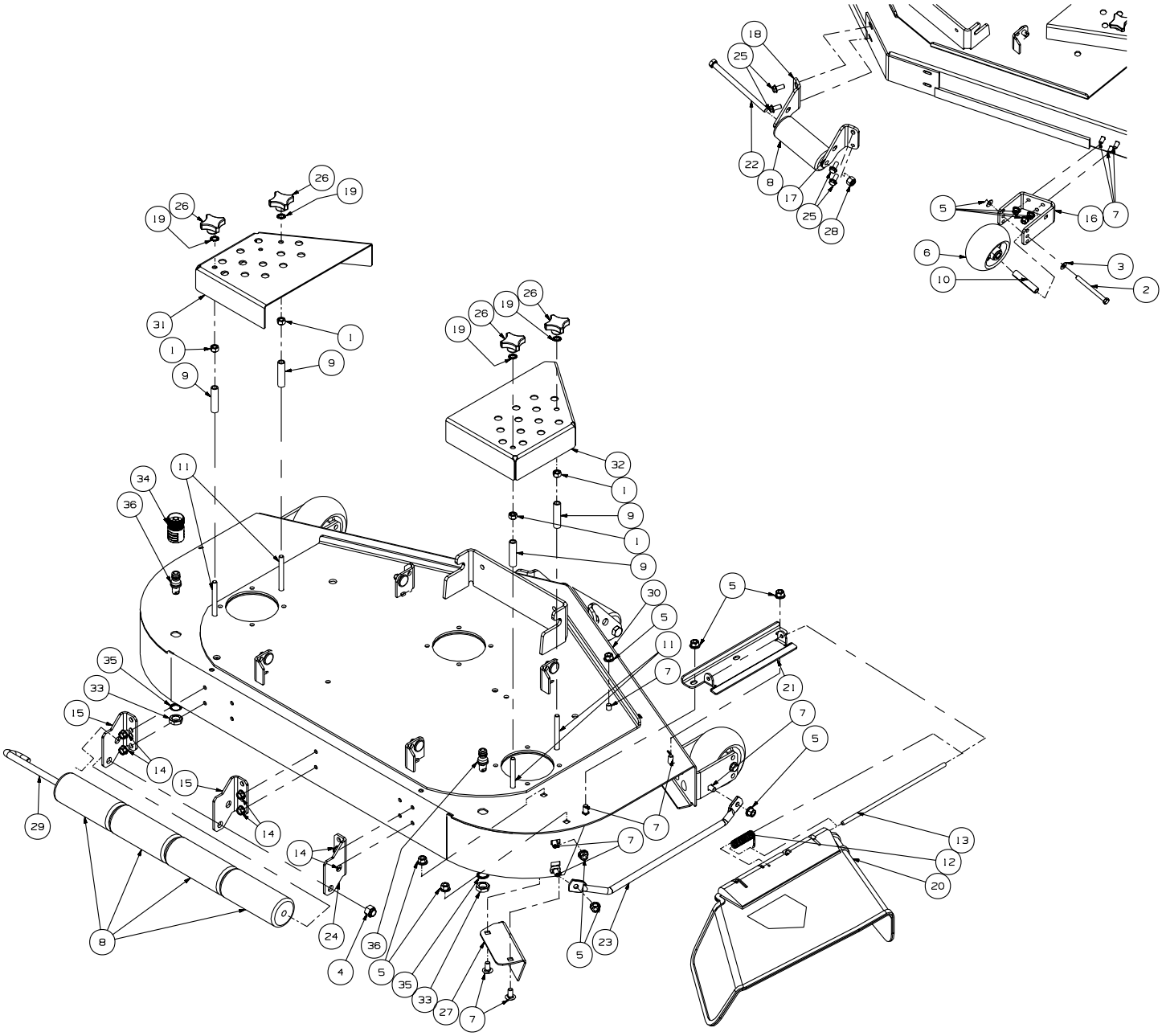

GD: 02005084-11/08/07

48" Fabricated Cutter Deck - Parts List for Figure 4

Ref. No.	Part No.	Description	Qty.
1	00006131	Nut, 3/8-16, Hex	4
2	00011925	Hex Cap Screw, 3/8-16, 3.75	2
3	00012158	Washer	2
4	00012428	Hex Nut, 1/2-13, Insert Lock	1
5	00022560	Hex Nut, 3/8-16 Flange Lock	16
6	01000343	Complete Wheel, 5.00 Dia	2
7	01000372	Carriage Bolt 3/8-16 x .75	14
8	01000385	Front Roller	5
9	01000395	Spacer	4
10	01000398	Wheel Spacer	2
11	01002750	Carriage Bolt, 3/8-16 x 3.50	4
12	01003253	Torsion Spring	1
13	01003254	Chute Deflector Rod	1
14	01004304	Self Tapping Screw, 5/16-18 x 1/2	6
15	01004707	Fabricted Deck Roller Mount Bracket	2
16	01005243	Front Anti-Scalp Wheel Mount Bracket	2
17	01005244	Left Hand Front Roller Mount Bracket	1
18	01005245	Right Hand Front Roller Mount Bracket	1
19	01005851	External Washer, 3/8	4
20	01006693	Deflector Chute	1
21	01006748	Deflector Chute Bracket	1
22	01006961	Hex Cap Screw, 1/2-20 x 7.50	1
23	01008644	Fabricated Deck Finger Guard	1
24	01008790	Grass Catcher Roller Bracket	1
25	01009243	Self Tapping Screw, 3/8-16 x 0.875	4
26	02000040	Plastic Knob	4
27	02001235	Fabricated Deck, Chute Bracket	1
28	02002299	Lock Nut, Nylon Insert, 1/2-20	1
29	02002799	J-Hook w/ Threaded Roller	1
30	02005231	48 Fabricated Deck Assembly	1
31	02003605	Belt Cover, LH	1
32	02003606	Belt Cover, RH	1
33	712-0641	Hex Nut, M16-1.5	2
34	721-04041	Water Nozzle Adaptor	1
35	736-0760	Lock Washer, 17 x 23.8 x 1.95	2
36	737-04003C	Deck Water Nozzle	2

48" Fabricated Deck Spindle Assembly- Figure 5

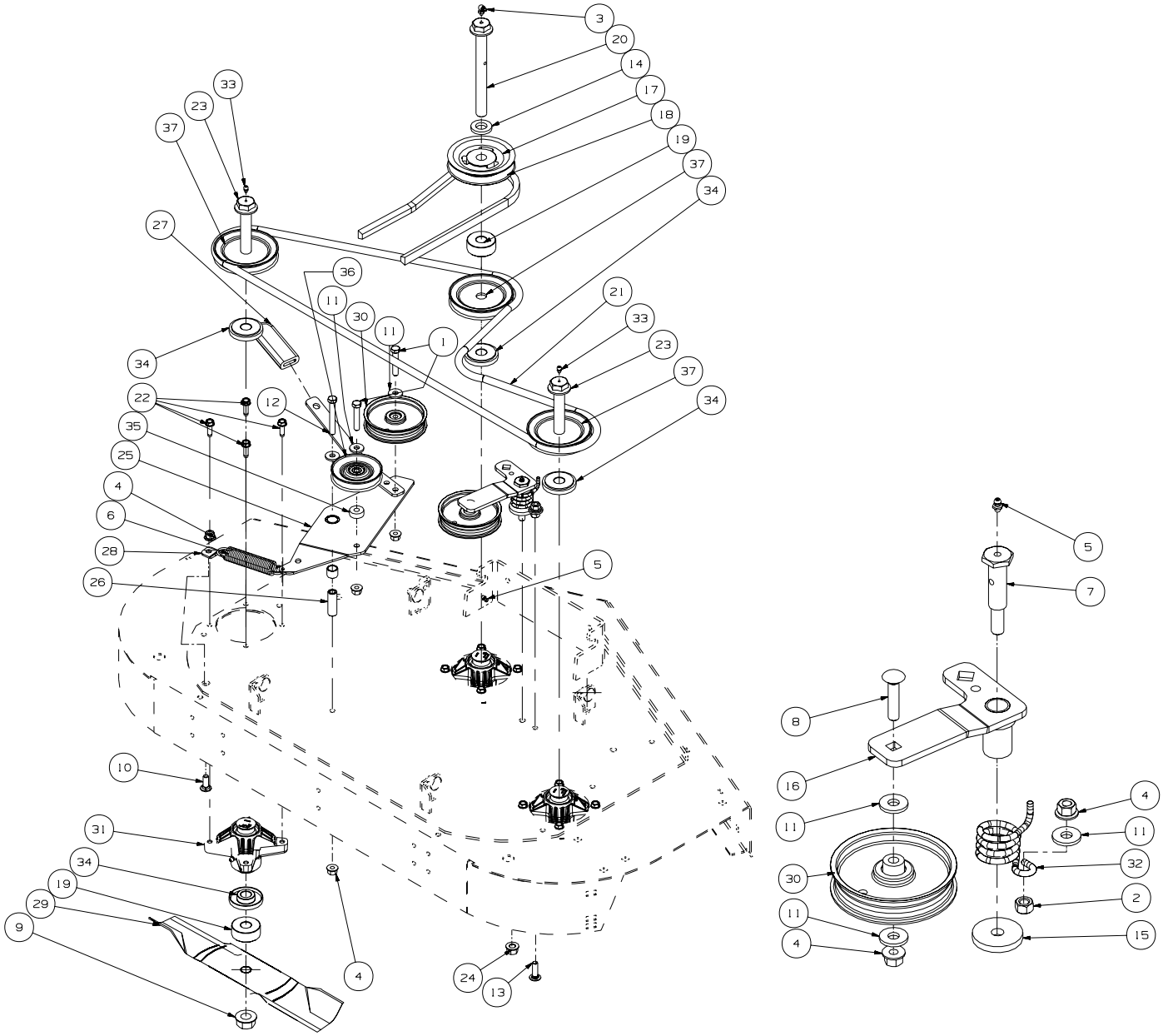

GD: 02004976-11/15/07

48" Fabricated Deck Spindle Assembly- Parts List for Figure 5

Ref. No.	Part No.	Description	Qty.
1	00002528	Hex Cap Screw, 3/8-16 x 2.00	2
2	00006131	Hex Nut 3/8-16	1
3	00012226	Grease Fitting, 90°	1
4	00022560	Hex Nut, 3/8-16 Flange Lock	6
5	00060078	Grease Fitting, 1/4-28 x 3/16	2
6	01000199	Extension Spring, 1.0 OD x 5.00	1
7	01000302	Shoulder Screw, 7/16-14	1
8	01000364	Hex Carriage Screw, 3/8-16, 1.75	1
9	01000380	Hex Flange Nut, 3/4-16	3
10	01000643	Carriage Bolt, 3/8-16 x 1.00	1
11	01000723	Flat Washer, .406 ID x 1.0 OD x .105	6
12	01001371	Hex Cap Screw 3/8-16 x 2.75	1
13	01002010	Carraige Screw, 3/8-16 x 1.25	1
14	01003123	Spacer, .812 ID x .218	1
15	01003269	Flat Washer, 7/16 ID x 1.75 OD	1
16	01005737	Idler Arm Assembly, Deck Spindle includes:	1
	01000308	Bearing	2
17	01005202	V-Pulley, 4.75 OD	1
18	01009787	V-Belt, B-Section	1
19	01010014	Spacer .760 ID x 2.00 OD x 0.790	4
20	02000071	Spindle Bolt, 3/4-16 x 7.155	1
21	02000154	V-Belt, A-Section	1
22	02000762	Self Tapping Screw 5/16-18 x 1.00	12
23	02000819	Spindle Bolt 3/4-16 x 5.37	2
24	02000948	Nut, 7/16-20, FlangeLock	1
25	02003795	Idler Arm Assembly, Double, includes:	1
	01000308	Bearing	2
26	02003640	Spacer, .39 ID x .625 OD x 1.875	1
27	02003740	Grip, 1.0 x 3.2 x .25	1
28	02004195	Tension Spring Bracket	1
29	02005017	Blade, 17.0, Hi-Lift, 0.756 ID	3
30	02005077	Flat Pulley	2
31	618-04426	Spindle Assembly	3
32	732-3067	Idler Torsion Spring	1
33	737-3000	Grease Fitting	2
34	748-3065A	Spindle Spacer	6
35	750-3119	Spacer .406 ID x 1.0 OD	1
36	756-0399	V-Pulley, 3.5 OD	1
37	756-3089	Pulley	3

54" Fabricated Cutter Deck - Figure 6

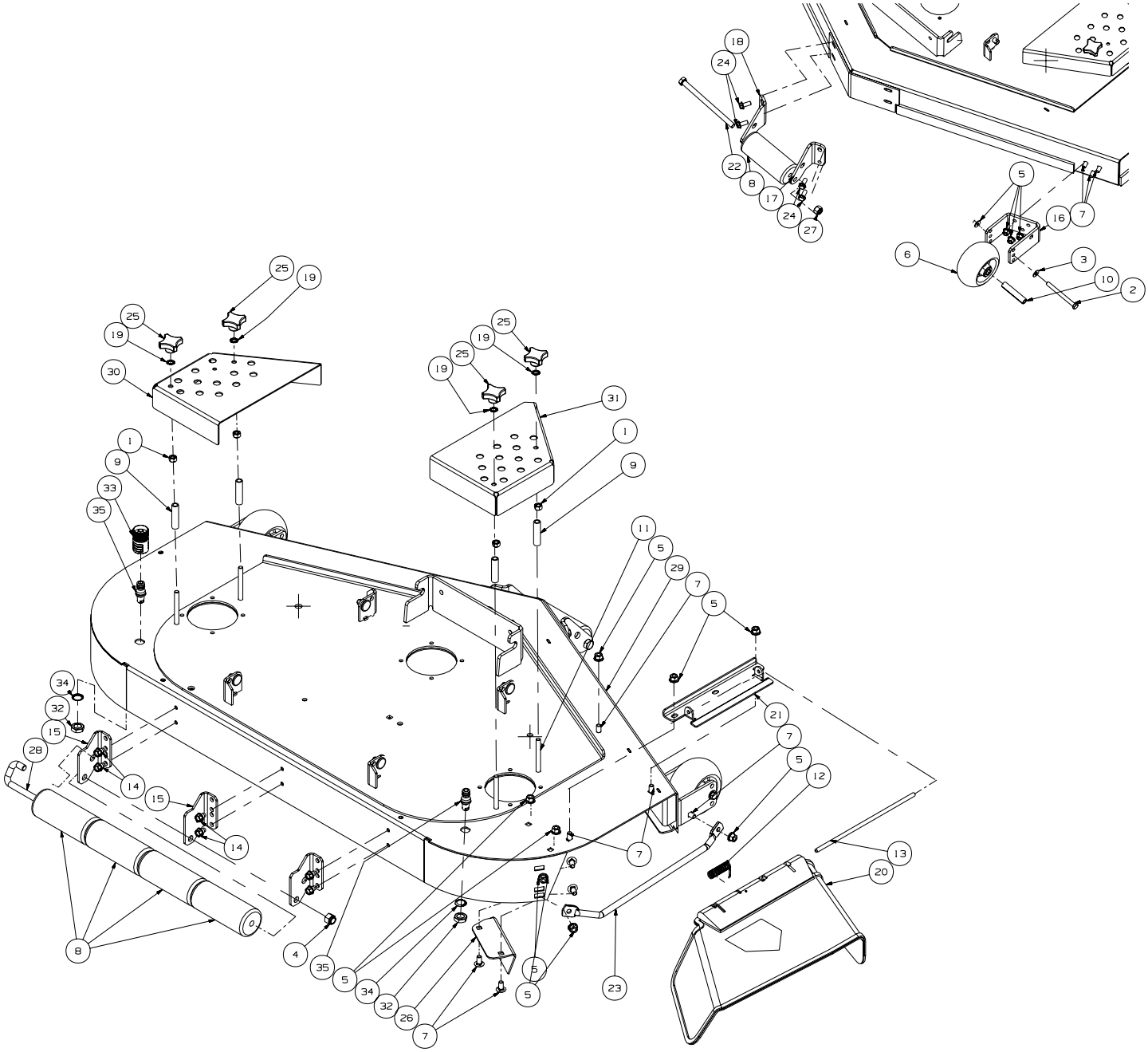

GD: 02005083-10/31/07

54" Fabricated Cutter Deck - Parts List for Figure 6

Ref. No.	Part No.	Description	Qty.
1	00006131	Nut, 3/8-16, Hex	4
2	00011925	Hex Cap Screw, 3/8-16, 3.75	2
3	00012158	Washer	2
4	00012428	Hex Nut, 1/2-13, Insert Lock	1
5	00022560	Hex Nut, 3/8-16 Flange Lock	16
6	01000343	Complete Wheel, 5.00 Dia	2
7	01000372	Carriage Bolt 3/8-16 x .75	14
8	01000385	Front Roller	5
9	01000395	Spacer	4
10	01000398	Wheel Spacer	2
11	01002750	Carriage Bolt, 3/8-16 x 3.50	4
12	01003253	Torsion Spring	1
13	01003254	Chute Deflector Rod	1
14	01004304	Self Tapping Screw, 5/16-18 x 1/2	6
15	01004707	Fabricted Deck Roller Mount Bracket	3
16	01005243	Front Anti-Scalp Wheel Mount Bracket	2
17	01005244	Left Hand Front Roller Mount Bracket	1
18	01005245	Right Hand Front Roller Mount Bracket	1
19	01005851	External Washer, 3/8	4
20	01006693	Deflector Chute	1
21	01006748	Deflector Chute Bracket	1
22	01006961	Hex Cap Screw, 1/2-20 x 7.50	1
23	01008644	Fabricated Deck Finger Guard	1
24	01009243	Self Tapping Screw, 3/8-16 x 0.875	4
25	02000040	Plastic Knob	4
26	02001235	Fabricated Deck, Chute Bracket	1
27	02002299	Lock Nut, Nylon Insert, 1/2-20	1
28	02002799	J-Hook w/ Threaded Roller	1
29	02005232	54 Fabricated Deck Assembly	1
30	02003605	Belt Cover, LH	1
31	02003606	Belt Cover, RH	1
32	712-0641	Hex Nut, M16-1.5	2
33	721-04041	Water Nozzle Adaptor	1
34	736-0760	Lock Washer, 17 x 23.8 x 1.95	2
35	737-04003C	Deck Water Nozzle	2

54" Fabricated Deck Spindle Assembly- Figure 7

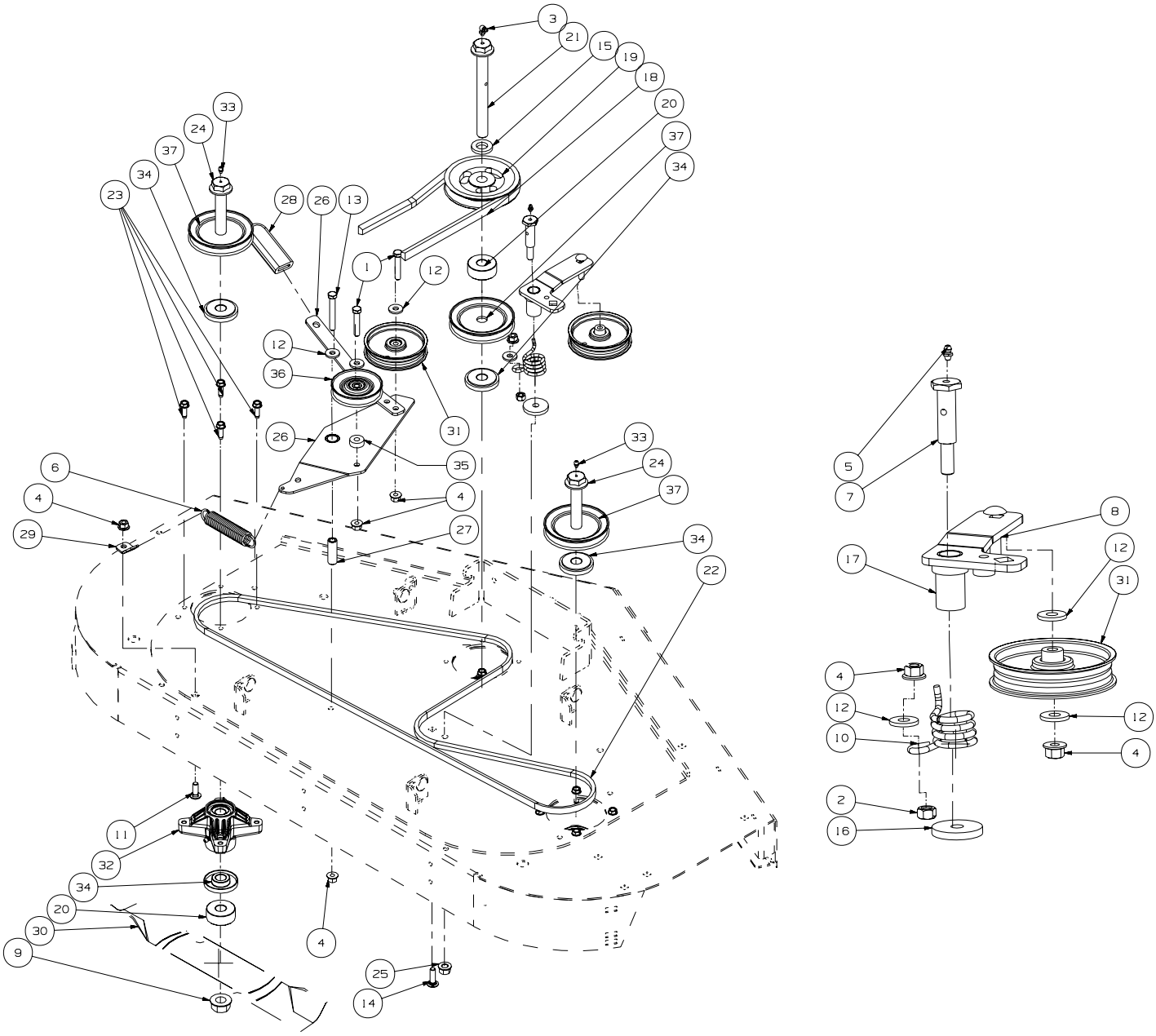

GD: 02004977-11/14/07

54" Fabricated Deck Spindle Assembly- Parts List for Figure 7

Ref. No.	Part No.	Description	Qty.
1	00002528	Hex Cap Screw, 3/8-16 x 2.00	2
2	00006131	Hex Nut 3/8-16	1
3	00012226	Grease Fitting, 90°	1
4	00022560	Hex Nut, 3/8-16 Flange Lock	7
5	00060078	Grease Fitting, 1/4-28 x 3/16	1
6	01000199	Extension Spring, 1.0 OD x 5.00	1
7	01000302	Shoulder Screw, 7/16-14	1
8	01000364	Hex Carriage Screw, 3/8-16, 1.75	1
9	01000380	Hex Flange Nut, 3/4-16	3
10	01000387	Torsion Spring Idler	1
11	01000643	Carriage Bolt, 3/8-16 x 1.00	1
12	01000723	Flat Washer, .406 ID x 1.0 OD x .105	6
13	01001371	Hex Cap Screw 3/8-16 x 2.75	1
14	01002010	Carraige Screw, 3/8-16 x 1.25	1
15	01003123	Spacer, .812 ID x .218	1
16	01003269	Flat Washer, 7/16 ID x 1.75 OD	1
17	01005737	Idler Arm Assembly, Deck Spindle includes:	1
	01000308	Bearing	2
18	01005011	V-Belt, B Section x 83.2	1
19	01005201	V Pulley, 5.25 OD	1
20	01010014	Spacer .760 ID x 2.00 OD x 0.790	4
21	02000071	Spindle Bolt, 3/4-16 x 7.155	1
22	02000653	V-Belt, 1/2 x 91 LG	1
23	02000762	Self Tapping Screw 5/16-18 x 1.00	12
24	02000819	Spindle Bolt 3/4-16 x 5.37	2
25	02000948	Nut, 7/16-20, FlangeLock	1
26	02003795	Idler Arm Assembly, Double, includes:	1
	01000308	Bearing	2
27	02003640	Spacer, .39 ID x .625 OD x 1.875	1
28	02003740	Grip, 1.0 x 3.2 x .25	1
29	02004195	Tension Spring Bracket	1
30	02005018	Blade, 19.0, Hi-Lift, 0.756 ID	3
31	02005077	Flat Pulley	2
32	618-04426	Spindle Assembly	3
33	737-3000	Grease Fitting	2
34	748-3065A	Spindle Spacer	6
35	750-3119	Spacer .406 ID x 1.0 OD	1
36	756-0399	V-Pulley, 3.5 OD	1
37	756-3089	Pulley	3

Control Assembly - Figure 8 and Parts List

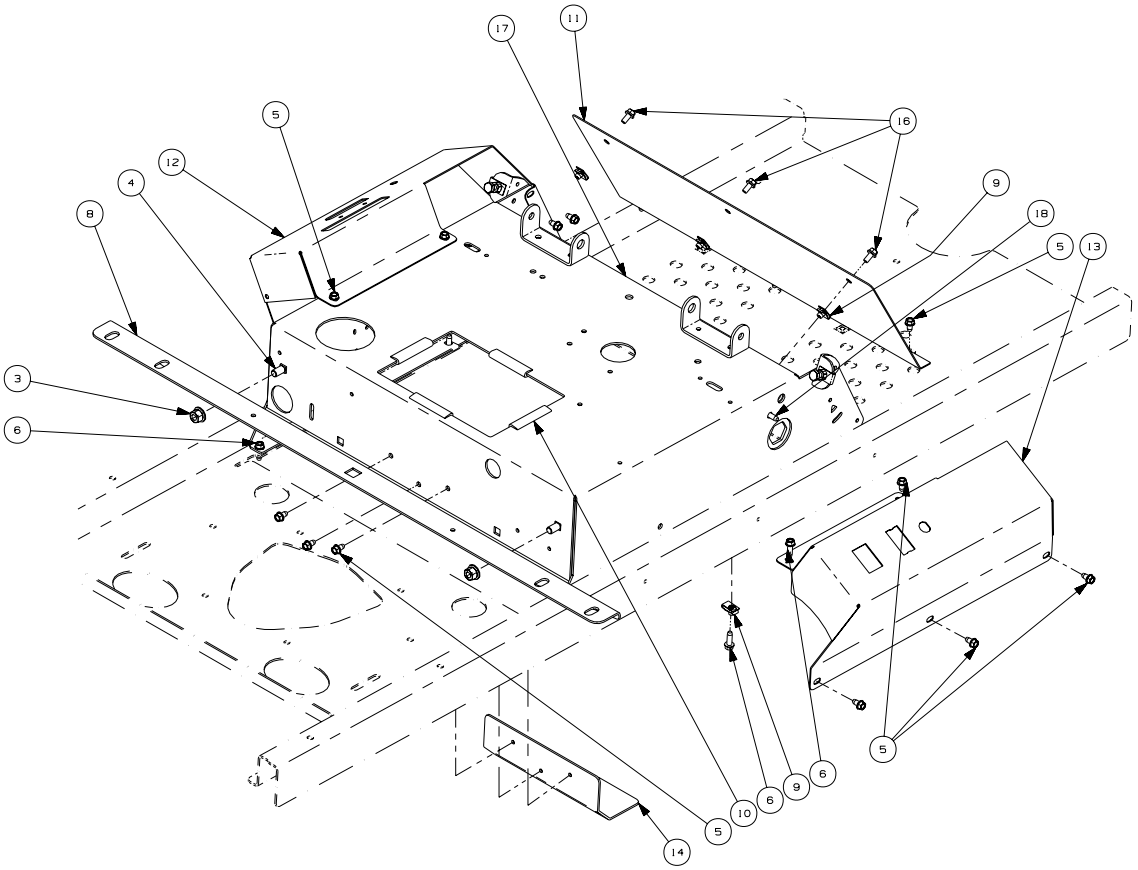

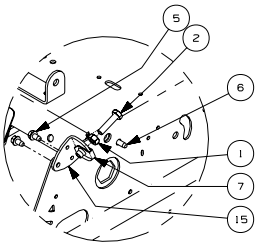

DETAIL A
SCALE 1/8

GD: 02002756-05/15/07

Ref. No.	Part No.	Description	Qty.
1	00012166	Hex Nut, 5/16-18	2
2	00013116	HHCS, 5/16-18 x 1-1/4	2
3	00022560	Hex Nut, 3/8-16 Flange Lock	2
4	01000372	Carriage Bolt, 3/8-16	2
5	01000628	Screw, 1/4-20 x 1/2	19
6	01000629	Self Tapping Screw, 1/4-20 x .75	5
7	01003563	U-Nut, 5/16-18	2
8	01008490	Front Tank Mounting Bracket	1
9	01008539	U-Nut, 1/4-20	5
10	01008572	Battery Edge Trim	4
11	02002456	Front Panel	1
12	02002735	Left Hand Control Console	1
13	02002736	Right Hand Control Console	1
14	02002744	Battery Bracket	1
15	02002761	Forward/Reverse Stop Bracket	2
16	02003812	Screw, 1/4-20 x 1/2	3
17	02004348	Control Housing Weldment	1
18	01008620	Self Tapping Screw 5/16-18 x .750	2

Brake Assembly - Figure 9 and Parts List

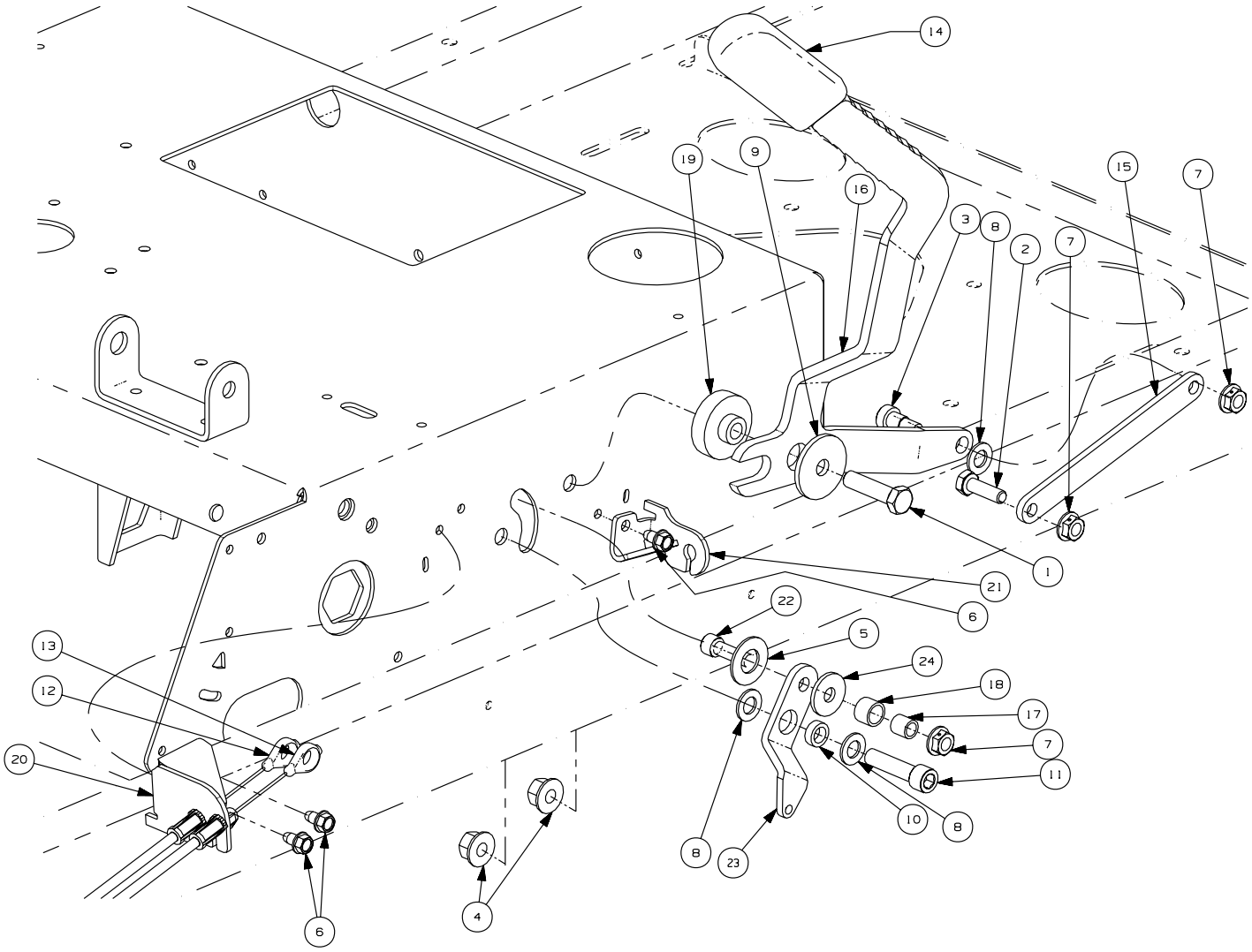

GD: 02004047-04/16/07

Ref. No.	Part No.	Description	Qty.	Ref. No.	Part No.	Description	Qty.
1	00010980	Hex Head Cap Screw, 3/8-16 x 1.50	1	13	02003729	Right Hand Brake Cable	1
2	00012180	Hex Head Cap Screw, 5/16-18 x 1.00	1	14	02003740	Parking Brake Grip	1
3	00013733	Shoulder Bolt, 3/8 x 3/8	1	15	02003831	Brake Link Plate	1
4	00022560	Hex Nut, 3/8-16 Flange Lock	2	16	02003832	Brake Handle	1
5	01000101	Slide Washer	1	17	02003839	Spacer, .322 ID x .438 OD x .44	1
6	01000628	Screw, TT, 1/4-20, 0.5, Hex Index Washer	3	18	02003840	Spacer, .442 ID x .563 OD x .405	1
7	01000635	Nut, 5/16-18, Flange Lock	3	19	02004045	Step Hub, .379 x 1.5 x .257/.400	1
8	01002710	Washer, .375 x .738 x .063	3	20	02004122	Brake Cable Mounting Bracket	1
9	01009253	Flat Washer, .390 x 1.5 x .134	1	21	02004123	Brake Cable Mounting Bracket	1
10	02002885	Spacer, .380 x .563 x .196	1	22	02004124	Sockethead Capscrew, 5/16-18 x 1.00	1
11	02003717	Sockethead Capscrew, 3/8-16 x 1.50	1	23	02004174	Lockout Lever Plate	1
12	02003728	Left Hand Brake Cable	1	24	736-3089	Washer, .345 x 1.00 x .100	1

44" Front Caster & Tire Assembly - Figure 10 and Parts List

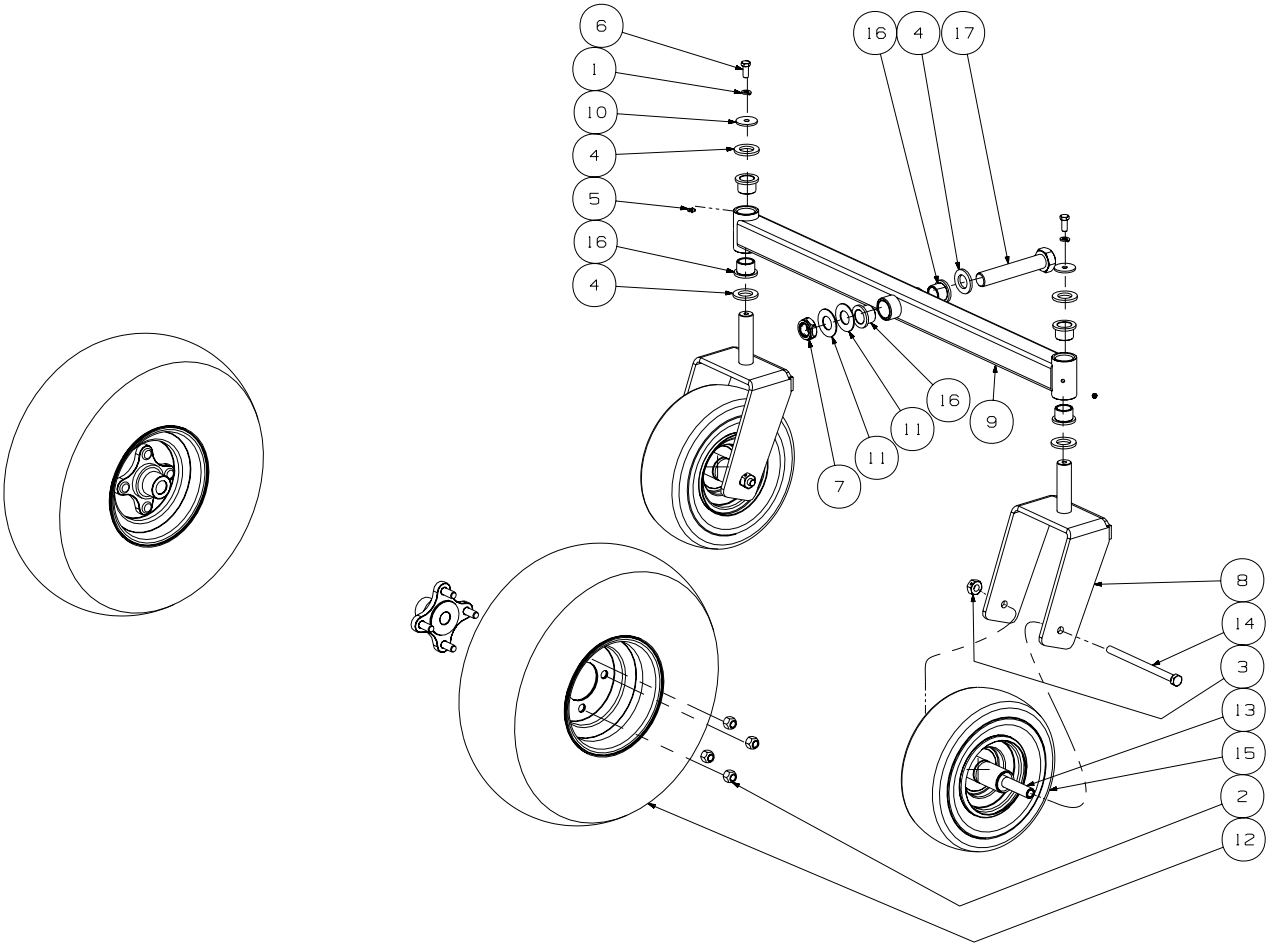

GD: 02005265-10/04/07

Ref. No.	Part No.	Description	Qty.
1	00012157	Lock Washer, 3/8 Zinc	2
2	00012187	Lug Nut, 1/2-20	8
3	02002299	Lock Nut, Nylon Insert, 1/2-20	2
4	00023822	Washer Special	5
5	00060078	Grease Fitting, 1/4-28 x 3/16	2
6	01000368	Hex Cap Screw, 3/8-16 x .88	2
7	01000678	Nut Jam, 1.0-14, Nylon Insert	1
8	02005001	Castor Wheel Mounting Bracket	2
9	01008384	Front Axle Assembly	1
10	01009253	Flat Washer, .390 x 1.5 x .134	2
11	02000588	Flat Washer, 1.00 ID x 2.25 OD x ,075	2
12	02000966	Wheel Assembly, 20 x 8-10 NHS	2
13	02002153	Wheel Spacer	2
14	01006961	Hex Cap Screw, 1/2-20 x 7.50	2
15	02002956	Wheel Assembly 11 x 6.00 - 5, Beige	2
16	02003599	Flange Bearing, 1.001 x 1.25	6
17	02003804	Hex Cap Screw, 1-14 x 5.5	1

48" Front Caster & Tire Assembly - Figure 11 and Parts List

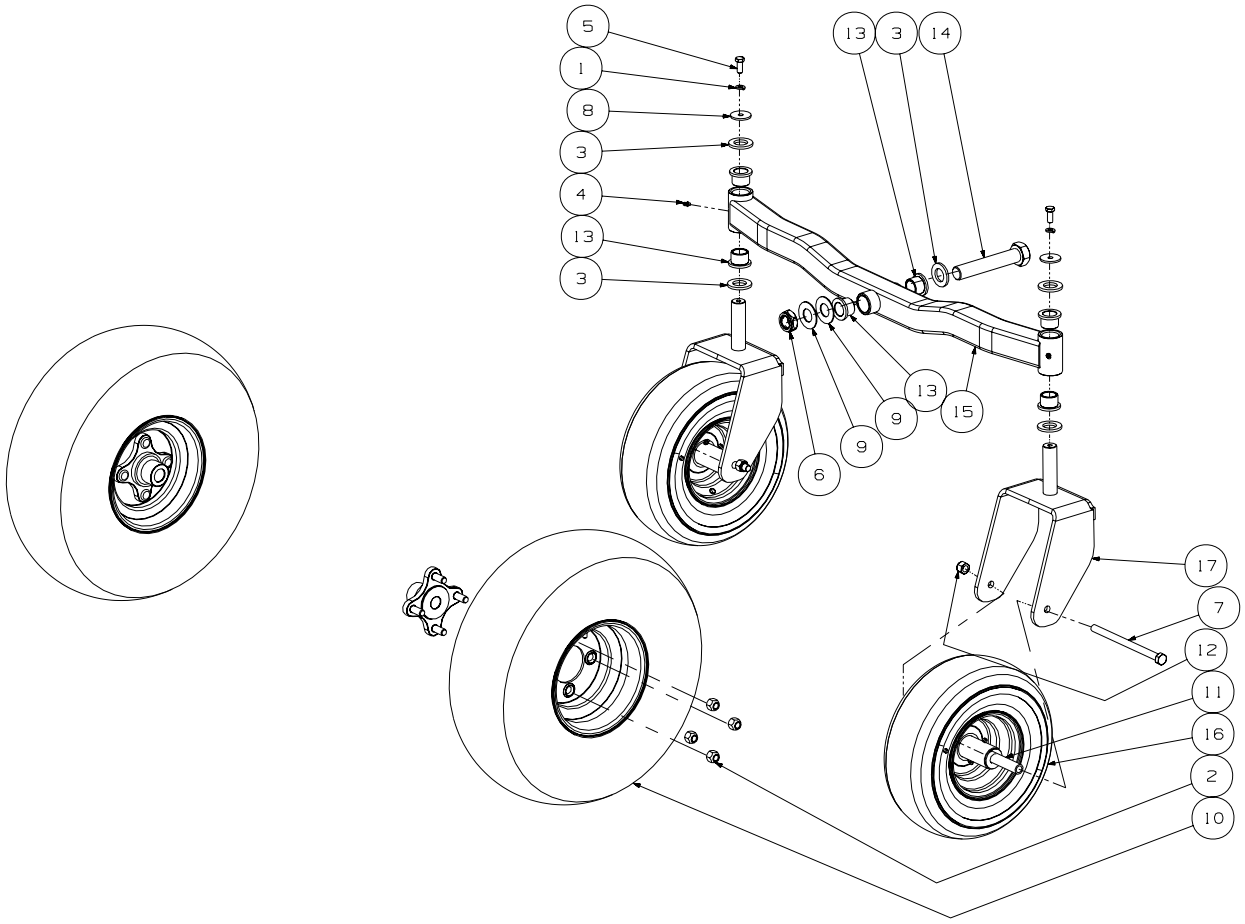

GD: 02004996-10/04/07

Ref. No.	Part No.	Description	Qty.
1	00012157	Lock Washer, 3/8 Zinc	2
2	00012187	Lug Nut, 1/2-20	8
3	00023822	Washer Special	5
4	00060078	Grease Fitting, 1/4-28 x 3/16	2
5	01000368	Hex Cap Screw, 3/8-16 x .88	2
6	01000678	Nut Jam, 1.0-14, Nylon Insert	1
7	01006961	Hex Cap Screw, 1/2-20 x 7.50	2
8	01009253	Flat Washer, .390 x 1.5 x .134	2
9	02000588	Flat Washer, 1.00 ID x 2.25 OD x ,075	2
10	02000966	Wheel Assembly, 20 x 8-10 NHS	2
11	750-04775	Wheel Spacer	2
12	02002299	Lock Nut, Nylon Insert, 1/2-20	2
13	02003599	Flange Bearing, 1.001 x 1.25	6
14	02003804	Hex Cap Screw, 1-14 x 5.5	1
15	02004600	Front Axle Assembly	1
16	02005000	Wheel Assembly 13 x 5.00-6	2
17	02005001	Castor Wheel Mounting Bracket	2

54" Front Caster & Tire Assembly - Figure 12 and Parts List

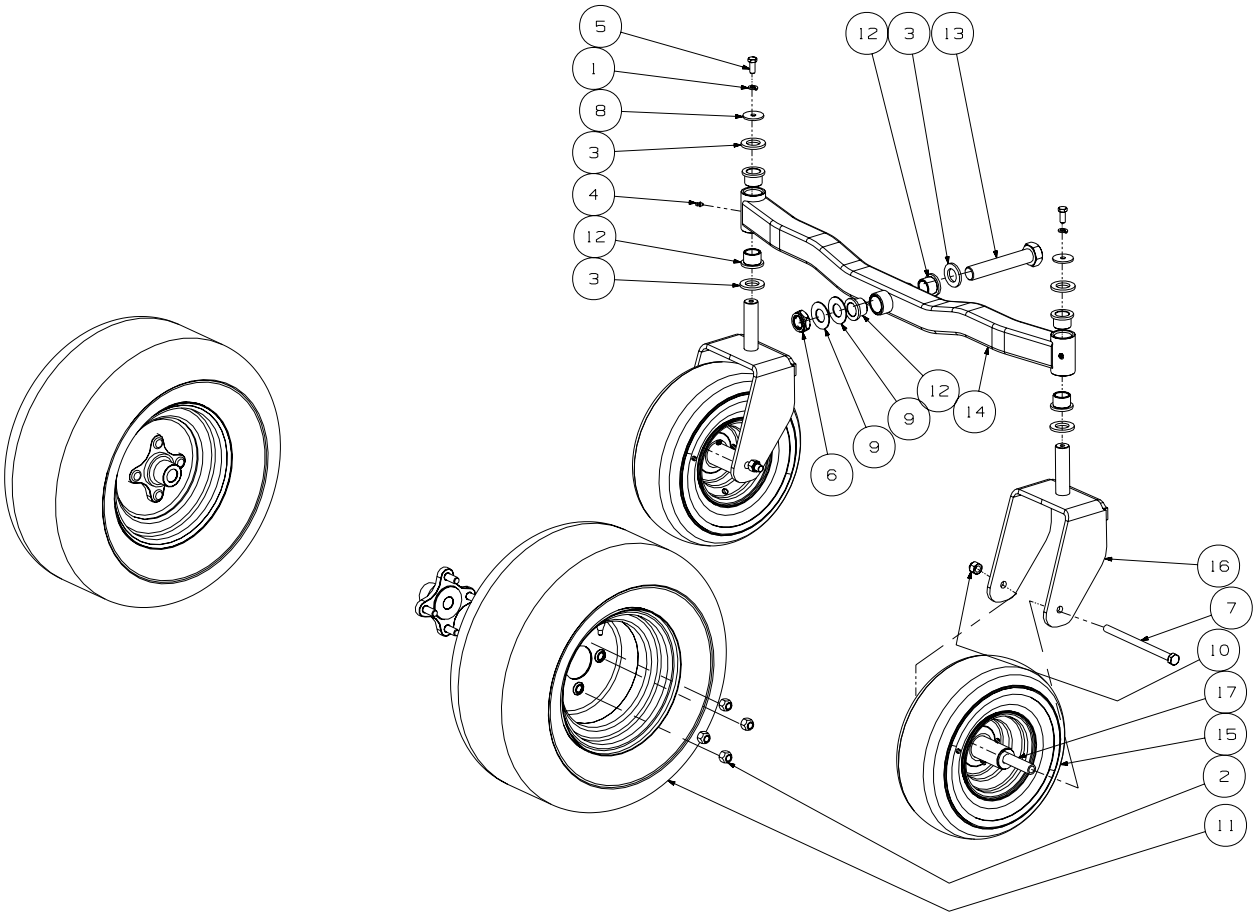

GD: 02004997-10/04/07

Ref. No.	Part No.	Description	Qty.
1	00012157	Lock Washer, 3/8 Zinc	2
2	00012187	Lug Nut, 1/2-20	8
3	00023822	Washer Special	5
4	00060078	Grease Fitting, 1/4-28 x 3/16	2
5	01000368	Hex Cap Screw, 3/8-16 x .88	2
6	01000678	Nut Jam, 1.0-14, Nylon Insert	1
7	01006961	Hex Cap Screw, 1/2-20 x 7.50	2
8	01009253	Flat Washer, .390 x 1.5 x .134	2
9	02000588	Flat Washer, 1.00 ID x 2.25 OD x ,075	2
10	02002299	Lock Nut, Nylon Insert, 1/2-20	2
11	02003490	Wheel Assembly, 20 x 10.00 x 10	2
12	02003599	Flange Bearing, 1.001 x 1.25	6
13	02003804	Hex Cap Screw, 1-14 x 5.5	1
14	02004600	Front Axle Assembly	1
15	02005000	Wheel Assembly 13 x 5.00 - 6, Beige	2
16	02005001	Castor Wheel Mounting Bracket	2
17	750-04775	Wheel Spacer	2

Steering Assembly -Figure 13 and Parts List

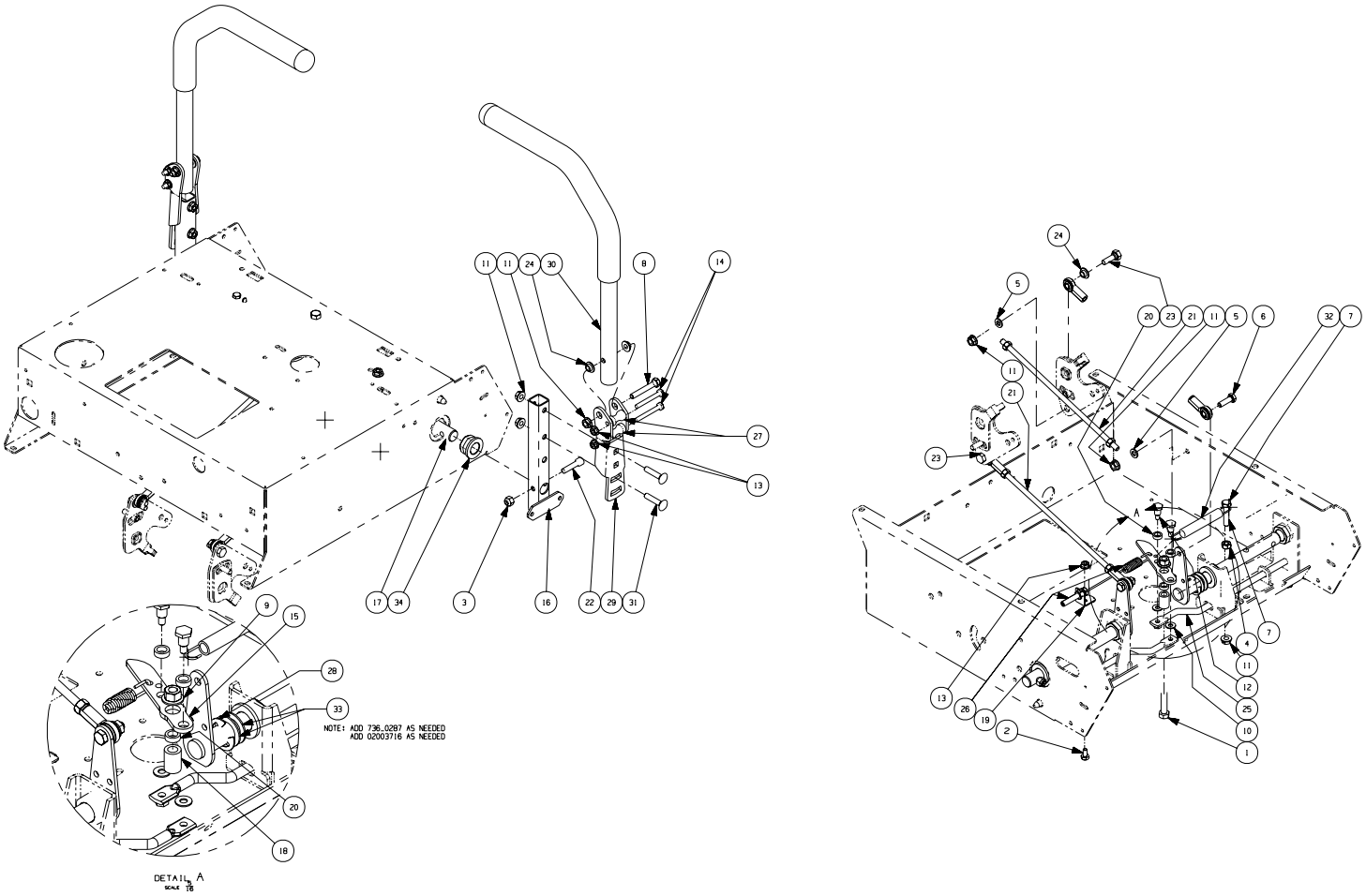

GD: 02005080-10/03/07

Ref. No.	Part No.	Description	Qty.	Ref. No.	Part No.	Description	Qty.
1	00011438	Hex Cap Screw, 3/8-16 x 1-1/2	1	19	02002864	Brake Cable Mounting Bracket	1
2	00012133	Hex Cap Screw, 1/4-20 x 1/2	1	20	02002885	Spacer, .380 x .563 x .196	3
3	00012165	Nylock Nut, 5/16-18	2	21	02002992	Steering Link Rod	2
4	00012166	Hex Nut, 5/16-18	1	22	02002994	Socket Head Capscrew, 5/16-18 x 1.25	2
5	00012169	Flat Washer, 5/16	4	23	00013116	HHCS, 5/16-18 x 1-1/4	2
6	00012180	Hex Head Cap Screw, 5/16-18 x 1.00	2	24	02003419	Bushing, .310 x .172 x .688 x .06	6
7	00012382	Hex Cap Screw, 5/16-18 x 1-1/2	1	25	02003560	Control Lock Rod	2
8	00013198	Hex Cap Screw, 5/16-18 x 2.00	2	26	02003568	Control Cable Lock Out	1
9	00022560	Nut, Flange Lock, 3/8-16	1	27	02003644	Spacer, .25 ID x .38 OD x 1.13	4
10	01000600	Flat Washer, 1.4 x .630 x .0515	2	28	02003716	Retainer Ring, E-Clip	2
11	01000635	Nut, 5/16-18, Lock	11	29	02003853	Lapbar Pivot Bracket	2
12	01001919	Shoulder Screw, 1/4-28	2	30	02003855	Lapbar Assembly includes:	2
13	01002766	Nut, 1/4-20, Hex Flange Lock Nut	6		02002662	Grip, 1.0	
14	01006898	Hex Cap Screw, 1/4-20 x 2.00	4	31	710-0262	Carriage Bolt, 5/16-18 x 1.50	4
15	02002684	Brake Lever Plate	1	32	732-0470A	Extension Spring, .53 OD x 4.7	1
16	02002687	Pivot Bracket Weldment	2	33	736-0287	Flat Washer, .793 ID x 1.24 OD x .060	4
17	02002723	Steering Input Shaft Assembly	2	34	741-0598	Hex Flange Bearing, .752 ID	4
18	02002844	Spacer, .385 ID x .625 OD x .869	1				

Drive Train Assembly- Figure 14 and Parts List

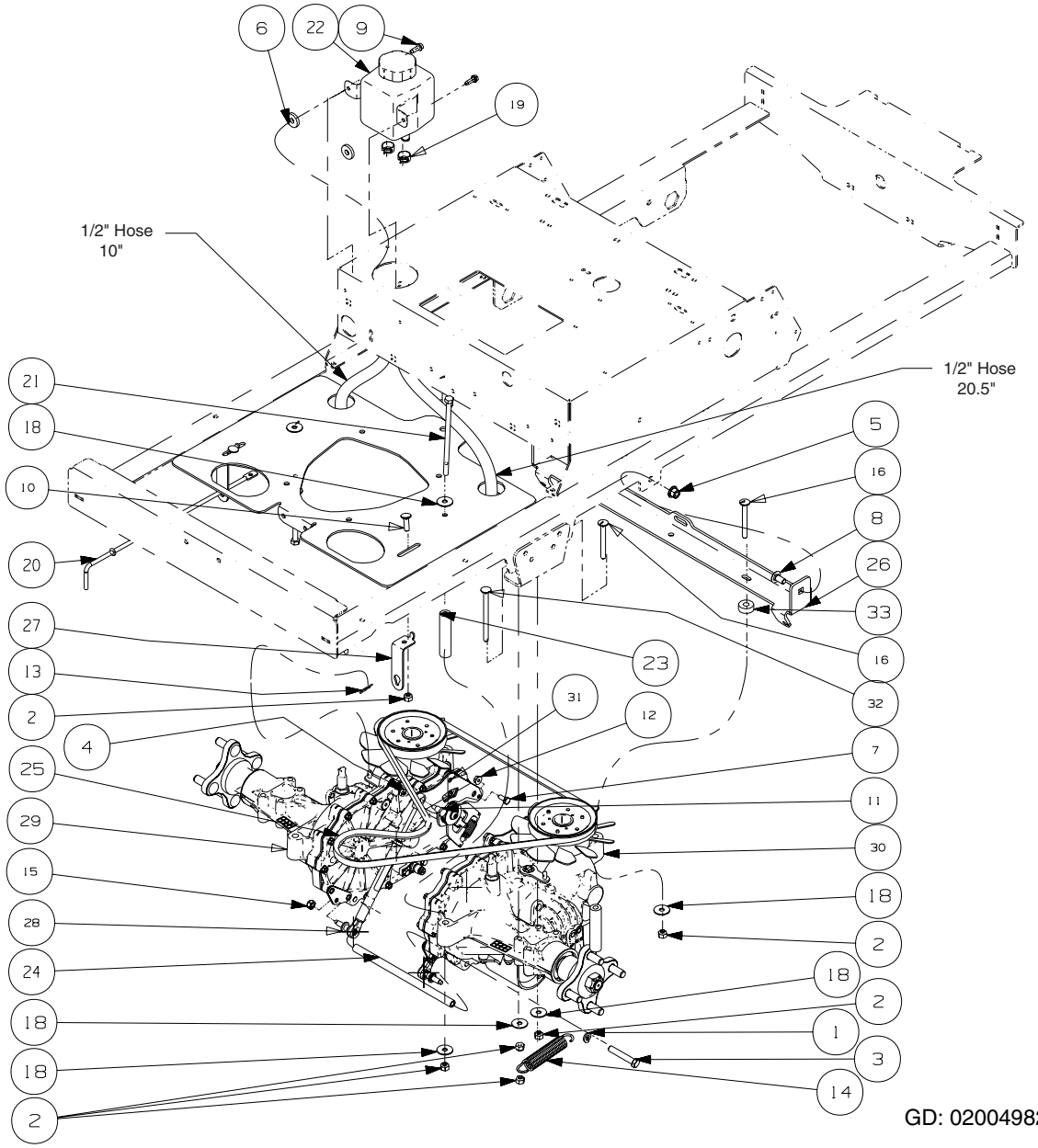

Ref. No.	Part No.	Description	Qty.	Ref. No.	Part No.	Description	Qty.
1	00012157	Lock Washer, 3/8 Zinc	2	19	02001111	Hose Clamp	4
2	00012165	Nylock Nut, 5/16-18	12	20	02001332	Pump Rod	2
3	00012172	Hex Cap Screw, 3/8-16 x 2.00	2	21	02001556	Hex Cap Screw, 5/16-18 x 6.00	2
4	00014081	Nut, 1/4-28, SS, Nylon Insert	2	22	02001578	Hydraulic Tank	1
5	00022560	Nut, Flange Lock, 3/8-16	2	23	02002646	Spacer, .375 ID x .75 OD x 3.30	2
6	00083192	Idler Washer	2	24	02002647	Transmission Support Tube	1
7	01000338	Hex Cap Screw 1/4-20 x .620	2	25	02002648	V-Belt, 58.4	1
8	01000372	Carriage Bolt, 3/8-16	2	26	02002679	Transmission Front Mounting Bracket	1
9	01000629	Self Tapping Screw, 1/4-20 x .75	2	27	02002965	Neutral Bracket	2
10	01000641	Carriage Bolt, 5/16-18 x 1.00	2	28	02003622	Cylinder Return to Neutral	2
11	01001919	Shoulder Screw, 1/4-28	2	29	02004676	IZT Transmission, Left Hand	1
12	01002766	Nut, 1/4-20, Hex Flange Lock Nut	2		02002150	Filter	1
13	01002771	Cotter Pin, .072 x 1.12 Lg	2	30	02004677	IZT Transmission, Right Hand	1
14	01002874	Extension Spring, .865 OD x 4.68 Long	2		02002150	Filter	1
15	01003561	Nut, Hex, Center Lock, M8	2	31	02004681	Return to Neutral Bracket	2
16	01005340	Carriage Bolt, 5/16-18 x 2.75	4	32	02005326	Carriage Bolt, 5/16-18 x 4.00	2
17	--	Fuel Hose, .50 ID x .75 OD (in inches)	30.5	33	750-3119	Spacer .406 ID x 1.0 OD	2
18	01009937	Washer, 5/16 x 1.06	10				

20HP Kohler Engine Assembly - Figure 15 and Parts List

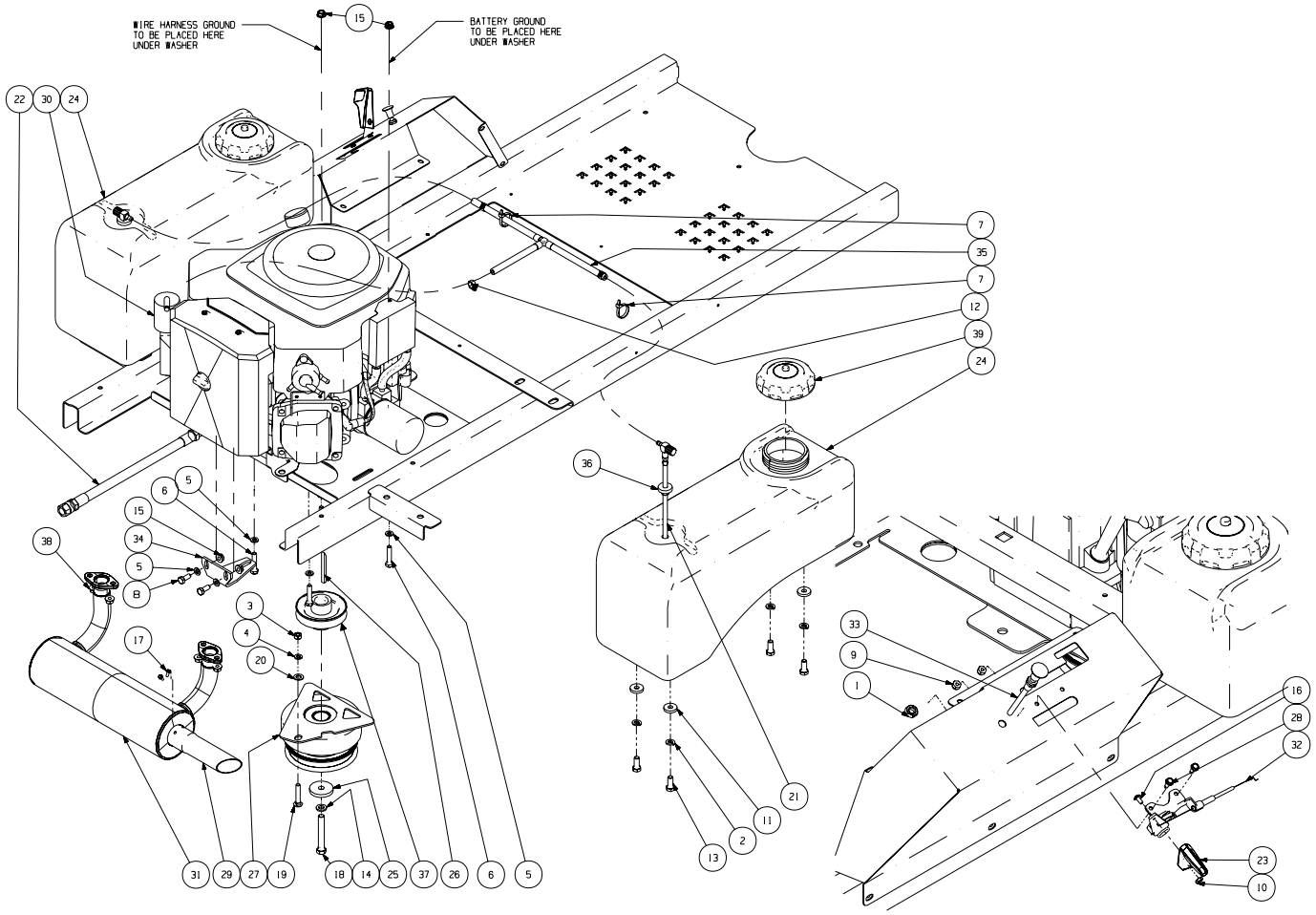

GD: 02005095-11/06/07

Ref No	Part No.	Description	Qty.	Ref No	Part No.	Description	Qty.
1	00011453	Jam Nut, 3/8-24	1	22	01003283	Oil Drain Extension Hose	1
2	00012157	Lock Washer, 3/8 Zinc	8	23	01004004	Throttle Control Knob	1
3	00012166	Hex Nut, 5/16-18	1	24	01004350	Fuel Tank	2
4	00012168	Lock Washer, 5/16	1	25	01005314	Flat Washer, 7/16 ID x 1.75 OD x .250	1
5	00012169	Flat Washer, 5/16	6	26	01007533	Key, 1/4 x 1/4 x 2.75	1
6	00012382	HHCS, 5/16-18, 1-1/2	4	27	01008434	Ogura DX11 Electric Clutch	1
7	00012470	Cable Tie, 3/16 x .05 x 7.4	2	28	01008531	Screw, #10-32 x 0.500	2
8	00013406	Hex Cap Screw, 5/16-18 x .75	2	29	01008623	Exhaust Pipe	1
9	00014608	Lock Nut, Nylon Insert, 10-32	2	30	02000426	20HP Kohler Engine	1
10	00060056	Nut, w/ Star Washer	1	31	02000456	Muffler, Silexsys	1
11	00083192	Idler Washer	8	32	02000477	Throttle Control Cable	1
12	01000215	Hose Clamp, SAE #4: 1/4-5/8, SS	1	33	02000478	Choke Cable	1
13	01000368	Hex Cap Screw, 3/8-16 x .88	8	34	02001992	Clutch Retainer Assembly	1
14	01000389	Lock Washer, 7/16	1	35	02002164	Fuel Hose Assembly includes:	1
15	01000635	Lock Nut, Hex Flange, 5/16-18	6		--	Hose, 1/4" Fuel Line (in inches)	70
16	01000721	Machine Screw, 8-32 x .375	1		00012235	Clamp, Union	5
17	01000811	Screw, 8-32 x .375, Hex Washer	2		01003473	Tee Fitting, Fuel	1
18	01000813	Hex Cap Screw, 7/16-20 x 3.0	1	36	02002253	Fuel Tank Groment	2
19	01000956	Carriage Bolt, 5/16-18 x 1.75	1	37	02003417	Transmission Drive Pulley	1
20	01002710	Washer, 3/8 x .738 x .063	1	38	02003984	Nut, M8-1.25, Hex Flange	4
21	01003116	Fuel Pickup Fitting	2	39	751-3124D	Fuel Cap	2

22HP Kohler Engine Assembly - Figure 16 and Parts List

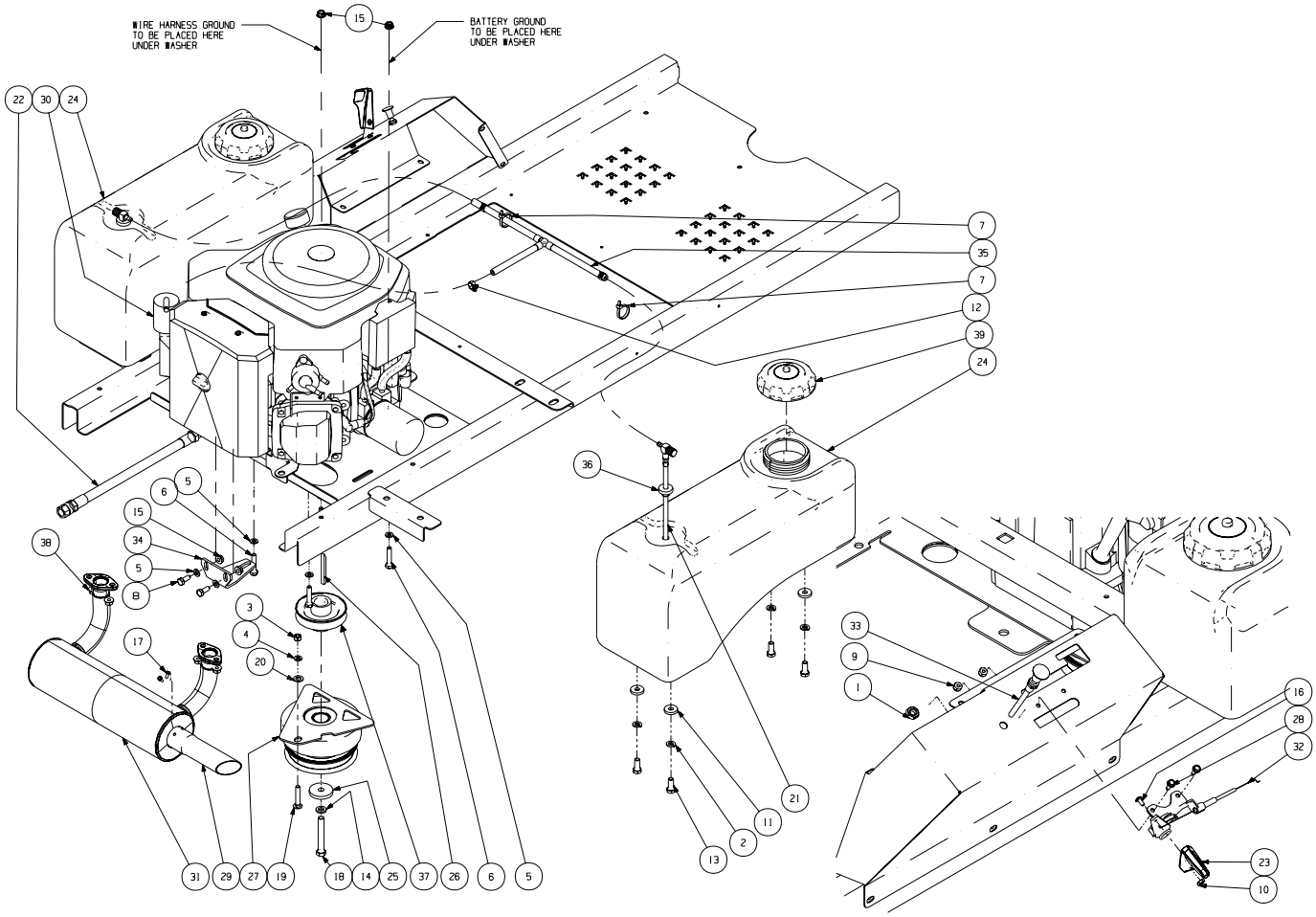

GD: 02005094-11/06/07

Ref No	Part No.	Description	Qty.	Ref No	Part No.	Description	Qty.
1	00011453	Jam Nut, 3/8-24	1	22	01003283	Oil Drain Extension Hose	1
2	00012157	Lock Washer, 3/8 Zinc	8	23	01004004	Throttle Control Knob	1
3	00012166	Hex Nut, 5/16-18	1	24	01004350	Fuel Tank	2
4	00012168	Lock Washer, 5/16	1	25	01005314	Flat Washer, 7/16 ID x 1.75 OD x .250	1
5	00012169	Flat Washer, 5/16	6	26	01007533	Key, 1/4 x 1/4 x 2.75	1
6	00012382	HHCS, 5/16-18, 1-1/2	4	27	01008434	Ogura DX11 Electric Clutch	1
7	00012470	Cable Tie, 3/16 x .05 x 7.4	2	28	01008531	Screw, #10-32 x 0.500	2
8	00013406	Hex Cap Screw, 5/16-18 x .75	2	29	01008623	Exhaust Pipe	1
9	00014608	Lock Nut, Nylon Insert, 10-32	2	30	02005088	22HP Kohler Engine	1
10	00060056	Nut, w/ Star Washer	1	31	02000456	Muffler, Silexsys	1
11	00083192	Idler Washer	8	32	02000477	Throttle Control Cable	1
12	01000215	Hose Clamp, SAE #4: 1/4-5/8, SS	1	33	02000478	Choke Cable	1
13	01000368	Hex Cap Screw, 3/8-16 x .88	8	34	02001992	Clutch Retainer Assembly	1
14	01000389	Lock Washer, 7/16	1	35	02002164	Fuel Hose Assembly includes:	1
15	01000635	Lock Nut, Hex Flange, 5/16-18	6		--	Hose, 1/4" Fuel Line (in inches)	70
16	01000721	Machine Screw, 8-32 x .375	1		00012235	Clamp, Union	5
17	01000811	Screw, 8-32 x .375, Hex Washer	2		01003473	Tee Fitting, Fuel	1
18	01000813	Hex Cap Screw, 7/16-20 x 3.0	1	36	02002253	Fuel Tank Groment	2
19	01000956	Carriage Bolt, 5/16-18 x 1.75	1	37	02003417	Transmission Drive Pulley	1
20	01002710	Washer, 3/8 x .738 x .063	1	38	02003984	Nut, M8-1.25, Hex Flange	4
21	01003116	Fuel Pickup Fitting	2	39	751-3124D	Fuel Cap	2

23HP Kohler Engine Assembly - Figure 17 and Parts List

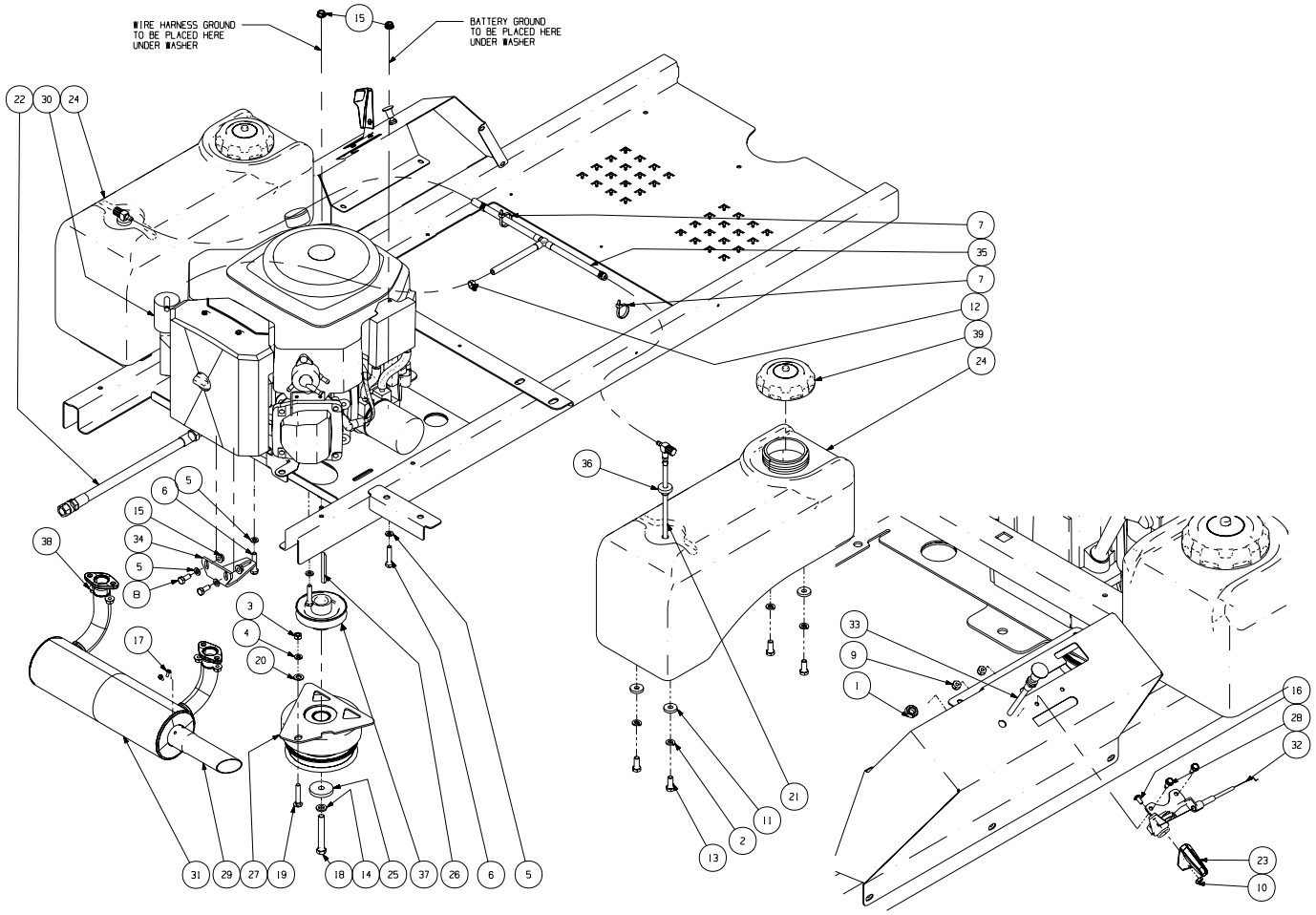

GD: 02005093-11/06/07

Ref No	Part No.	Description	Qty.	Ref No	Part No.	Description	Qty.
1	00011453	Jam Nut, 3/8-24	1	22	01003283	Oil Drain Extension Hose	1
2	00012157	Lock Washer, 3/8 Zinc	8	23	01004004	Throttle Control Knob	1
3	00012166	Hex Nut, 5/16-18	1	24	01004350	Fuel Tank	2
4	00012168	Lock Washer, 5/16	1	25	01005314	Flat Washer, 7/16 ID x 1.75 OD x .250	1
5	00012169	Flat Washer, 5/16	6	26	01007533	Key, 1/4 x 1/4 x 2.75	1
6	00012382	HHCS, 5/16-18, 1-1/2	4	27	01008434	Ogura DX11 Electric Clutch	1
7	00012470	Cable Tie, 3/16 x .05 x 7.4	2	28	01008531	Screw, #10-32 x 0.500	2
8	00013406	Hex Cap Screw, 5/16-18 x .75	2	29	01008623	Exhaust Pipe	1
9	00014608	Lock Nut, Nylon Insert, 10-32	2	30	02000427	20HP Kohler Engine	1
10	00060056	Nut, w/ Star Washer	1	31	02000456	Muffler, Silexsys	1
11	00083192	Idler Washer	8	32	02000477	Throttle Control Cable	1
12	01000215	Hose Clamp, SAE #4: 1/4-5/8, SS	1	33	02000478	Choke Cable	1
13	01000368	Hex Cap Screw, 3/8-16 x .88	8	34	02001992	Clutch Retainer Assembly	1
14	01000389	Lock Washer, 7/16	1	35	02002164	Fuel Hose Assembly includes:	1
15	01000635	Lock Nut, Hex Flange, 5/16-18	6		--	Hose, 1/4" Fuel Line (in inches)	70
16	01000721	Machine Screw, 8-32 x .375	1		00012235	Clamp, Union	5
17	01000811	Screw, 8-32 x .375, Hex Washer	2		01003473	Tee Fitting, Fuel	1
18	01000813	Hex Cap Screw, 7/16-20 x 3.0	1	36	02002253	Fuel Tank Groment	2
19	01000956	Carriage Bolt, 5/16-18 x 1.75	1	37	02003417	Transmission Drive Pulley	1
20	01002710	Washer, 3/8 x .738 x .063	1	38	02003984	Nut, M8-1.25, Hex Flange	4
21	01003116	Fuel Pickup Fitting	2	39	751-3124D	Fuel Cap	2

Electrical Assembly - Figure 18 and Parts List

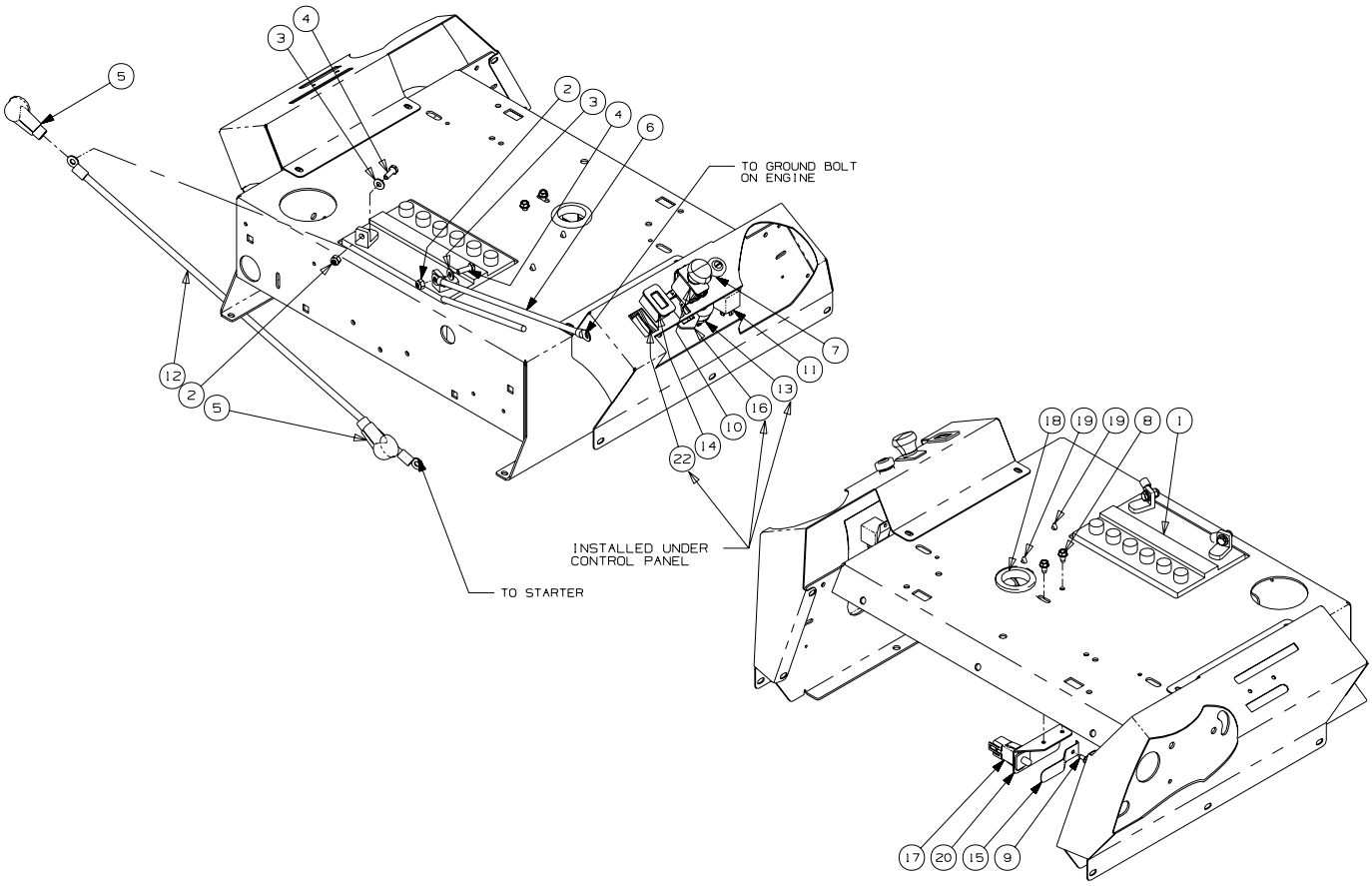

GD: 02005092-09/07/07

Ref. No.	Part No.	Description	Qty.	Ref. No.	Part No.	Description	Qty.
1	00012032	Battery, 12V 225CCA 30Min	1	12	01002252	Cable, Battery, Red, 24"	1
2	00012152	Lock Nut, Nylon Insert, 1/4-20	2	13	01003581	Switch, Ignition, 6 Pin	1
3	00012154	Flat Washer, 1/4	2	14	01007597	Hour Meter includes:	1
4	00013131	Hex Cap Screw, 1/4-20 x .75	2		02004259	Clip	1
5	00013258	Boot, 1" OD Rubber Battery-PST Red	2	15	01008042	Safety Switch Retainer Spring	1
6	00024233	Cable, Battery, Black, 17"	1	16	01009905	PTO Switch Bracket	1
7	00032097	Nut, 5/8-32, w/Cap	1	17	02000024	Switch, Safety N.O./N.C.	1
8	01000628	Self Tapping Screw, 1/4-20 x 1/2	2	18	02001134	Grommet, 1.5 ID x 2.13 OD	1
9	01001864	Self Tapping Screw, 10-32 x 1/2	1	19	02003038	Electrical Conduit Clip, 3/8	2
10	01002111	Electric PTO Switch	1	20	02003596	Brake Switch Mounting Bracket	1
11	01002251	Relay, 12V 40A	1	21	02003651	Harness Assembly (not shown)	1

Seat Assembly - Figure 19 and Parts List

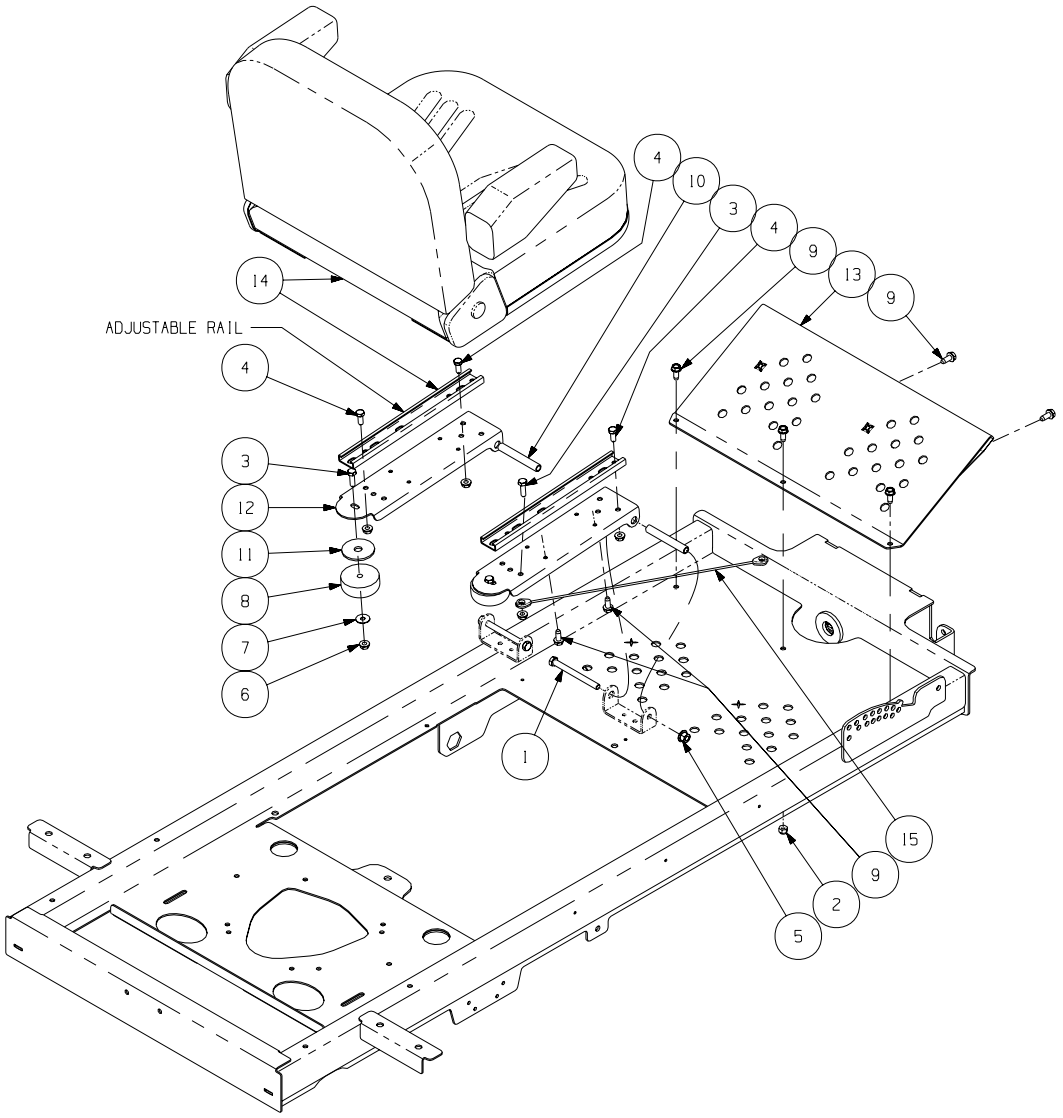

GD: 02003444-10/18/07

Ref. No.	Part No.	Description	Qty.	Ref. No.	Part No.	Description	Qty.
1	00011925	Hex Cap Screw, 3/8-16, 4.00	2	11	02001098	Washer, .531 ID x 2.13 OD x .134	2
2	00012165	Nylock Nut, 5/16-18	3	12	02002746	Seat Mounting Bracket	2
3	00013092	Hex Cap Screw, 5/16-18 x 1.0	3	13	02002960	Foot Rest Bracket	1
4	00013406	Hex Cap Screw, 5/16-18 x .75	3	14	02002976	Seat includes:	1
5	00022560	Flange Lock Hex Nut, 3/8-16	2		02005335	RH & LH Armrest Kit	
6	01000635	Nut, 5/16-18, Hex Flange Lock	6		02005336	LH Armrest Kit	
7	01000960	Belle Washer, .325 x .930 x .045	2		02005337	RH Armrest Kit	
8	01002753	Grommet, 2.5 OD x 1.0 Long	2		02003997	Seat Switch	1
9	01008620	Self Tapping Screw 5/16-18 x .750	7	15	02004062	Lift Cable	1
10	01009872	Spacer, .370 ID x .500 OD x 3.45	2				

Lift Assembly - Figure 20 and Parts List

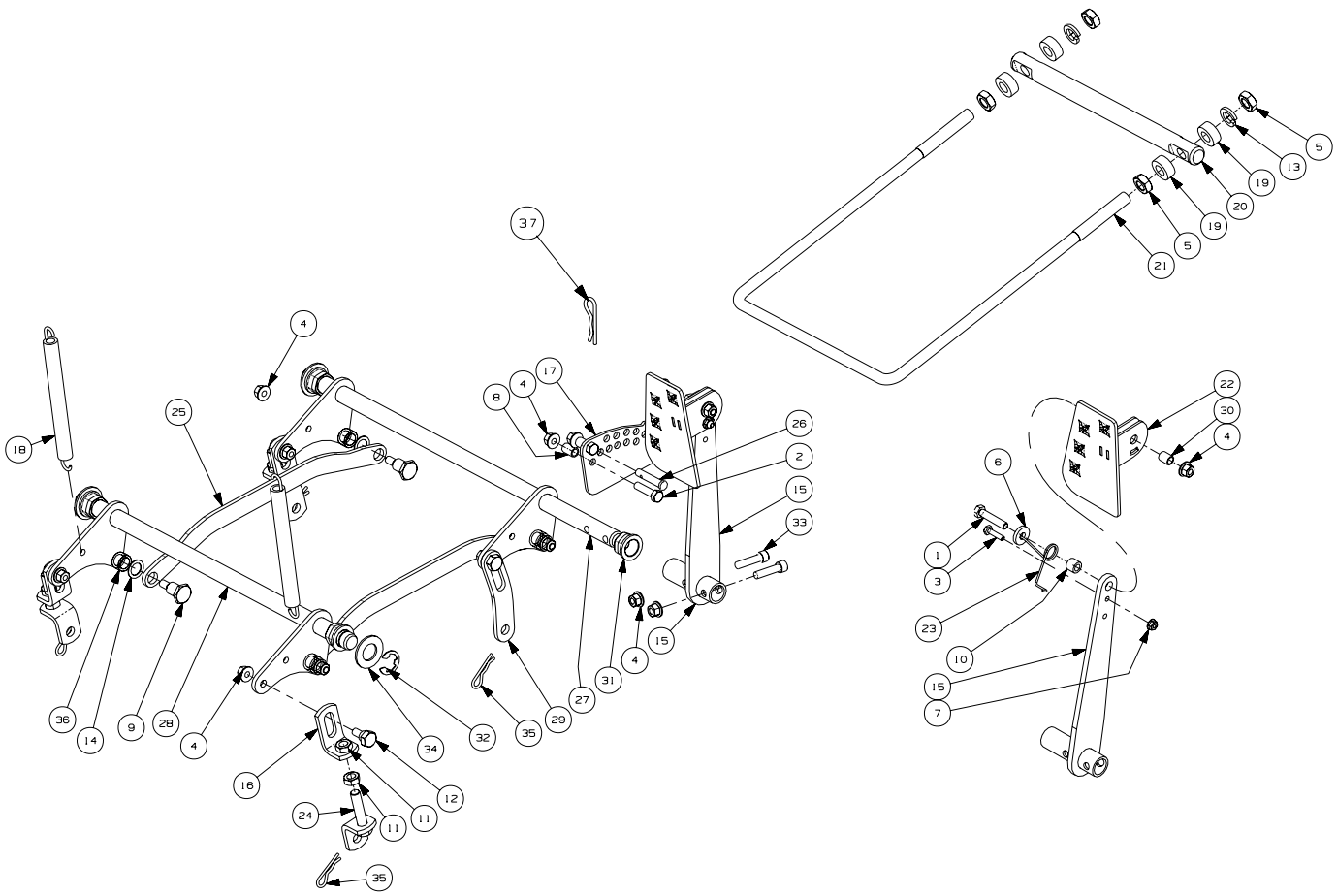

GD: 02004983-11/13/07

Ref. No.	Part No.	Description	Qty.	Ref. No.	Part No.	Description	Qty.
1	00008495	Capscrew, 3/8-16 x 1-3/4	1	20	02004227	Trail Link Pivot Rod	1
2	00011438	Hex Cap Screw, 3/8-16 x 1-1/2	3	21	02002879	Front Lift Rod	1
3	00013416	Hex Cap Screw, 1/4-20 x 1.00	1	22	02002880	Foot Pedal Assembly	1
4	00022560	Nut, 3/8-16, Hex Flange Lock	14	23	02002882	Foot Lift Torsion Spring	1
5	00035632	Jam Nut, 5/8-11	4	24	02002890	Lower Lift Bracket Assembly	3
6	00083192	Idler Washer	1	25	02002893	Lift Link	2
7	01002766	Nut, 1/4-20, Hex Flange Lock Nut	1	26	02002907	Clevis Pin, .375 x 1.89 x 2.125	1
8	01003468	Spacer, .375 x .50 x .75 Lg	3	27	02002915	Front Shaft Assembly	1
9	01003536	Shoulder Screw, 0.625 OD x .830 Lg.	4	28	02002916	Rear Shaft Assembly	1
10	01007312	Spacer, .625 OD x .385 ID x 1/2	1	29	02002979	Link Plate	1
11	01008658	Jam Nut, 1/2-20	6	30	02003436	Spacer, .380 ID x .500 OD x .605	1
12	02000393	Shoulder Screw, 3/8-16, .56 x .27	4	31	02003685	Hex Flange Bearing, .875 ID	4
13	02000671	Lock Washer, 5/8	2	32	02003716	E Clip, .875 Dia.	3
14	02001891	Washer, 1.00 OD x .625 ID x .048	4	33	02003717	Sockethead Capscrew, 3/8-16 x 1.50	2
15	02002374	Foot Lift Pivot Assembly	1	34	02003720	Flat Washer, .94 x 1.75 x .11	3
16	02002382	Deck Lift Bracket	3	35	02000673	Hair Pin	4
17	02004694	Index Plate	1	36	02005334	Spacer, .628 ID x .875 OD x .500	4
18	02002629	Extension Spring, 8.246 x .75 x .135	2	37	00021956	Hair Pin	1
19	02003751	Spacer, .635 ID x 1.188 OD x .406	4				

44" Decal Map

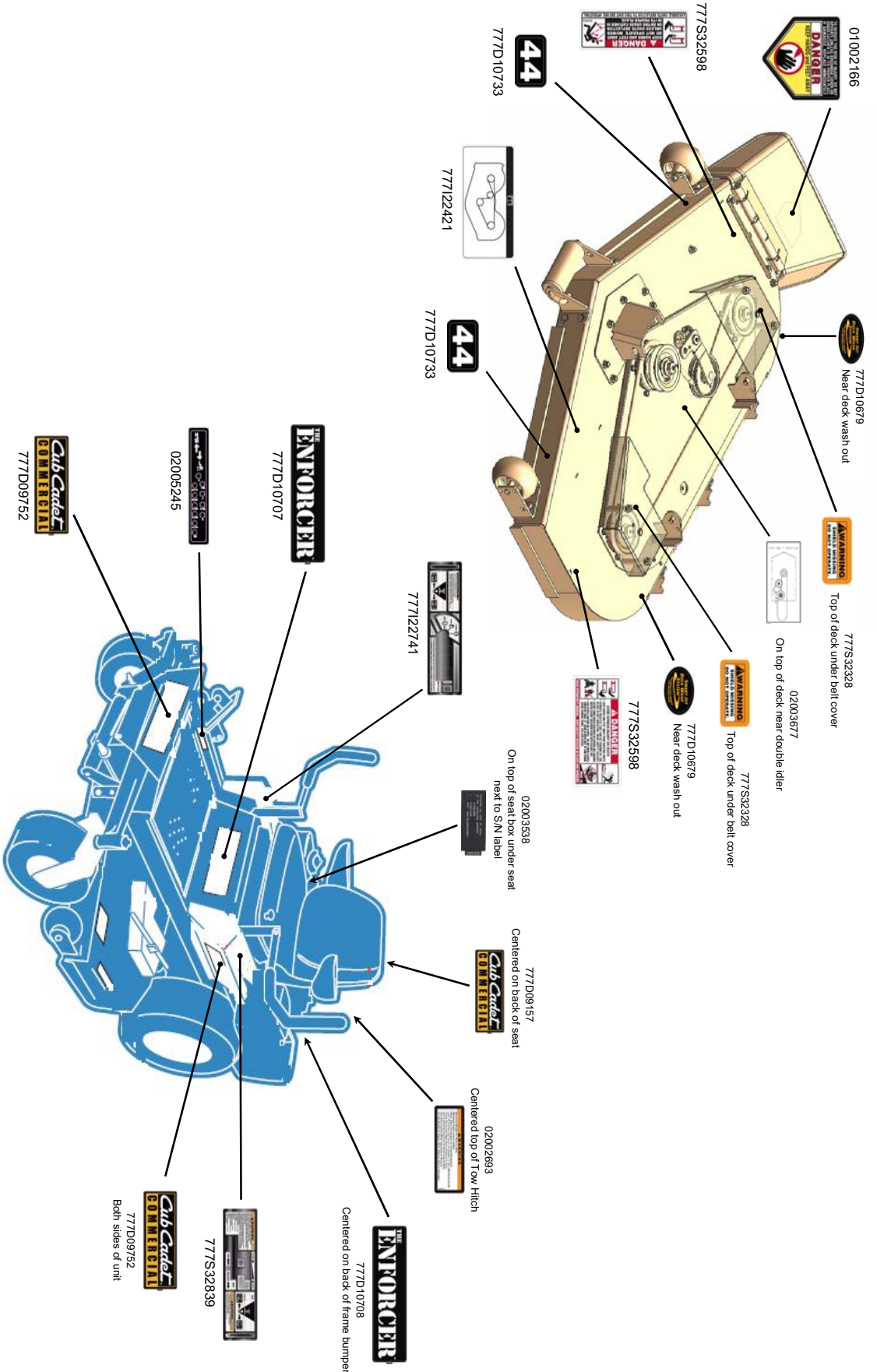
01002166
777S32598
777D10733
44
777I22421
777D10733
44
777D10679
Near deck wash out
777S32328
Top of deck under belt cover
02003677
On top of deck near double idler
777S32328
Top of deck under belt cover
777D10679
Near deck wash out
777S32598
777I22741
02003538
On top of seat box under seat next to S/N label
777D09157
Centered on back of seat
02002693
Centered top of Tow Hitch
777D10708
Centered on back of frame bumper
777S32839
777D09752
Both sides of unit
777D10707
02005245
777D09752

48" Decal Map

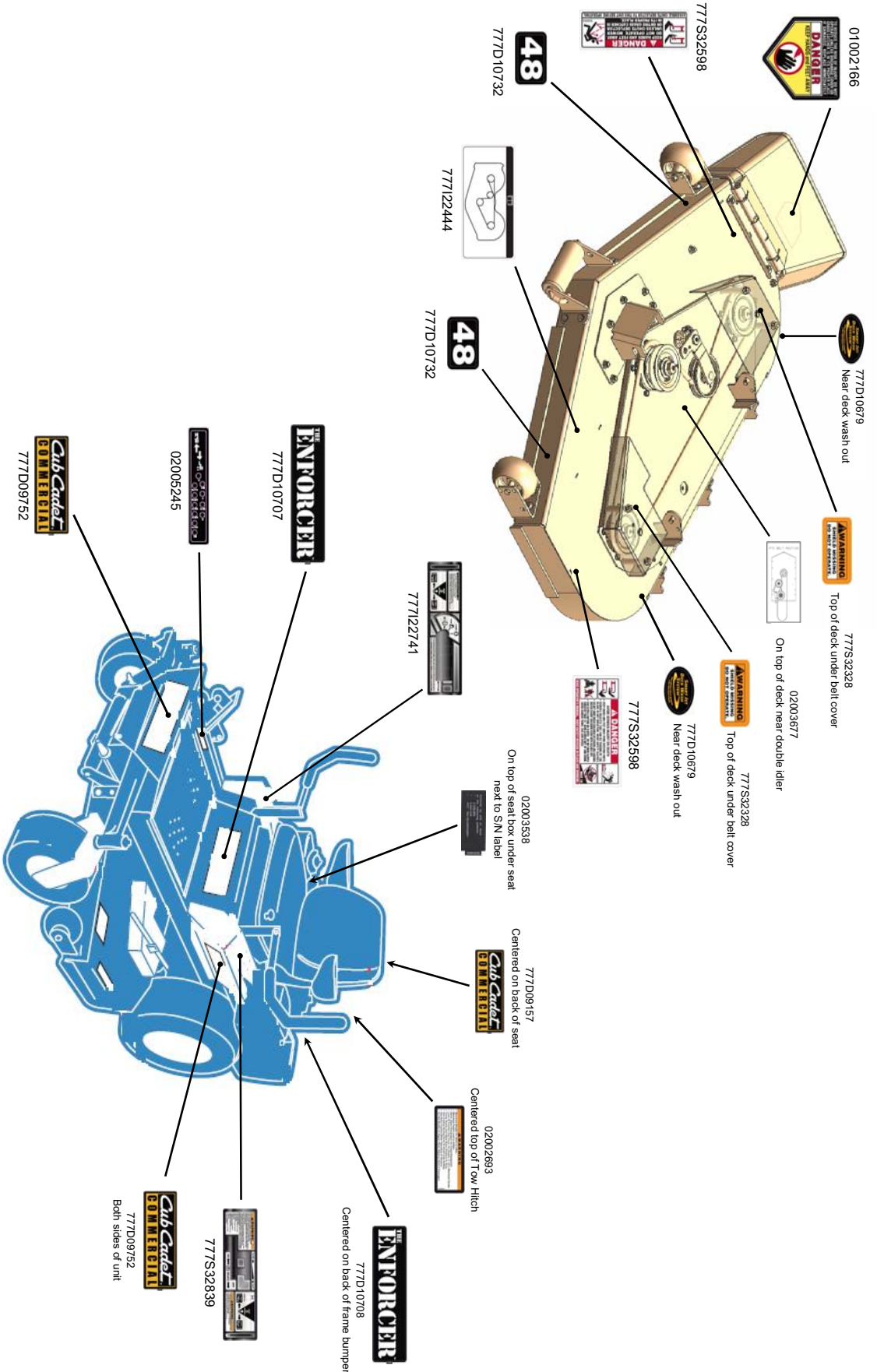
01002166
777S32598
777D10732
48
777I22444
48
777D10732
777D10679
Near deck wash out
777S32328
Top of deck under belt cover
02003677
On top of deck near double idler
777S32328
Top of deck under belt cover
777D10679
Near deck wash out
777S32598
777I22741
02003538
On top of seat box under seat next to S/N label
777D09157
Centered on back of seat
02002693
Centered top of Tow Hitch
777D10708
Centered on back of frame bumper
777S32839
777D09752
Both sides of unit
777D10707
02005245
777D09752

54" Decal Map

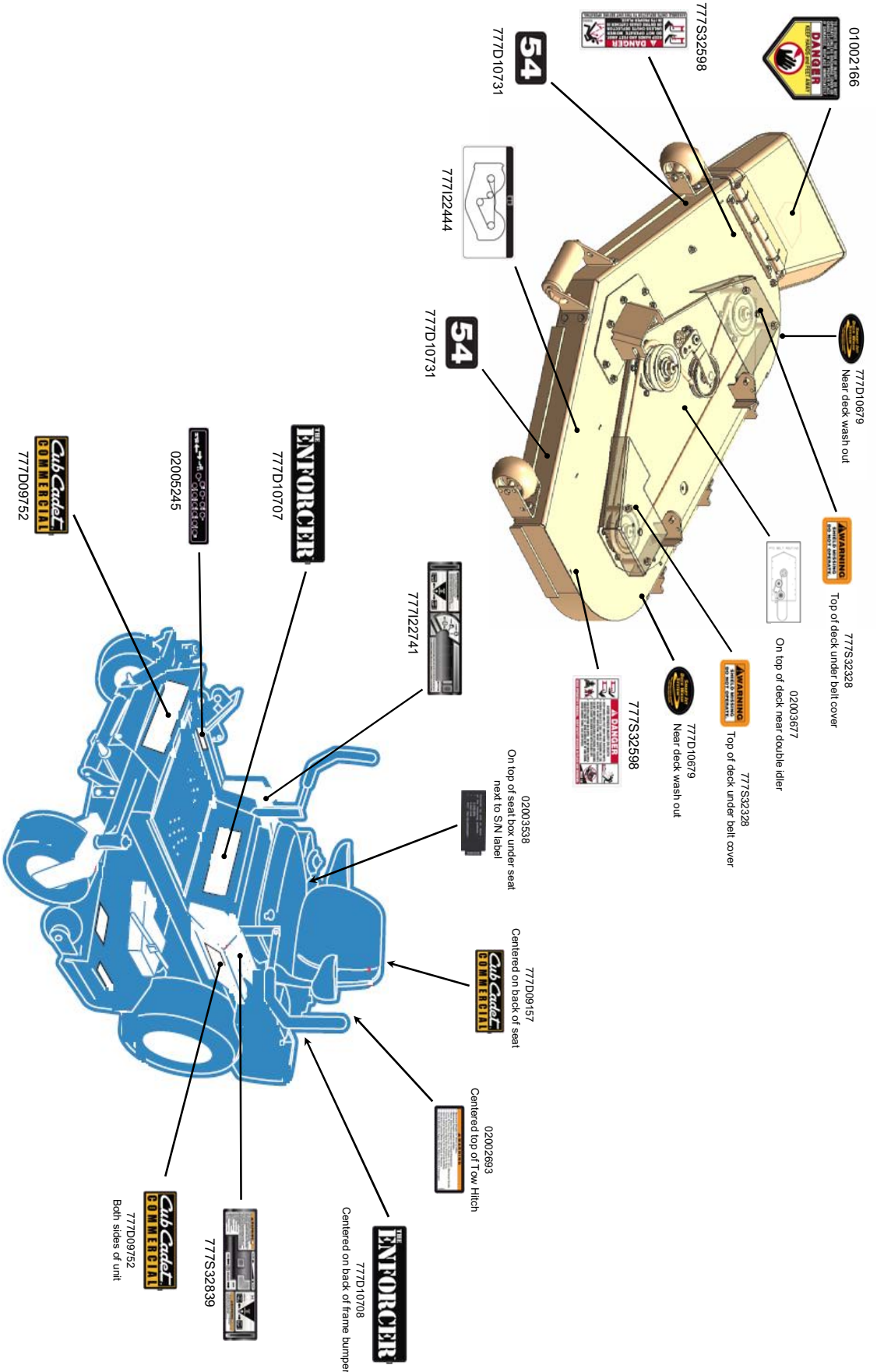
01002166
777S32598
54
777D10731
777I22444
54
777D10731
777D10679
Near deck wash out
777S32328
Top of deck under belt cover
02003677
On top of deck near double idler
777S32328
Top of deck under belt cover
777D10679
Near deck wash out
777S32598
777I22741
02003538
On top of seat box under seat next to S/N label
777D09157
Centered on back of seat
02002693
Centered top of Tow Hitch
777D10708
Centered on back of frame bumper
777S32839
777D09752
Both sides of unit
777D09752
02005245
777D10707



Cub Cadet LLC
P.O. Box 361131
Cleveland, OH 44136

Form No. 02004995 Rev. 08-0 10/25/2007