Cub Cadet
COMMERCIAL

Hydrostatic Zero-Turn Commercial Riding Mower

Professional Turf Equipment

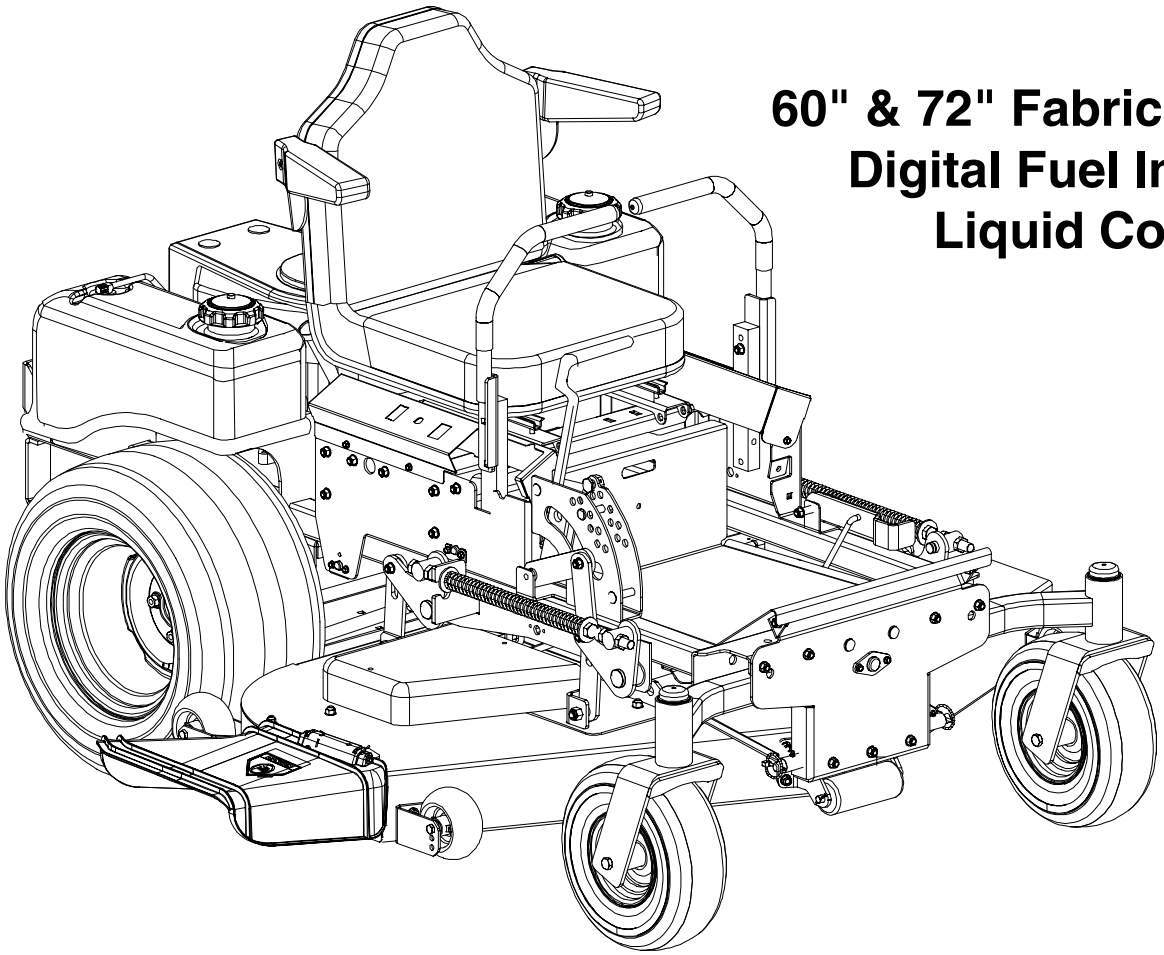

60" & 72" Fabricated Deck
Digital Fuel Injection,
Liquid Cooled

ILLUSTRATED PARTS LIST

TABLE OF CONTENTS

60" Frame Assembly 3
72" Frame Assembly 4
Hydro Tank and Hose Assembly 5
60" Fabricated Cutter Deck . . . . . 6 and 7
60" Spindle Assembly . . . . . 8 and 9
72" Fabricated Cutter Deck . . . . . 10 and 11
72" Spindle Assembly . . . . . 12 and 13
Brake Assembly 14
Fuel Tank Assembly 15
60" Front Caster Assembly 16
72" Front Caster Assembly 17
60" Wheel Assembly 18
Hydro Pump Assembly 19
Control Assembly . . . . . 20 and 21
Seat Assembly 22
29 HP Kawasaki Engine Assembly 23
Electrical Assembly Kawasaki 24
Brake Motor Mount and Hub 25
60" Lift Assembly . . . . . 26 and 27
72" Lift Assembly . . . . . 28 and 29
Foot Pedal Assembly 30
Floor Panel Assembly 31

MODELS LISTED IN THIS MANUAL

29HP Tank, 53BB5GFX750

29HP Tank, 53AB5GFZ750

60" Frame Assembly- Figure 1 and Parts List

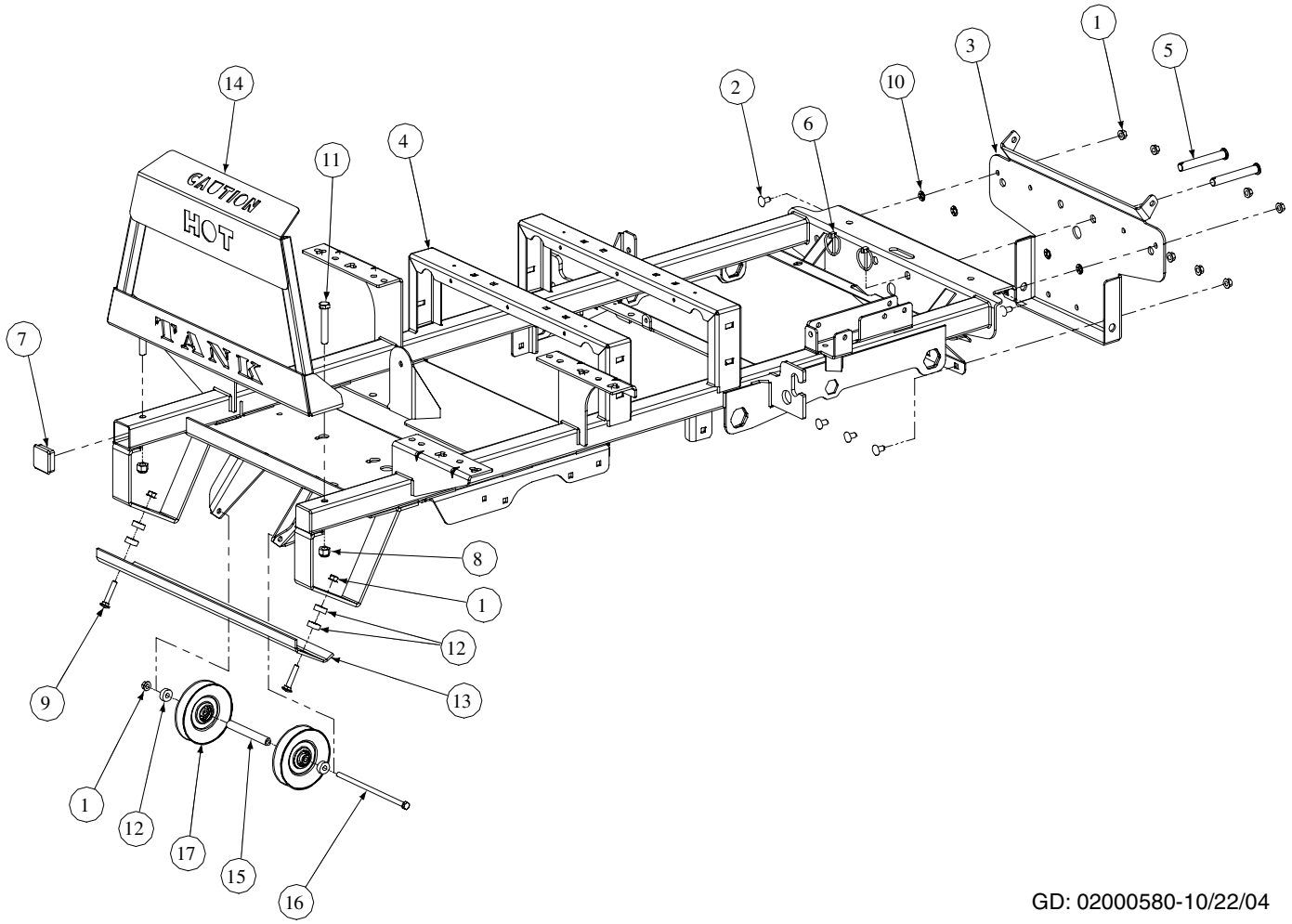

GD: 02000580-10/22/04

Ref. No.	Part No.	Description	Qty.
1	00022560	Hex Nut, 3/8-16 Flange Lock	10
2	01000372	Carriage Bolt, 3/8-16 x .75 Long	7
3	01001713	Bracket Assembly, Frame, Front	1
4	02000585	Frame Assembly	1
5	01003282	Clevis Pin, .625 Dia x 4.375 Long	2
6	01003993	Linch Pin, 3/16 Dia.	2
7	01005160	Plug, Square Tube	2
8	00012428	Lock Nut, Nylon Insert, 1/2-13	2
9	01000364	Carraige Bolt, 3/8-16 x 1.75	2
10	01008225	Push Retainer, 3/8	4
11	00030046	Hex Head Cap Screw, 1/2-13 x 3.00	2
12	01000397	Spacer, .406 ID x 1.00 OD x .380	6
13	01009607	Guard Bracket	1
14	02000547	Muffler Guard Assembly	1
15	01009604	Spacer, .385 ID x .625 OD x 4.89	1
16	710-3248	Hex Head Cap Screw, 3/8-16 x 8.50	1
17	756-3045	Idler Pulley, 5.06 Dia.	2

72" Frame Assembly- Figure 2 and Parts List

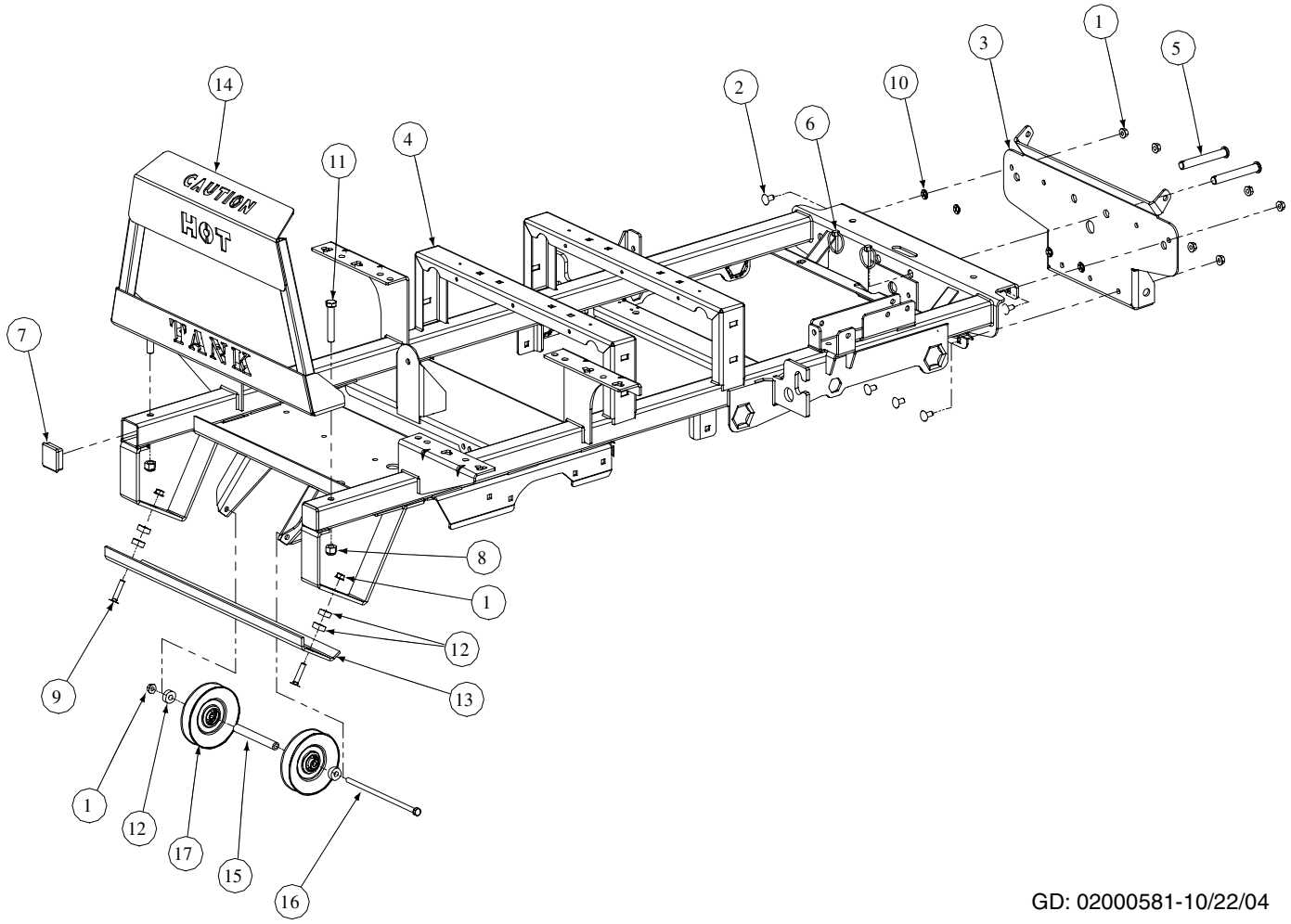

GD: 02000581-10/22/04

Ref. No.	Part No.	Description	Qty.
1	00022560	Hex Nut, 3/8-16 Flange Lock	10
2	01000372	Carriage Bolt, 3/8-16 x .75 Long	7
3	01007779	Bracket Assembly, Frame, Front	1
4	02000585	Frame Assembly	1
5	01003282	Clevis Pin, .625 Dia x 4.375 Long	2
6	01003993	Linch Pin, 3/16 Dia.	2
7	01005160	Plug, Square Tube	2
8	00012428	Lock Nut, Nylon Insert, 1/2-13	2
9	01000364	Carraige Bolt, 3/8-16 x 1.75	2
10	01008225	Push Retainer, 3/8	4
11	00030046	Hex Head Cap Screw, 1/2-13 x 3.00	2
12	01000397	Spacer, .406 ID x 1.00 OD x .380	6
13	01009607	Guard Bracket	1
14	02000547	Muffler Guard Assembly	1
15	01009604	Spacer, .385 ID x .625 OD x 4.89	1
16	710-3248	Hex Head Cap Screw, 3/8-16 x 8.50	1
17	756-3045	Idler Pulley, 5.06 Dia.	2

Hydro Tank and Hose Assembly - Figure 7 and Parts List

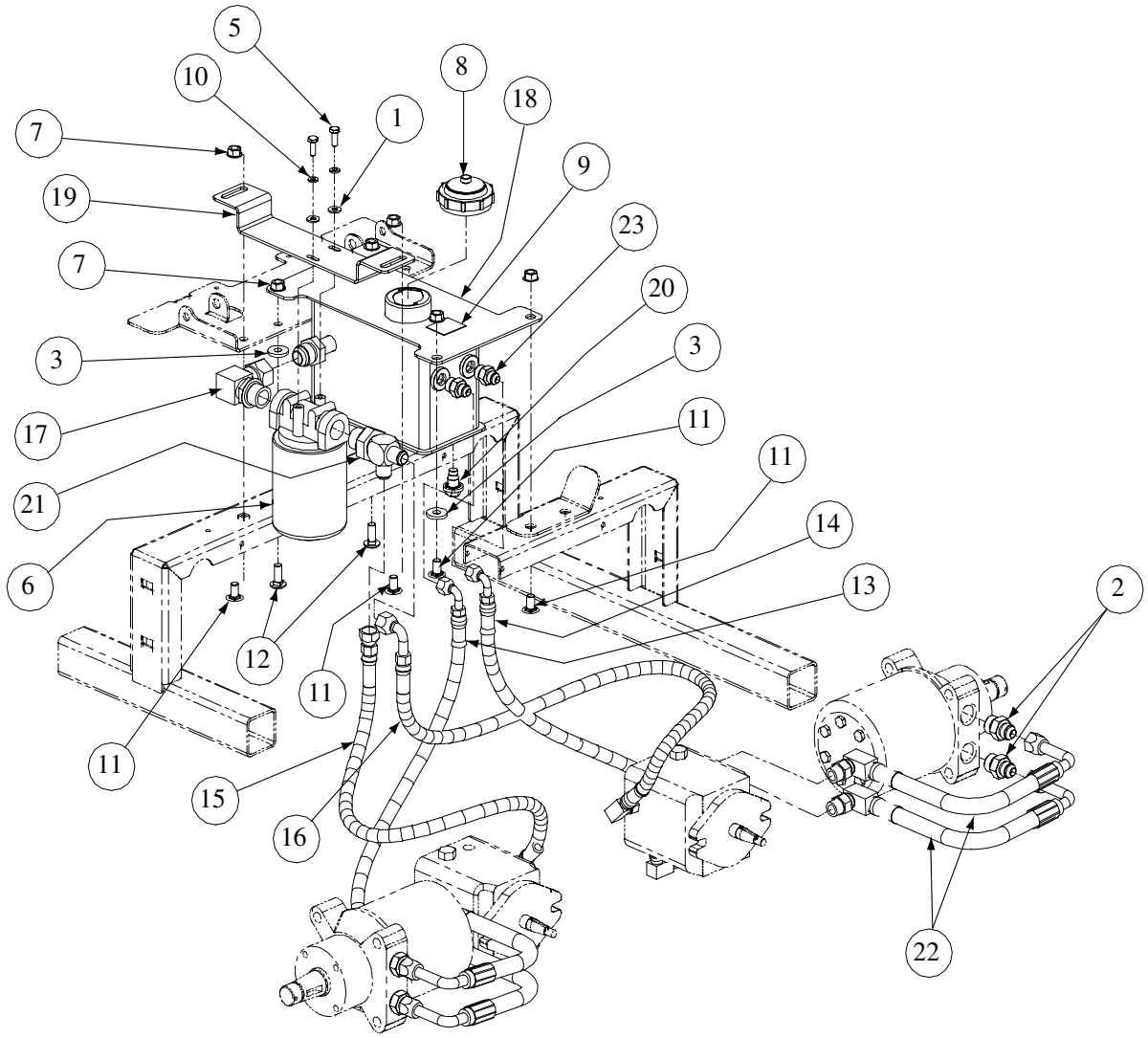

GD: 01009513-12/02/04

Ref. No.	Part No.	Description	Qty.	Ref. No.	Part No.	Description	Qty.
1	00012154	Washer, 1/4	2	12	01000643	Carriage Bolt, 3/8-16 x 1.00	2
2	00012288	Fitting 1/2 x 3/4 - O Ring	4	13	01010174	28.87" Return Hose Assembly	1
3	01000723	Washer, .406 x 1.0 OD x .105	2	14	01010175	31.88" Return Hose Assembly	1
4	00012470	Cable Tie, 3/16 x .05 x 7.4	5	15	01009540	29.25" Supply Hose Assembly	1
5	00013131	Hex Cap Screw, 1/4-20, .75	2	16	01009541	40.31 Supply Hose Assembly	1
6	00017665	Filter Head 3/4 includes:	1	17	01009543	Fitting Elbow, 90	1
	01004166	Filter		18	01009544	Hydraulic Tank Assembly	1
7	00022560	Hex Nut Flange Lock, 3/8-16	6	19	01009558	Filter Mounting Bracket	1
8	00030261	Cap, Hydro Oil Tank	1	20	01004192	Oil Pan Drain w/ Seal and Plug	1
9	01009633	Decal Oil Only 5W40	1	21	01006959	Tee Fitting, 3/4 x 1/2 x 1/2	1
10	00012132	Lock Washer, 1/4	2	22	01009542	Hydraulic Hose	4
11	01000372	Carriage Bolt, 3/8-16 x .75 LG.	4	23	01002606	Fitting 1/2 x 3/8	2

NOTE: Lubricant, 737-3120, 4.0 Quarts

60" Fabricated Cutter Deck - Figure 3

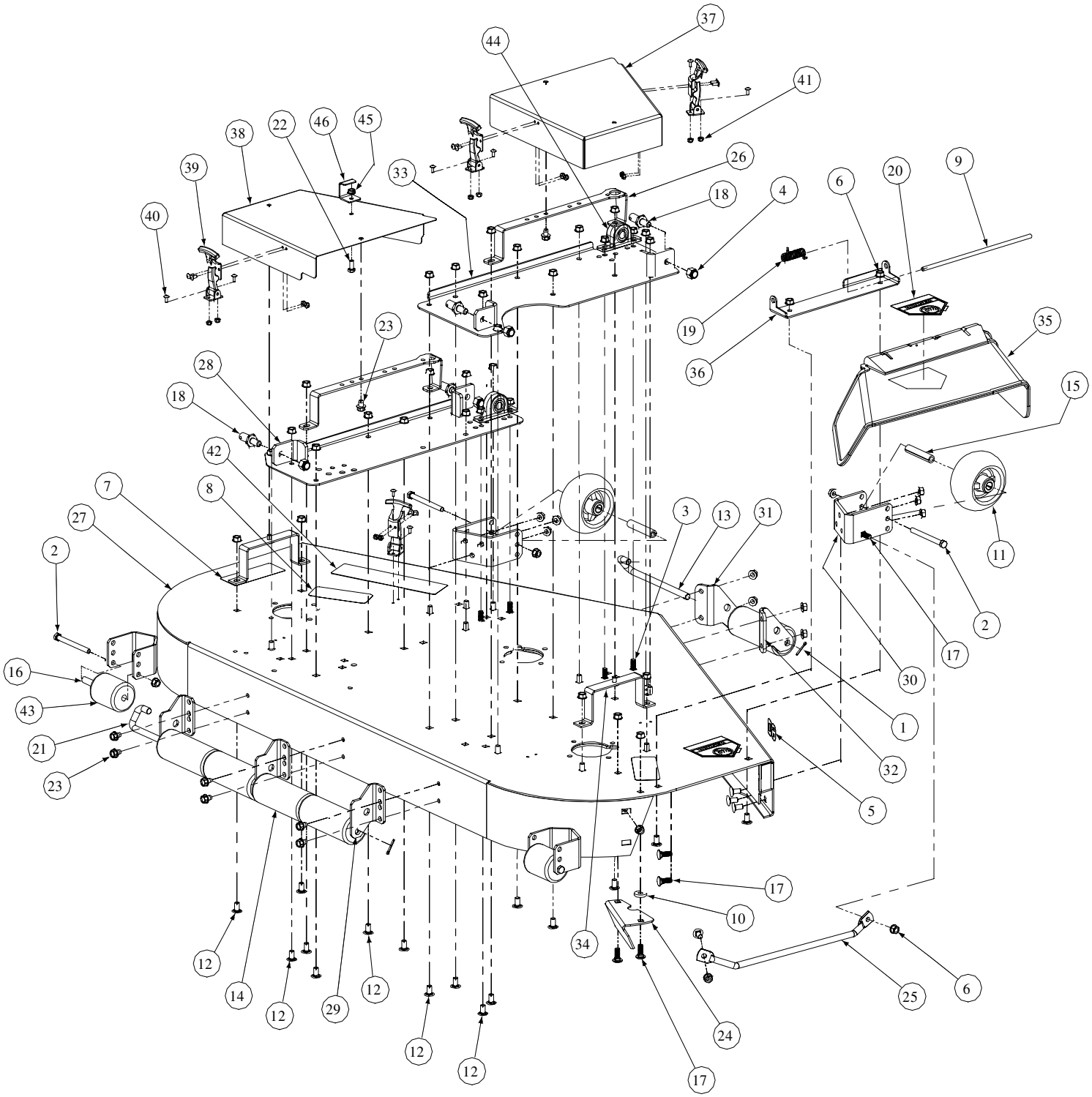

GD: 01009439-01/06/05

60" Fabricated Cutter Deck - Parts List for Figure 3

Ref. No.	Part No.	Description	Qty.
1	00003107	Cotter Pin, .125 Dia. x 1.0	2
2	00011925	Hex Cap Screw, 3/8-16, 3.75	4
3	01002010	Carriage Screw, 3/8-16 x 1.25	4
4	00012428	Lock Nut, Nylon Insert, 1/2-13	4
5	01002130	Label, 60"	2
6	00022560	Flange Lock Hex Nut, 3/8-16	50
7	00030633	Decal, Rotating Blade	1
8	00030635	Decal, Warning Shield Missing	2
9	01003254	Chute Deflector Rod	1
10	00083192	Idler Washer	1
11	01000343	Complete Wheel, 5.00 Dia.	2
12	01000372	Carriage Bolt, 3/8-16 x .75 Lg.	35
13	01000375	Roller Pin, 1/2 Dia. x 7.31 Lg.	1
14	01000385	Front Roller	5
15	01000398	Wheel Spacer	2
16	01009808	Spacer, .385 x .50 x 3.045	2
17	01000643	Carriage Bolt, 3/8-16 x 1	7
18	01001745	Pin, 5/8 Dia. x 1.2 Lg.	4
19	01003253	Torsion Spring, 0.4ID x 2.16Lg	1
20	01002166	Decal, Danger Hand and Feet	2
21	01002635	Roller Pin	1
22	00013406	Hex Cap Screw, 5/16-18 x .75	1
23	01004304	Hex Index Washer Screw, 3/8-16, .5	8
24	01009300	Chute Bracket	1
25	01008644	Finger Guard	1
26	01004685	Belt Cover Support	2
27	01008814	60 Deck Assembly	1
28	01008633	Left Hand Mount Deck Bracket Assembly	1
29	01005364	Deck Roller Mount Bracket	3
30	01005260	Anti-Scalp Wheel Front Mount Bracket	2
31	01005256	Left Hand Front Roller Mount Bracket	1
32	01005258	Right Hand Front Roller Mount Bracket	1
33	01008635	Right Hand Deck Bracket Assembly	1
34	01005437	Outer Belt Cover Support Assembly	2
35	01006693	Chute Deflector	1
36	01008226	Chute Deflector Bracket	1
37	02000448	Right Hand Deck Belt Cover	1
38	02000447	Left Hand Deck Belt Cover	1
39	01005869	T-Handle Latch Draw	4
40	00017778	Phillips Head Screw, 10-32	16
41	00014608	Lock Nut, Nylon Insert, 10-32	16
42	01006086	Commercial Mower Label	1
43	01001169	Grass Catcher Roller	2
44	02000109	Pillow Block	2
45	01000635	Nut, 5/16-18, Hex Flange Lock	1
46	01004109	Stop Bracket	1

60" Fabricated Deck Spindle Assembly - Figure 4

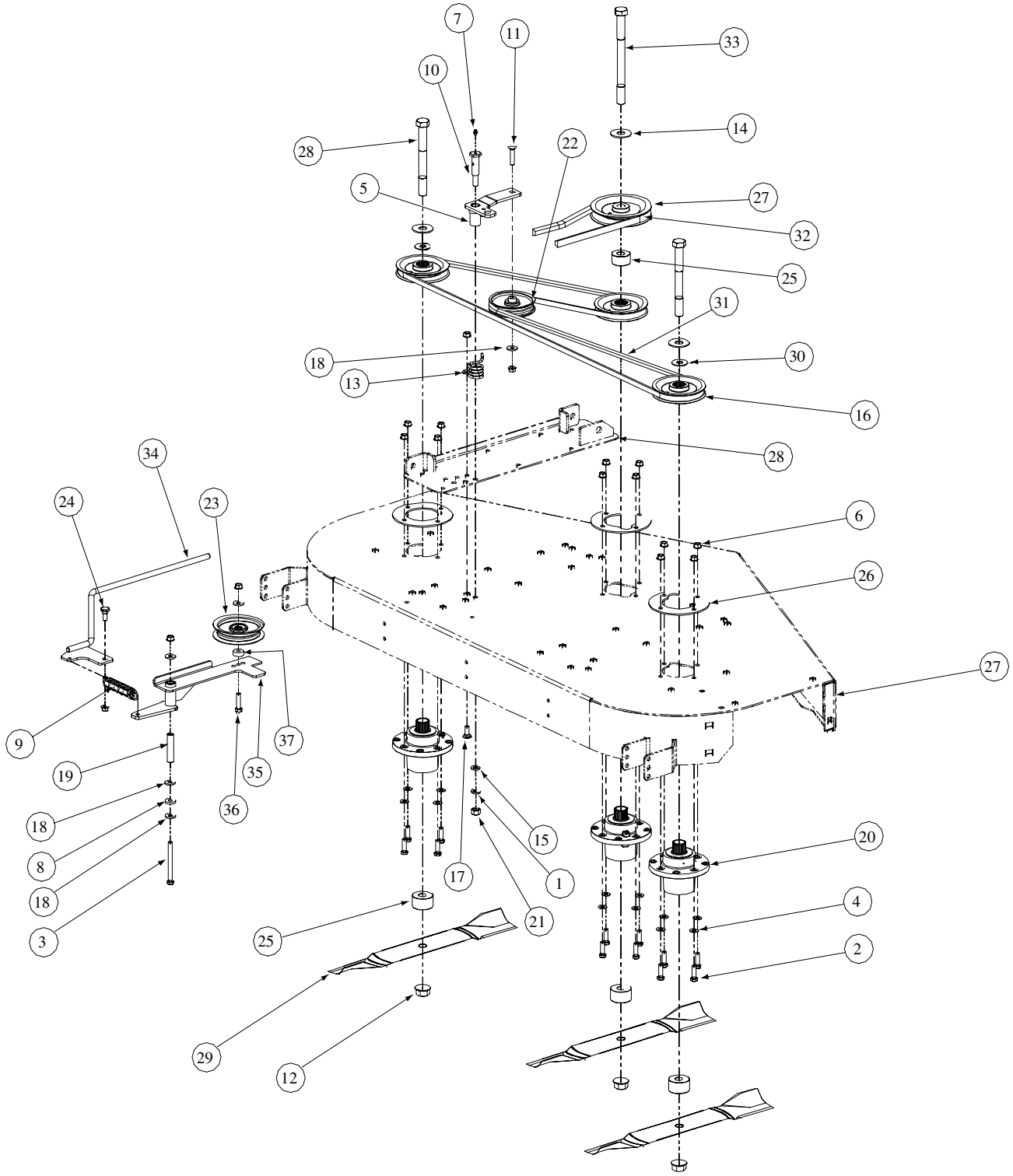

GD: 01009508-11/15/04

60" Fabricated Deck Spindle Assembly - Parts List for Figure 4

Ref. No.	Part No.	Description	Qty.
1	01000389	Lock Washer, 7/16	1
2	00011438	Hex Cap Screw, 3/8-16 x 1-1/2	12
3	00011925	Hex Cap Screw, 3/8-16, 4.00	1
4	00012158	Flat Washer, 3/8	12
5	01005737	Idler Arm Casting, Deck Spindle	1
6	00022560	Flange Lock Hex Nut, 3/8-16	17
7	00060078	Grease Fitting, 1/4-28 x 3/16	1
8	00083192	Idler Washer	1
9	01009635	Extension Spring, .98 x OD x 5.000	1
10	01000302	Shoulder Screw, 7/16-14	1
11	01000364	Hex Carriage Screw, 3/8-16, 1.75	1
12	01000380	Flange Hex Nut, 3/4-16	3
13	01000387	Torsion Idler Spring	1
14	01000392	Flat Washer, .781 ID 2.00 OD, .105	3
15	01000393	Flat Washer, .469 ID, .875 OD, .105	1
16	01005616	V-Pulley, 5.00 OD	3
17	01000643	Carriage Bolt, 3/8-16 x 1	1
18	01000723	Flat Washer, .406 ID, 1.0 OD, .105	5
19	01003245	Spacer, .39 ID x .625 OD x 2.75	1
20	01003532	Aluminum Spindle Assembly	3
21	00005763	Hex Nut, 7/16-14	1
22	01004081	Flat Pulley	1
23	01004101	Idler Pulley, 4.06 OD	1
24	01004118	Shoulder Screw, .50 x .27 Lg., 3/8-16	1
25	01004415	Spacer, .760 ID x 2.00 OD x .925	4
26	01005434	Aluminum Spindle Support Plate	3
27	01008081	V-Pulley, Cast, 6.360 OD	1
28	01005213	Hex Cap Screw, 3/4-16, 7.00	2
29	01005338	Hi-Lift Blade, 21.0, 0.756 ID	3
30	01003123	Spacer .812 ID x .218 LG	2
31	01005376	V-Belt, A Section x 122.3	1
32	01009583	V-Belt, B Section x 147.4	1
33	01005388	Hex Cap Screw, 3/4-16, 9.00	1
34	01005690	Spring Tension Rod Assembly	1
35	01006181	Idler Arm Assembly, Flat Top Bearing	1
	01000308	Bearing Sleeve	2
36	00012172	Hex Cap Screw, 3/8-16 x 2.00	1
37	01000397	Spacer, .406 ID x 1.00 OD x .38	1

72" Fabricated Cutter Deck - Figure 5

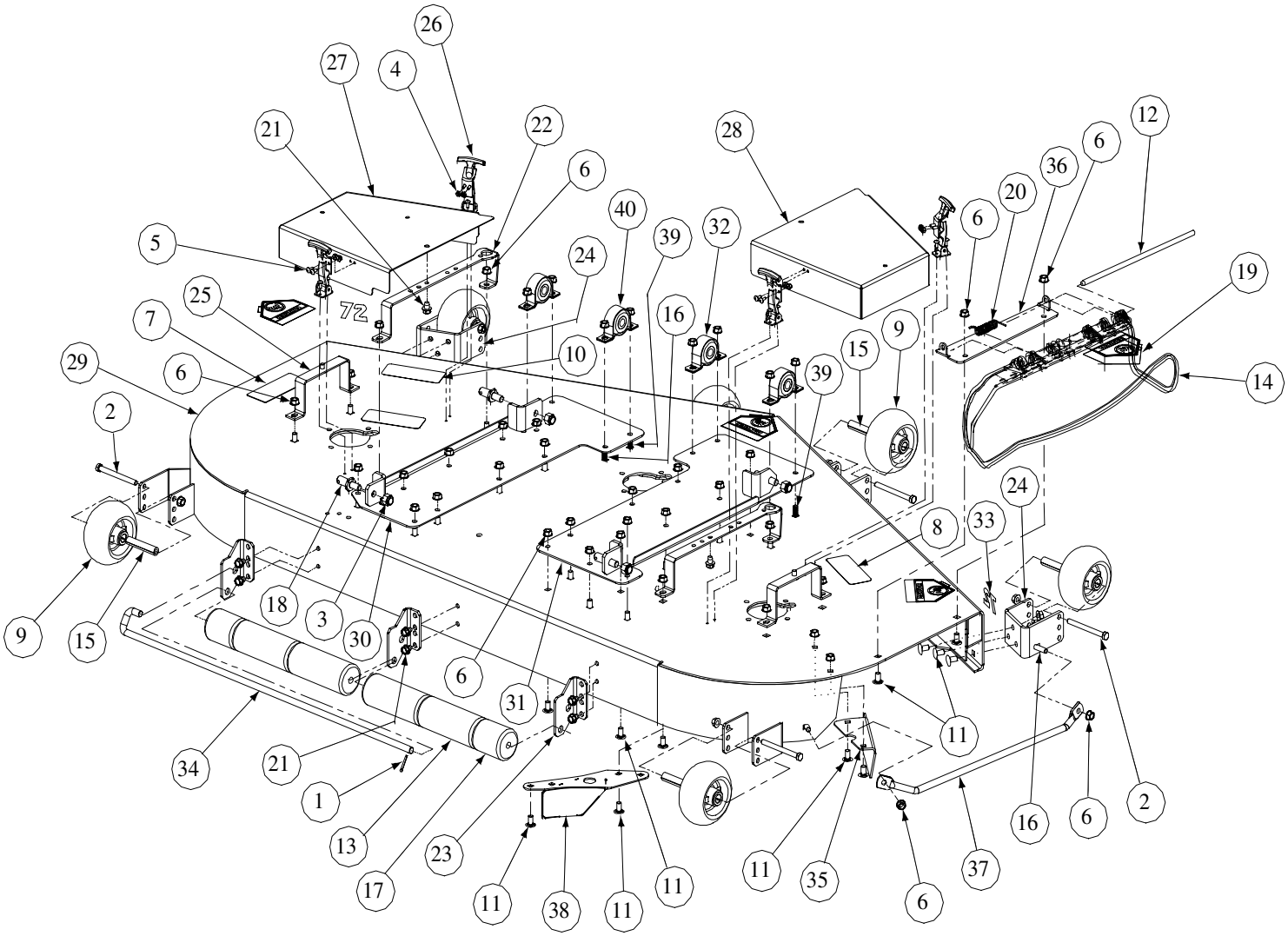

GD: 01008212-08/18/04

72" Fabricated Cutter Deck - Parts List for Figure 5

Ref. No.	Part No.	Description	Qty.
1	00003107	Cotter Pin, .125 Dia. x 1.0	1
2	00011925	Hex Cap Screw, 3/8-16, 3.75	6
3	00012428	Lock Nut, Nylon Insert, 1/2-13	4
4	00014608	Lock Nut, Nylon Insert, #10-32	16
5	00017778	Phillips Head Screw, #10-32 x 1/2	16
6	00022560	Flange Lock Hex Nut, 3/8-16	61
7	00030633	Decal, Rotating Blade	1
8	00030635	Decal, Warning Shield Missing	2
9	01000343	Complete Wheel, 5.00 Dia.	6
10	01006086	Command Cut Large	1
11	01000372	Carriage Bolt, 3/8-16 x .75 Lg.	44
12	01009102	Pin, .375 x 14.06	1
13	01000385	Front Roller	4
14	01009705	Chute Deflector	1
15	01000398	Wheel Spacer	6
16	01000643	Carriage Bolt, 3/8-16 x 1	2
17	01001169	Grass Catcher Roller	2
18	01001745	Pin, 5/8 Dia. x 1.2 Lg.	4
19	01002166	Decal, Danger Hand and Feet	2
20	01003253	Torsion Spring, 0.4ID x 2.16Lg	1
21	01004304	Hex Index Washer Screw, 3/8-16, .5	8
22	01004685	Belt Cover Support	2
23	01005364	Deck Roller Mount Bracket	3
24	01005260	Anti-Scalp Wheel Front Mount Bracket	4
25	01005437	Outer Belt Cover Support Assembly	2
26	01005869	T-Handle Latch Draw	4
27	02000447	Left Hand Deck Belt Cover	1
28	02000448	Right Hand Deck Belt Cover	1
29	01008097	72 Deck Assembly	1
30	01008224	Left Hand Deck Weldment Bracket	1
31	01008223	Right Hand Deck Weldment Bracket	1
32	02000109	Pillow Block, Steel	3
33	01008230	Decal, 72"	2
34	01008233	Roller Pin	1
35	01009300	Chute Bracket	1
36	01008514	Chute Bracket	1
37	01008526	Finger Guard	1
38	01009843	Discharge Baffle Weldment	1
39	01002010	Carriage Screw, 3/8-16 x 1.25	7
40	02000110	Pillow Block, Bronze	1

72" Fabricated Deck Spindle Assembly - Figure 6

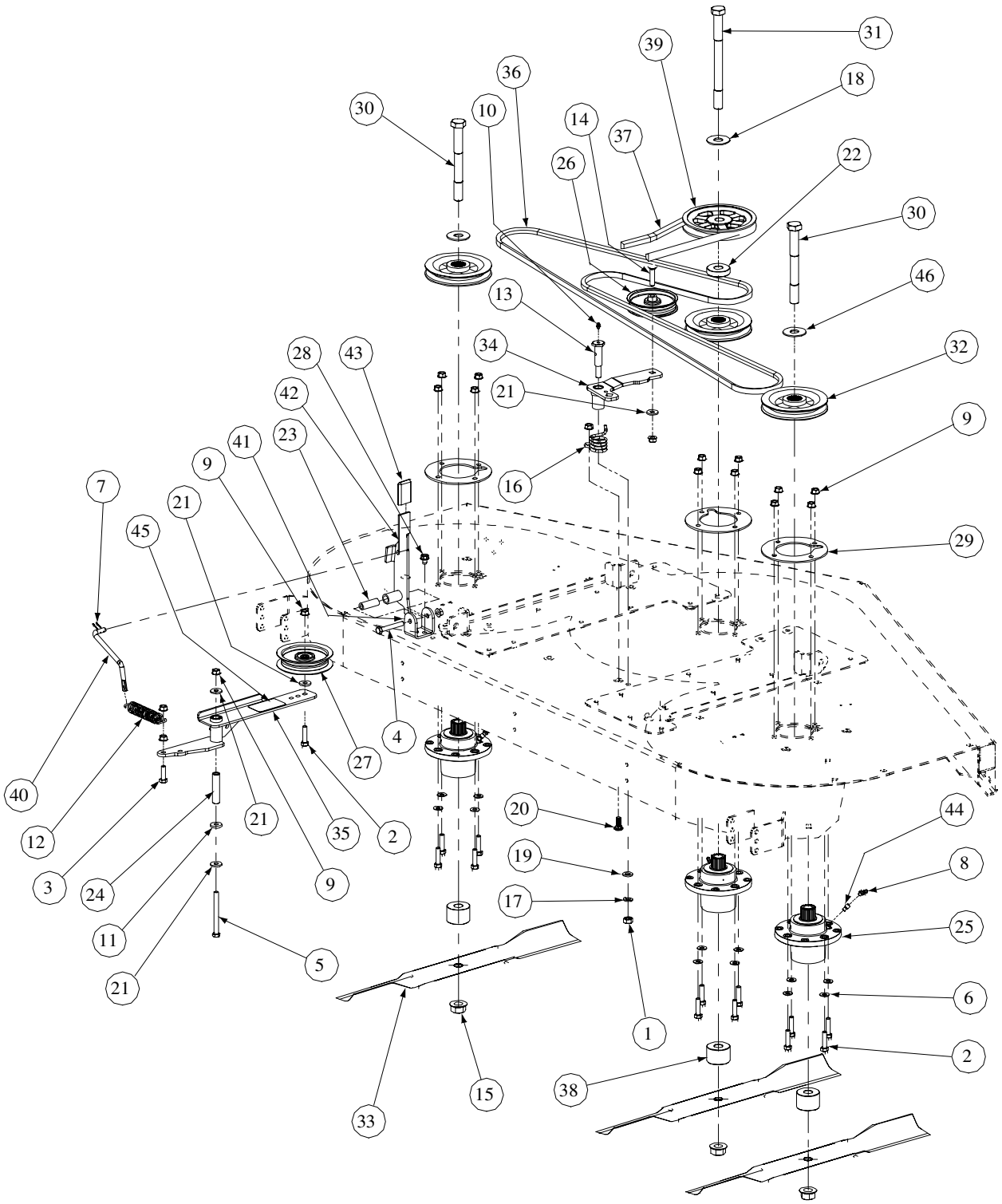

GD: 02000586-12/07/04

72" Fabricated Deck Spindle Assembly - Parts List for Figure 6

Ref. No.	Part No.	Description	Qty.
1	00005763	Hex Nut, 7/16-14	1
2	00011438	Hex Cap Screw, 3/8-16 x 1-1/2	13
3	00011444	Hex Cap Screw, 3/8-16 x 1-1/4	1
4	00011861	Hex Cap Screw, 3/8-16 x 2-1/2	1
5	00011925	Hex Cap Screw, 3/8-16, 4.00	1
6	00012158	Flat Washer, 3/8	12
7	01002771	Cotter Pin, .072 x 1.12 Long	2
8	00021958	Taper Grease Fitting, 1/4-28, 45 degree	3
9	00022560	Flange Lock Hex Nut, 3/8-16	19
10	00060078	Grease Fitting, 1/4-28 x 3/16	2
11	00083192	Idler Washer	1
12	02000726	Extension Spring, 1.0 x OD x 5.00	1
13	01000302	Shoulder Screw, 7/16-14	1
14	01000364	Hex Carriage Screw, 3/8-16, 1.75	1
15	01000380	Flange Hex Nut, 3/4-16	3
16	01000387	Torsion Idler Spring	1
17	01000389	Lock Washer, 7/16	1
18	01000392	Flat Washer, .781 ID 2.00 OD, .105	1
19	01000393	Flat Washer, .469 ID, .875 OD, .105	1
20	01000643	Carriage Bolt, 3/8-16 x 1	1
21	01000723	Flat Washer, .406 ID, 1.0 OD, .105	4
22	01002564	Spacer, .76 ID x 2.0 OD x .477	1
23	01002751	Spacer, .39 ID x .63 OD x 1.75	1
24	01003245	Spacer, .39 ID x .625 OD x 2.75	1
25	01003532	Aluminum Spindle Assembly	3
26	01004081	Flat Pulley	1
27	01004101	Idler Pulley, 4.06 OD	1
28	01004304	Screw, TT, 3/8-16 x .50,	2
29	01005434	Aluminum Spindle Support Plate	3
30	01008542	Hex Cap Screw, 3/4-16, 7.50	2
31	01005388	Hex Cap Screw, 3/4-16, 9.00	1
32	01007499	V-Pulley, 5.75 OD	3
33	02000568	Bahia Blade, 25.0, .756 ID	3
34	01007786	Idler Arm Assembly, Deck	1
	01000308	Bearing Sleeve	2
35	01007908	Idler Arm Assembly, Drive	1
	01000308	Bearing Sleeve	2
36	01007937	V-Belt, B Section x 124.0 LG	1
37	02000611	V-Belt, B Section x 155 LG	1
38	01008018	Spacer, .760 ID x 2.00 OD x .330	3
39	02000583	V-Pulley, 6.95 OD x .750 Bore, Cast	1
40	01008204	Spring Tension Rod	1
41	01008618	Tension Idler U-Bracket	1
42	01008252	Handle Tension Weldment	1
43	01008270	Tension Idler Handle Grip	1
44	01009101	Straight Adapter Fitiing	3
45	01006382	Decal, Idler Location	1
46	01003123	Spacer .812 ID x .268 LG	2

Brake Assembly- Figure 8 and Parts List

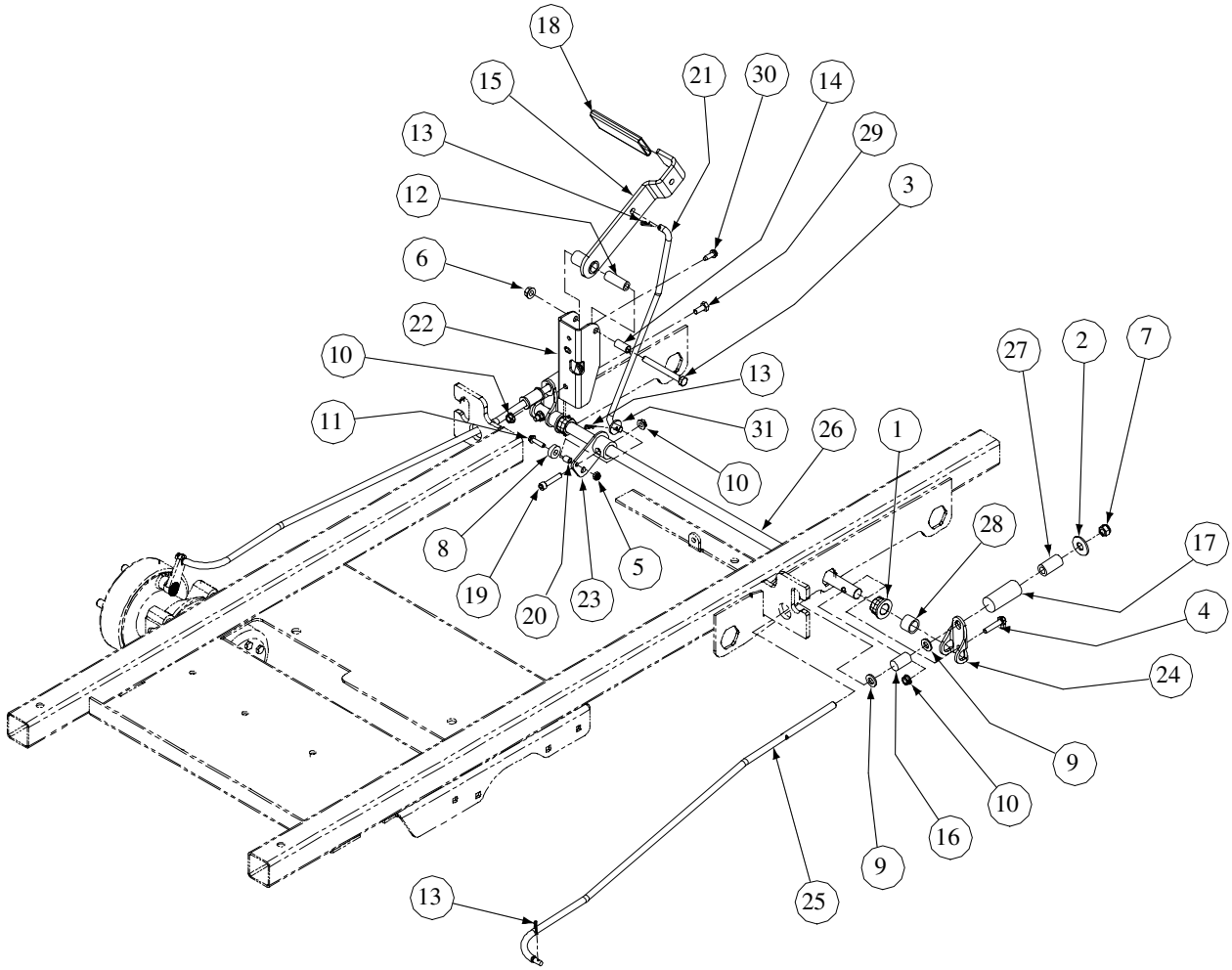

GD: 01009516-05/04/04

Ref. No.	Part No.	Description	Qty.	Ref. No.	Part No.	Description	Qty.
1	741-0598	Hex Flange Bearing, .752 ID	2	17	01003575	Force Brake Spring	2
2	00011459	Flat Washer, 1/2	2	18	01003716	Parking Brake Grip	1
3	01000371	Hex Cap Screw, 3/8-16 x 3-1/4	1	19	01008600	Socket Head CapScrew, 5/16-18 x 1.50	1
4	00012382	Hex Cap Screw, 5/16-18 x 1-1/2	2	20	01008607	Spacer, .375 OD x .257 ID x .438	1
5	00012152	LockNut, 1/4-20, Nylon Insert	1	21	01008886	Brake Rod	1
6	00022560	Flange Lock Hex Nut, 3/8-16	1	22	01008889	Parking Brake Mounting Bracket	1
7	00027279	Nylock Nut, 7/16-14	2	23	01009561	Brake Arm Assembly	1
8	00071691	Spacer, Control Rod	1	24	01009566	Brake Bracket	2
9	01000393	Washer, .469 ID x .875 OD x .105	4	25	01009568	Linkage Brake Rod	2
10	01000635	Hex Flange Lock Nut, 5/16-18	4	26	01009569	Pivot Brake Shaft	1
11	01000897	Self Tapping Screw, 1/4-20 x 1.00	1	27	01009601	Low Pressure Hose	2
12	01002751	Spacer, .39 x .63 x 1.75	1	28	01009602	Spacer, .76 ID x 1.0 OD x .75	2
13	01002771	Cotter Pin, .072 x 1.12 Lg	4	29	00013092	HHCS, 5/16-18 x 1.0	1
14	01003468	Spacer, .375 x .50 x .75 Lg	1	30	01000629	Screw, TT, 1/4-20, 0.75, Hex Index Washer	1
15	01003595	Brake Handle	1	31	01000723	Flat Washer, .406 ID, 1.0 OD, .105	1
16	01003574	Neutral Brake Spring	2				

Fuel Tank Assembly - Figure 9 and Parts List

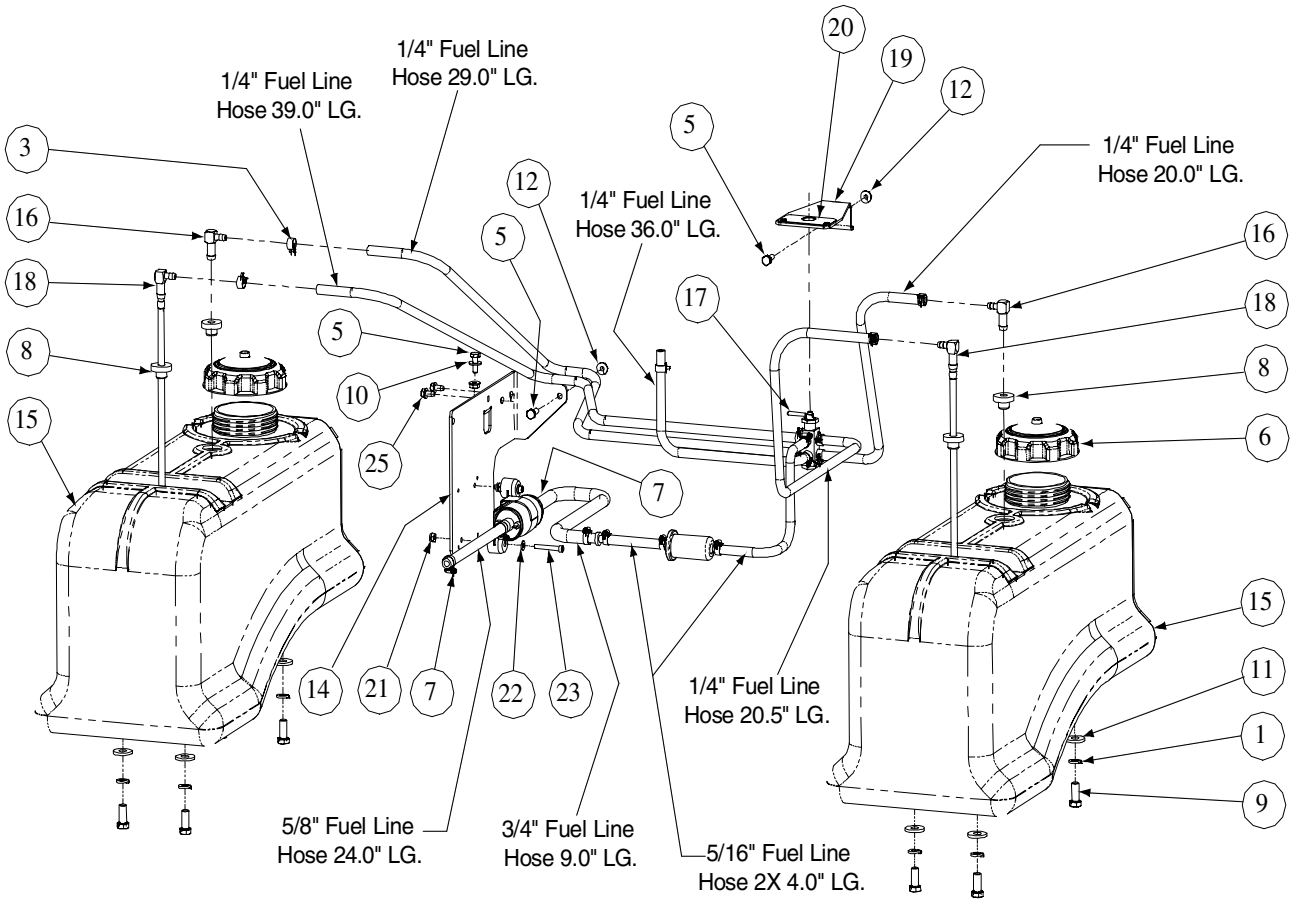

GD: 01009519-10/27/04

Ref. No.	Part No.	Description	Qty.	Ref. No.	Part No.	Description	Qty.
1	00012157	Lock Washer, 3/8	8	14	01009803	Pump Mounting Bracket	1
2	--	Hose, 1/4" Fuel Line (in inches)	144.5	15	01009806	Fuel Tank	2
3	00012235	Clamp, Union	10	16	01009809	Fuel Fitting, Return	2
4	00012470	Cable Tie	6	17	01009812	Shut Off Fuel Valve	1
5	00013131	Hex Cap Screw, 1/4-20 x 3/4	3	18	01009821	Fuel Fitting, Pickup	2
6	01000069	Fuel Cap, 3.5	2	19	01009822	Fuel Valve Mounting Bracket	1
7	01000215	Hose Clamp	8	20	01009824	Decal, Fuel Tank Shut Off	1
8	01000281	Fuel Tank Grommet	4	21	00006194	Nut, 10-24, Nylon Insert	2
9	01000368	Hex, Cap Screw, 3/8-16, .88	8	22	00016771	Washer, 3/16	2
10	00012169	Washer, 5/16	1	23	01009831	Socket Head Screw, 10-24 x 1.25	2
11	01000723	Flat Washer, .406 ID, 1.0 OD, .105	8	24	--	Fuel Hose, .50 ID x .75 OD (in inches)	9
12	01002766	Hex Flange Lock Nut, 1/4-20	3	25	01000628	Self Tapping Screw, 1/4-20 x .50	2
13	--	Fuel Hose, .38 ID x .625 OD (in inches)	24	26	--	Hose, 5/16" Fuel Line (in inches)	8

60" Front Caster Assembly - Figure 10 and Parts List

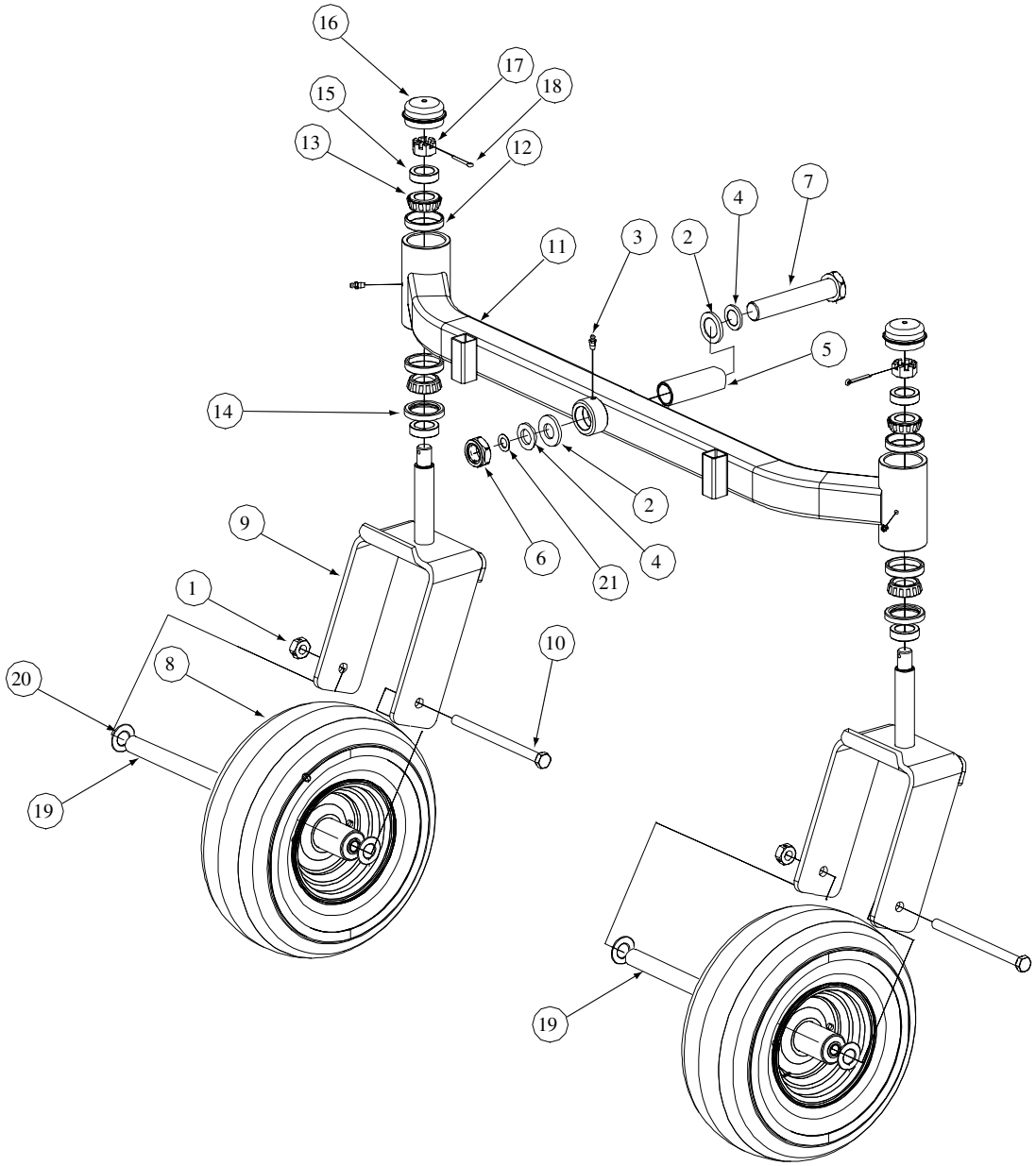

GD: 02000369-10/21/04

Ref. No.	Part No.	Description	Qty.	Ref. No.	Part No.	Description	Qty.
1	00023287	Nut, 1/2-20, Center Lock	2	12	01002620	Cup Bearing	4
2	01006294	Bell Washer, 1.25 ID	2	13	01002621	Bearing Cone	4
3	00060078	Grease Fitting	3	14	01002622	Seal	2
4	02000588	Flat Washer, 1.00 ID	2	15	01002624	Ring Seal	4
5	02000589	Spacer, 1.005 ID x 1.25 OD x 3.6	1	16	01006347	Grease Cap, 1.986 OD	2
6	01000678	Nut, Jam, 1.0-14, Insert Lock	1	17	01002626	Slotted Nut, 3/4-16	2
7	01006309	Hex Cap Screw, 1-14 x 5.0	1	18	01002627	Cotter Pin, 5/32, 1.25	2
8	01006913	Wheel, 13 x 6.50 x 6, White	2	19	01006912	Wheel Spacer	2
9	01007407	Yoke, Caster Wheel	2	20	01003123	Spacer, .812 ID x .218LG	4
10	01006961	HHCS, 1/2-20, 7.50	2	21	01009997	Retainer Extension, Self Locking	1
11	02000439	Front Axle Assembly	1				

72" Front Caster Assembly - Figure 11 and Parts List

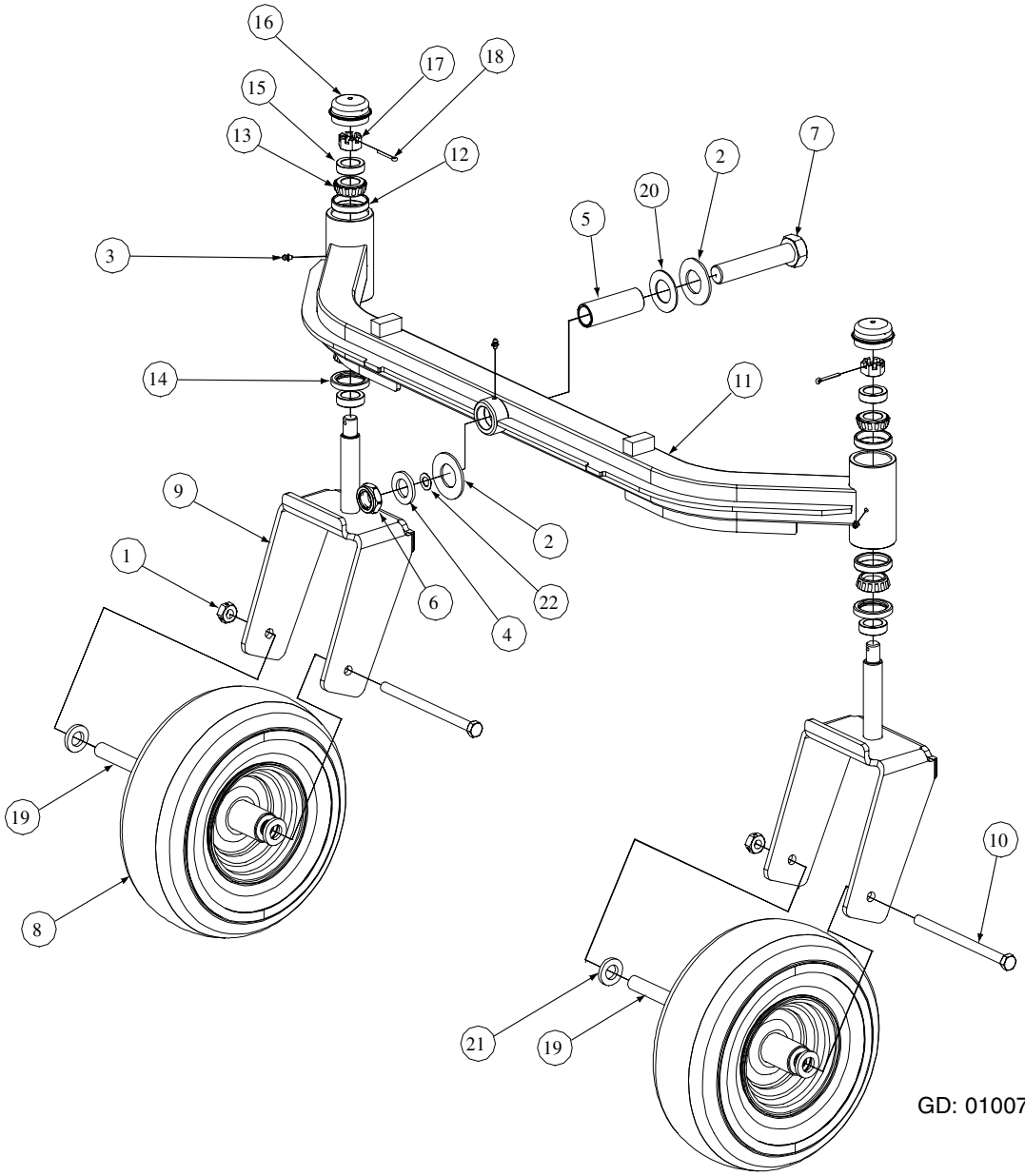

GD: 01007758-03/04/04

Ref. No.	Part No.	Description	Qty.	Ref. No.	Part No.	Description	Qty.
1	00023287	Nut, 1/2-20, Center Lock	2	11	01007760	Front Axle Assembly	1
2	01006294	Bell Washer, 1.25 ID x 2.5 OD x .180	2	12	01002620	Cup Bearing	4
3	00060078	Grease Fitting	3	13	01002621	Bearing Cone	4
4	00023822	Special Washer	1	14	01002622	Seal	2
5	01006310	Spacer, 1.005 ID x 1.25 OD x 3.6	1	15	01002624	Ring Seal	4
6	01000678	Nut, Jam, 1.0-14, Insert Lock	1	16	01006347	Grease Cap, 1.986 OD	2
7	01006309	Hex Cap Screw, 1-14 x 5.0	1	17	01002626	Slotted Nut, 3/4-16	2
8	01006913	Wheel, 13 x 6.50 x 6, White	2	18	01002627	Cotter Pin, 5/32, 1.25	2
--	01007564	Tire	1	19	01006912	Wheel Spacer	2
--		Retainer Flange	2	20	01006408	Flat Washer, 1.25 ID x 2.25 OD x .075	1
--		Roller Bearing	2	21	01003123	Spacer, .812 ID x .218LG	4
9	01007407	Yoke, Caster Wheel	2	22	01009997	Retainer Extension, Self Locking	1
10	01006961	HHCS, 1/2-20, 7.50	2				

60" Wheel Assembly - Figure 12 and Parts List

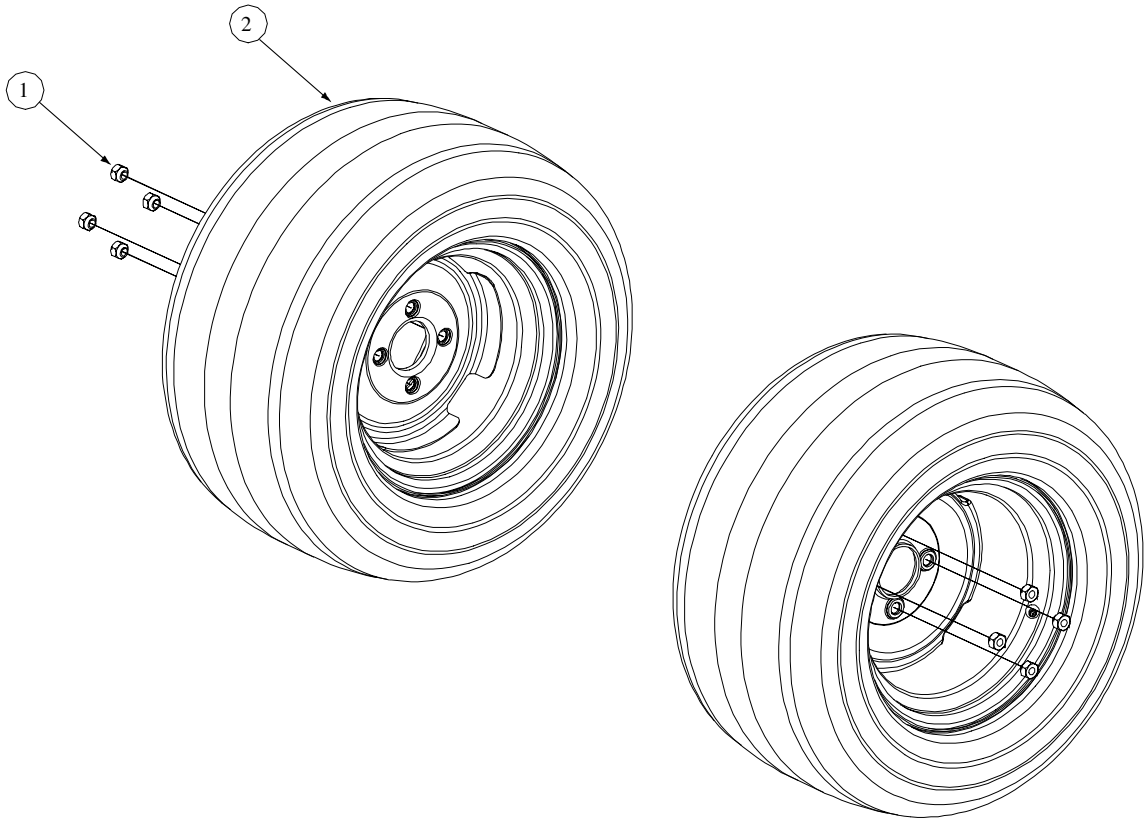

GD: 01002572-09/27/00

Ref. No.	Part No.	Description	Qty.
1	00012187	Lug Nut, 1/2-20	8
2	01002182	Wheel Assembly, 24 x 12-8, Dr, White: Includes	2
	01004473	Tire, Turf Saver, 24 x 12.00-12, 2-Ply	
OPTIONAL TIRES			
	01006324	Turf Master, Rear Wheel Assembly	

Hydro Pump Assembly- Figure 13 and Parts List

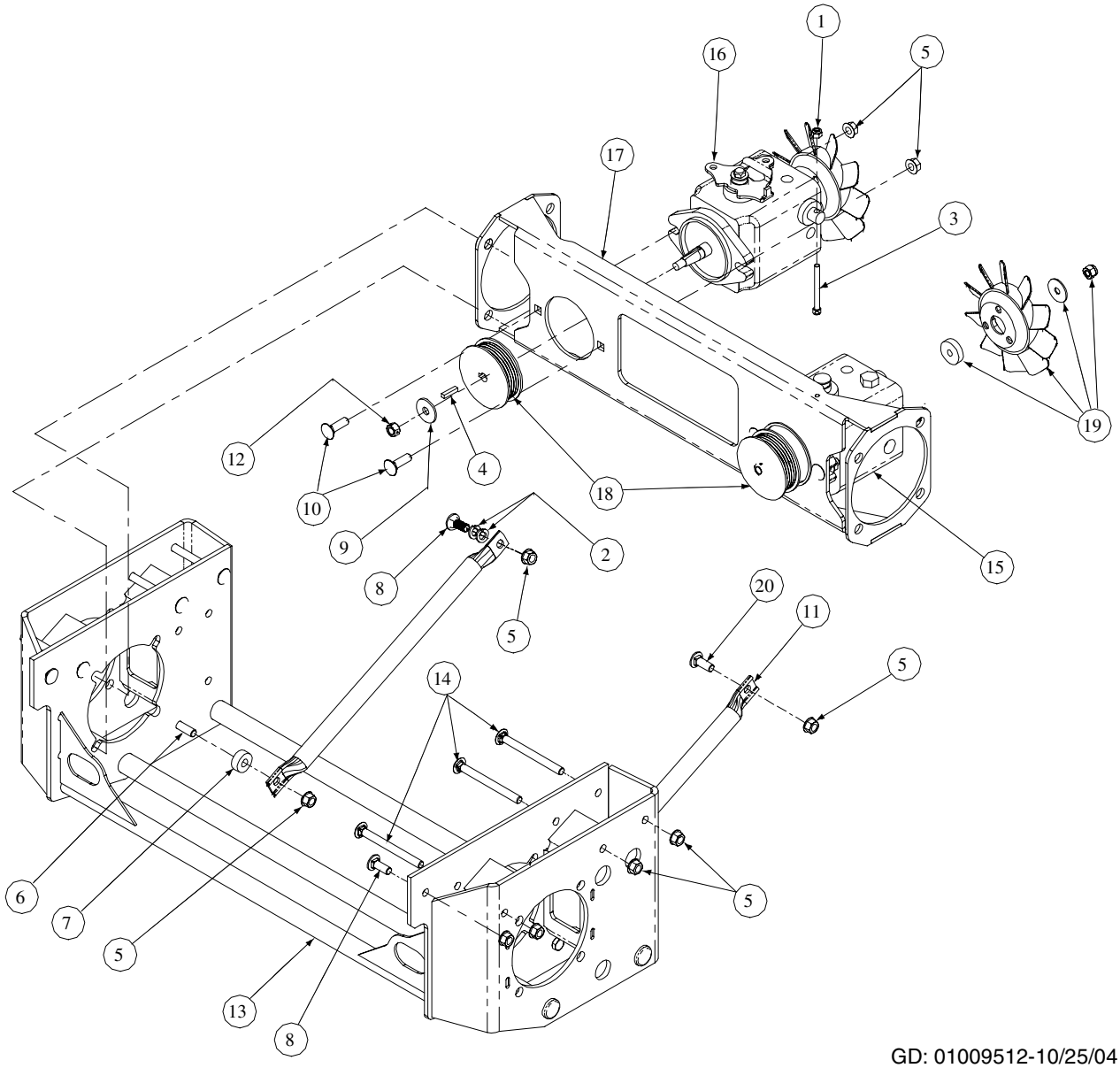

GD: 01009512-10/25/04

Ref. No.	Part No.	Description	Qty.	Ref. No.	Part No.	Description	Qty.
1	00012152	Lock Nut, Nylon Insert, 1/4-20	2	11	01001618	Strut Frame	2
2	00012157	Washer lock 3/8 zinc	2	12	01007309	Hex Nut, 3/8-24	2
3	00070040	Hex Cap Screw, 1/4-20 x 2.00	2	13	01008050	Hydro Motor Frame Assembly	1
4	00020628	Key, 3/16" x 7/8"	2	14	01008049	Carriage Bolt, 3/8-16 x 4.00	6
5	00022560	Flange Lock Hex Nut, 3/8-16	16	15	01009531	Hydro Pump, RH	1
6	01000369	Hex Cap Screw, 2/8 -16 x 1.25	2	16	01009532	Hydro Pump, LH	1
7	01000397	Spacer, .406 ID x 1.00 OD x .38	2	17	01009582	Hydro Pump Mounting Weldment	1
8	01000643	Carriage Bolt, 3/8-16 x 1	3	18	01009593	Hydro Pulley Pump	2
9	00012158	Flat Washer, 3/8	2	19	01009631	Kit, Fan BDP	2
10	01002010	Carriage Screw, 3/8-16 x 1.25	4	20	01000372	Carriage Bolt, 3/8-16 x .75	1

Control Assembly- Figure 14

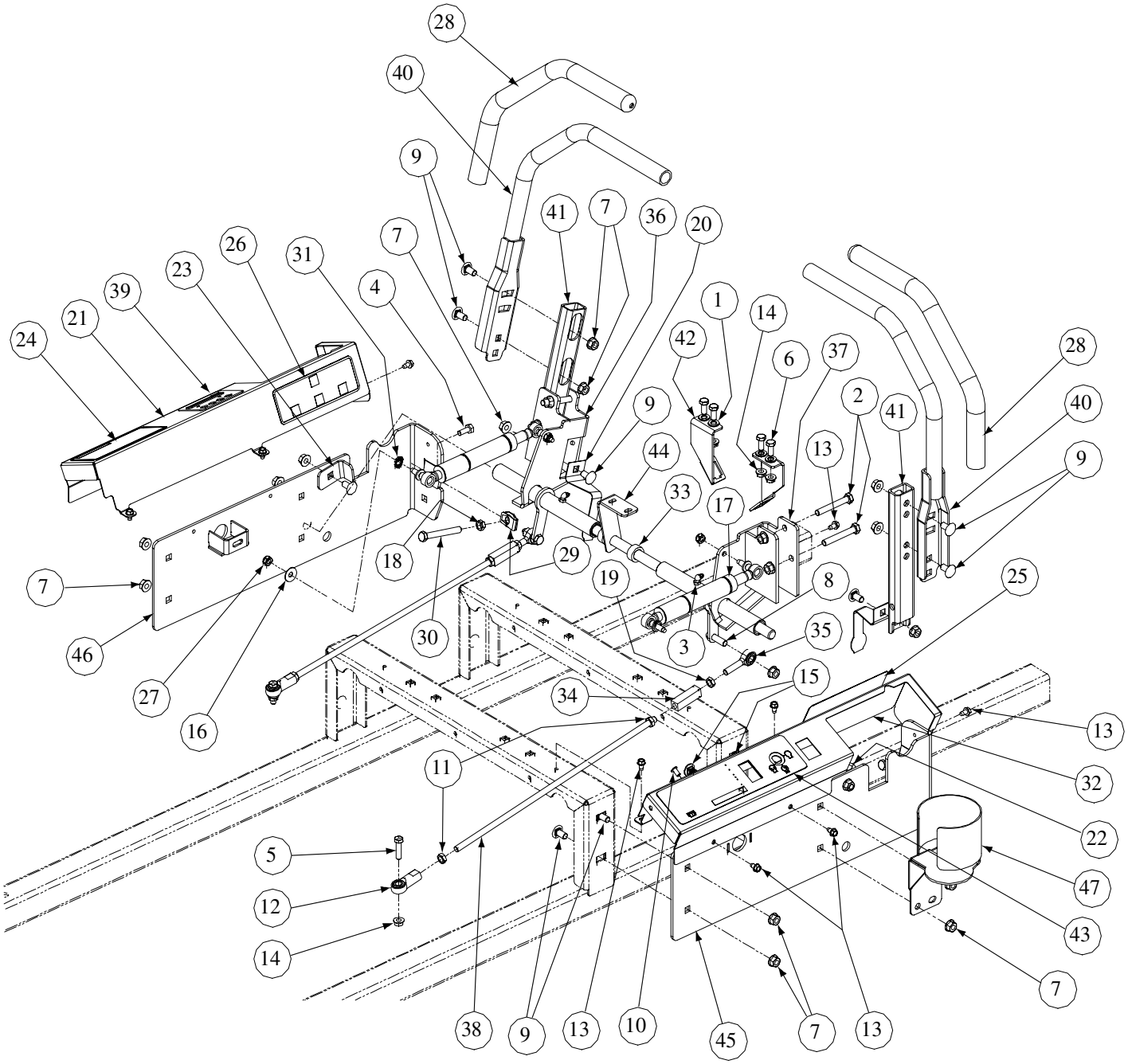

GD: 02000576-10/22/04

Control Assembly - Parts List for Figure 14

Ref. No.	Part No.	Description	Qty.	Ref. No.	Part No.	Description	Qty.
1	00009812	Flat Washer, 5/16	4	26	01003452	Decal, Left Hand Control	1
2	00011861	HHCS, 3/8-16, 2.50	4	27	01003561	Nut, Hex, Center Lock, M8	4
3	00012226	Grease Fitting, 1/4-28, 90°	2	28	01003715	Grip, 1.0	2
4	00013092	HHCS, 5/16-18 x 1.0	1	29	01003947	U-Nut, 3/8-16, .75	2
5	00013116	HHCS, 5/16-18 x 1.25	2	30	01004127	HHCS, 3/8-16, 3.00	2
6	00013406	Hex Cap Screw, 5/16-18 x .75	4	31	01005851	External Washer, 3/8	2
7	00022560	Hex Nut, 3/8-16, Lock Flange	23	32	01004890	Control Panel, RH	1
8	01000369	HHCS, 3/8-16 x 1.25	2	33	01006350	Shaft Collar	2
9	01000372	Carriage Bolt, 3/8-16 x .75	15	34	01007734	Turnbuckle	2
10	01000443	Screw Button Head, 1/4-20 x .5	1	35	01008367	B/Joint, 3/8-24, Left Hand Female	2
11	01000450	Hex Jam Nut, 3/8-24	4	36	01009552	Bracket Assembly, Control LH Bearing	1
12	01000451	B/Joint, 3/8-24, Right Hand Female	2		01004265	Bearings	2
13	01000628	Screw, TT, 1/4-20, 0.5, Hex Index Washer	12	37	01009553	Bracket Assembly, Control RH Bearing	1
14	01000635	Nut, Lock, HexFlange, 5/16-18	7		01004265	Bearings	2
15	01000643	Carriage Bolt, 3/8-16 x 1	2	38	01009560	Control Rod	2
16	01000960	Belle Washer, .325 x .930 x .045	2	39	01009599	Plate, Light Indicator	1
17	01001727	Cylinder Return to Neutral	2	40	01010190	Lapbar Handle Assembly	2
18	01002511	Nut, 3/8-16, Jam	2	41	01010176	Mounting Handle	2
19	01002986	Nut, 3/8-24, Jam, LH Third	2	42	02000164	Switch Mounting Bracket, Lapbar	2
20	01003011	Lever, Safety Switch	2	43	02000163	Decal , Right Hand Console	1
21	01004889	Control Panel, LH	1	44	02000175	Shaft Control Brake Steering	1
22	01003199	Stop, RH	1	45	02000178	Side Panel, Control, Right	1
23	01003200	Stop, LH	1	46	02000179	Side Panel, Control, Left	1
24	01003450	Decal, Left Hand Console	1	47	02000340	Cup Holder Assembly	1
25	01003451	Decal Right Hand Control	1				

Seat Assembly- Figure 15 and Parts List

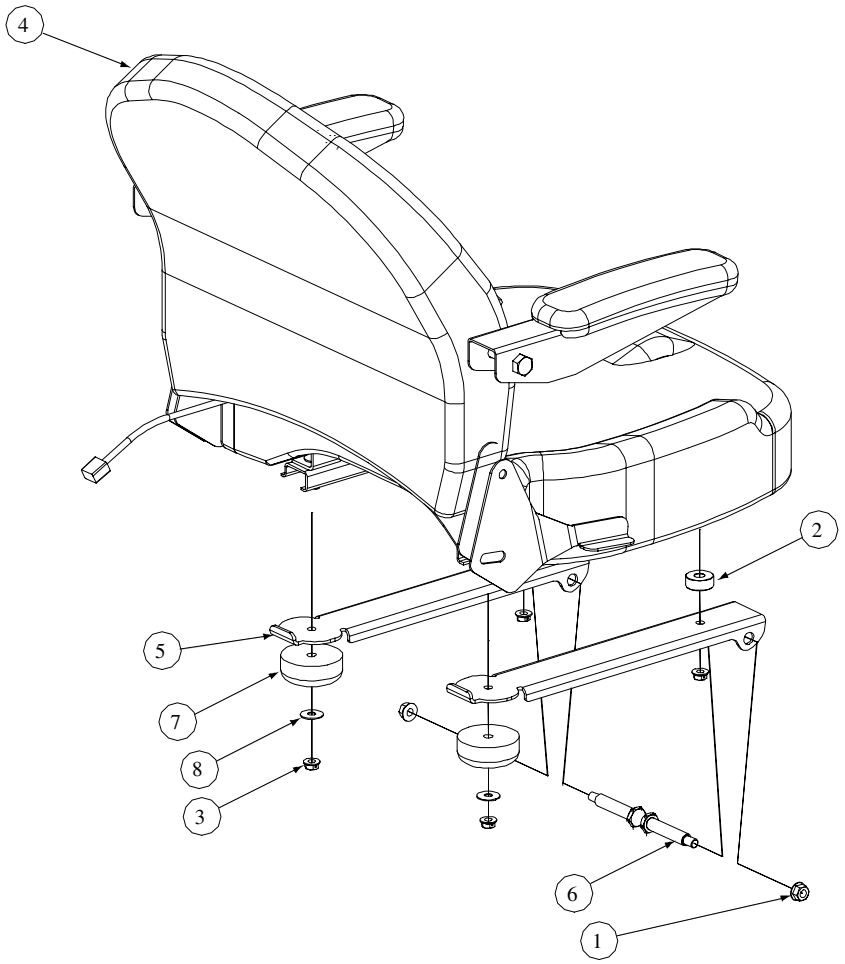

GD: 02000575-12/01/04

Ref. No.	Part No.	Description	Qty.
1	00022560	Nut, Hex 3/8-16 Flange Lock	2
2	01000937	Spacer, 0.345 ID x 1.50 OD x .41	2
3	01000635	Lock Nut, Hex Flange, 5/16-18	4
4	01010115	Adjustable Seat, Black embossed, Includes Seat Switch	1
5	02000552	Mounting Bracket, Seat w/ Stop	2
6	01002634	Shoulder Screw, .50x2.345, 3/8-16	2
7	01002753	Grommet, 2.5 OD x 1.0 Long	2
8	01000960	Washer	2

29HP Kawasaki Engine Assembly- Figure 16 and Parts List

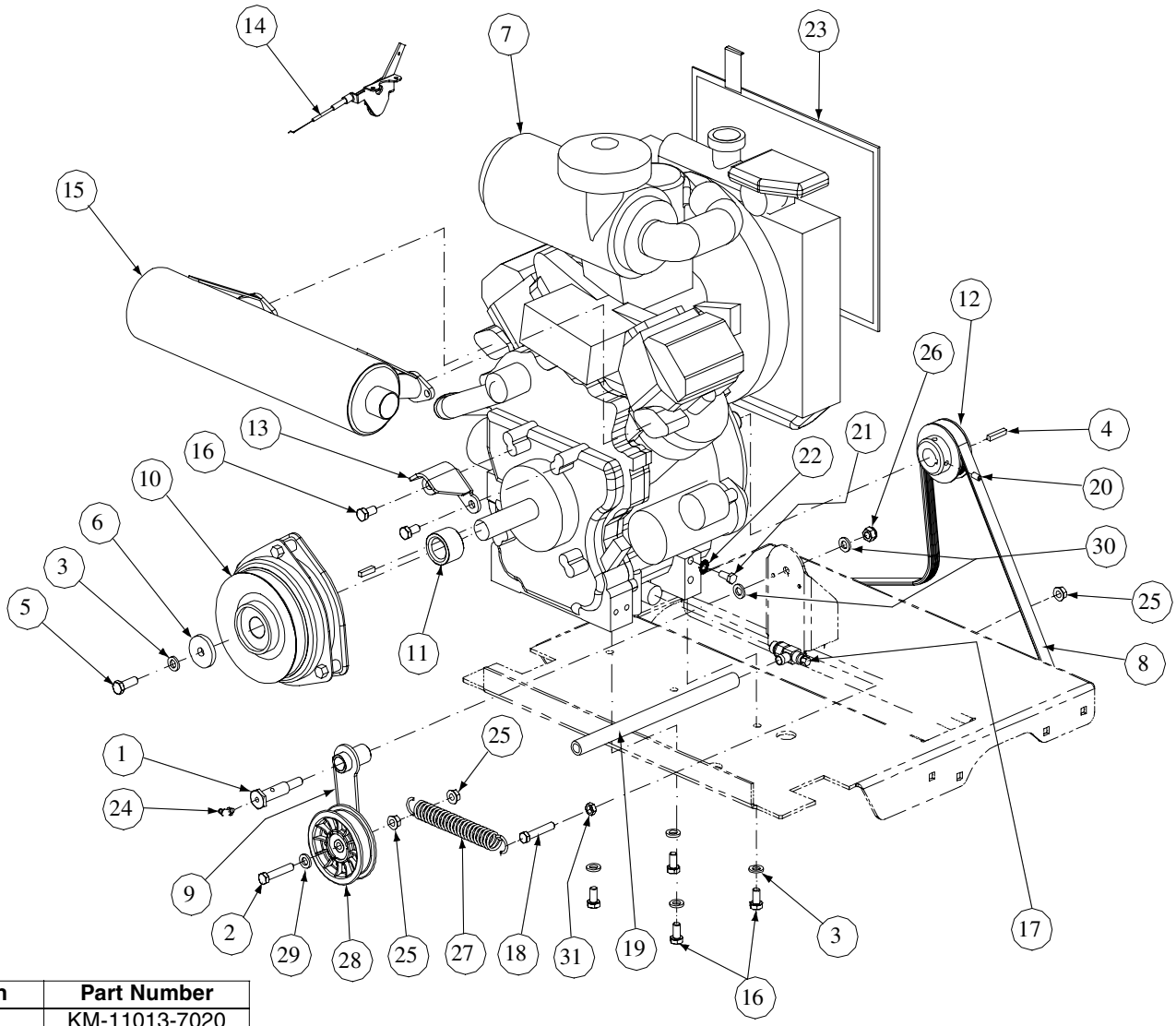

Description	Part Number
Air Filter	KM-11013-7020
Air Filter (Inner)	KM-11013-7019
Fuel Filter	KM-49019-1055
Oil Filter	KM-49065-2078
Spark Plug	KM-BPR4ES

GD: 01009509-12/01/04

Ref. No.	Part No.	Description	Qty.	Ref. No.	Part No.	Description	Qty.
1	01000505	Shoulder Screw, 7/16-14	1	17	01009621	Oil Valve	1
2	01001366	Hex Cap Screw, 3/8-16 x 2.25	1	18	01000369	Hex Cap Screw, 3/8-16 x 1.25	1
3	01000389	Lock Washer, 7/16	5	19	01006223	Oil Drain Extension Hose	1
4	00021517	Key Stock, 1/4 x 1/4 x 2.00	1	20	01002500	Set Screw, 5/16-18	2
5	01002885	Hex Head Cap Screw, M10 x 1.5, 30mm	1	21	01000981	Hex Head Cap Screw, M10 x 1.25, 20mm	2
6	01005314	Flat Washer, 7/16 ID x 1.75 OD x .25	1	22	01005851	Washer, 3/8 ID, External Tooth	2
7	01009525	29HP Digital Fuel Injection Engine, Kawasaki	1	23	01009634	Screen, Kawasaki 29HP Radiator	1
8	02000408	V Belt	1	24	00012226	Grease Fitting, 1/4-28 90 Degree	1
9	02000305	Idler Arm Assembly	1	25	00022560	Nut, 3/8-16, Hex Flange Lock	3
10	01009590	Clutch Brake	1	26	00027279	Nut, 7/16-14, Nylock	1
11	01009591	Spacer, 1.75 OD x 1.135 ID x 1.125	1	27	01000199	Extension Spring, 1.0 OD x 5.00	1
12	01009594	Pulley, 3.05 OD x 1.0 Bore	1	28	02000302	Idler Pulley, 3.5 OD	1
13	01009596	Clutch Retainer Bracket	1	29	00083192	Washer, 3/8	1
14	01009603	Throttle, Control Cable, 47.0	1	30	01000393	Washer, .469 ID x .875 OD x .105	2
15	01009614	Muffler, 29HP Horizontal, Kawasaki	1	31	01002511	Jam Nut, 3/8-16	1
16	01009616	Hex Head Cap Screw, M10 x 1.5, 20mm	6				

29HP Electrical Assembly Kawasaki- Figure 17 and Parts List

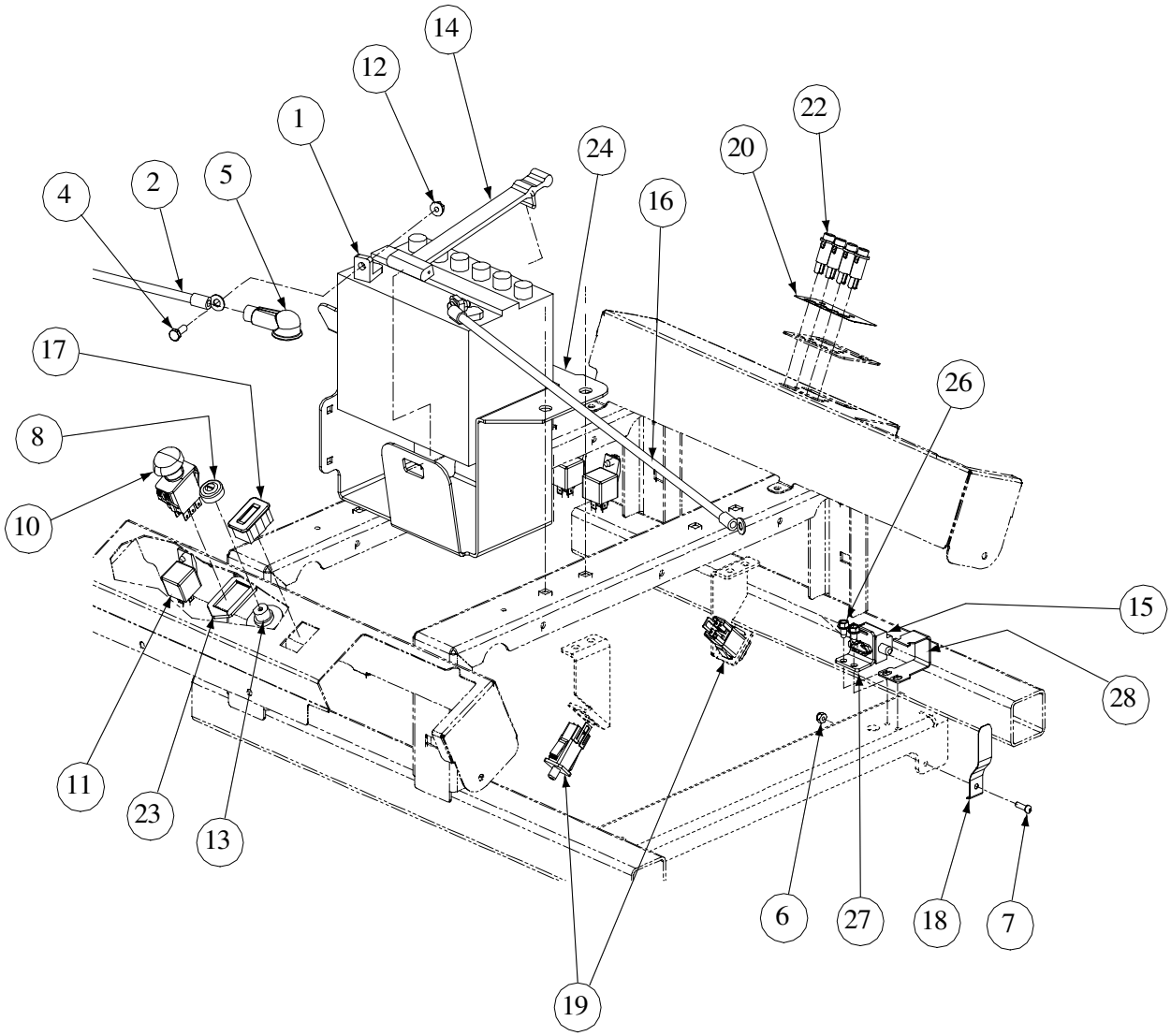

Fasten relay (01002251) with self-tapping screw (01000443) on LH control panel shown in Fig. 10.

GD: 02000574-10/22/04

Ref. No.	Part No.	Description	Qty.	Ref. No.	Part No.	Description	Qty.
1	00012032	Battery, 12V 225CCA 30 Min	1	15	02000165	Switch, Plunger	1
2	00012289	Cable, Battery, Red, 36"	1	16	01009623	Cable, Battery Black, 34"	1
3	00012470	Tie, Cable, 3/16 x .05 x 7.4"	4	17	01005389	Meter, Hour	1
4	00013131	Screw, Hex, Cap, 1/4-20 x .75	2	18	01008042	Spring Retainer	1
5	00013258	Boot, 1" OD Rubber Battery-PST, Red	1	19	02000024	Neutral Switch	2
6	00014608	Nut, Lock, Nylon Insert, #10-32	1	20	01009619	Decal, Engine Light	1
7	00030906	Screw, Phillips Head, Machine, 10-32 x 5/8	1	21	02000587	Harness Assembly (not shown)	1
8	00032097	Nut, W/Cap, 5/8-32 Ignition	1	22	01009816	Light Indicator, 12V	4
9	01001811	Hourmeter, Harness (not shown)	1	23	01009905	Bracket, PTO Switch Retainer	1
10	01002111	Switch, Electric, PTO	1	24	01009995	Mount Bracket, Battery	1
11	01002251	Relay, 12V 40A	3	25	01009921	Adaptor (not shown)	1
12	01002766	Hex Flange Lock Nut, 1/4-20	2	26	01000628	Self Tapping Screw, 1/4-20 x .50	2
13	01003581	Switch, Ignition, 6 Pin	1	27	02000349	Bracket, Plunger Switch	1
14	01003649	Strap, Battery	1	28	02000348	Clamp, Plunger Switch	1

Brake Motor Mount and Hub- Figure 18 and Parts List

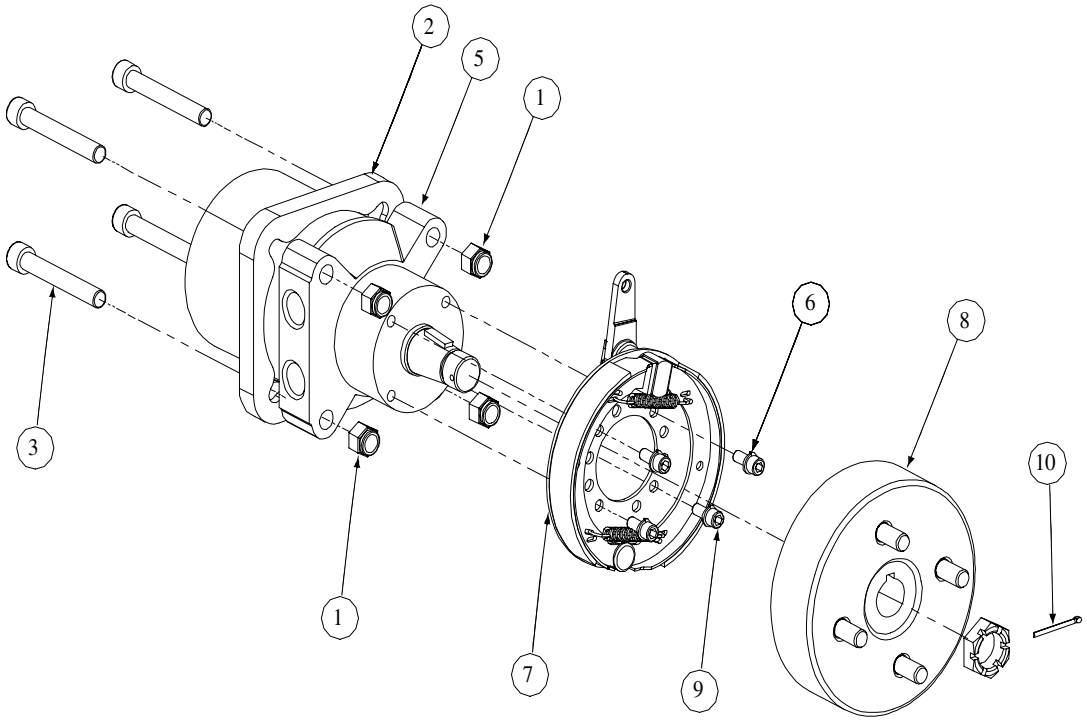

GD: 01008055-11/17/04

Ref. No.	Part No.	Description	Qty.
1	00012428	Lock Nut, Nylon Insert, 1/2-13	8
2	01009775	Motor Spacer	2
3	01008449	Socket Head Capscrew, 1/2-13; 6-1/2	8
4	01008436	Hyd. Motor, Parker Left Hand Assembly w/ Brake & Drum (Not Shown)	1
5	01008437	Hyd. Motor, Parker Right Hand Assembly w/ Brake & Drum	1
6	00012168	Lock Washer, 5/16	8
7	01007048	Brake Assembly w/Line	2
8	01007049	Hub and Drum Assembly w/Studs	2
9	01007464	Capscrew w/Socket, 5/16-18 x 3/4	8
10	01007773	Cotter Pin 1/8 x 1-1/2	2

60" Lift Assembly - Figure 19

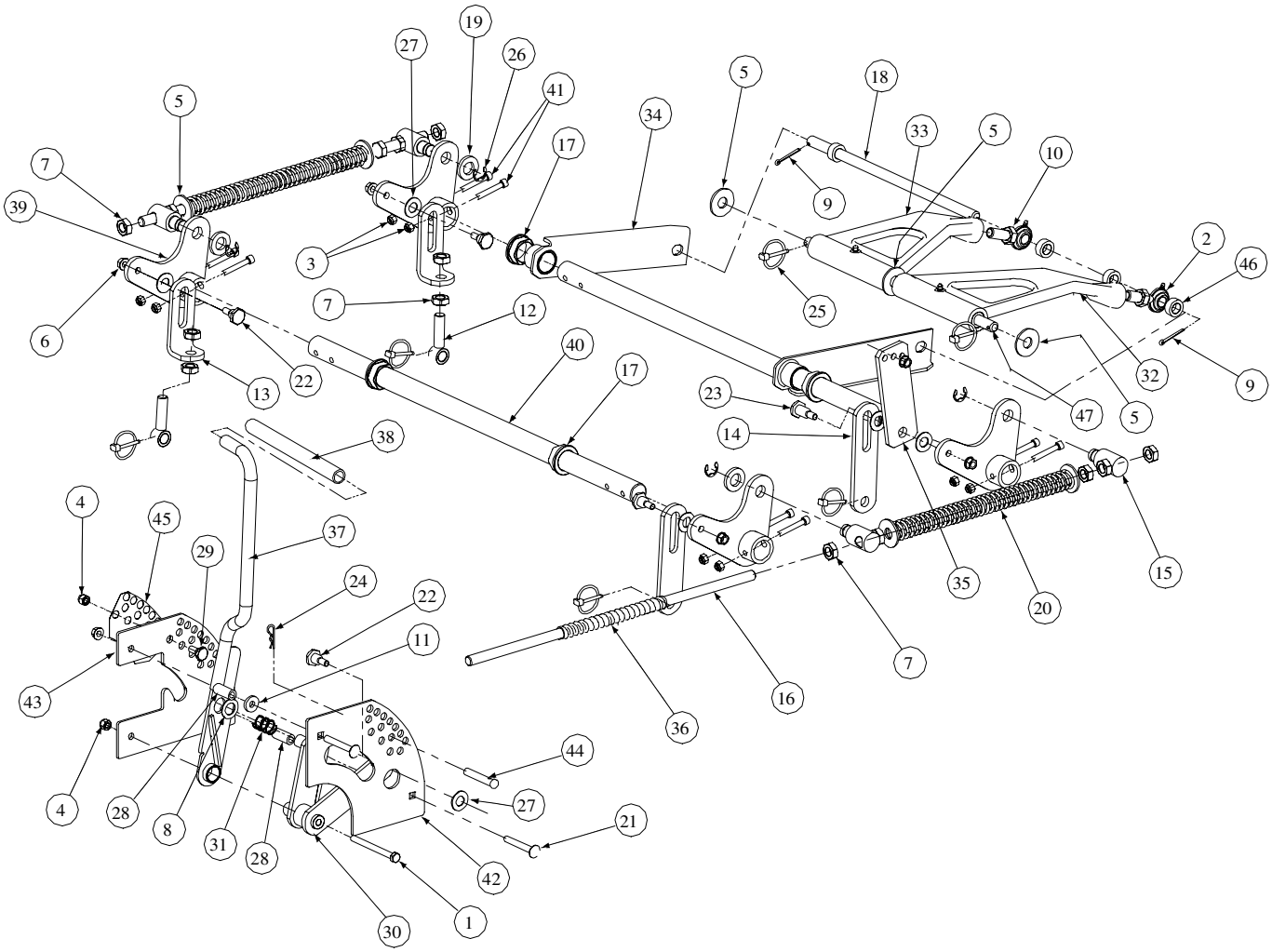

GD: 01008452-11/22/03

60" Lift Assembly - Parts List for Figure 19

Ref. No.	Part No.	Description	Qty.
1	00011925	Hex Cap Screw, 3/8-16, 3.75	1
2	01007487	Rod End, Male	2
3	00012165	Nut, 5/16-18, Nylock	8
4	00012173	Nylock Insert Lock Nut, 3/8-16	2
5	00013432	Flat Washer, 5/8	7
6	00022560	Hex Nut, Flange Lock, 3/8-16	7
7	00035632	Jam Nut, 5/8-11	14
8	00060017	Flat Washer, .06, .776, 1.25	1
9	00060018	Cotter Pin, 3/16 x 1-1	2
10	01007526	Jam Nut, 5/8-18	2
11	00083192	Idler Washer	1
12	01001744	Eye Bolt, 5/8ID	2
13	01004917	Eye Bolt Mount Link, 5/8 ID	2
14	02000562	Deck Link	2
15	01001855	Ferule Lift	4
16	01001857	Lift Connector Rod	2
17	01001930	Hex Flange Bearing, 1.25 ID	4
18	01002586	Front Lift Link, Rod Mount	1
19	01003123	Spacer, .812 ID x .268 Lg.	3
20	01003318	Lift Compression Spring	2
21	01003534	Carriage Bolt, 3/8-16, 2.75	2
22	01003535	Shoulder Screw, 0.625 OD x .437 Lg.	4
23	01003536	Shoulder Screw, 0.625 OD x .830 Lg.	1
24	01003537	Cotter Pin, .148 x 3.00	1
25	01003993	Linch Pin, 3/16 Dia.	6
26	01003994	E Clip, 3/4 Dia.	4
27	01004003	Nylon Flat Washer, 5/8	6
28	01004080	Spacer, .39 ID x .63 OD x 1.442	2
29	01004118	Shoulder Screw, .50 OD x 0.27	1
30	01004968	Lift Pivot Assembly	1
31	01004971	Lift Handle Spring	1
32	01007804	Bearing Lift Brace Assembly, Right Hand	1
33	01007802	Bearing Lift Brace Assembly, Left Hand	1
34	01005569	Front Frame Strut Assembly	2
35	01006365	Lift Link Adjustment	1
36	01006823	Hose, 5/8 ID 13/16 OD, 8" LG	2
37	01007469	Lift Handle Assembly	1
38	01007561	Lift Handle Grip	1
39	01008207	Bellecrank Weldment Assembly	4
40	01007681	Deck Lift Shaft	2
41	01007962	Socket Head CapScrew, 5/16-18 x 2	8
42	01008627	Outer Lift Index Plate	1
43	01008628	Inner Lift Index Plate	1
44	01008652	Clevis Pin, .438 Dia. x 2.625 Lg.	1
45	01008671	Decal Height Indicator	1
46	01007527	Spacer, .630 ID x 1.06 OD x .440	4
47	01008453	Lift Link Rod	1

72" Lift Assembly - Figure 20

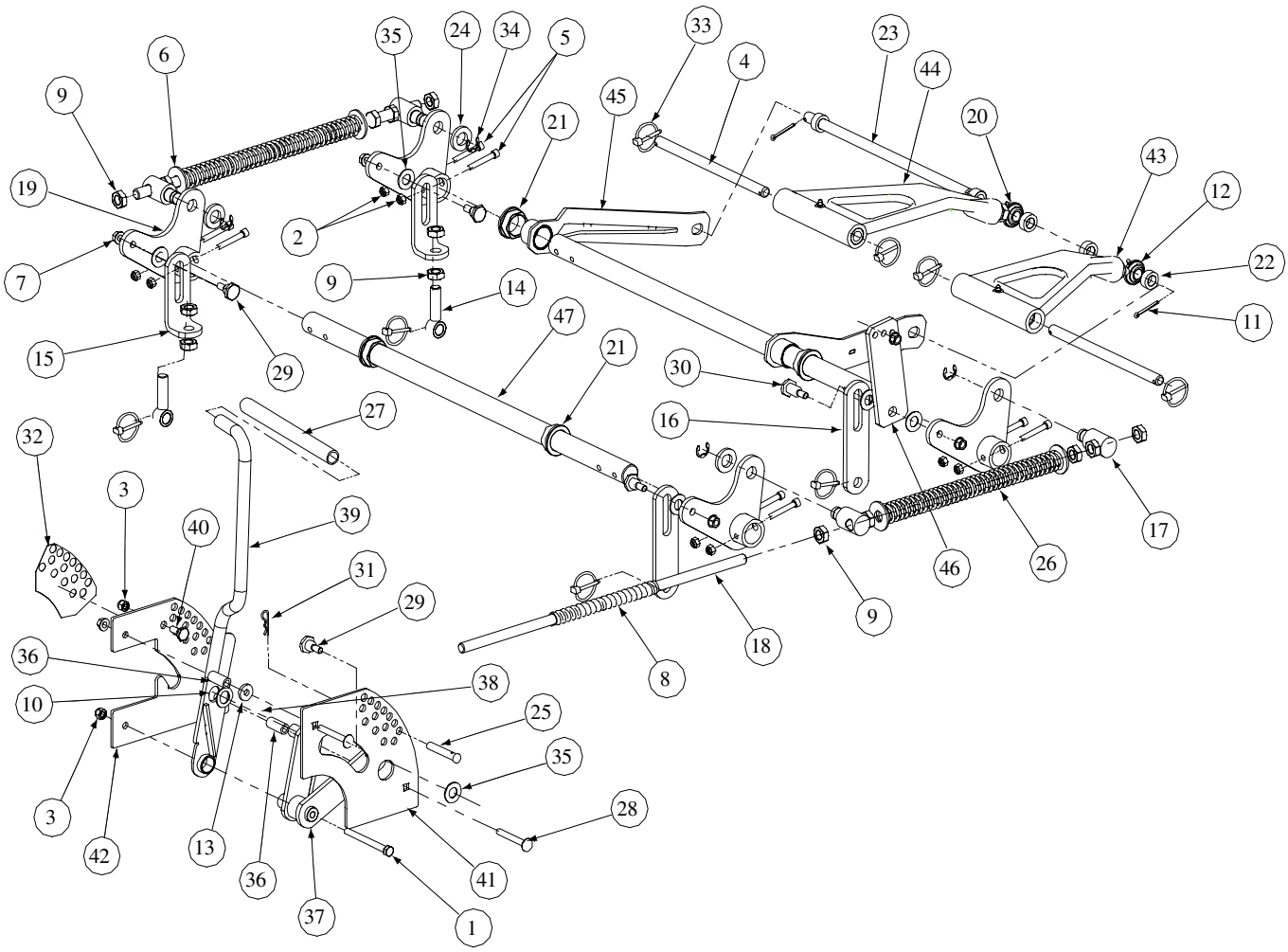

GD: 01007799-11/22/04

72" Lift Assembly - Parts List for Figure 20

Ref. No.	Part No.	Description	Qty.
1	00011925	Hex Cap Screw, 3/8-16, 3.75	1
2	00012165	Nut, 5/16-18, Nylock	8
3	00012173	Nylock Insert Lock Nut, 3/8-16	2
4	01007544	Deck Lift Link Rod	2
5	01007962	Socket Head Screw, 5/16-18 x 2	8
6	00013432	Flat Washer, 5/8	4
7	00022560	Hex Nut, Flange Lock, 3/8-16	7
8	01006823	Hose, 5/8 ID 13/16 OD, 8" LG	2
9	00035632	Jam Nut, 5/8-11	14
10	00060017	Flat Washer, .06, .776, 1.25	1
11	00060018	Cotter Pin, 3/16 x 1-1	2
12	01007487	Male Rod End, Right Hand	2
13	00083192	Idler Washer	1
14	01001744	Eye Bolt, 5/8ID	2
15	01004917	Eye Bolt Mount Link, 5/8 ID	2
16	02000562	Deck Link	2
17	01001855	Ferule Lift	4
18	01001857	Lift Connector Rod	2
19	01008207	Bellecrank Weldment Lift	4
20	01007526	Jam Nut, 5/8-18	2
21	01001930	Hex Flange Bearing, 1.25 ID	4
22	01007527	Spacer, .630 x 1.06 x .440	4
23	01002586	Front Lift Link, Rod Mount	1
24	01003123	Spacer, .812 ID x .218 Lg.	3
25	01008652	Clevis Pin, .437 Dia. x 2.625 Lg.	1
26	01003318	Lift Compression Spring	2
27	01007561	Lift Handle Grip	1
28	01003534	Carriage Bolt, 3/8-16, 2.75	2
29	01003535	Shoulder Screw, 0.625 OD x .437 Lg.	4
30	01003536	Shoulder Screw, 0.625 OD x .830 Lg.	1
31	01003537	Cotter Pin, .148 x 3.00	1
32	01008671	Decal Height Indicator	1
33	01003993	Linch Pin, 3/16 Dia.	8
34	01003994	E Clip, 3/4 Dia.	4
35	01004003	Nylon Flat Washer, 5/8	6
36	01004080	Spacer, .39 ID x .63 OD x 1.442	2
37	01004924	Lift Pivot Assembly	1
38	01004971	Lift Handle Spring	1
39	01007469	Lift Handle Assembly	1
40	01004118	Shoulder Screw, .50 OD x 0.270, 3/8-16	1
41	01008627	Outer Lift Index Plate	1
42	01008628	Inner Lift Index Plate	1
43	01007804	Trail Link Assembly, w/ brg Right Hand	1
44	01007802	Trail Link Assembly, w/ brg Left Hand	1
45	01008209	Front Frame Strut Assembly	2
46	01006365	Lift Link Adjustment	1
47	01007681	Deck Lift Shaft	2

Foot Pedal Deck Lift Assembly - Figure 21 and Part List

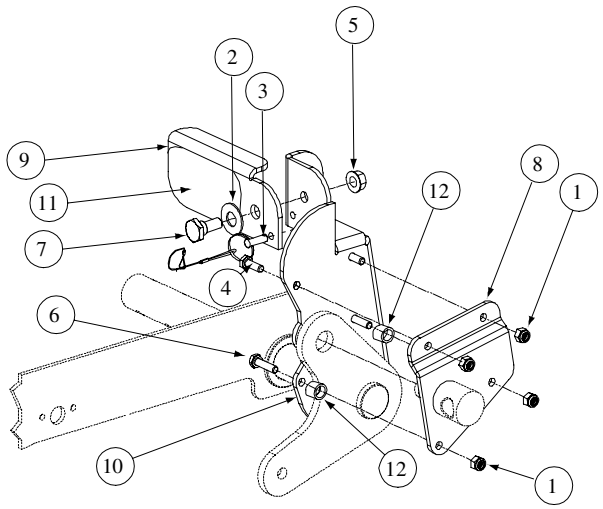

GD: 01008360-05/06/03

Ref. No.	Part No.	Description	Qty.
1	00012152	Lock Nut, Nylon Insert, 1/4-20	4
2	00012577	Washer, 1/2 x 1 Shim	1
3	01006786	Detent Pin w/12" Lanyard	1
4	00013131	Hex Cap Screw, 1/4-20, .75	2
5	00022560	Hex Nut, Flange Lock 3/8-16	1
6	01000944	Hex Cap Screw, 1/4-20, 1.00	2
7	01004118	Shoulder Screw, .50 x .27 Lg., 3/8-16	1
8	01006409	Foot Lift Backup Pedal	1
9	01006352	Deck Foot Pedal Lift	1
10	01008359	Deck Foot Pedal Lift	1
11	01006418	Deck Foot Lift Pad	1
12	00062715	Turnbuckle Sleeve	2

Floor Panel Assembly- Figure 22 and Parts List

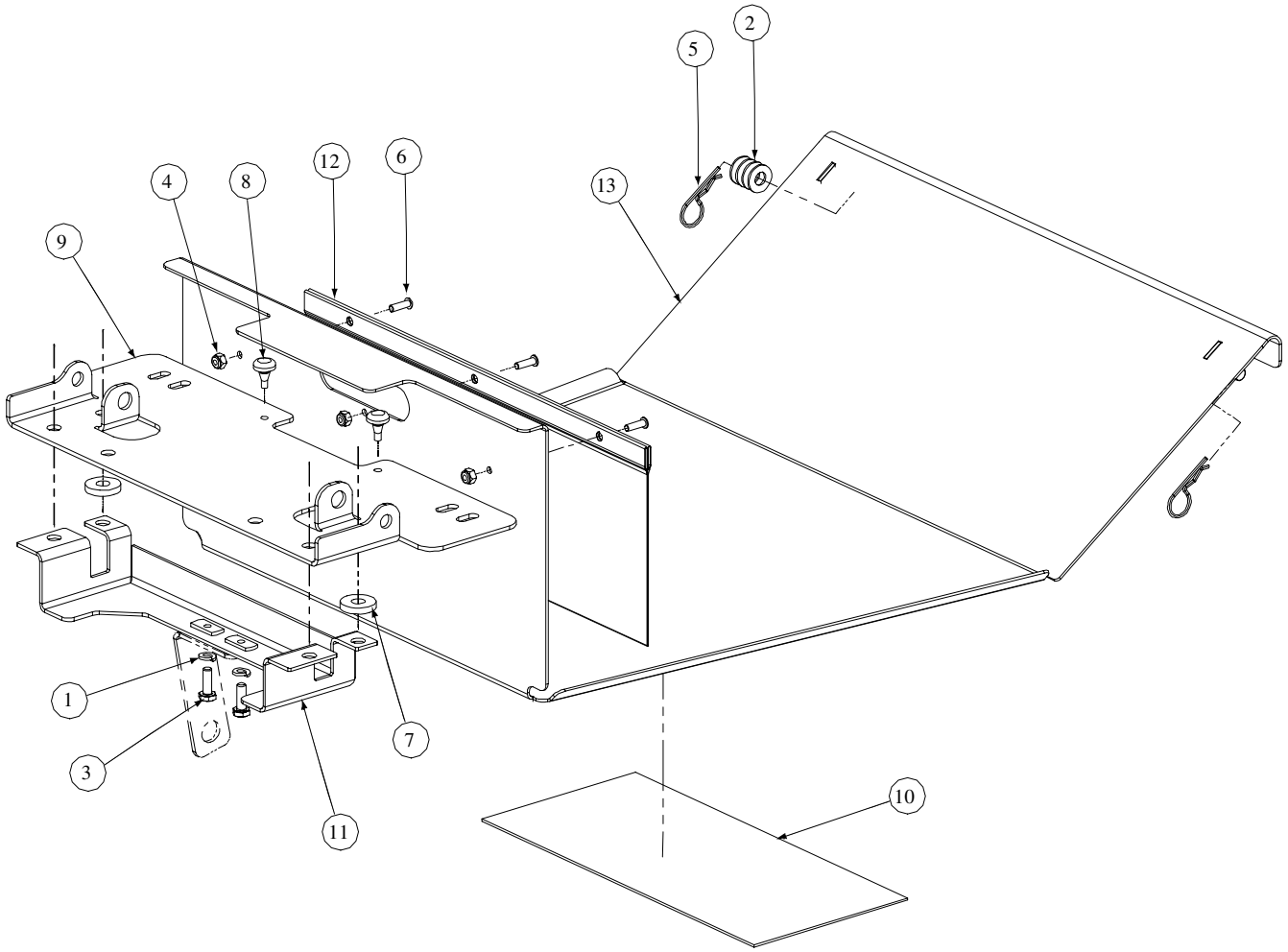

GD: 02000360-10/21/04

Ref. No.	Part No.	Description	Qty.
1	00012132	Lock Washer, 1/4	2
2	00012158	Washer	AR
3	00013131	Hex Cap Screw, 1/4-20, .75	2
4	00014608	Lock Nut, Nylon Insert, 10-32	3
5	00021956	Hair Pin, 3/8-1/2	2
6	00030906	Screw, Phillips Head, Machine, 10-32 x 5/8	3
7	00083192	Washer	2
8	01001170	Rubber Bumper, .62 OD x .22 Thick	2
9	01001638	Panel Seat	1
10	01004992	Label, Belt Routing and Lubrication	1
11	02000361	Support, Seat Bracket	1
12	02000362	Bag, Debris Storage	1
13	02000433	Floor Panel Assembly	1



Cub Cadet Commercial
P.O. Box 368023
Cleveland, OH 44136

Form No. 02000579 Rev. 05-0 01/15/2005