Cub Cadet COMMERCIAL

# Hydrostatic Zero-Turn Commercial Riding Mower

***Professional Turf Equipment***

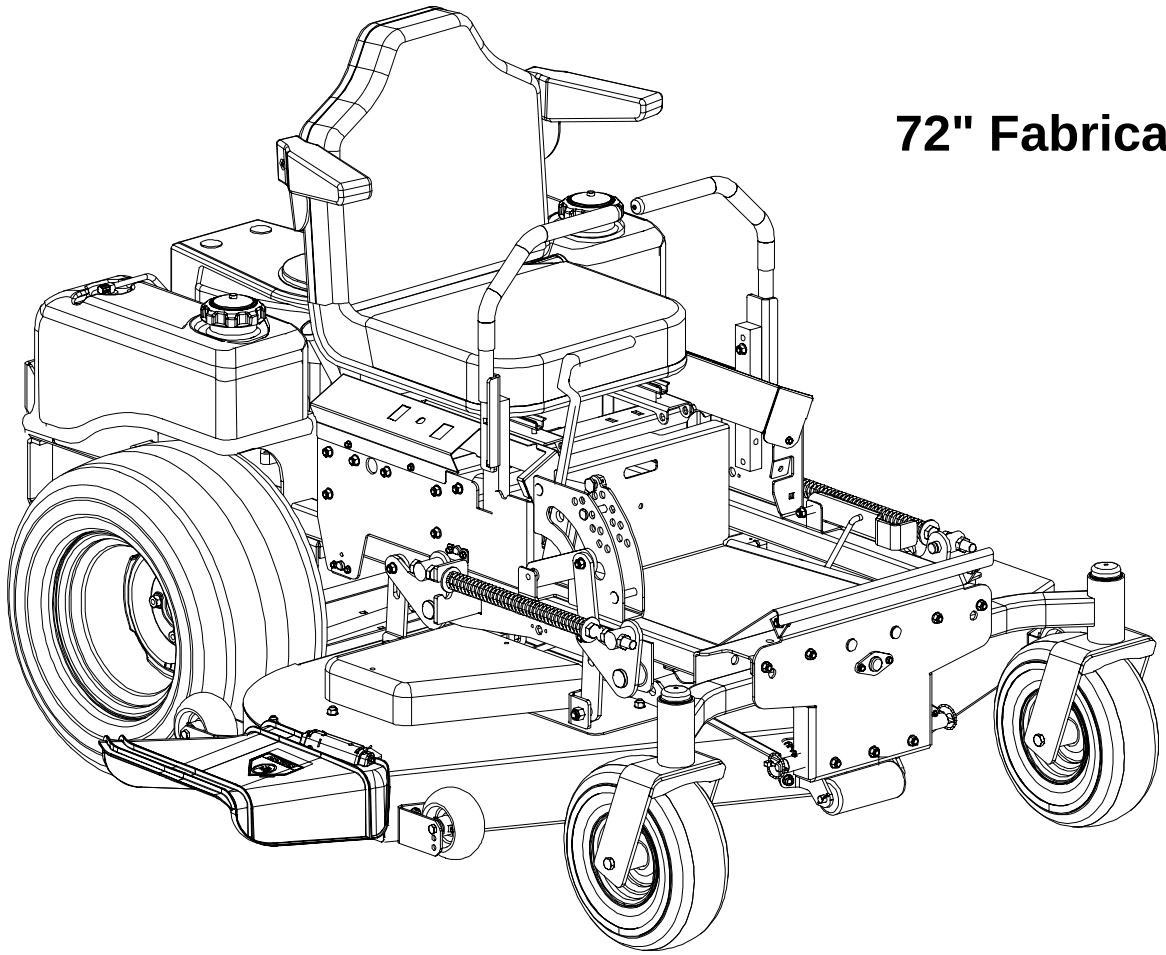

**72" Fabricated Deck**

# ILLUSTRATED PARTS LIST

# TABLE OF CONTENTS


Frame Assembly . . . . . 3
72" Fabricated Cutter Deck. . . . . 4 and 5
72" Spindle Assembly. . . . . 6 and 7
Hydro Tank and Hose Assembly. . . . . 8
Brake Motor Mount and Hub. . . . . 9
Brake Assembly . . . . . 10 and 11
Fuel Tank Assembly . . . . . 12
Rear Bumper . . . . . 13
Front Caster Assembly . . . . . 14
60" Wheel Assembly. . . . . 15
Control Assembly . . . . . 16 and 17
Hydro Pump Assembly . . . . . 18
Seat Assembly . . . . . 19
28/33 HP Generac Engine Assembly . . . . . 20 and 21
Electrical Assembly Generac . . . . . 22 and 23
Lift Assembly . . . . . 24 and 25
Foot Pedal Assembly . . . . . 26
Floor Panel Assembly. . . . . 27


## MODELS LISTED IN THIS MANUAL

**28HP Tank, 53AB5FEZ750**

**33HP Tank 53AB5FJZ750**

# **Frame Assembly**- Figure 1 and Parts List

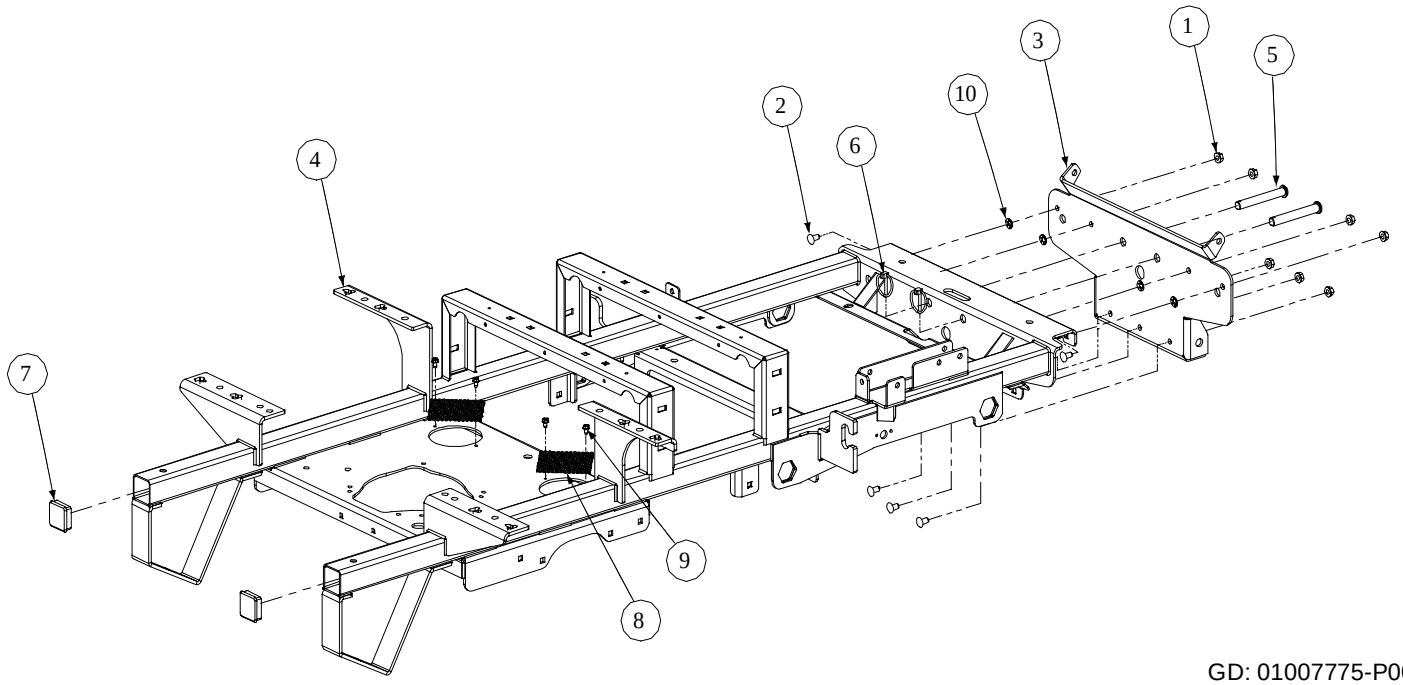


GD: 01007775-P00

| Ref. No. | Part No. | Description | Qty. |
|---|---|---|---|
| 1 | 00022560 | Hex Nut, 3/8-16 Flange Lock | 7 |
| 2 | 01000372 | Carriage Bolt, 3/8-16 x .75 Long | 7 |
| 3 | 01007779 | Bracket Assembly, Frame, Front | 1 |
| 4 | 01007778 | Frame Assembly | 1 |
| 5 | 01003282 | Clevis Pin, .625 Dia x 4.375 Long | 2 |
| 6 | 01003993 | Linch Pin, 3/16 Dia. | 2 |
| 7 | 01005160 | Plug, Square Tube | 2 |
| 8 | 01005680 | Cover, Hydro Fan | 2 |
| 9 | 01000628 | Screw, TT, 1/4-20, 0.5 | 4 |
| 10 | 01008225 | Push Retainer, 3/8"-Thread Stud | 4 |

# **72" Fabricated Cutter Deck** - Figure 2

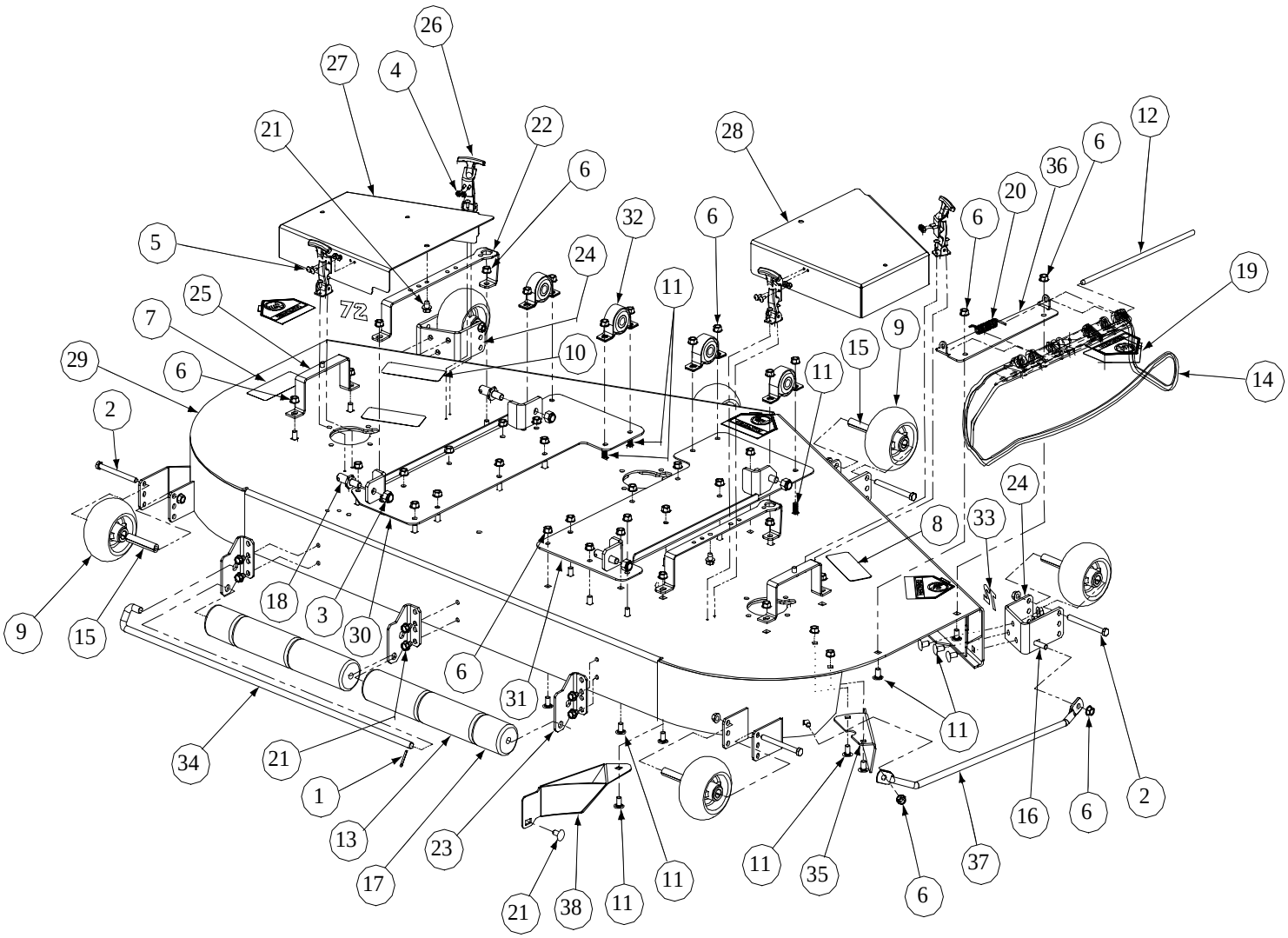


GD: 01008212-P05

# **72" Fabricated Cutter Deck** - Parts List for Figure 2

| Ref. No. | Part No. | Description | Qty. |
|---|---|---|---|
| 1 | 00003107 | Cotter Pin, .125 Dia. x 1.0 | 1 |
| 2 | 00011925 | Hex Cap Screw, 3/8-16, 3.75 | 6 |
| 3 | 00012428 | Lock Nut, Nylon Insert, 1/2-13 | 4 |
| 4 | 00014608 | Lock Nut, Nylon Insert, #10-32 | 16 |
| 5 | 00017778 | Phillips Head Screw, #10-32 x 1/2 | 16 |
| 6 | 00022560 | Flange Lock Hex Nut, 3/8-16 | 61 |
| 7 | 00030633 | Decal, Rotating Blade | 1 |
| 8 | 00030635 | Decal, Warning Shield Missing | 2 |
| 9 | 01000343 | Complete Wheel, 5.00 Dia. | 6 |
| 10 | 01006086 | Command Cut Large | 1 |
| 11 | 01000372 | Carriage Bolt, 3/8-16 x .75 Lg. | 44 |
| 12 | 01009102 | Pin, .375 x 14.06 | 1 |
| 13 | 01000385 | Front Roller | 4 |
| 14 | 01009705 | Chute Deflector | 1 |
| 15 | 01000398 | Wheel Spacer | 6 |
| 16 | 01000643 | Carriage Bolt, 3/8-16 x 1 | 9 |
| 17 | 01001169 | Grass Catcher Roller | 2 |
| 18 | 01001745 | Pin, 5/8 Dia. x 1.2 Lg. | 4 |
| 19 | 01002166 | Decal, Danger Hand and Feet | 4 |
| 20 | 01003253 | Torsion Spring, 0.4ID x 2.16Lg | 1 |
| 21 | 01004304 | Hex Index Washer Screw, 3/8-16, .5 | 9 |
| 22 | 01004685 | Belt Cover Support | 2 |
| 23 | 01005364 | Deck Roller Mount Bracket | 3 |
| 24 | 01005260 | Anti-Scalp Wheel Front Mount Bracket | 4 |
| 25 | 01005437 | Outer Belt Cover Support Assembly | 2 |
| 26 | 01005869 | T-Handle Latch Draw | 4 |
| 27 | 01007168 | Left Hand Deck Belt Cover Weldment | 1 |
| 28 | 01007169 | Right Hand Deck Belt Cover Weldment | 1 |
| 29 | 01008097 | 72 Deck Assembly | 1 |
| 30 | 01008224 | Left Hand Deck Weldment Bracket | 1 |
| 31 | 01008223 | Right Hand Deck Weldment Bracket | 1 |
| 32 | 01009700 | Pillow Block | 4 |
| 33 | 01008230 | Decal, 72" | 2 |
| 34 | 01008233 | Roller Pin | 1 |
| 35 | 01009300 | Chute Bracket | 1 |
| 36 | 01008514 | Chute Bracket | 1 |
| 37 | 01008526 | Finger Guard | 1 |
| 38 | 01008632 | Discharge Baffle WEldment | 1 |

# **72" Fabricated Deck Spindle Assembly** - Figure 3

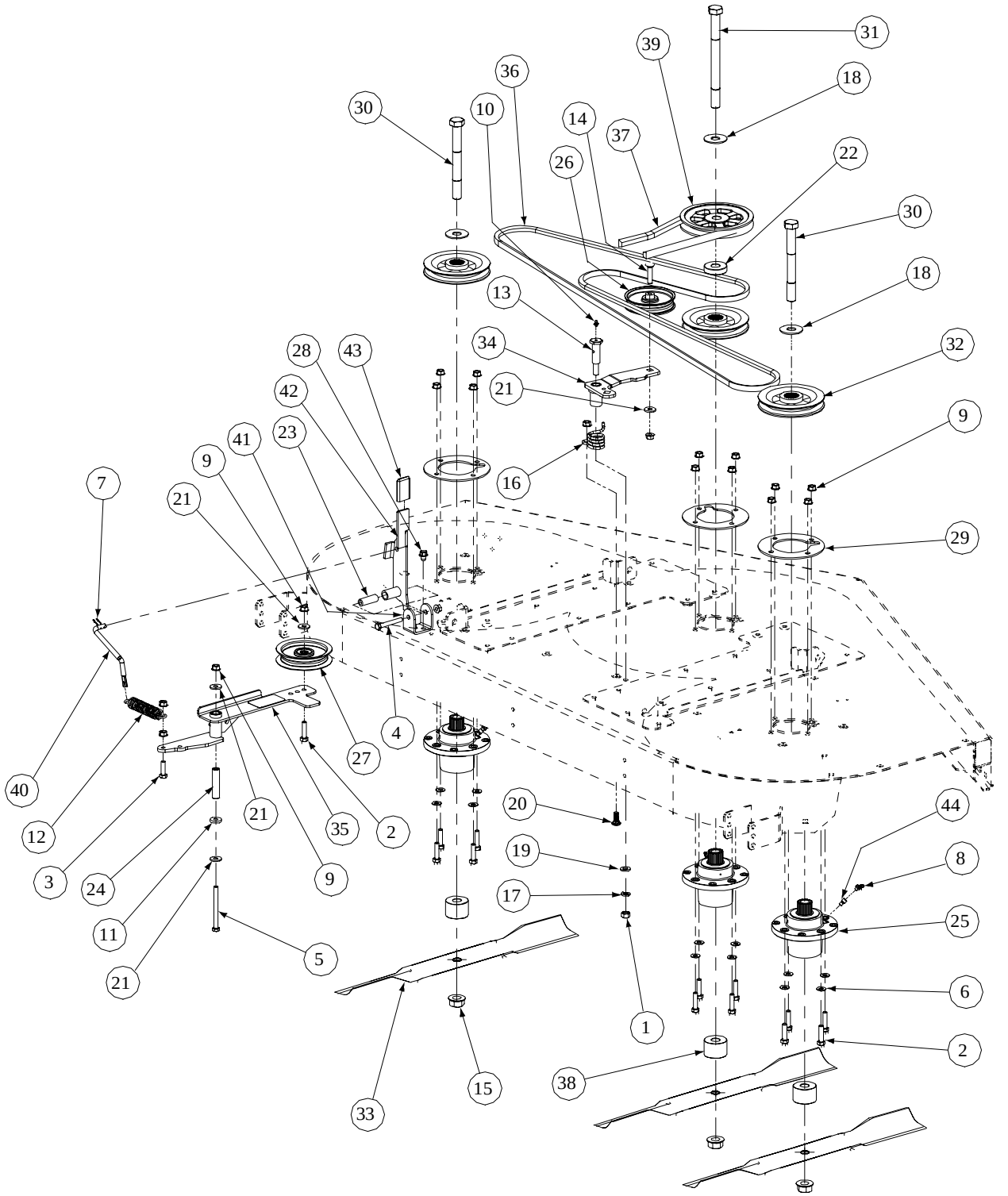


GD: 01008214-P00

# **72" Fabricated Deck Spindle Assembly** - Parts List for Figure 3

| Ref. No. | Part No. | Description | Qty. |
|---|---|---|---|
| 1 | 00005763 | Hex Nut, 7/16-14 | 1 |
| 2 | 00011438 | Hex Cap Screw, 3/8-16 x 1-1/2 | 13 |
| 3 | 00011444 | Hex Cap Screw, 3/8-16 x 1-1/4 | 1 |
| 4 | 00011861 | Hex Cap Screw, 3/8-16 x 2-1/2 | 1 |
| 5 | 00011925 | Hex Cap Screw, 3/8-16, 4.00 | 1 |
| 6 | 00012158 | Flat Washer, 3/8 | 12 |
| 7 | 01002771 | Cotter Pin, .072 x 1.12 Long | 2 |
| 8 | 00021958 | Taper Grease Fitting, 1/4-28, 45 degree | 3 |
| 9 | 00022560 | Flange Lock Hex Nut, 3/8-16 | 19 |
| 10 | 00060078 | Grease Fitting, 1/4-28 x 3/16 | 1 |
| 11 | 00083192 | Idler Washer | 1 |
| 12 | 01000199 | Extension Spring, 1.0 x OD x 5.00 | 1 |
| 13 | 01000302 | Shoulder Screw, 7/16-14 | 1 |
| 14 | 01000364 | Hex Carriage Screw, 3/8-16, 1.75 | 1 |
| 15 | 01000380 | Flange Hex Nut, 3/4-16 | 3 |
| 16 | 01000387 | Torsion Idler Spring | 1 |
| 17 | 01000389 | Lock Washer, 7/16 | 1 |
| 18 | 01000392 | Flat Washer, .781 ID 2.00 OD, .105 | 3 |
| 19 | 01000393 | Flat Washer, .469 ID, .875 OD, .105 | 1 |
| 20 | 01000643 | Carriage Bolt, 3/8-16 x 1 | 1 |
| 21 | 01000723 | Flat Washer, .406 ID, 1.0 OD, .105 | 4 |
| 22 | 01002564 | Spacer, .76 ID x 2.0 OD x .477 | 1 |
| 23 | 01002751 | Spacer, .39 ID x .63 OD x 1.75 | 1 |
| 24 | 01003245 | Spacer, .39 ID x .625 OD x 2.75 | 1 |
| 25 | 01003532 | Aluminum Spindle Assembly | 3 |
| 26 | 01004081 | Flat Pulley | 1 |
| 27 | 01004101 | Idler Pulley, 4.06 OD | 1 |
| 28 | 01004304 | Screw, TT, 3/8-16 x .50, | 2 |
| 29 | 01005434 | Aluminum Spindle Support Plate | 3 |
| 30 | 01008542 | Hex Cap Screw, 3/4-16, 7.50 | 2 |
| 31 | 01005388 | Hex Cap Screw, 3/4-16, 9.00 | 1 |
| 32 | 01007499 | V-Pulley, 5.75 OD | 3 |
| 33 | 01007522 | Bahia Blade, 25.0, .756 ID | 3 |
| 34 | 01007786 | Idler Arm Assembly, Deck | 1 |
| 35 | 01000308 | Bearing Sleeve | 2 |
|  | 01007908 | Idler Arm Assembly, Drive | 1 |
| 36 | 01000308 | Bearing Sleeve | 2 |
|  | 01007937 | V-Belt, B Section x 124.0 LG | 1 |
| 37 | 01007938 | V-Belt, B Section x 99.25 LG | 1 |
| 38 | 01008018 | Spacer, .760 ID x 2.00 OD x .330 | 3 |
| 39 | 01008081 | V-Pulley, 6.360 OD x .750 Bore, Cast | 1 |
| 40 | 01008204 | Spring Tension Rod | 1 |
| 41 | 01008618 | Tension Idler U-Bracket | 1 |
| 42 | 01008252 | Handle Tension Weldment | 1 |
| 43 | 01008270 | Tension Idler Handle Grip | 1 |
| 44 | 01009101 | Straight Adapter Fitiing | 3 |

# **Hydro Tank and Hose Assembly** - Figure 4 and Parts List

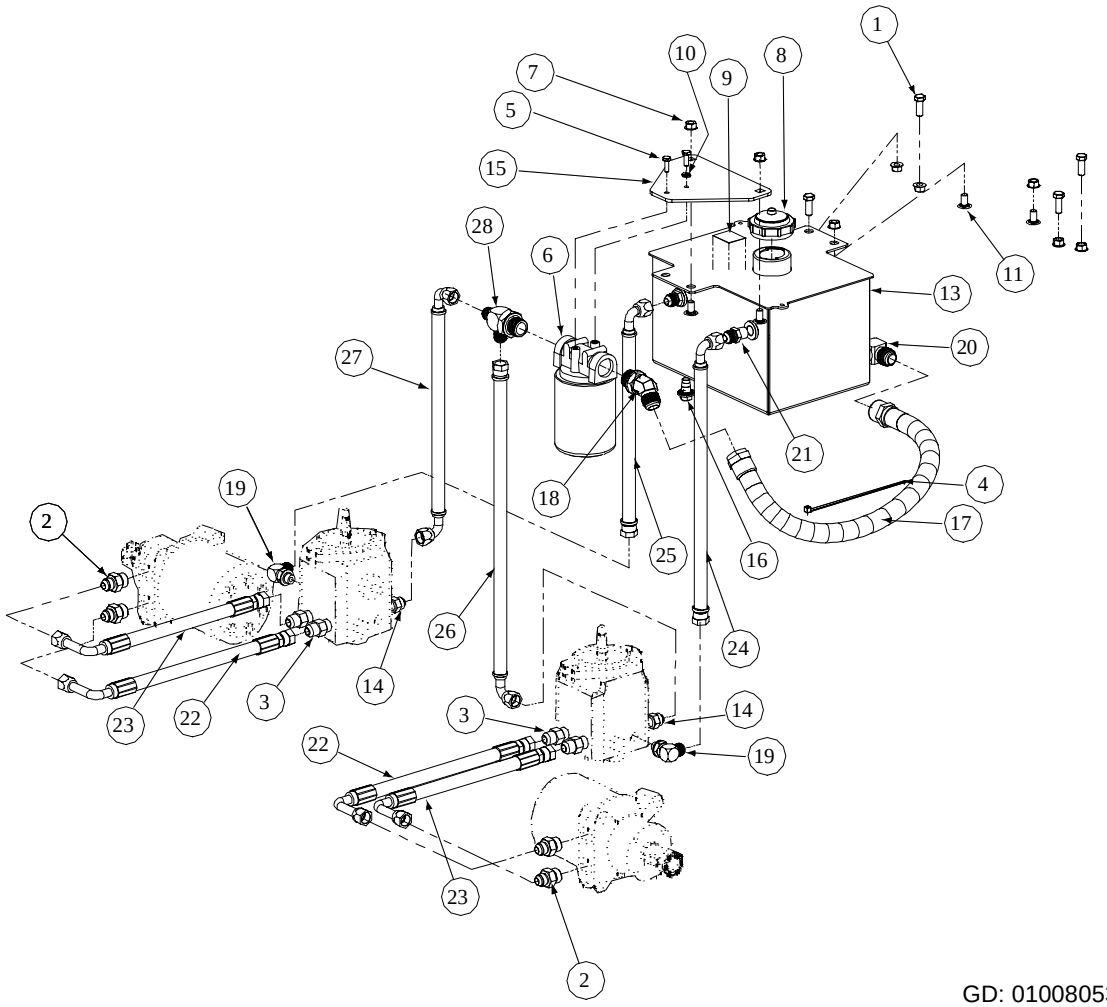


GD: 01008053-P01

| Ref. No. | Part No. | Description | Qty. | Ref. No. | Part No. | Description | Qty. |
|---|---|---|---|---|---|---|---|
| 1 | 00006144 | Hex Cap Screw, 3/8-16, 1 | 4 | 15 | 01001650 | Oil Filter Mounting Plate | 1 |
| 2 | 00012288 | Fitting 1/2 x 3/4 - O Ring | 4 | 16 | 01004192 | Oil Pan Drain Plug w/ Seal | 1 |
| 3 | 00012426 | Fitting 1/2 x 1/2 - O Ring to Flare | 4 | 17 | 01004268 | Tank to Filter Hose Assembly | 1 |
| 4 | 00012470 | Cable Tie, 3/16 x .05 x 7.4 | 5 | 18 | 01004272 | Fitting, 3/4 x3/4 x 45 degree | 1 |
| 5 | 00013131 | Hex Cap Screw, 1/4-20, .75 | 2 | 19 | 01004542 | Elbow Fitting, 3/8 O-ring, 1/2 Flare | 2 |
| 6 | 00017665 | Filter Head 3/4 includes: | 1 | 20 | 01004702 | Fitting Elbow, 3/4 NPT x 1-1/16 Flare | 1 |
| | 01004166 | Filter | | 21 | 01006353 | Fitting, 3/8 NPT, 1/2 Flare | 2 |
| 7 | 00022560 | Hex Nut Flange Lock, 3/8-16 | 8 | 22 | 01008052 | Long Pressure Hose Assembly | 2 |
| 8 | 00030261 | Cap, Hydro Oil Tank | 1 | 23 | 01008054 | Short Pressure Hose Assembly | 2 |
| 9 | 00031994 | Decal Oil Only 20W50 | 1 | 24 | 01006901 | 17.75" Return Hose Assembly, RH | 1 |
| 10 | 00012132 | Lock Washer, 1/4 | 1 | 25 | 01006902 | 14.25" Return Hose Assembly, LH | 1 |
| 11 | 01000372 | Carriage Bolt, 3/8-16 x .75 LG. | 4 | 26 | 01006914 | 21.25" Supply Hose Assembly, RH | 1 |
| 12 | -- | -- | -- | 27 | 01006916 | 15.50" SupplyHose Assembly, LH | 1 |
| 13 | 01004516 | Hydraulic Tank Assembly | 1 | 28 | 01006959 | Tee Fitting, 3/4 x 1/2 x 1/2 | 1 |
| 14 | 01002606 | Fitting Connector, 1/2 x 3/8 | 2 | | | | |

**NOTE:** Lubricant, 737-3120 Gallons, 3.25

# **Brake Motor Mount and Hub**- Figure 5 and Parts List

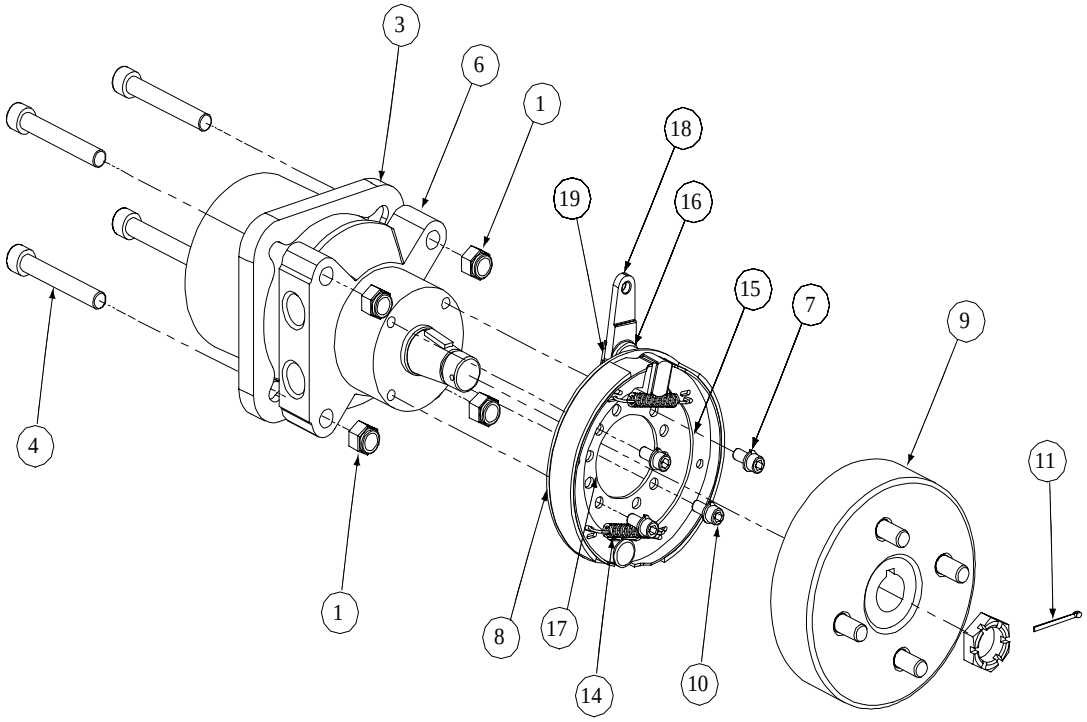


GD: 01008055-P02

| Ref. No. | Part No. | Description | Qty. |
|---|---|---|---|
| 1 | 00012428 | Lock Nut, Nylon Insert, 1/2-13 | 8 |
| 2 | -- | -- | -- |
| 3 | 01009775 | Motor Spacer | 2 |
| 4 | 01008449 | Socket Head Capscrew, 1/2-13; 6-1/2 | 8 |
| 5 | 01008436 | Hyd. Motor, Parker Left Hand Assembly w/ Brake & Drum (Not Shown) | 1 |
| 6 | 01008437 | Hyd. Motor, Parker Right Hand Assembly w/ Brake & Drum | 1 |
| 7 | 00012168 | Lock Washer, 5/16 | 8 |
| 8 | 01007048 | Brake Assembly w/Line | 2 |
| 9 | 01007049 | Hub and Drum Assembly w/Studs | 2 |
| 10 | 01007464 | Capscrew w/Socket, 5/16-18 x 3/4 | 8 |
| 11 | 01007773 | Cotter Pin 1/8 x 1-1/2 | 2 |

# **Brake Assembly** - Figure 6

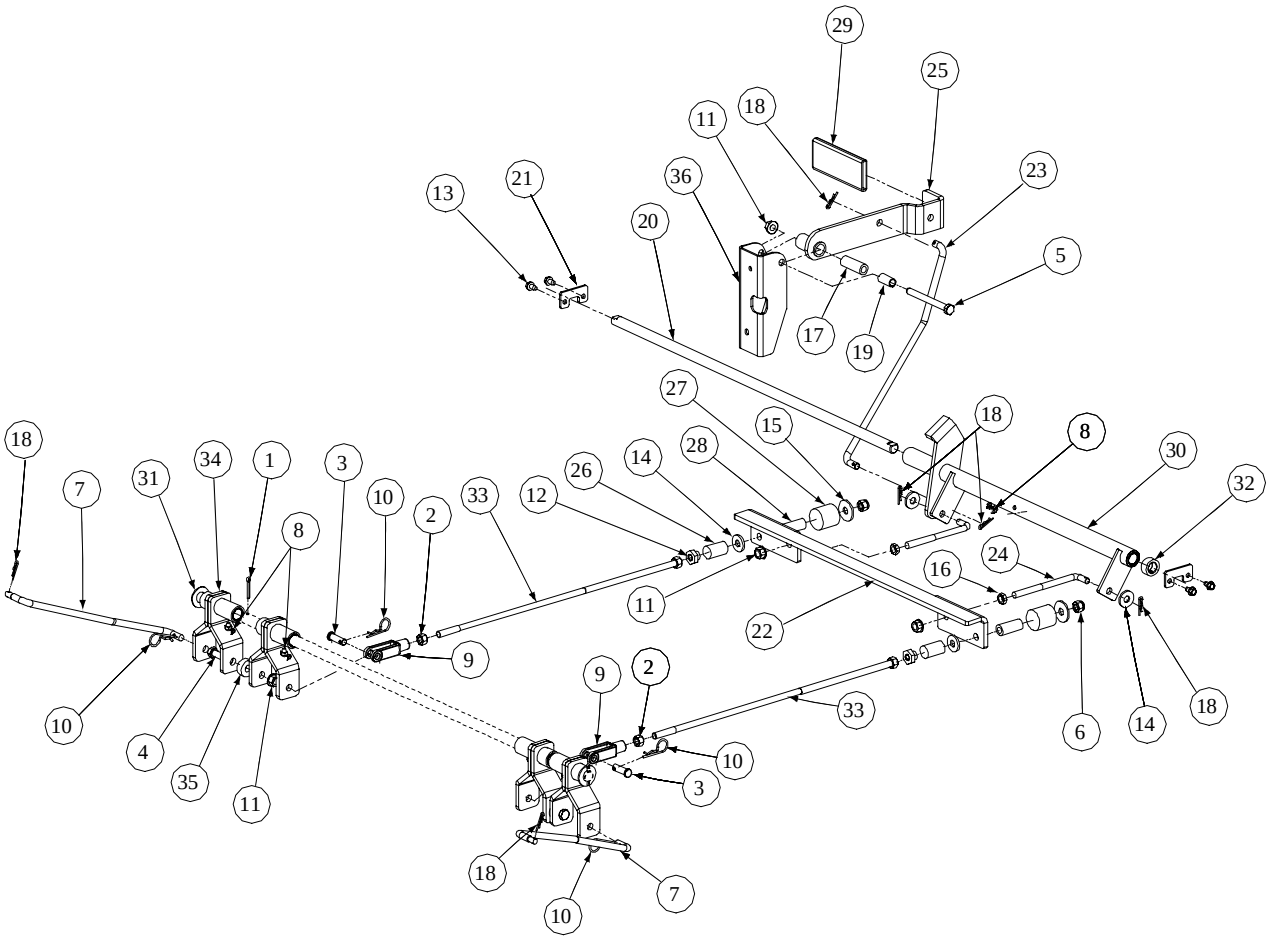


GD: 01008093-P01

# **Brake Assembly** - Parts List for Figure 6

| Ref. No. | Part No. | Description | Qty. |
|---|---|---|---|
| 1 | 00003107 | Cotter Pin, .125 x 1.0 | 2 |
| 2 | 00006131 | Hex Nut, 3/8-16 | 4 |
| 3 | 00009678 | Clevis Pin, 3/8 x 1-1/8 | 2 |
| 4 | 00010980 | Hex Cap Screw, 3/8-16 x 1.50 | 2 |
| 5 | 01000371 | Hex Cap Screw, 3/8-16 x 3-1/4 | 1 |
| 6 | 00012173 | Nylock Nut, 3/8-16 | 2 |
| 7 | 01007771 | Linkage Brake Rod | 2 |
| 8 | 00012226 | Grease Fitting, 1/4 -28, 90° | 5 |
| 9 | 00021955 | Yoke, 3/8-16 | 2 |
| 10 | 00021956 | Hair Pin, 3/8" - 1/2" | 4 |
| 11 | 00022560 | Flange Lock Hex Nut, 3/8-16 | 5 |
| 12 | 01000100 | Shoulder Nut | 2 |
| 13 | 01000628 | Screw, 1/4-20 x 1-1/2 | 4 |
| 14 | 01000723 | Flat Washer, .406 ID x 1.0 OD x .105 | 4 |
| 15 | 01000872 | Flat Washer, .411 x 1.25 x .100 | 2 |
| 16 | 01002511 | Jam Nut, 3/8-16 | 2 |
| 17 | 01002751 | Spacer, .39 x .63 x 1.75 | 1 |
| 18 | 01002771 | Cotter Pin, .072 x 1.12 Lg | 6 |
| 19 | 01003468 | Spacer, .375 x .50 x .75 Lg | 1 |
| 20 | 01008524 | Bellecrank Mounting Shaft | 1 |
| 21 | 01003591 | Parking Brake Shaft Holder | 2 |
| 22 | 01003593 | Brake Bracket | 1 |
| 23 | 01008886 | Brake Rod | 1 |
| 24 | 01003417 | Connector Rod, 3/8 OD x 5.75 | 2 |
| 25 | 01003595 | Brake Handle | 1 |
| 26 | 01003574 | Neutral Brake Spring | 2 |
| 27 | 01003575 | Force Brake Spring | 2 |
| 28 | 01003576 | Center Brake Hose | 2 |
| 29 | 01003716 | Parking Brake Grip | 1 |
| 30 | 01003730 | Brake Bearing Hub | 1 |
| 31 | 01004003 | Flat Washer, 5/8 | 2 |
| 32 | 01006350 | Shaft Collar, .625 ID x 1" OD x .438 | 2 |
| 33 | 01006856 | Connector Rod, 3/8 OD x 17.88 Lg | 2 |
| 34 | 01008086 | Rear Brake Arm Assembly | 4 |
| 35 | 01000397 | Spacer, .406 x 1.00 x .38 | 2 |
| 36 | 01008889 | Park Brake Mounting Bracket | 1 |

# **Fuel Tank Assembly** - Figure 7 and Parts List

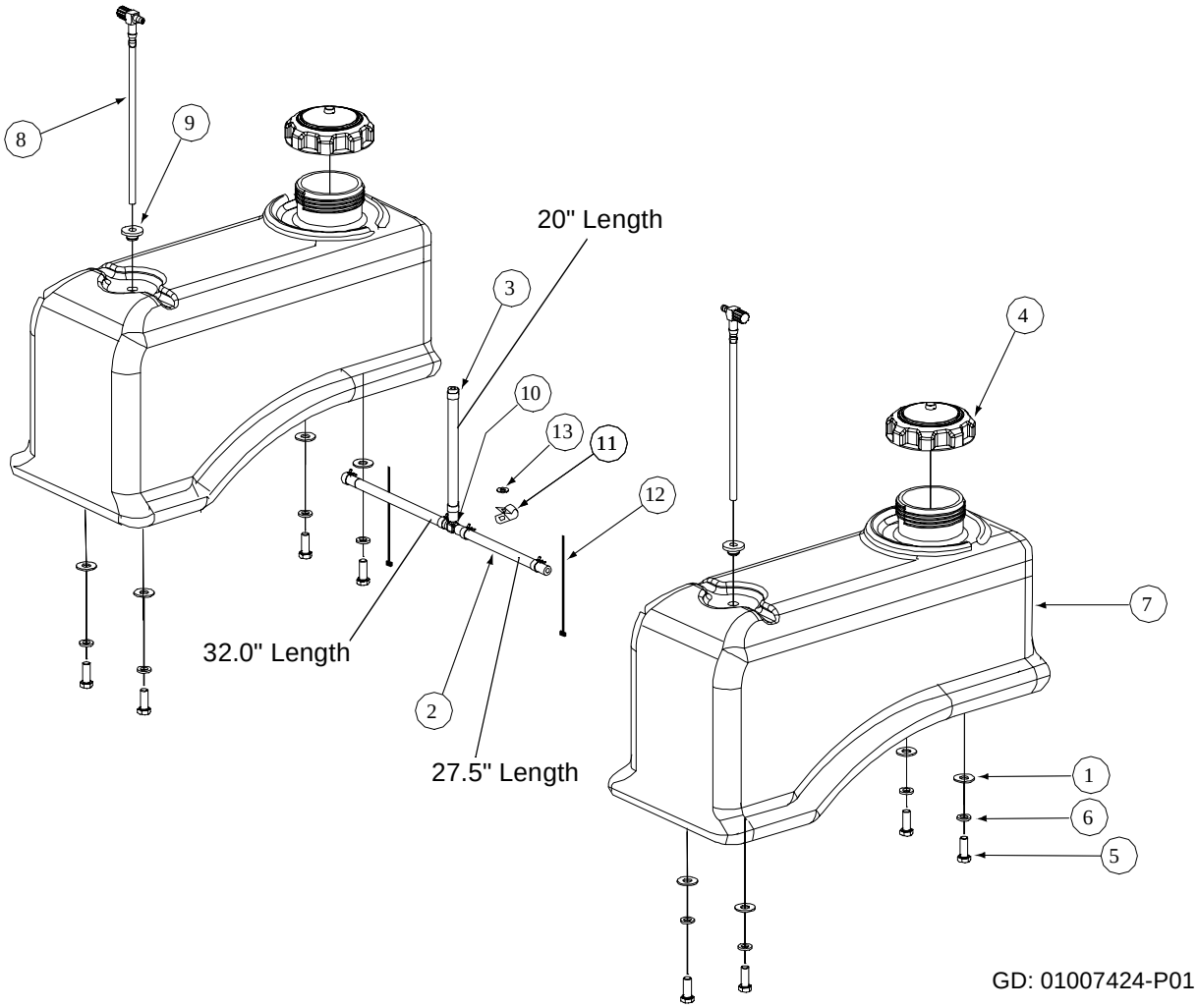


GD: 01007424-P01

| Ref. No. | Part No. | Description | Qty. |
|---|---|---|---|
| 1 | 01000723 | Flat Washer, .406 ID, 1.0 OD, .105 | 8 |
| 2 | -- | Hose, 1/4" Fuel Line (in inches) | 79.5 |
| 3 | 00012235 | Clamp, Union | 6 |
| 4 | 01000069 | Fuel Cap, 3.5 | 2 |
| 5 | 01000368 | Hex, Cap Screw, 3/8-16, .88 | 8 |
| 6 | 00012157 | Lock Washer, 3/8 | 8 |
| 7 | 01007218 | Fuel Tank | 2 |
| 8 | 01007425 | Fuel Fitting | 2 |
| 9 | 01000281 | Fuel Tank Grommet | 2 |
| 10 | 01003473 | Tee Fitting, Fuel | 1 |
| 11 | 00031081 | Clamp | 1 |
| 12 | 00012470 | Cable Tie | 2 |
| 13 | 01000600 | Flatwasher 1/4 x .630 x .0515 | 1 |

# **Rear Bumper** - Figure 8 and Parts List

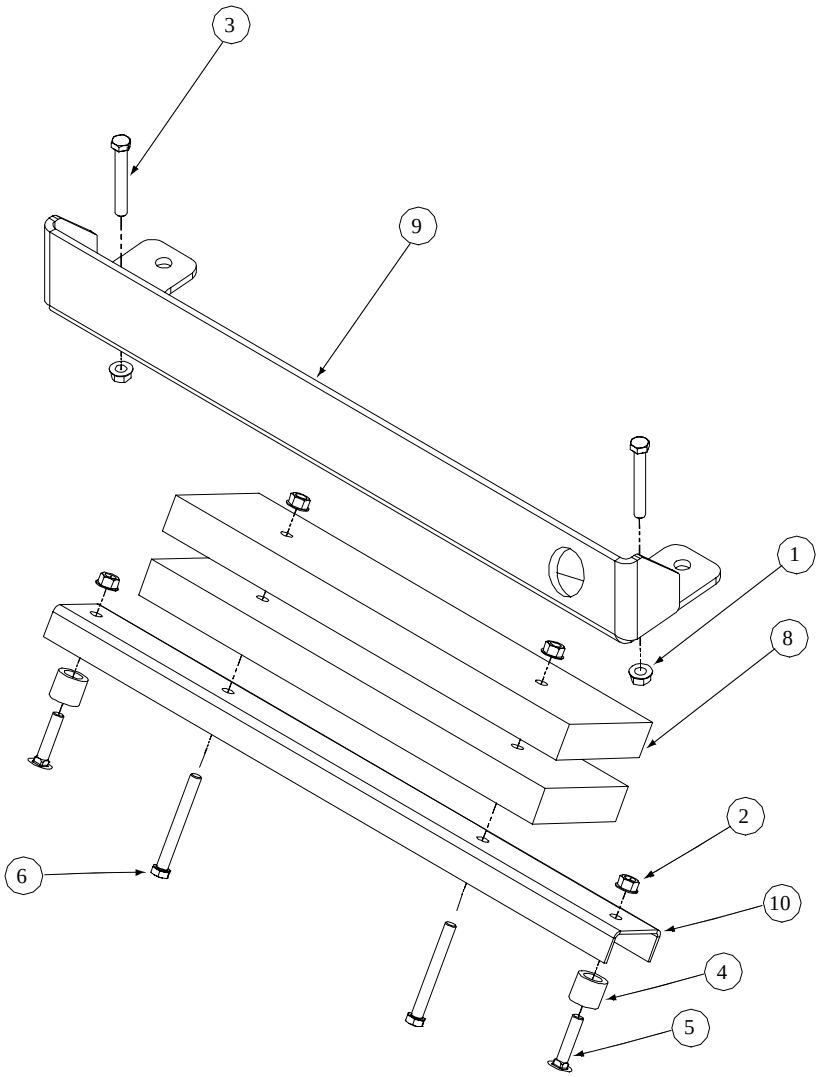


GD: 01003539-P08

| Ref. No. | Part No. | Description | Qty. |
|---|---|---|---|
| 1 | 00012428 | Hex Nut, 1/2-13, Insert Lock | 2 |
| 2 | 00022560 | Nut, Hex 3/8-16 Flange Lock | 4 |
| 3 | 00030046 | HHCS, 1/2-13, 3.00 | 2 |
| 4 | 01000917 | Spacer Crossbar | 2 |
| 5 | 01000364 | Carriage Bolt, 3/8-16, 1.75 | 2 |
| 6 | 01000371 | HHCS, 3/8-16, 3.25 | 2 |
| 7 | -- | -- | -- |
| 8 | 01003789 | Bar, Weight | 2 |
| 9 | 01005067 | Rear Bumper Plate | 1 |
| 10 | 01003794 | Bumper Cross Bar-Rear | 1 |

# **Front Caster Assembly** - Figure 9 and Parts List

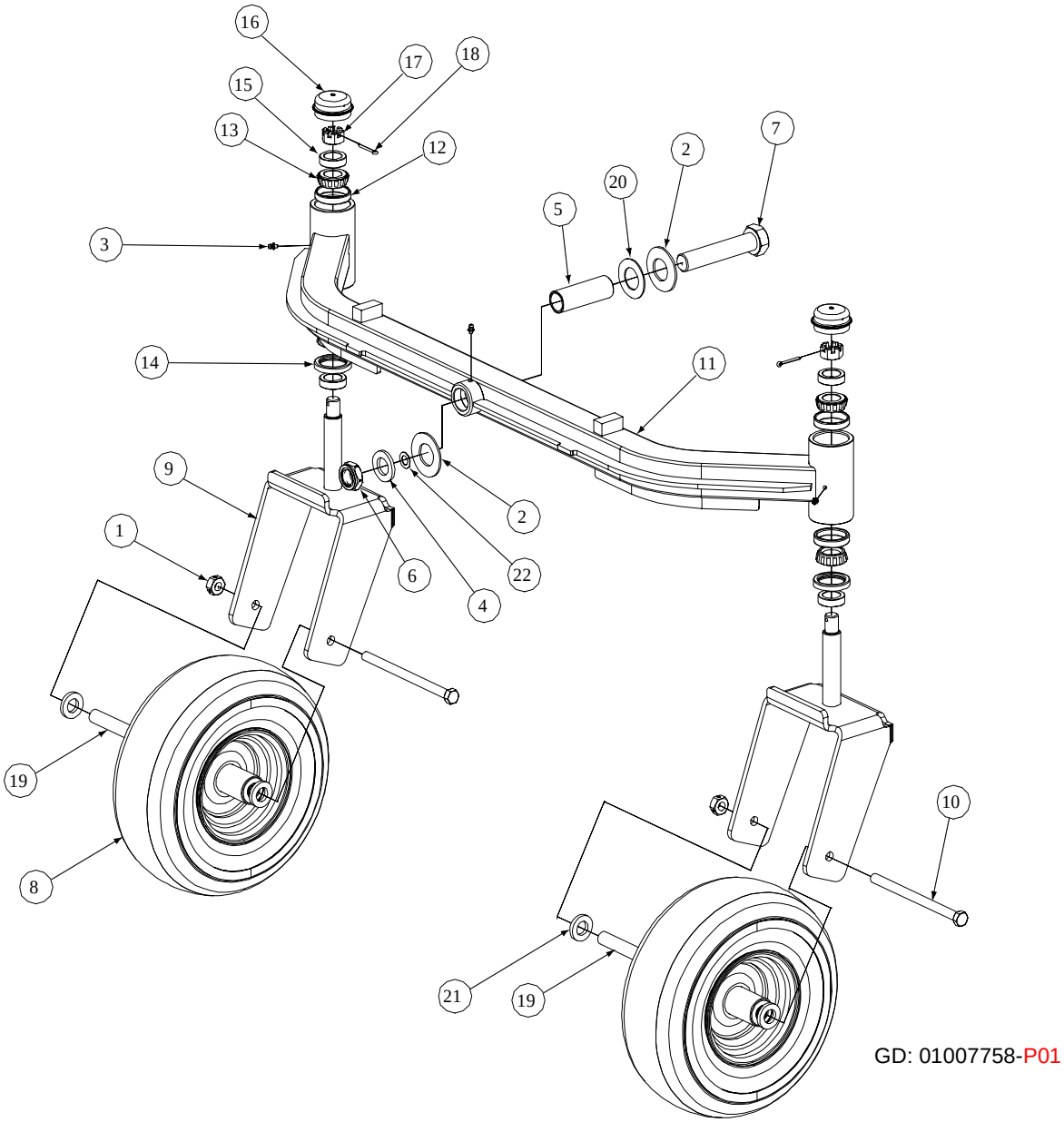


GD: 01007758-P01

| Ref. No. | Part No. | Description | Qty. | Ref. No. | Part No. | Description | Qty. |
|---|---|---|---|---|---|---|---|
| 1 | 00023287 | Nut, 1/2-20, Center Lock | 2 | 11 | 01007760 | Front Axle Assembly | 1 |
| 2 | 01006294 | Bell Washer, 1.25 ID x 2.5 OD x .180 | 2 | 12 | 01002620 | Cup Bearing | 4 |
| 3 | 00060078 | Grease Fitting | 3 | 13 | 01002621 | Bearing Cone | 4 |
| 4 | 00023822 | Special Washer | 1 | 14 | 01002622 | Seal | 2 |
| 5 | 01006310 | Spacer, 1.005 ID x 1.25 OD x 3.6 | 1 | 15 | 01002624 | Ring Seal | 4 |
| 6 | 01000678 | Nut, Jam, 1.0-14, Insert Lock | 1 | 16 | 01006347 | Grease Cap, 1.986 OD | 2 |
| 7 | 01006309 | Hex Cap Screw, 1-14 x 5.0 | 1 | 17 | 01002626 | Slotted Nut, 3/4-16 | 2 |
| 8 | 01006913 | Wheel, 13 x 6.50 x 6, White | 2 | 18 | 01002627 | Cotter Pin, 5/32, 1.25 | 2 |
| -- | 01007564 | Tire | 1 | 19 | 01006912 | Wheel Spacer | 2 |
| -- | | Retainer Flange | 2 | 20 | 01006408 | Flat Washer, 1.25 ID x 2.25 OD x .075 | 1 |
| -- | | Roller Bearing | 2 | 21 | 01003123 | Spacer, .812 ID x .218LG | 4 |
| 9 | 01007407 | Yoke, Caster Wheel | 2 | 22 | 01009997 | Retainer Extension, Self Locking | 1 |
| 10 | 01006961 | HHCS, 1/2-20, 7.50 | 2 | | | | |

# **72" Wheel Assembly** - Figure 10 and Parts List

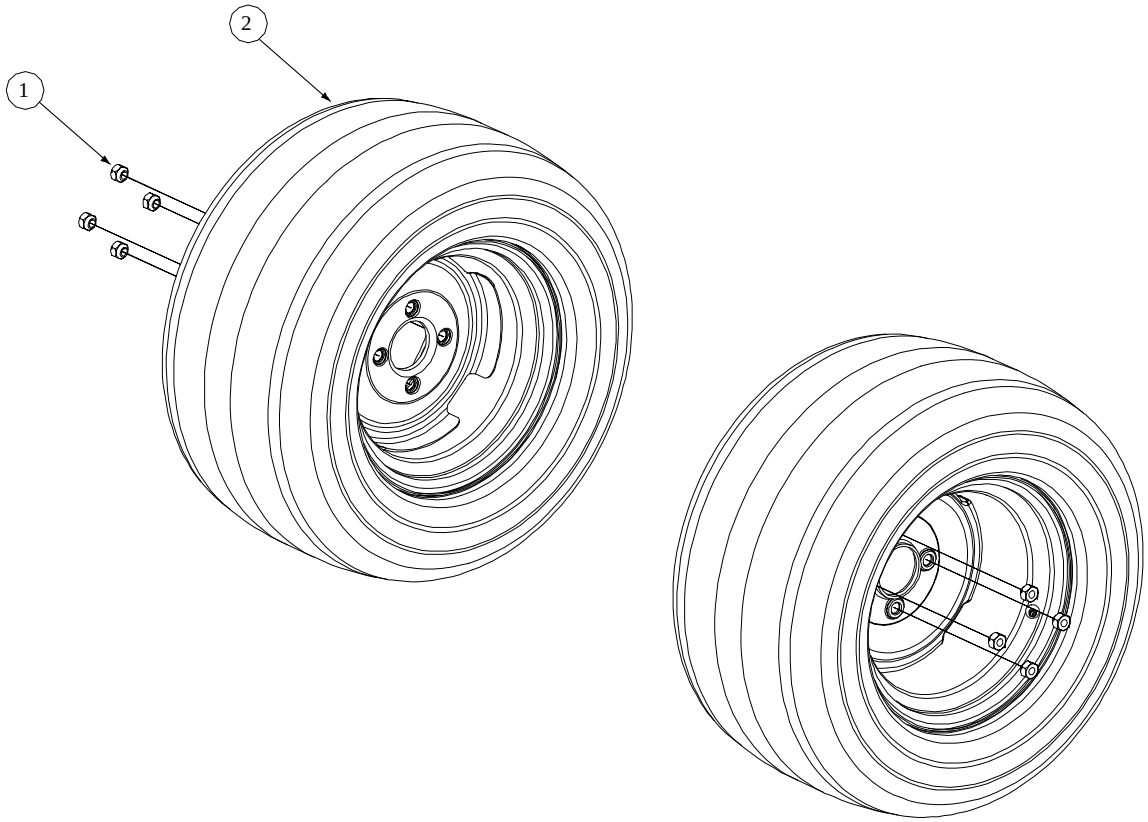


GD: 01002572-P03

| Ref. No. | Part No. | Description | Qty. |
|---|---|---|---|
| 1 | 00012187 | Lug Nut, 1/2-20 | 8 |
| 2 | 01006324 | Wheel Assembly, 24 x 12.00-12, 4-Ply w/ White Rim: Includes Tire only, Turf Master, 24 x 12.00-12, 4-Ply | 2 |
| | | **OPTIONAL TIRE** | |
| | 01002182 | Wheel Assembly, Turf Saver, 24 x 12.00-12, 2 ply w/ White Rim:Includes | 2 |
| | 01004473 | Tire only, Turf Saver, 24 x 12.00-12, 2 Ply | |

# **Control Assembly**- Figure 11

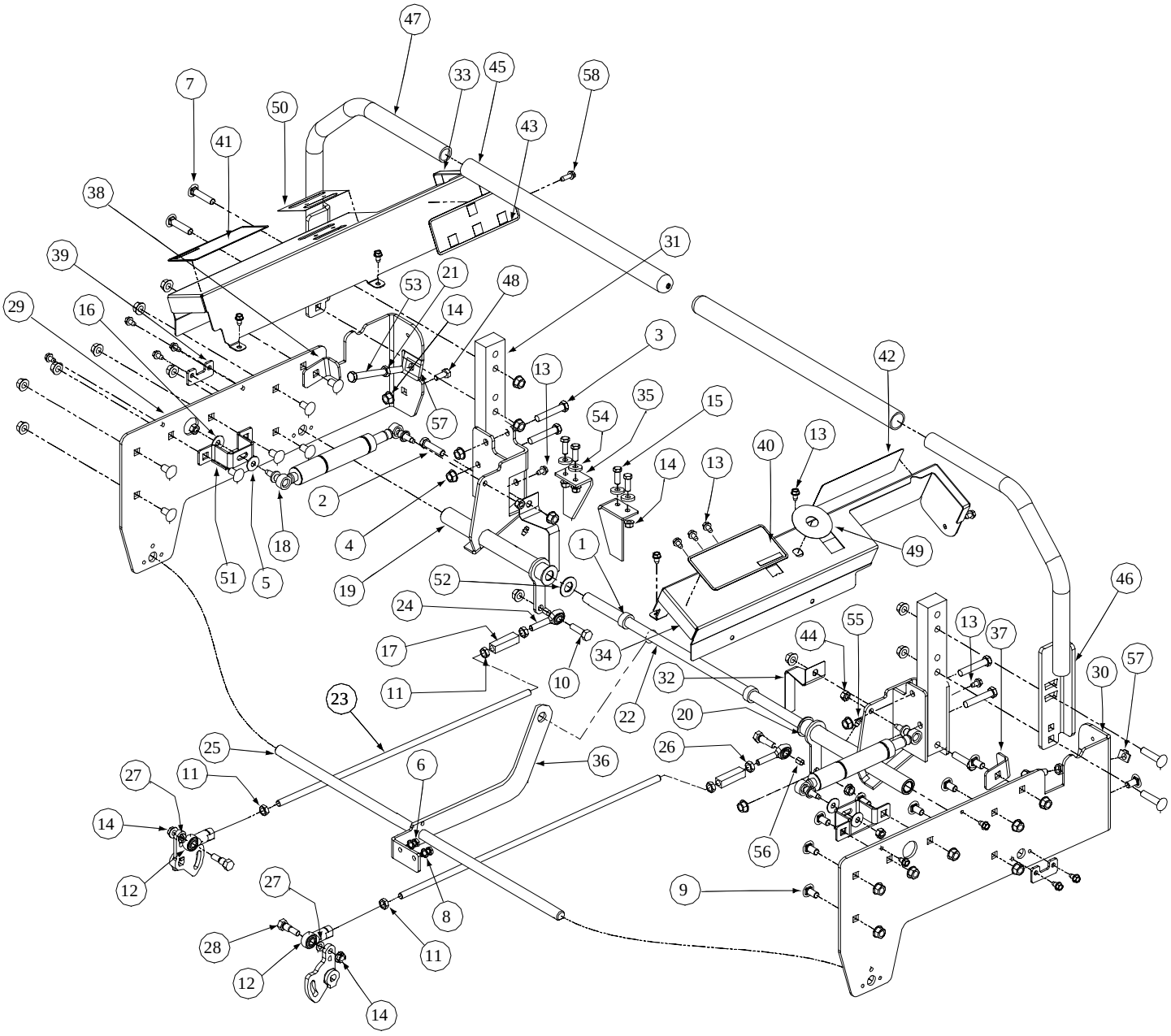


GD: 01008095-P01

# **Control Assembly -** Parts List for Figure 11

| Ref. No. | Part No. | Description | Qty. | Ref. No. | Part No. | Description | Qty. |
|---|---|---|---|---|---|---|---|
| 1 | 01006350 | Shaft Collar | 2 | 29 | 01005769 | Side Panel, Control, Left | 1 |
| 2 | 00010980 | HHCS, 3/8-16, 1.50 | 2 | 30 | 01005770 | Side Panel, Control, Right | 1 |
| 3 | 00011861 | HHCS, 3/8-16, 2.50 | 4 | 31 | 01003009 | Mounting Handle | 2 |
| 4 | 00022560 | Hex Nut, 3/8-16, Lock Flange | 27 | 32 | 01003011 | Lever, Safety Switch | 2 |
| 5 | 01005851 | External Washer, 3/8 | 2 | 33 | 01004889 | Control Panel, LH | 1 |
| 6 | 00013131 | HHCS, 1/4-20, .750 | 2 | 34 | 01004890 | Control Panel, RH | 1 |
| 7 | 01000364 | Hex Carriage Screw, 3/8-16, 1.75 | 4 | 35 | 01003587 | Switch Mounting Bracket, Lapbar | 2 |
| 8 | 00012132 | Lock Washer, 1/4 Zinc | 2 | 36 | 01001968 | Link Mounting Control Shaft, Bracket | 1 |
| 9 | 01000372 | Carriage Bolt, 3/8-16 x .75 | 15 | 37 | 01003199 | Stop, RH | 1 |
| 10 | 00008495 | Capscrew, 3/8-16 x 1-3/4 | 2 | 38 | 01003200 | Stop, LH | 1 |
| 11 | 01000450 | Hex Jam Nut, 3/8-24 | 4 | 39 | 01003591 | Holder Shaft, Park Brake | 2 |
| 12 | 01000451 | B/Joint, 3/8-24, Right Hand Female | 2 | 40 | 01003449 | Decal , Right Hand Console | 1 |
| 13 | 01000628 | Screw, TT, 1/4-20, 0.5, Hex Index Washer | 18 | 41 | 01003450 | Decal, Left Hand Console | 1 |
| 14 | 01000635 | Nut, Lock, HexFlange, 5/16-18 | 7 | 42 | 01003451 | Decal Right Hand Control | 1 |
| 15 | 00013406 | Hex, Cap Screw, 5/16-18 x 3/4 | 4 | 43 | 01003452 | Decal, Left Hand Control | 1 |
| 16 | 01000960 | Belle Washer, .325 x .930 x .045 | 2 | 44 | 01003561 | Nut, Hex, Center Lock, M8 | 4 |
| 17 | 01007734 | Turnbuckle | 2 | 45 | 01003715 | Grip, 1.0 | 2 |
| 18 | 01001727 | Cylinder Return to Neutral | 2 | 46 | 01001615 | Lapbar, Weldment, Right Handle | 1 |
| 19 | 01003044 | Hub Assy, Control LH Bearing | 1 | 47 | 01003729 | Lapbar, Weldment, Left Handle | 1 |
|  | 01004265 | Bearings | 2 | 48 | 00013092 | HHCS, 5/16-18 x 1.0 | 1 |
| 20 | 01003045 | Hub Assy, Control RH Bearing | 1 | 49 | 01003857 | Label, Ingnition, 2.5 Diameter | 1 |
|  | 01004265 | Bearings | 2 | 50 | 01003858 | Label, Control, Throttle and Choke | 1 |
| 21 | 01002511 | Nut, 3/8-16, Jam | 2 | 51 | 01005784 | Bracket Assembly, Mount Dampener | 2 |
| 22 | 01008524 | Shaft Control Brake Steering | 1 | 52 | 01004003 | Flat Washer, 5/8 Nylon | 2 |
| 23 | 01008518 | Rod Connector 3/8 OD x 14.25 | 2 | 53 | 01004127 | HHCS, 3/8-16, 3.00 | 2 |
| 24 | 01008367 | B/Joint, 3/8-24, Left Hand Female | 2 | 54 | 00009812 | Flat Washer, 5/16 | 4 |
| 25 | 01008092 | Rear Brake Shaft | 1 | 55 | 00012226 | Grease Fitting, 90° | 2 |
| 26 | 01002986 | Nut, 3/8-24, Jam, LH Third | 2 | 56 | 01007312 | Spacer, .385ID x .625 OD x .50 Lg | 2 |
| 27 | 00012168 | Lock Washer, 5/16 | 2 | 57 | 01003947 | U-Nut, 3/8-16, .75 | 2 |
| 28 | 01002988 | Screw, Shoulder Control Rod | 2 | 58 | 01000629 | Screw, TT, 1/4-20 x .750 | 1 |

# **Hydro Pump Assembly**- Figure 12 and Parts List

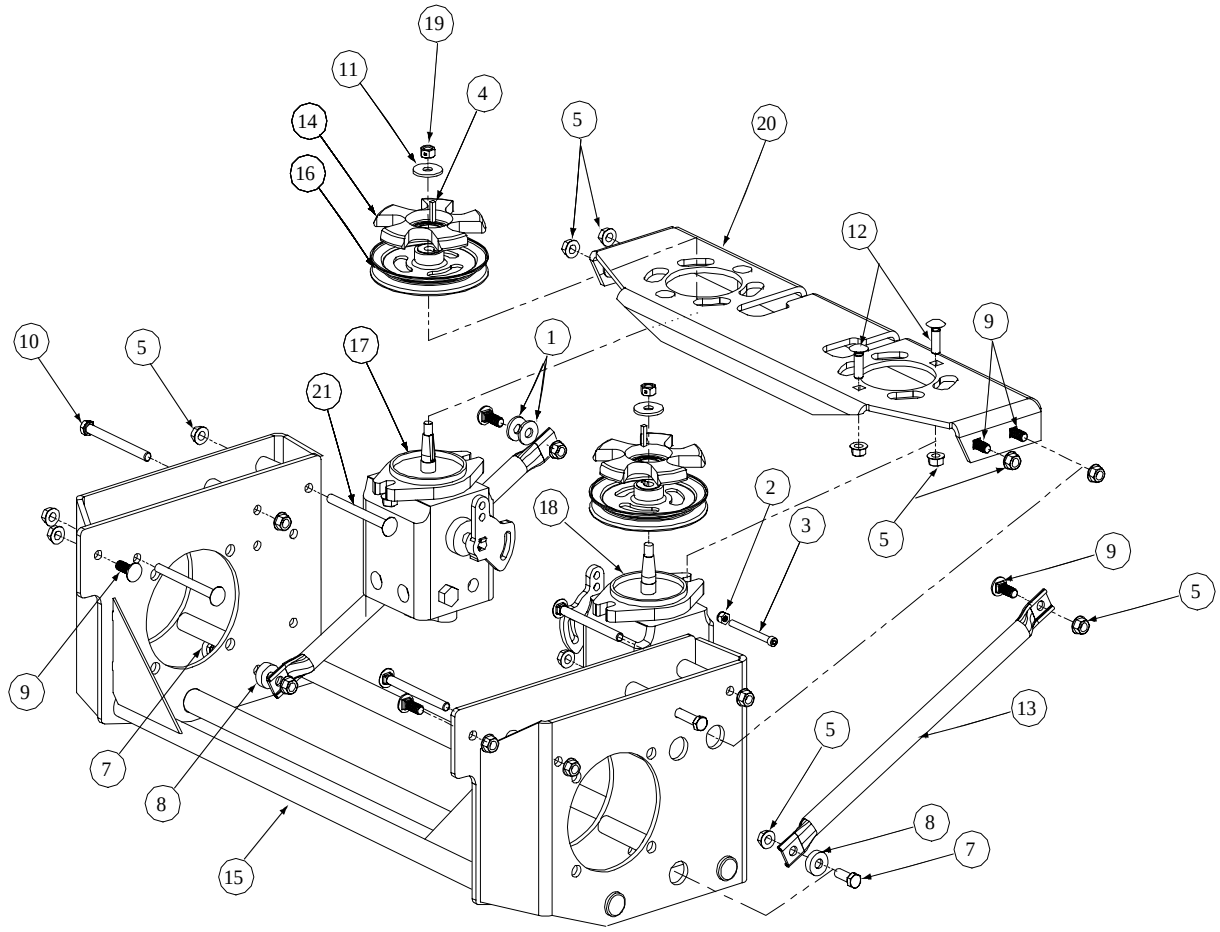


GD: 01008051-P02

| Ref. No. | Part No. | Description | Qty. | Ref. No. | Part No. | Description | Qty. |
|---|---|---|---|---|---|---|---|
| 1 | 00012157 | Washer lock 3/8 zinc | 2 | 12 | 01002010 | Carriage Screw, 3/8-16 x 1.25 | 4 |
| 2 | 00012152 | Lock Nut, Nylon Insert, 1/4-20 | 2 | 13 | 01001618 | Strut Frame | 2 |
| 3 | 00019962 | Socket Head Cap Screw, 1/4-20 x 2-1/2 | 2 | 14 | 01005339 | Hydro Pulley Fan | 2 |
| 4 | 00020628 | Key, 3/16" x 7/8" | 2 | 15 | 01008050 | Hydro Motor Frame Assembly | 1 |
| 5 | 00022560 | Flange Lock Hex Nut, 3/8-16 | 20 | 16 | 01006799 | Hydro Pump Pulley | 2 |
| 6 | -- | -- | -- | 17 | 01006936 | Hydro Pump, LH | 1 |
| 7 | 01000369 | Hex Cap Screw, 3/8 -16 x 1.25 | 2 | 18 | 01006937 | Hydro Pump, RH | 1 |
| 8 | 01000397 | Spacer, .406 ID x 1.00 OD x .38 | 2 | 19 | 01007309 | Hex Nut, 3/8-24 | 2 |
| 9 | 01000643 | Carriage Bolt, 3/8-16 x 1 | 8 | 20 | 01006735 | Hydro Pump Mount | 1 |
| 10 | 00011925 | Hex Cap Screw, 3/8-16 x 4.00 | 2 | 21 | 01008049 | Carriage Bolt, 3/8-16 x 4" | 4 |
| 11 | 01000872 | Flat Washer, .411 x 1.25 x .100 | 2 | | | | |

# **Seat Assembly**- Figure 13 and Parts List

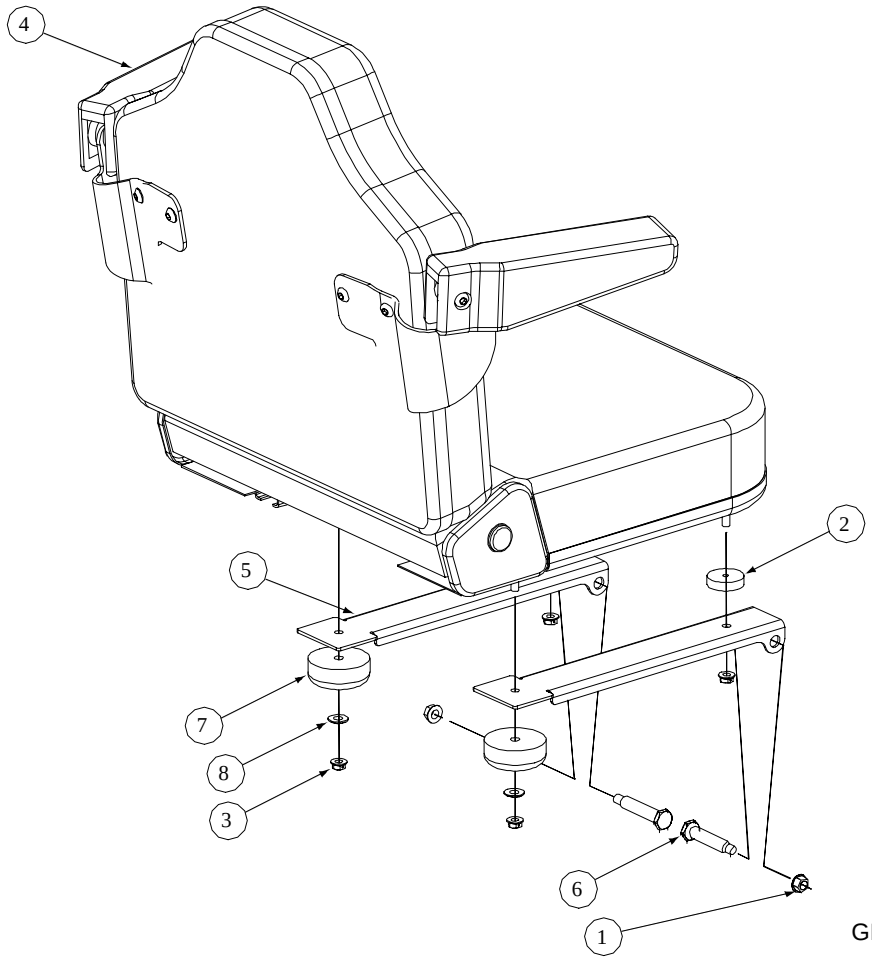


GD: 01005780-P05

| Ref. No. | Part No. | Description | Qty. |
|---|---|---|---|
| 1 | 00022560 | Nut, Hex 3/8-16 Flange Lock | 2 |
| 2 | 01000937 | Spacer, 0.412 ID x 1.125 OD x .44 | 2 |
| 3 | 01000635 | Lock Nut, Hex Flange, 5/16-18 | 4 |
| 4 | 01006764 | Adjustable Seat, Black embossed, Includes Seat Switch | 1 |
| 5 | 01001630 | Mounting Bracket, Seat | 2 |
| 6 | 01002634 | Shoulder Screw, .50x2.345, 3/8-16 | 2 |
| 7 | 01002753 | Grommet, 2.5 OD x 1.0 Long | 2 |
| 8 | 01000960 | Washer | 2 |

# **28/33HP Generac Engine Assembly** - Figure 14

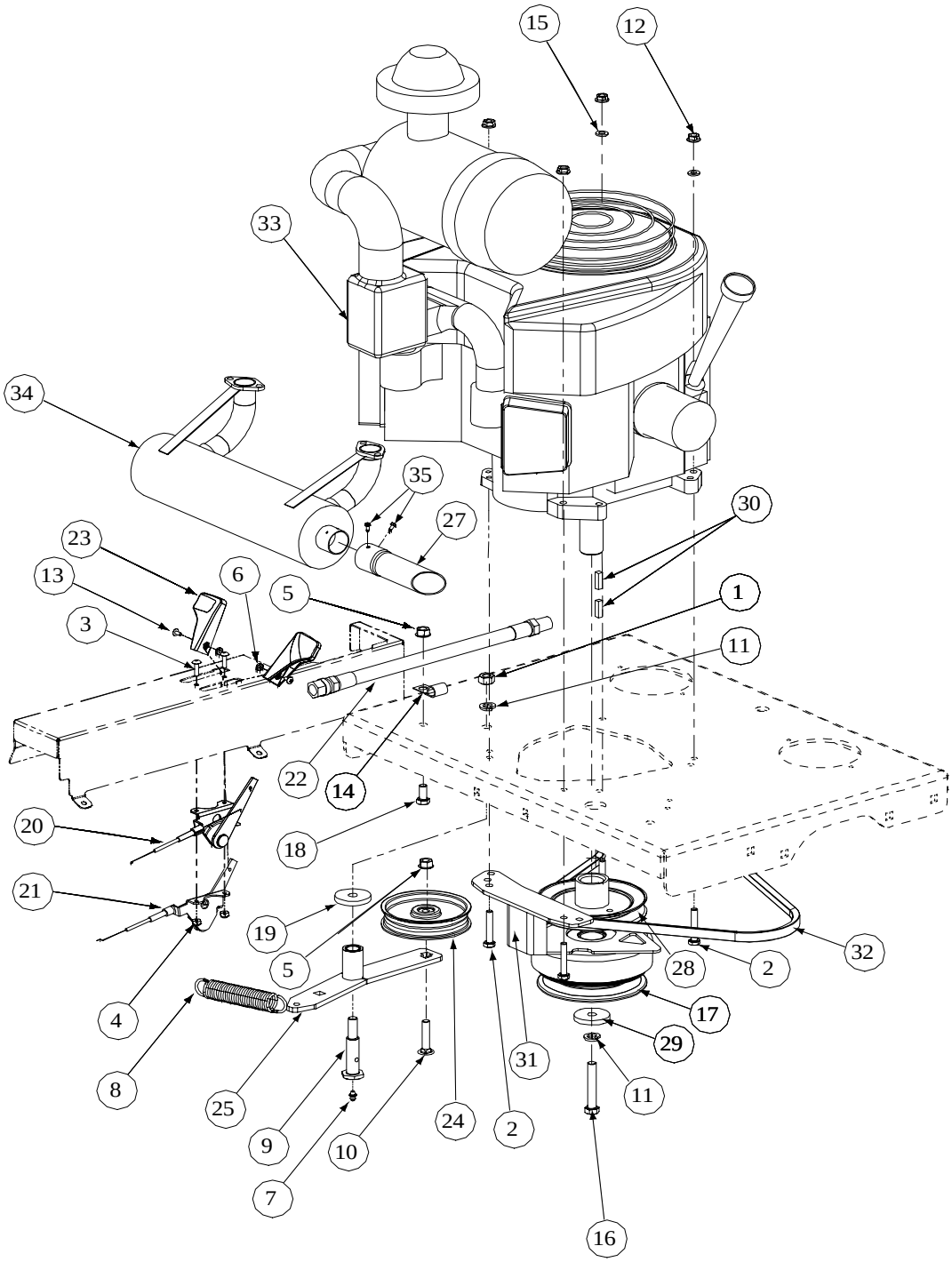


| Description | Part Number |
|---|---|
| Air Filter | GG-0E3557 |
| Air Filter (Inner) | GG-0E3656 |
| Fuel Filter | GG-0D6313 |
| Oil Filter | GG-070185 |
| Spark Plug | 759-3336 |

GD: 01008520-P03
GD: 01008497-P01

# **28/33HP Generac Engine Assembly** - Parts List for Figure 14

| Ref No | Part No. | Description | Qty. |
|---|---|---|---|
| 1 | 00005763 | Hex Nut, 7/16-14 | 1 |
| 2 | 00006129 | HHCS, 5/16-18, 1-3/4 | 4 |
| 3 | 00014602 | Round Hd. Machine Screw, 10-32 x 3/4 | 2 |
| 4 | 00014608 | Lock Nut, Nylon Insert, 10-32 | 2 |
| 5 | 00022560 | Flange Lock, Hex Nut, 3/8-16 | 2 |
| 6 | 00060056 | Nut Washer, W/Star, 8-32 | 2 |
| 7 | 00060078 | Grease Fitting, 1/4-28 x 3/16 | 1 |
| 8 | 01000199 | Extension Spring, 1.0 OD x 5.00 | 1 |
| 9 | 01000302 | Shoulder Screw, 7/16-14 | 1 |
| 10 | 01000364 | Hex Carriage Screw, 3/8-16, 1.75 | 1 |
| 11 | 01000389 | Lock Washer, 7/16 | 2 |
| 12 | 01000635 | Hexflange Lock Nut, 5/16-18 | 4 |
| 13 | 01000721 | Machine Screw, 8-32, .375 | 2 |
| 14 | 01000728 | Clip, Heat Shield Cable | 1 |
| 15 | 00012169 | Flat Washer, 5/16 | 2 |
| 16 | 01001395 | Capscrew, 7/16-20 x 2.50 | 1 |
| 17 | 01007713 | Clutch Brake, 1.125 ID | 1 |
| 18 | 01002601 | Hex Cap Screw, 3/8-16, .750 | 1 |
| 19 | 01003269 | Flat Washer, 7/16 ID x 1.75 OD x .25 | 1 |
| 20 | 01003271 | Choke Control Cable | 1 |
| 21 | 01003273 | Throttle Control Cable | 1 |
| 22 | 01003283 | Oil Drain Hose | 1 |
| 23 | 01004004 | Control Throttle Knob | 2 |
| 24 | 01004081 | Flat Pulley with Flanges | 1 |
| 25 | 01005006 | Engine Idler Arm Assembly Includes: | 1 |
| | 01000308 | Bearing | 2 |
| 26 | -- | -- | -- |
| 27 | 01008623 | Muffler Accessory Exhaust Tube | 1 |
| 28 | 01005104 | Pump Drive Pulley 28HP | 1 |
| | 01008506 | Pump Drive Pulley 33HP | 1 |
| 29 | 01005314 | Flat Washer, 7/16 ID x 1.75 OD x .25 | 1 |
| 30 | 00010022 | Key, 1/4 x 1/4 x 1.125 | 1 |
| 31 | 01007765 | Retainer Clutch Assembly, Ogura | 1 |
| 32 | 01007015 | Belt, 51.2 Lg | 1 |
| 33 | 01008515 | Engine, 28HP Generac | 1 |
| | 01008498 | Engine, 33HP Generac | 1 |
| 34 | 01009920 | Muffler | 1 |
| 35 | 01000811 | Screw, #8-32 x .375 | 2 |
| Note: Engine Oil 10W40 by the Gallon | | | |

# **Electrical Assembly Generac** - Figure 15

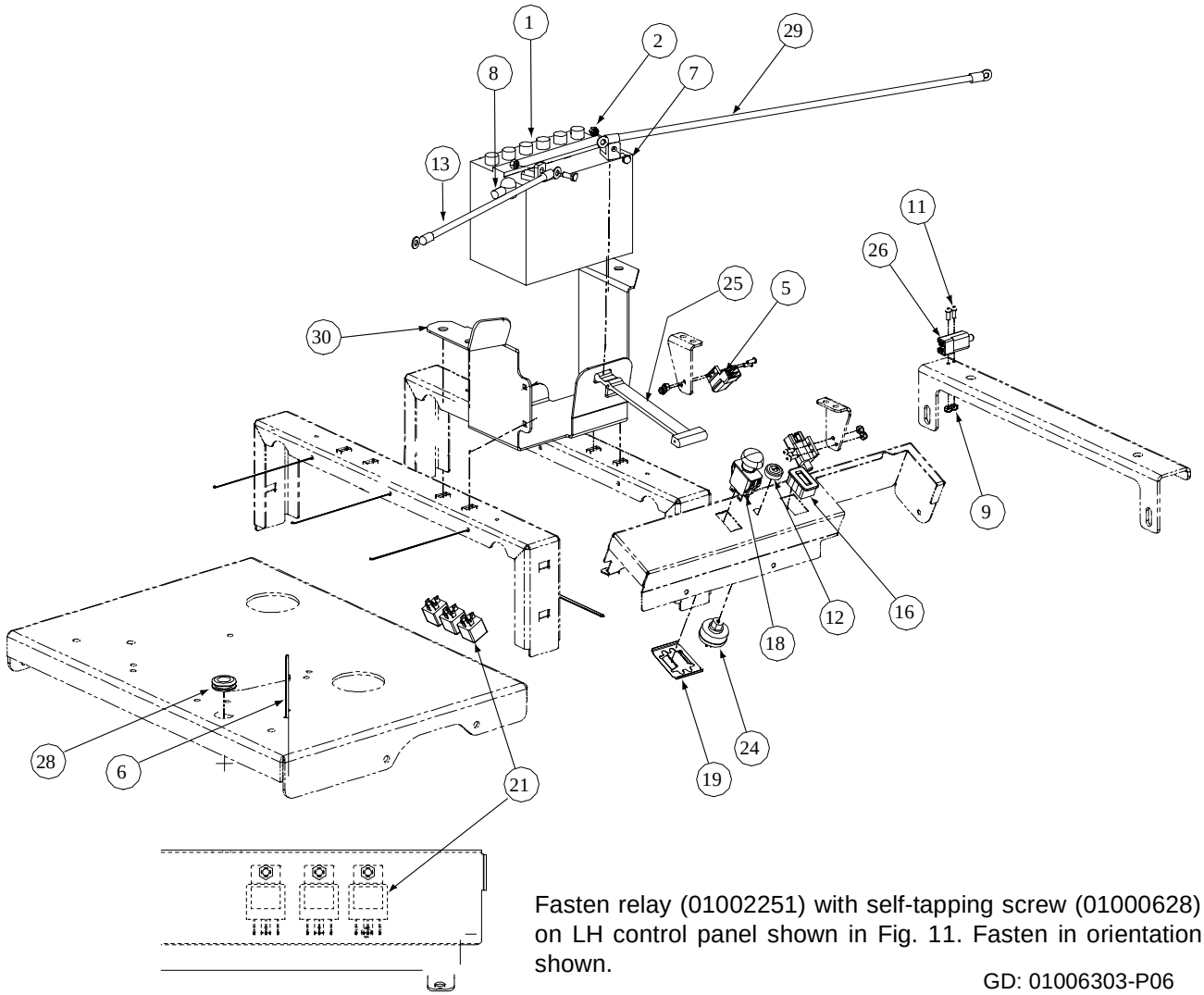


Fasten relay (01002251) with self-tapping screw (01000628) on LH control panel shown in Fig. 11. Fasten in orientation shown.

GD: 01006303-P06

# **28 HP Electrical Assembly Generac** - Parts List for Figure 15

| Ref. No. | Part No. | Description | Qty. |
|---|---|---|---|
| 1 | 00012032 | Battery, 12V 225CCA 30 Min | 1 |
| 2 | 01002766 | Lock Nut, 1/4-20 | 2 |
| 3 | -- | -- | -- |
| 4 | -- | -- | -- |
| 5 | 00012242 | Switch, Safety, NO/NC | 2 |
| 6 | 00012470 | Tie, Cable, 3/16 x .05 x 7.4" | 5 |
| 7 | 00013131 | Screw, Hex, Cap, 1/4-20 x .75 | 2 |
| 8 | 00013258 | Boot, 1" OD Rubber Battery-PST, Red | 1 |
| 9 | 00014608 | Lock Nut, Nylon Insert, #10-32 | 6 |
| 10 | -- | -- | -- |
| 11 | 00030906 | Screw, Phillips Head, Machine, 10-32 x 5/8 | 6 |
| 12 | 00032097 | Nut, W/Cap, 5/8-32 Ignition | 1 |
| 13 | 00012289 | Cable, Battery, Red, 36" | 1 |
| 14 | -- | -- | -- |
| 15 | -- | -- | -- |
| 16 | 01005389 | Meter, Hour | 1 |
| 17 | 01001811 | Hourmeter, Harness (not shown) | 1 |
| 18 | 01002111 | Switch, Electric, PTO | 1 |
| 19 | 01002160 | Bracket, PTO Switch Retainer | 1 |
| 20 | -- | -- | -- |
| 21 | 01002251 | Relay, 12V 40A | 3 |
| 22 | -- | -- | -- |
| 23 | -- | -- | -- |
| 24 | 01003581 | Switch, Ignition, 6 Pin | 1 |
| 25 | 01003649 | Strap, Battery | 1 |
| 26 | 01003712 | Switch, Plunger, NO/NO | 1 |
| 27 | 01006809 | Harness Assembly (not shown) | 1 |
| 28 | 01004040 | Grommet, .75 ID | 1 |
| 29 | 01004078 | Cable, Battery Red, 28" | 1 |
| 30 | 01009995 | Mount Bracket, Battery | 1 |

## **Lift Assembly** - Figure 16

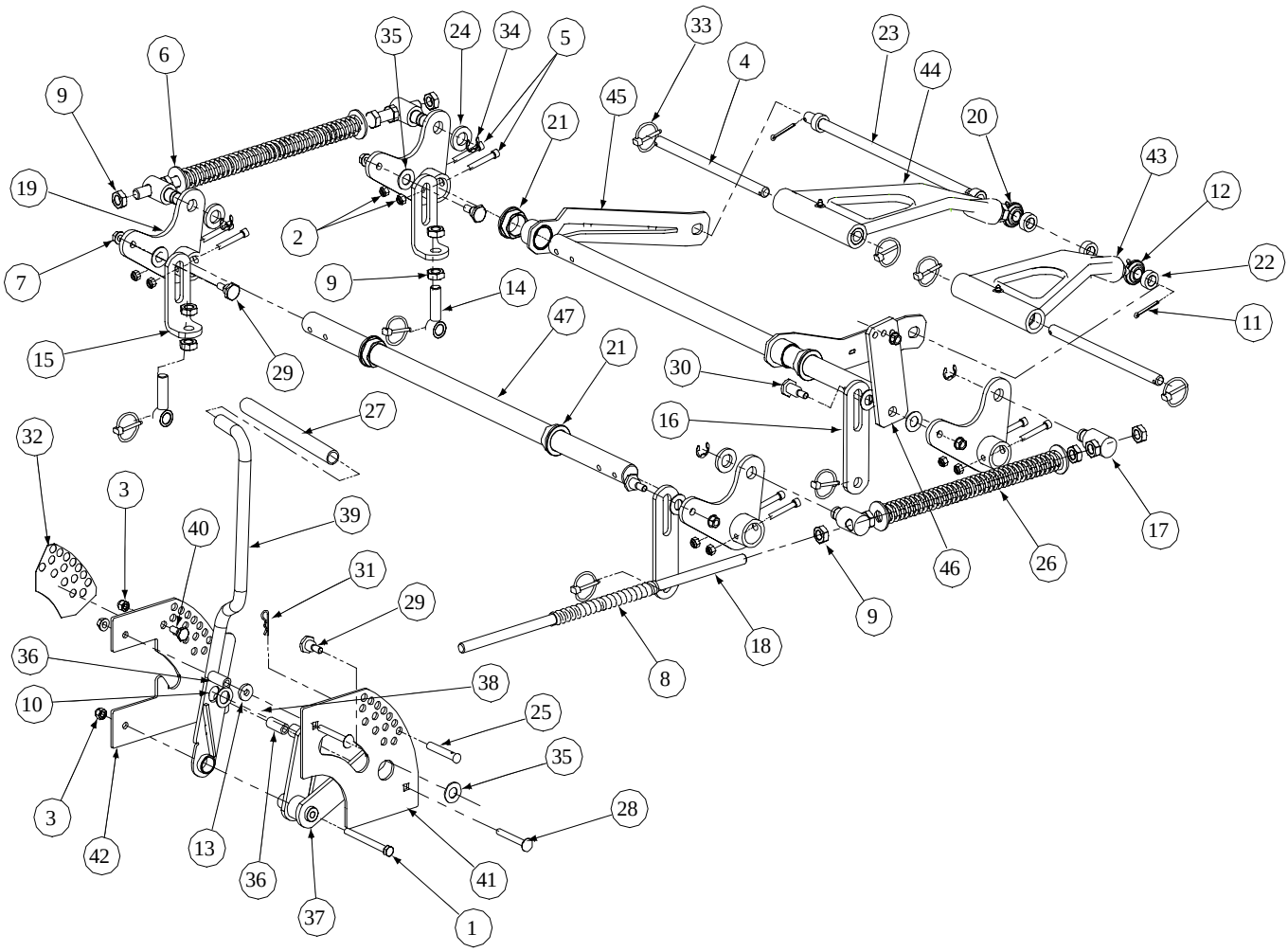


GD: 01007799-P00

# **Lift Assembly** - Parts List for Figure 16

| Ref. No. | Part No. | Description | Qty. |
|---|---|---|---|
| 1 | 00011925 | Hex Cap Screw, 3/8-16, 3.75 | 1 |
| 2 | 00012165 | Nut, 5/16-18, Nylock | 8 |
| 3 | 00012173 | Nylock Insert Lock Nut, 3/8-16 | 2 |
| 4 | 01007544 | Deck Lift Link Rod | 2 |
| 5 | 01007962 | Socket Head Screw, 5/16-18 x 2 | 8 |
| 6 | 00013432 | Flat Washer, 5/8 | 4 |
| 7 | 00022560 | Hex Nut, Flange Lock, 3/8-16 | 7 |
| 8 | 01006823 | Hose, 5/8 ID 13/16 OD, 8" LG | 2 |
| 9 | 00035632 | Jam Nut, 5/8-11 | 14 |
| 10 | 00060017 | Flat Washer, .06, .776, 1.25 | 1 |
| 11 | 00060018 | Cotter Pin, 3/16 x 1-1 | 2 |
| 12 | 01007487 | Male Rod End, Right Hand | 2 |
| 13 | 00083192 | Idler Washer | 1 |
| 14 | 01001744 | Eye Bolt, 5/8ID | 2 |
| 15 | 01004917 | Eye Bolt Mount Link, 5/8 ID | 2 |
| 16 | 01004918 | Deck Link | 2 |
| 17 | 01001855 | Ferule Lift | 4 |
| 18 | 01001857 | Lift Connector Rod | 2 |
| 19 | 01008207 | Bellecrank Weldment Lift | 4 |
| 20 | 01007526 | Jam Nut, 5/8-18 | 2 |
| 21 | 01001930 | Hex Flange Bearing, 1.25 ID | 4 |
| 22 | 01007527 | Spacer, .630 x 1.06 x .440 | 4 |
| 23 | 01002586 | Front Lift Link, Rod Mount | 1 |
| 24 | 01003123 | Spacer, .812 ID x .218 Lg. | 3 |
| 25 | 01008652 | Clevis Pin, .437 Dia. x 2.625 Lg. | 1 |
| 26 | 01003318 | Lift Compression Spring | 2 |
| 27 | 01007561 | Lift Handle Grip | 1 |
| 28 | 01003534 | Carriage Bolt, 3/8-16, 2.75 | 2 |
| 29 | 01003535 | Shoulder Screw, 0.625 OD x .437 Lg. | 4 |
| 30 | 01003536 | Shoulder Screw, 0.625 OD x .830 Lg. | 1 |
| 31 | 01003537 | Cotter Pin, .148 x 3.00 | 1 |
| 32 | 01008671 | Decal Height Indicator | 1 |
| 33 | 01003993 | Linch Pin, 3/16 Dia. | 8 |
| 34 | 01003994 | E Clip, 3/4 Dia. | 4 |
| 35 | 01004003 | Nylon Flat Washer, 5/8 | 6 |
| 36 | 01004080 | Spacer, .39 ID x .63 OD x 1.442 | 2 |
| 37 | 01004924 | Lift Pivot Assembly | 1 |
| 38 | 01004971 | Lift Handle Spring | 1 |
| 39 | 01007469 | Lift Handle Assembly | 1 |
| 40 | 01004118 | Shoulder Screw, .50 OD x 0.270, 3/8-16 | 1 |
| 41 | 01008627 | Outer Lift Index Plate | 1 |
| 42 | 01008628 | Inner Lift Index Plate | 1 |
| 43 | 01007804 | Trail Link Assembly, w/ brg Right Hand | 1 |
| 44 | 01007802 | Trail Link Assembly, w/ brg Left Hand | 1 |
| 45 | 01008209 | Front Frame Strut Assembly | 2 |
| 46 | 01006365 | Lift Link Adjustment | 1 |
| 47 | 01007681 | Deck Lift Shaft | 2 |

# **Foot Pedal Deck Lift Assembly** - Figure 17 and Part List

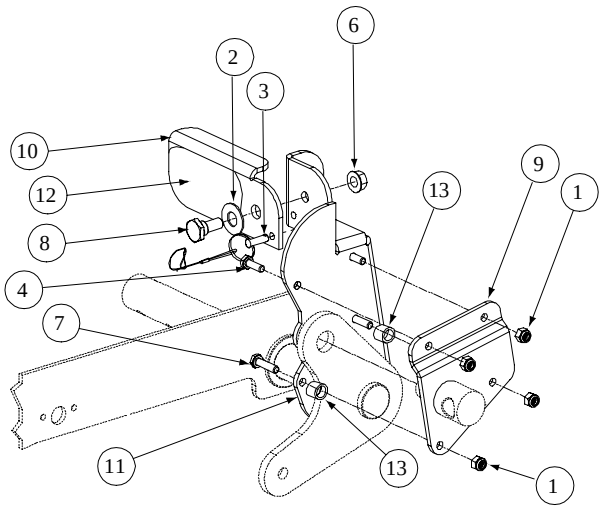


GD: 01008360-P01

| Ref. No. | Part No. | Description | Qty. |
|---|---|---|---|
| 1 | 00012152 | Lock Nut, Nylon Insert, 1/4-20 | 4 |
| 2 | 00012577 | Washer, 1/2 x 1 Shim | 1 |
| 3 | 01006786 | Detent Pin w/12" Lanyard | 1 |
| 4 | 00013131 | Hex Cap Screw, 1/4-20, .75 | 2 |
| 5 | -- | -- | -- |
| 6 | 00022560 | Hex Nut, Flange Lock 3/8-16 | 1 |
| 7 | 01000944 | Hex Cap Screw, 1/4-20, 1.00 | 2 |
| 8 | 01004118 | Shoulder Screw, .50 x .27 Lg., 3/8-16 | 1 |
| 9 | 01006409 | Foot Lift Backup Pedal | 1 |
| 10 | 01006352 | Deck Lift Foot Pedal | 1 |
| 11 | 01008359 | Deck Lift Foot Pedal | 1 |
| 12 | 01006418 | Deck Lift Foot Pad | 1 |
| 13 | 00062715 | Turnbuckle Sleeve | 2 |

# **Floor Panel Assembly**- Figure 18 and Parts List

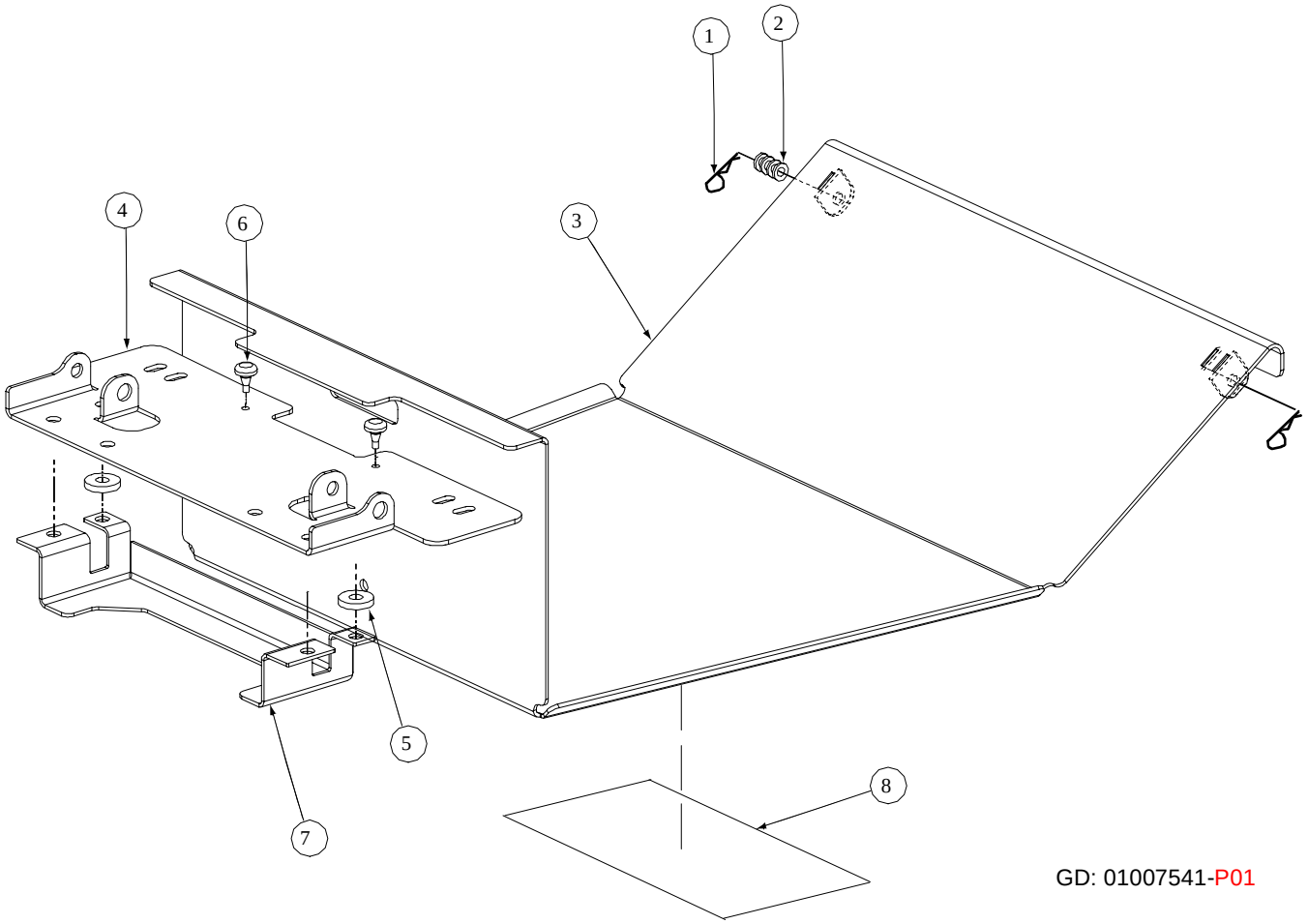


GD: 01007541-P01

| Ref. No. | Part No. | Description | Qty. |
|---|---|---|---|
| 1 | 00021956 | Hair Pin, 3/8-1/2 | 2 |
| 2 | 00012158 | Washer | AR |
| 3 | 01007560 | Floor Panel Assembly | 1 |
| 4 | 01001638 | Panel Seat | 1 |
| 5 | 00083192 | Washer | 2 |
| 6 | 01001170 | Rubber Bumper, .62 OD x .22 Thick | 2 |
| 7 | 01004726 | Support, Seat Bracket | 1 |
| 8 | 01004992 | Label, Belt Routing and Lubrication | 1 |




Cub Cadet Commercial
P.O. Box 368023
Cleveland, OH 44136

Form No. 01008085 Rev. 04-0 03/26/2004