Cub Cadet
COMMERCIAL

Hydrostatic Zero-Turn Commercial Riding Mower

Professional Turf Equipment

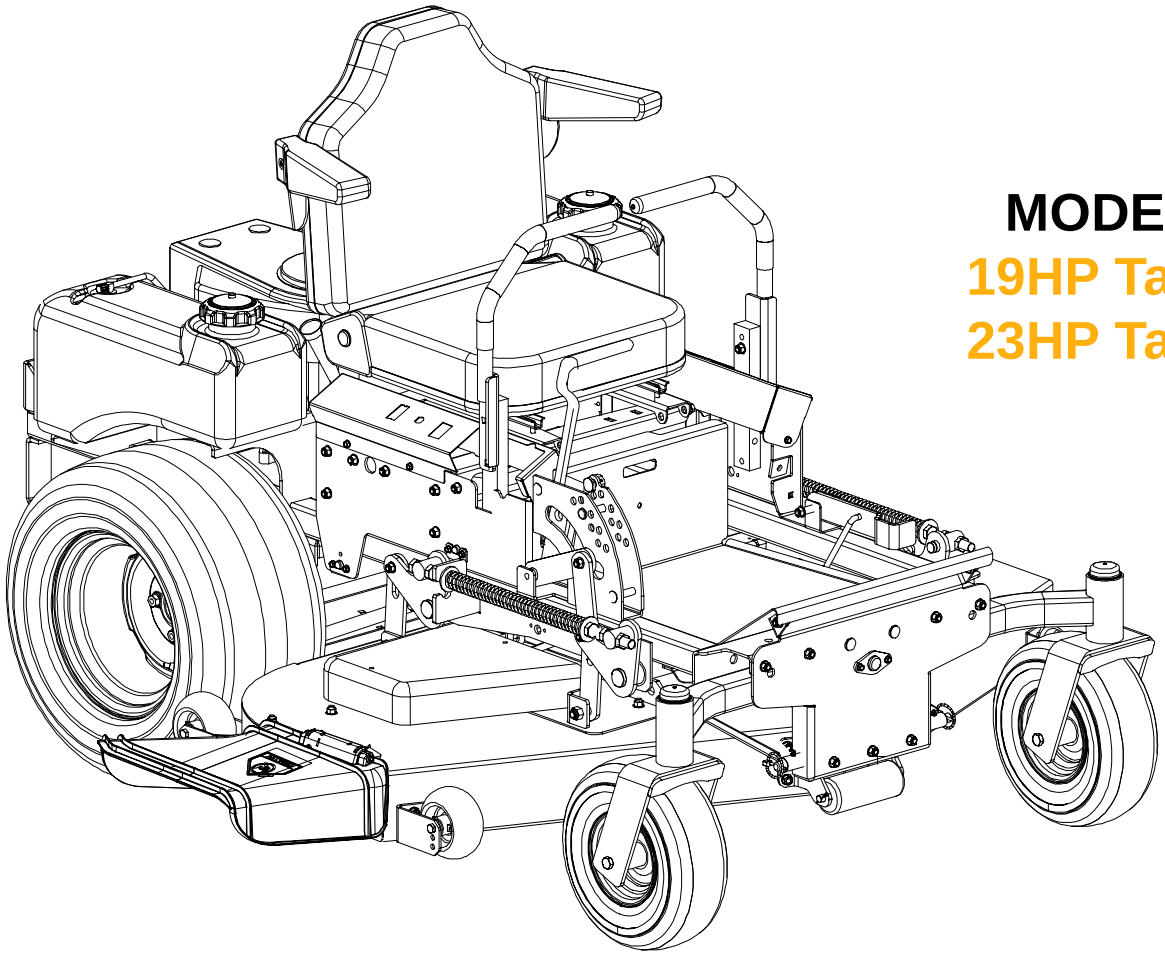

MODEL

19HP Tank

23HP Tank

ILLUSTRATED PARTS LIST

TABLE OF CONTENTS

Frame Assembly 3
48" Fabricated Cutter Deck. . . . . 4 and 5
48" Spindle Assembly . . . . . 6 and 7
54" Fabricated Cutter Deck. . . . . 8 and 9
54" Spindle Assembly . . . . . 10 and 11
Hydro Pump Assembly . . . . . 12 and 13
Brake Assembly . . . . . 14 and 15
Fuel Tank Assembly 16
Rear Bumper 17
Front Caster Assembly . . . . . 18 and 19
48" Wheel Assembly. 20
54" Wheel Assembly. 21
Control Assembly . . . . . 22 and 23
Drive Assembly. 24
Seat Assembly 25
19 HP/23 HP Kawaskai Engine Assembly . . . . . 26 and 27
19HP/23 HP Electrical Assembly Kawasaki . . . . . 28 and 29
Lift Assembly . . . . . 30 and 31
Floor Panel Assembly 32
Assembly Pump Right Hand. 33
Assembly Pump Left Hand 34

Frame Assembly- Figure 1 and Parts List

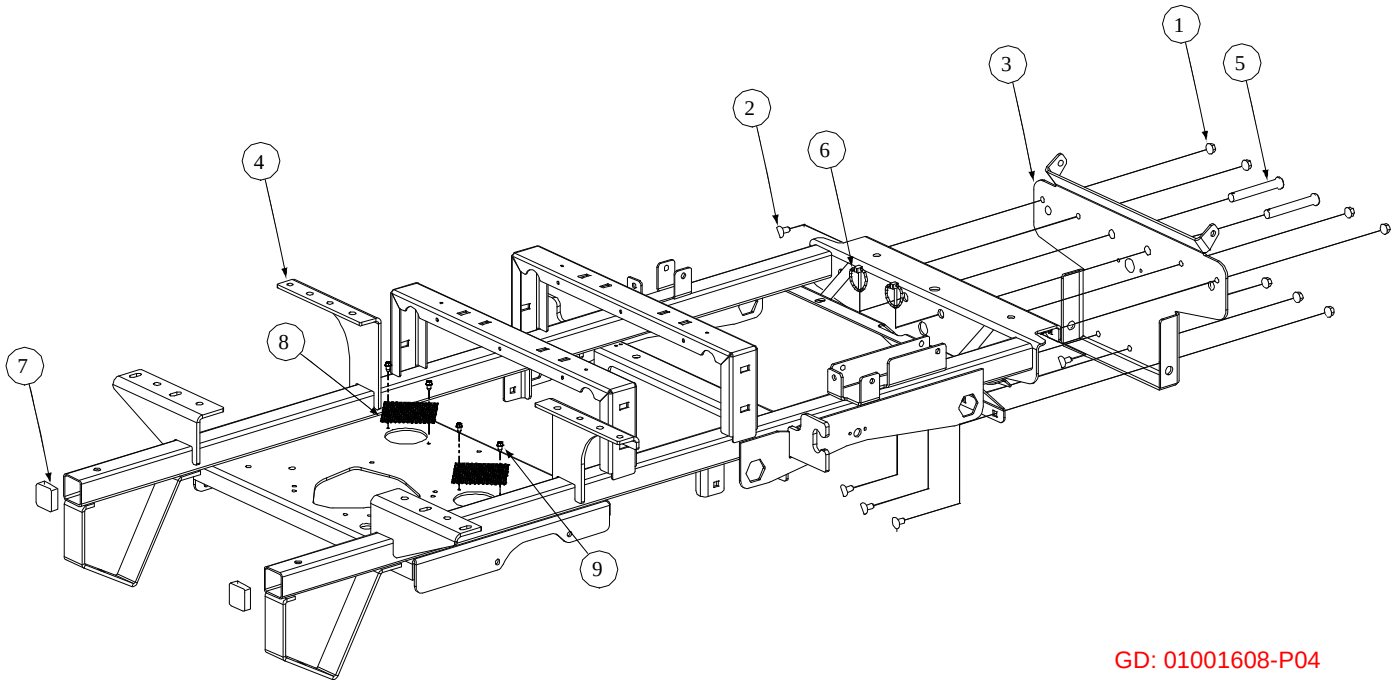

GD: 01001608-P04

Ref. No.	Part No.	Description	Qty.
1	00022560	Hex Nut, 3/8-16 Flange Lock	7
2	01000372	Carriage Bolt, 3/8-16 x .75 Long	7
3	01001713	Bracket Assembly, Frame, Front	1
4	01001617	Frame Assembly	1
5	01003282	Clevis Pin, .500 Dia x 4.375 Long	2
6	01003993	Linch Pin, 3/16 Dia.	2
7	01005160	Plug, Square Tube	2
8	01005680	Cover, Hydro Fan	2
9	01000628	Screw, TT, 1/4-20, 0.5	4

48" Fabricated Cutter Deck - Figure 2

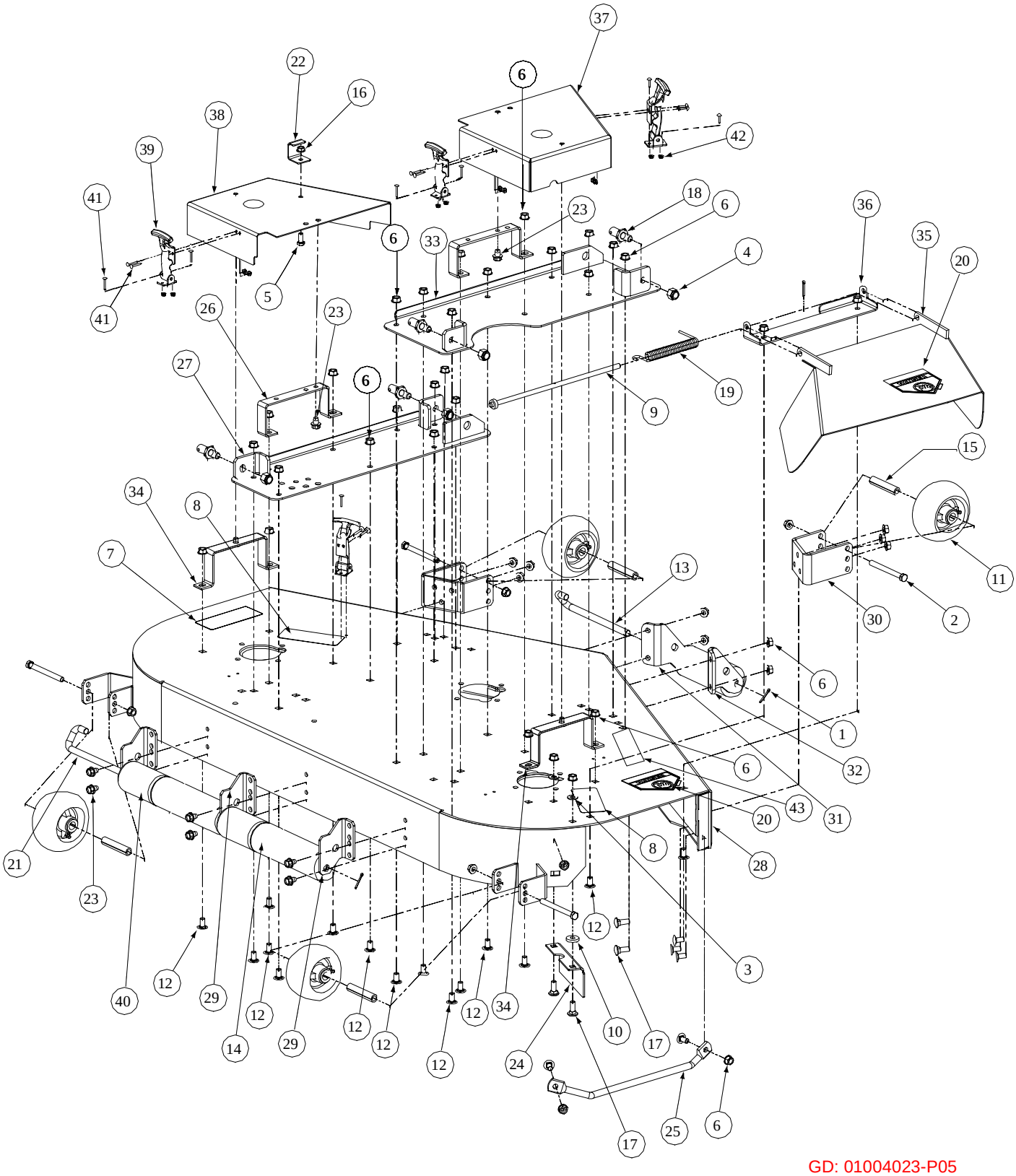

GD: 01004023-P05

48" Fabricated Cutter Deck - Parts List for Figure 2

Ref. No.	Part No.	Description	Qty.
1	00003107	Cotter Pin, .125 Dia. x 1.0	3
2	00011925	Hex Cap Screw, 3/8-16, 3.75	2
3	00012158	Flat Washer, 3/8	2
4	00012428	Lock Nut, Nylon Insert, 1/2-13	4
5	00013406	Hex Cap Screw, 5/16-18 x 3/4	1
6	00022560	Flange Lock Hex Nut, 3/8-16	44
7	00030633	Decal Rotating Blade	1
8	00030635	Decal Warning Shield Missing	2
9	00030644	Deflector Pivot Assembly, Pin	1
10	00083192	Idler Washer	1
11	01000343	Complete Wheel, 5.00 Dia	2
12	01000372	Carriage Bolt, 3/8-16 x .75 Lg	36
13	01000375	Roller Pin, 1/2 Dia x 7.31 Lg	1
14	01000385	Front Roller	3
15	01000398	Wheel Spacer	2
16	01000635	Hex Flange Lock Nut, 5/16-18	1
17	01000643	Carriage Bolt, 3/8-16 x 1	6
18	01001745	Pin, 5/8 Dia. x 1.2 Lg.	4
19	01002037	Torsion Spring	1
20	01002166	Decal, Danger Hands and Feet	2
21	01004751	Roller Rod	1
22	01004109	Bracket Stop Tension Rod	1
23	01004304	Hex Index Washer Screw, 3/8-16, .05	8
24	01005355	Fabricated Deck, Chute Bracket	1
25	01004628	Fabricated Deck Finger Guard	1
26	01004685	Fabricated Belt Support Cover	2
27	01005548	Left Hand Deck Bracket Assembly	1
28	01004699	48 Fabricated Deck Assembly	1
29	01005364	Fabricted Deck Roller Mount Bracket	3
30	01005260	Front Anti-Scalp Wheel Mount Bracket	2
31	01005256	Left Hand Front Roller Mount Bracket	1
32	01005258	Right Hand Front Roller Mount Bracket	1
33	01005345	Right Hand Deck Bracket Assembly	1
34	01005437	Outer Belt Cover Support Assembly	2
35	01005584	Chute Assembly	1
36	01005622	Deck Chute Mounting Bracket	1
37	01005724	Right Hand Belt Cover	1
38	01005725	Left Hand Belt Cover	1
39	01005869	Latch Drawing, T-Handle	4
40	01001169	Roller	2
41	00017778	Phillip Head Screw, 10-32	16
42	00014608	Lock Nut, Nylon Insert, 10-32	16
43	01006087	Mower Deck Label	1

48" Fabricated Deck Spindle Assembly - Figure 3

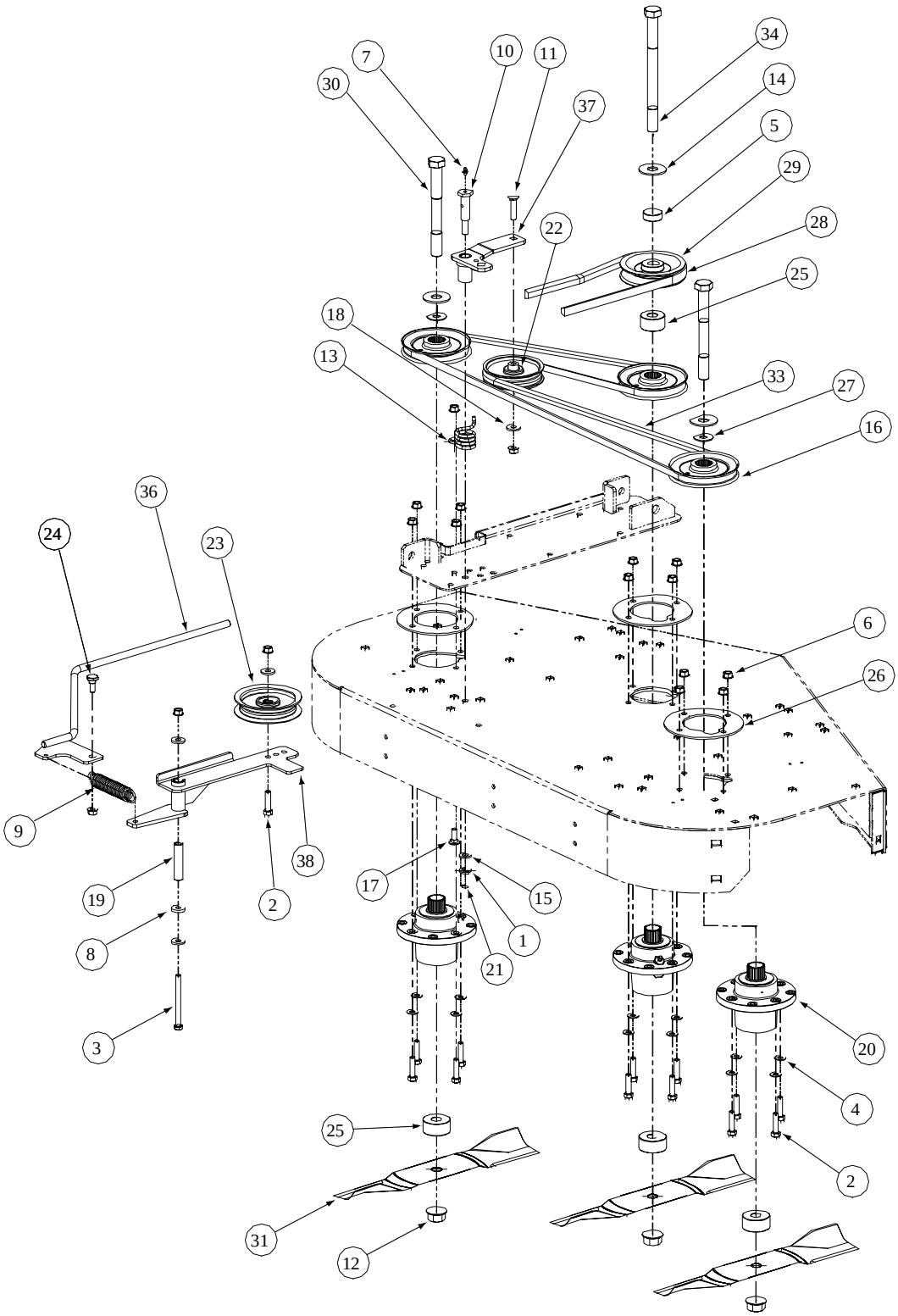

GD: 01004024-P02

48" Fabricated Deck Spindle Assembly - Parts List for Figure 3

Ref. No.	Part No.	Description	Qty.
1	01000389	Lock Washer, 7/16	1
2	00011438	Hex Cap Screw, 3/8-16 x 1-1/2	13
3	00011925	Hex Cap Screw, 3/8-16, 3.75	1
4	00012158	Flat Washer, 3/8	12
5	00021925	Spacer	1
6	00022560	Hex Nut, Flange Lock, 3/8-16	17
7	00060078	Grease Fitting, 1/4-28 x 3/16	1
8	00083192	Idler Washer	1
9	01000199	Spring Extension, 1.0 OD x 5.125	1
10	01000302	Shoulder Screw, 7/16-14	1
11	01000364	Hex Carriage Screw, 3/8-16, 1.75	1
12	01000380	Hex Flange Nut, 3/4-16	3
13	01000387	Torsion Idler Spring	1
14	01000392	Flat Washer, .781 ID, 2.00 OD, .105	3
15	01000393	Flat Washer, .469 ID, .875 OD, .105	1
16	01005616	V-Pulley, 4.65 OD	3
17	01000643	Carriage Bolt, 3/8-16 x 1	1
18	01000723	Flat Washer, .406 ID, 1.0 OD, .105	4
19	01003245	Spacer, .39 ID x .625 OD x 2.75	1
20	01003532	Aluminum Spindle Assembly	3
21	00005763	Hex Nut, 7/16-14	1
22	01004081	Flat Pulley	1
23	01004101	Idler Pulley, 4.06 OD w/Deep Flange	1
24	01004118	Shoulder Screw, .50 x .27 Lg., 3/8-16	1
25	01004415	Spacer, .760 ID x 2.000 OD x 1.1	4
26	01005434	Spindle, Aluminum Cast Support Plate	3
27	01003123	Spacer, .812 ID x .268 LG	2
28	01005011	V-Belt, B Section x 83.2	1
29	01005202	V-Pulley, 4.75 OD	1
30	01005213	Hex Cap Screw, 3/4-16, 7.00	2
31	01005336	Blade, 17.0, Hi-Lift, 0.756 ID	3
32	-	-	-
33	01005374	V-Belt, A Section x 105.3	1
34	01005388	Hex Cap Screw, 3/4-16, 9.00	1
35	-	-	-
36	01005690	Spring Tension Rod Assembly	1
37	01005737	Idler Arm Assembly, Deck Spindle	1
38	01006181	Idler Arm Assembly, Flat Top Bearing	1

54" Fabricated Deck Assembly - Figure 4

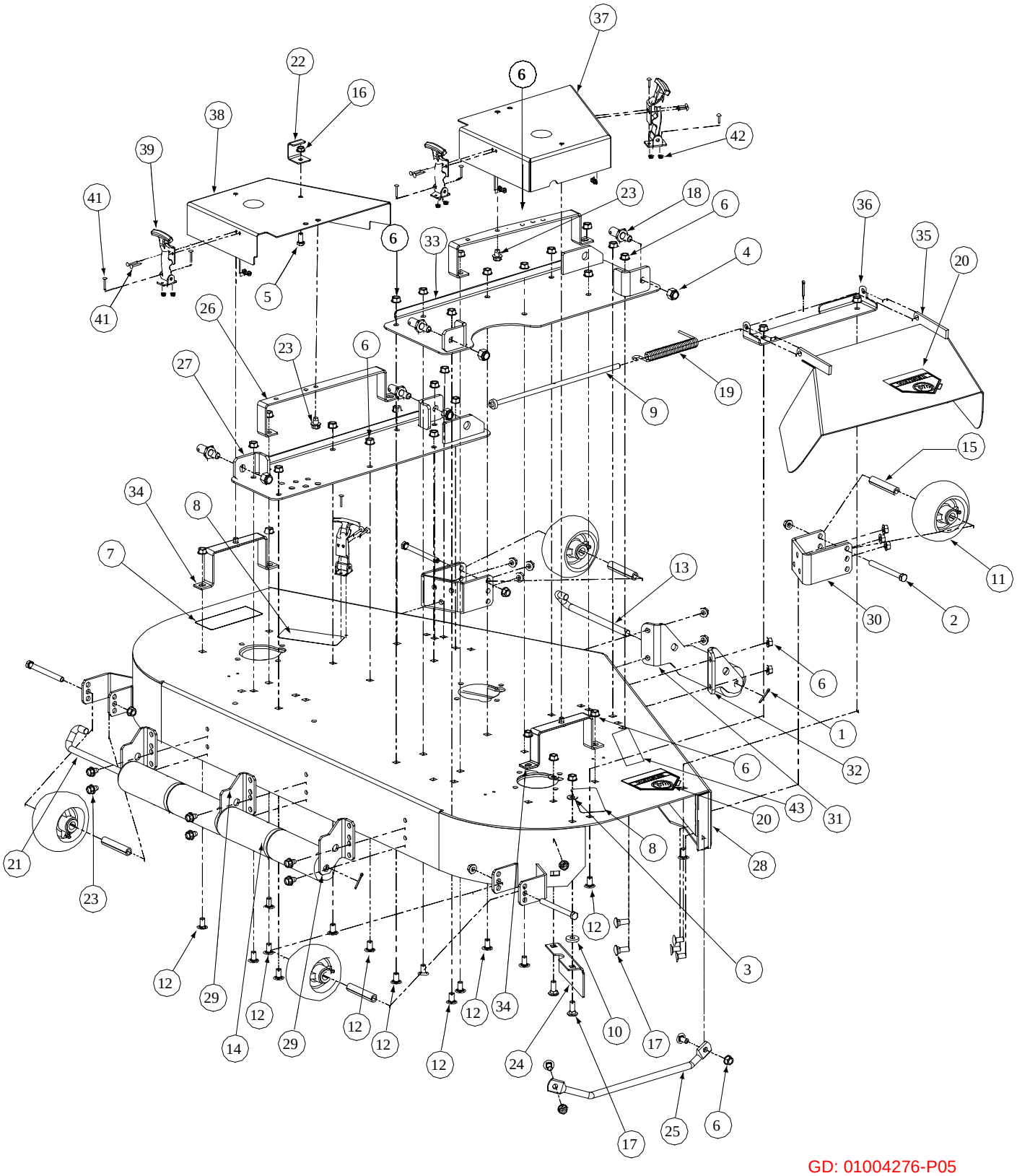

54" Fabricated Deck Assembly - Parts List for Figure 4

Ref. No.	Part No.	Description	Qty.
1	00003107	Cotter Pin, .125 Dia x 1.0	3
2	00011925	Hex Cap Screw, 3/8-16, 3.75	4
3	00012158	Flat Washer, 3/8	4
4	00012428	Lock Nut, Nylon Insert, 1/2-13	4
5	00013406	Hex Cap Screw, 5/16-18 x 3/4	1
6	00022560	Hex Nut, 3/8-16 Flange Lock	46
7	00030633	Decal Rotating Blade	1
8	00030635	Decal, Warning Shield Missing	2
9	00030644	Pin, Deflector Pivot Assembly	1
10	00083192	Idler Washer	1
11	01000343	Complete Wheel, 5.00 Dia.	4
12	01000372	Carriage Bolt, 3/8-16 x .75 Lg.	36
13	01000375	Roller Pin. 1/2 Dia. x 7.31 Lg.	1
14	01000385	Front Roller	5
15	01000398	Wheel Spacer	4
16	01000635	Hexflange Lock Nut, 5/16-18	1
17	01000643	Carriage Bolt, 3/8-16 x 1	6
18	01001745	Pin, 5/8 Dia. x 1.2 Lg.	4
19	01002037	Spring Torsion	1
20	01002166	Decal, Danger Hands and Feet	2
21	01002635	Roller Pin	1
22	01004109	Tension Rod Stop Bracket	1
23	01004304	Hex Index Washer Screw, 3/8-16, .5	8
24	01005355	Chute Bracket	1
25	01004628	Finger Guard	1
26	01004685	Cover Support	2
27	01005342	Left Hand Mount, Deck Bracket Assembly	1
28	01004696	54 Deck Assembly	1
29	01005364	Roller Mount Bracket	3
30	01005260	Anti-Scalp Wheel, Front Mount Bracket	2
31	01005256	Left Hand Front Roller Mount Bracket	1
32	01005258	Right Hand Front Roller Mount Bracket	1
33	01005345	Deck Bracket Assembly	1
34	01005437	Outer Belt Cover Support Assembly	2
35	01005584	Chute Assembly	1
36	01005622	Chute Deck, Bracket Mount	1
37	01007137	Right Hand Belt Deck Cover Weldment	1
38	01007136	Left Hand Belt Deck Cover Weldment	1
39	01005869	T-Handle Draw Latch	4
40	--	--	--
41	00017778	Phillips Head Screw, 10-32	16
42	00014608	Lock Nut, Nylon Insert, 10-32	16
43	01006086	Mower Deck Label	1

54" Fabricated Deck Spindle Assembly - Figure 5

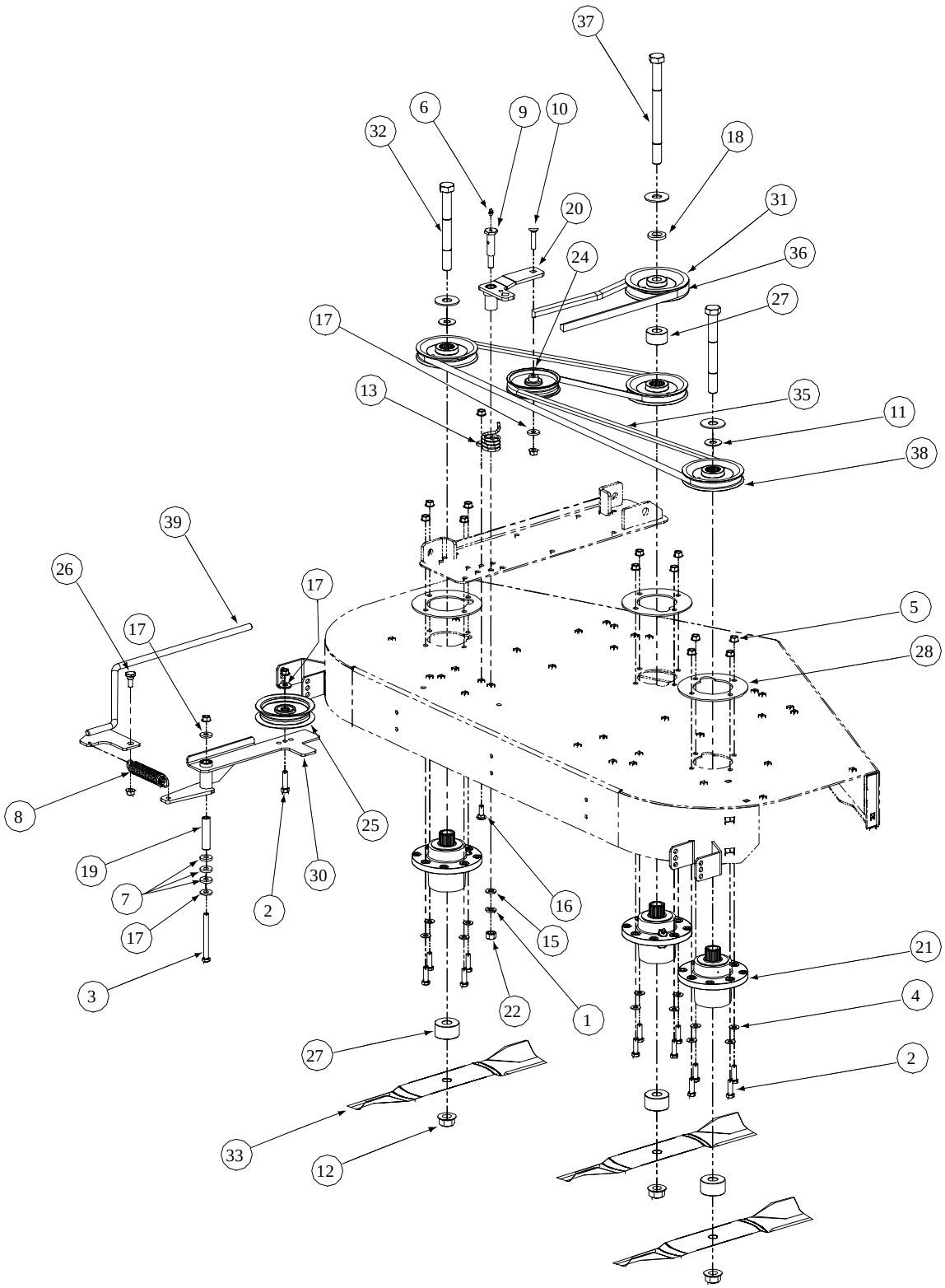

GD: 01004277-P02

54" Fabricated Deck Spindle Assembly - Parts List for Figure 5

Ref. No.	Part No.	Description	Qty.
1	01000389	Lock Washer, 7/16	1
2	00011438	Hex Cap Screw, 3/8-16 x 1-1/2	13
3	00011925	Hex Cap Screw, 3/8-16, 3.75	1
4	00012158	Flat Washer, 3/8	12
5	00022560	Hex Nut, Flange Lock, 3/8-16	17
6	00060078	Grease Fitting, 1/4-28 x 3/16	1
7	00083192	Idler Washer	3
8	01000199	Extension Spring, 1.0 OD x 5.125	1
9	01000302	Shoulder Screw, 7/16-14	1
10	01000364	Hex Carriage Screw, 3/8-16, 1.75	1
11	01003123	Spacer, .812 ID x .268 LG	2
12	01000380	Flange Hex Nut, 3/4-16	3
13	01000387	Torsion Spring Idler	1
14	01000392	Flat Washer, .781 ID, 2.00 OD, .105	3
15	01000393	Flat Washer, .469 ID, .875 OD, .105	1
16	01000643	Carriage Bolt, 3/8-16 x 1	1
17	01000723	Flat Washer, .406 ID, 1.0 OD, .105	4
18	00021925	Spacer	1
19	01003245	Spacer, .39 ID x .625 OD x 2.75	1
20	01005737	Idler Arm Assembly, Deck Spindle	1
21	01003532	Spindle Assembly, Aluminum Fab Deck	3
22	00005763	Hex Nut, 7/16-14	1
23	--	--	--
24	01004081	Flat Pulley	1
25	01004101	Idler Pulley, 4.06 OD w/Deep Plan Flanges	1
26	01004118	Shoulder Screw, .50 x .27 LG, 3/8-16	1
27	01004415	Spacer, .760 ID x 2.000 OD x 1.1	4
28	01005434	Plate Support, Cast Aluminum Spindle	3
29	--	--	--
30	01006181	Idler Arm Assembly, Flat Top Bearing	1
31	01005201	V Pulley, 5.25 OD	1
32	01005213	Hex Cap Screw, 3/4-16, 7.00	2
33	01005337	Hi-Lift Blade, 19.0, 0.756	3
34	--	--	--
35	01005375	V Belt, A Section x 114.3	1
36	01005378	V Belt, B Section x 87.3	1
37	01005388	Hex Cap Screw, 3/4-16, 9.00	1
38	01005616	V Pulley, 4.65 OD	3
39	01005690	Rod Fab Deck Spring Tension	1

Hydro Pump Assembly - Figure 6

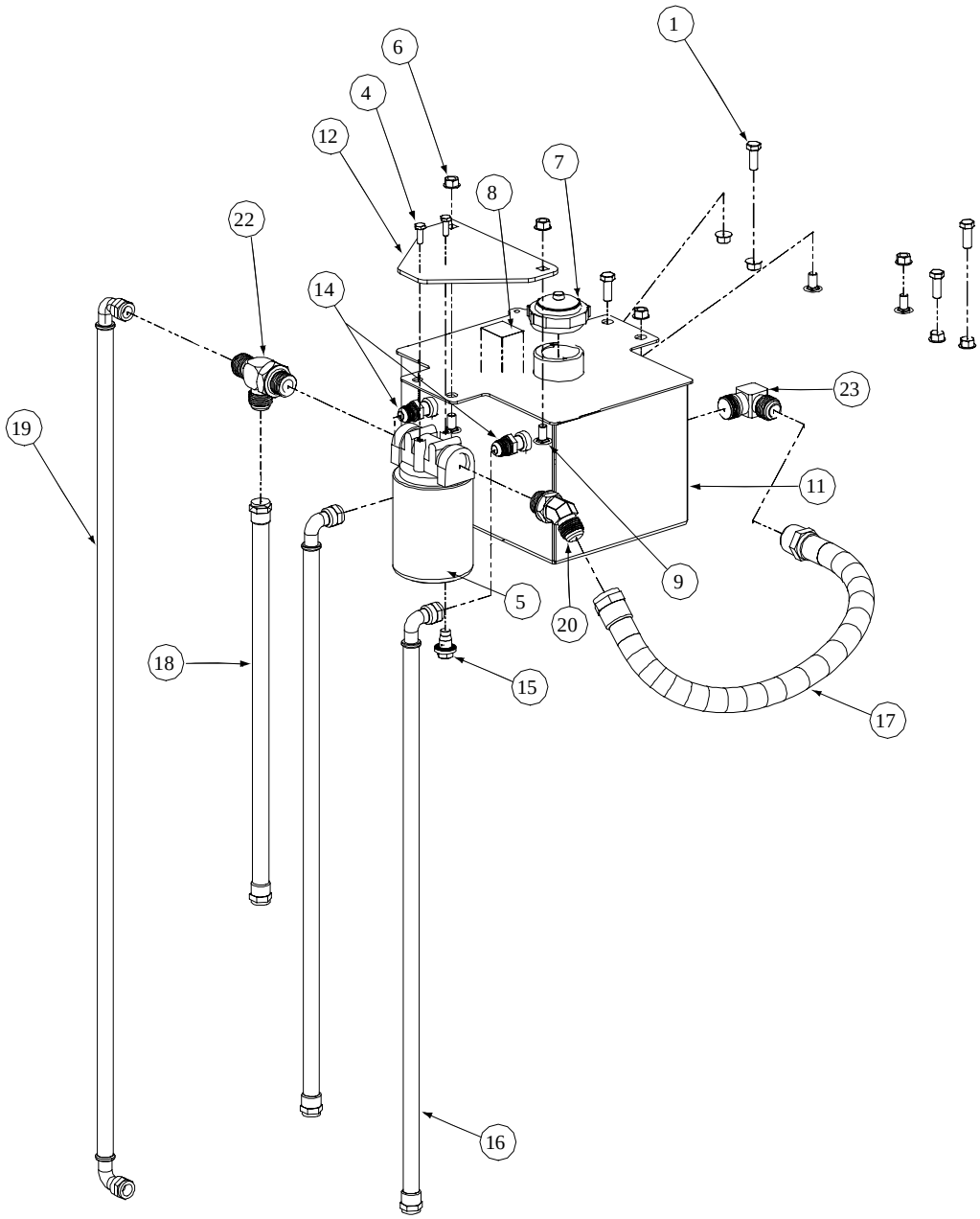

GD: 01004266-P03

Hydro Pump Assembly - Parts List for Figure 6

Ref. No.	Part No.	Description	Qty.
1	00006144	Hex Cap Screw, 3/8-16, 1	4
2	--	--	--
3	00012529	Protective Hose Cover (not shown)	1
4	00013131	Hex Cap Screw, 1/4-20, .75	2
5	00017665	Filter Head 3/4 includes:	1
	01004166	33 Micron Filter	
6	00022560	Hex Nut Flange Lock, 3/8-16	8
7	00030261	Cap, Hydro Oil Tank	1
8	00031994	Decal Oil Only 20W50	1
9	01000372	Carriage Bolt, 3/8-16 x .75 LG.	4
10	--	--	--
11	01004516	Hydraulic Tank Assembly	1
12	01001650	Mounting Plate Oil Filter	1
13	--	--	-
14	01006353	Fitting, 3/8 NPT, 1/2 Flare	2
15	01004192	Oil Pan Drain w/ Seal and Plug	1
16	01004267	Gearbox to Tank Hose Assembly	2
17	01004268	Tank to Filter Hose Assembly	1
18	01004269	Filter to Left Hand Pump Hose Assembly	1
19	01004270	Filter to Right Hand Pump Hose Assembly	1
20	01004272	Connector, 3/4 x3/4	1
21	--	--	--
22	01006959	Fitting Tee, 3/4 x 1/2 x 1/2	1
23	01004702	Fitting Elbow, 1/2 x 1/2	1

NOTE: Lubricant, 737-3120 Gallons, 3.25

Brake Assembly - Figure 7

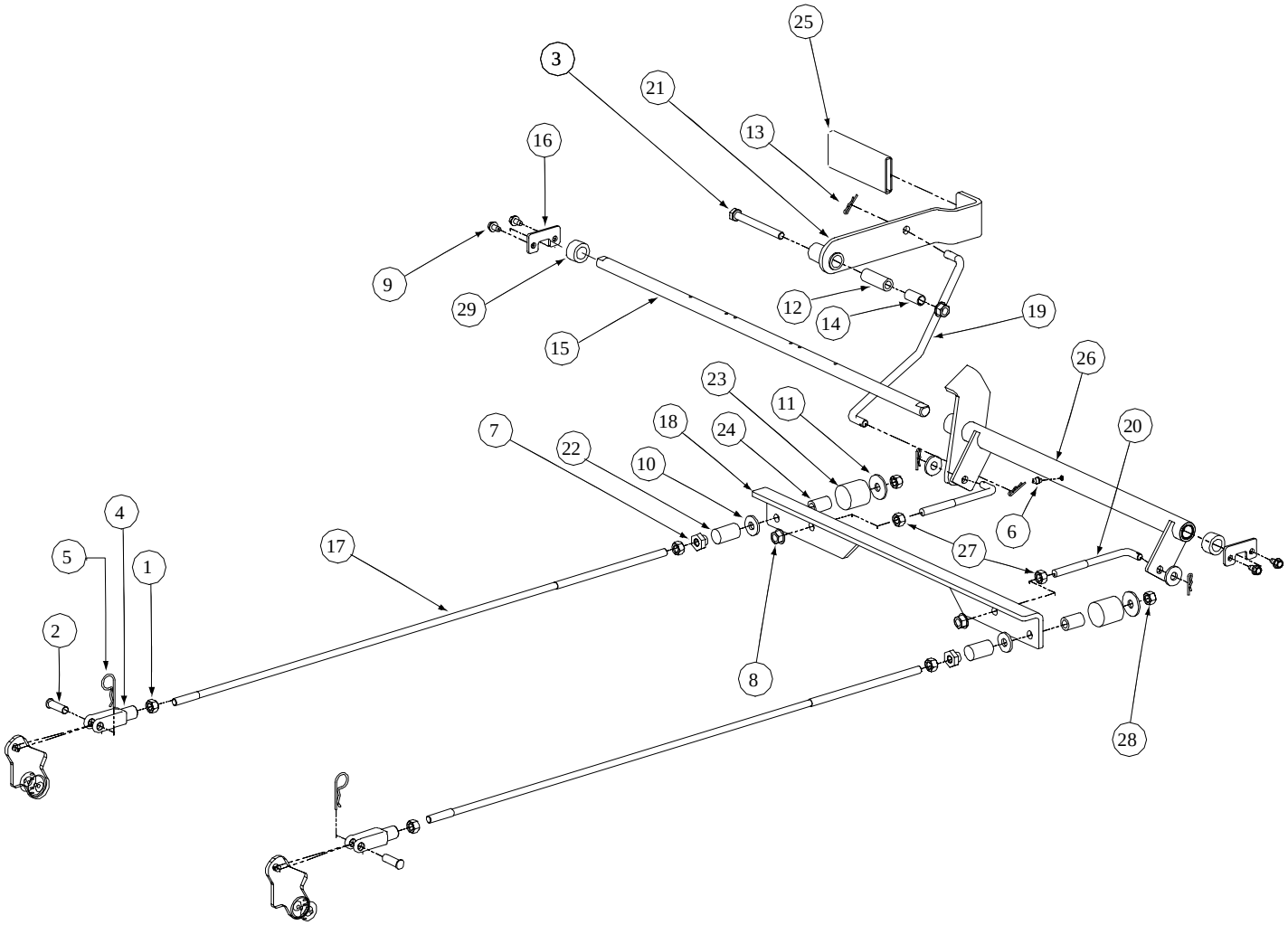

GD: 01001609-P04

Brake Assembly - Parts List for Figure 7

Ref. No.	Part No.	Description	Qty.
1	00006131	Hex Nut, 3/8-16	4
2	00009678	Clevis Pin, 3/8 x 1, 1/8	2
3	00011888	HHCS, Standard, 3/8-16 x 3-1/2	1
4	00021955	Yoke, 3/8-16, Female	2
5	00021956	Hair Pin, 3/8"-1/2"	2
6	00012226	Grease Fitting, 1/4-28, 90°	1
7	01000100	Shoulder Nut	2
8	00022560	Nut, Flange Lock, 3/8-16	3
9	01000628	Screw, TT, 1/4-20, .5, Hex Index Washer	4
10	01000723	Flat Washer, .406 ID, 1.0 OD, .105	4
11	01000872	Flat Washer, .411 x 1.25 x .100	2
12	01002751	Spacer, .39 ID x .63 OD x 1.75	1
13	01002771	Hair Pin, INT .072 x 1.12	4
14	01002772	Spacer, .375 x .50 x 1.02	1
15	01002980	Mounting Shaft, Bellcrank	1
16	01003591	Holder Shaft, Park Brake	2
17	01003410	Rod Connector, 3/8 OD 5.75	2
18	01003593	Brake Bracket	1
19	01003415	Rod Brake, Connect To Handle	1
20	01003417	Rod Connector, 3/8 OD x 33.	2
21	01003595	Weldment, Handle Brake	1
22	01003574	Brake Spring, Neutral	2
23	01003575	Brake Spring, Force	2
24	01003576	Brake Hose, Center	2
25	01003716	Grip, Park Brake	1
26	01003730	Weldment Hub, Brake Bearing	1
	01004265	Bearings	2
27	01002511	Jam Nut, 3/8-16	2
28	00012173	Lock Nut, Nylon Insert, 3/8-16	2
29	01006350	Shaft collar, .625 ID, 1" OD, .438 Lg	2

Fuel Tank Assembly - Figure 8 and Parts List

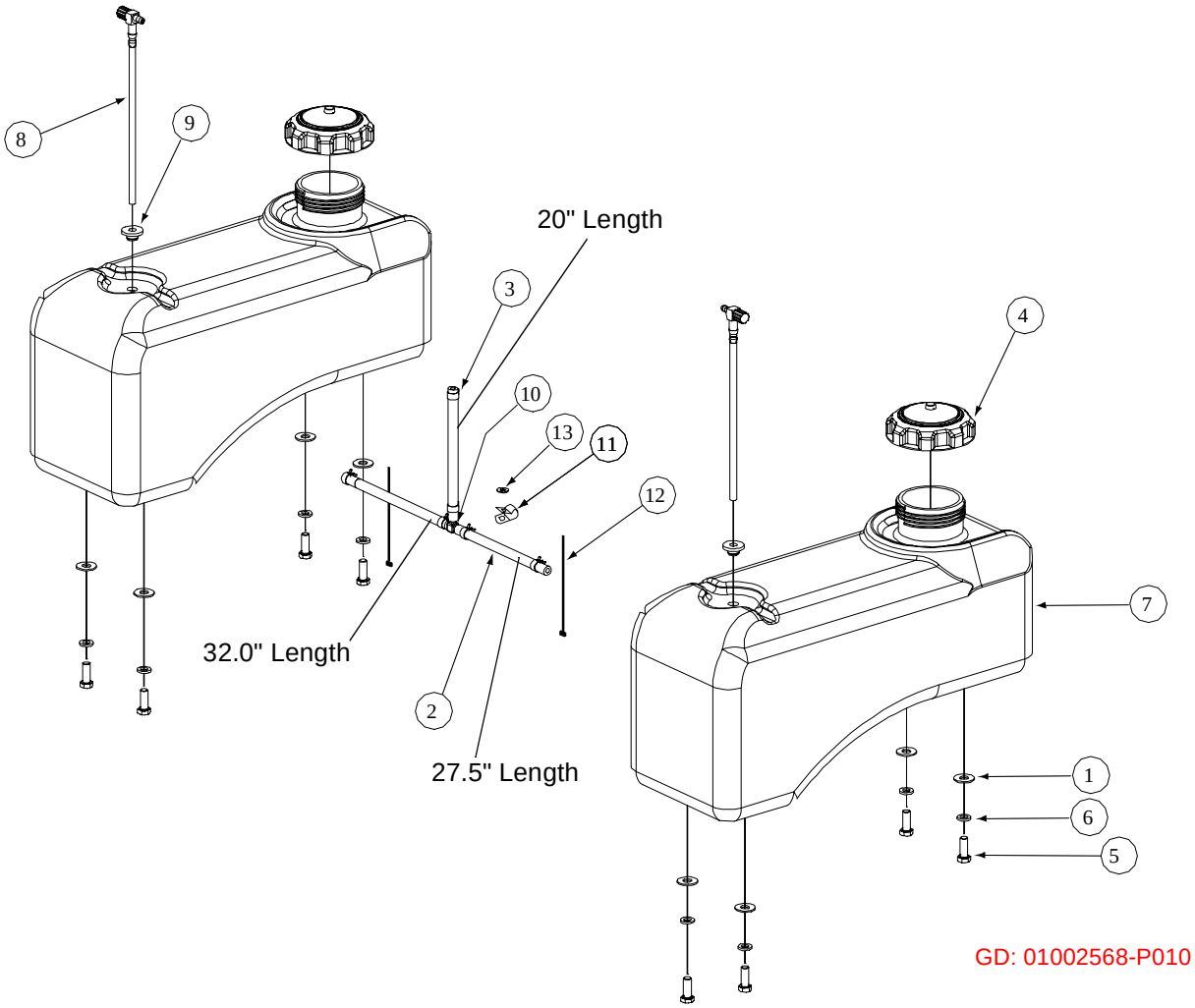

GD: 01002568-P010

Ref. No.	Part No.	Description	Qty.
1	01000723	Flat Washer, .406 ID, 1.0 OD, .105	8
2	--	Hose, 1/4" Fuel Line (in inches)	79.5
3	00012235	Clamp, Union	6
4	01000069	Fuel Cap, 3.5	2
5	01000368	Hex, Cap Screw, 3/8-16, .88	8
6	00012157	Lock Washer, 3/8	8
7	01004350	Fuel Tank	2
8	01003116	Fuel Fitting	2
9	01000281	Fuel Tank Grommet	2
10	01003473	Tee Fitting, Fuel	1
11	00031081	Clamp	1
12	00012470	Cable Tie	2
13	01000600	Flatwasher 1/4 x .630 x .0515	1

Rear Bumper - Figure 9 and Parts List

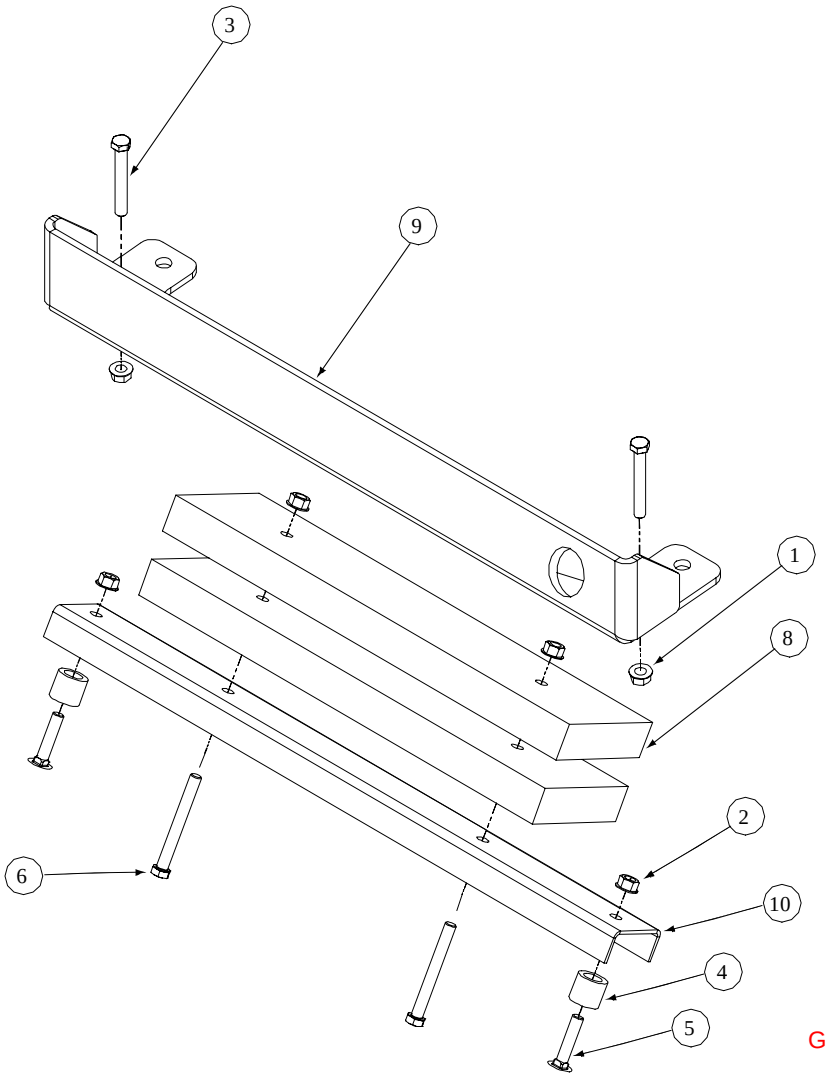

GD: 01003539-P06

Ref. No.	Part No.	Description	Qty.
1	00012428	Hex Nut, 1/2-13, Insert Lock	2
2	00022560	Nut, Hex 3/8-16 Flange Lock	4
3	00030046	HHCS, 1/2-13, 3.00	2
4	01000917	Spacer Crossbar	2
5	01000364	Carriage Bolt, 3/8-16, 1.75	2
6	01000371	HHCS, 3/8-16, 3.25	2
7	--	--	--
8	01003789	Bar, Weight	2
9	01005067	Rear Bumper Plate	1
10	01003794	Bumper Cross Bar-Rear	1

Front Caster Assembly - Figure 10

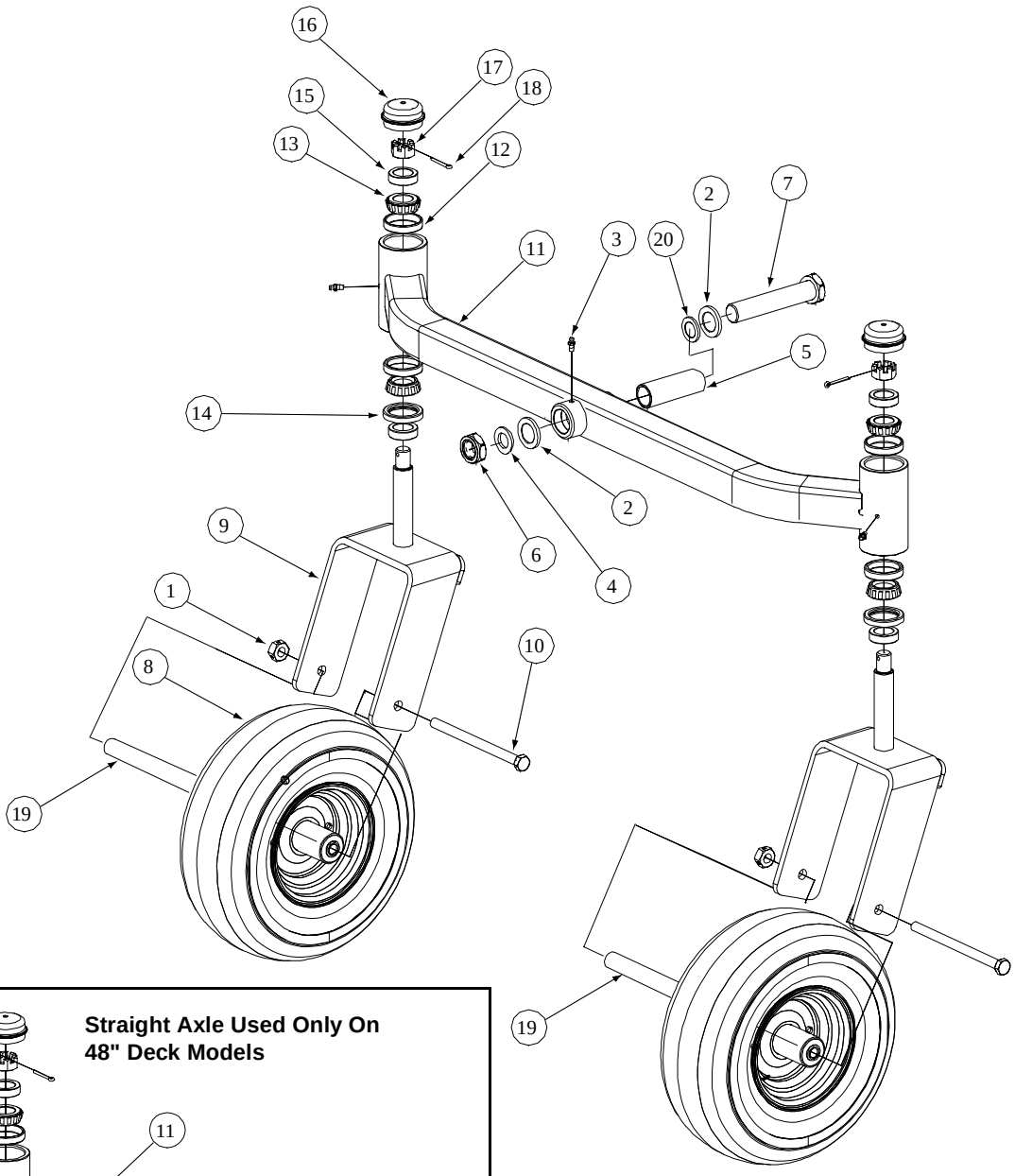

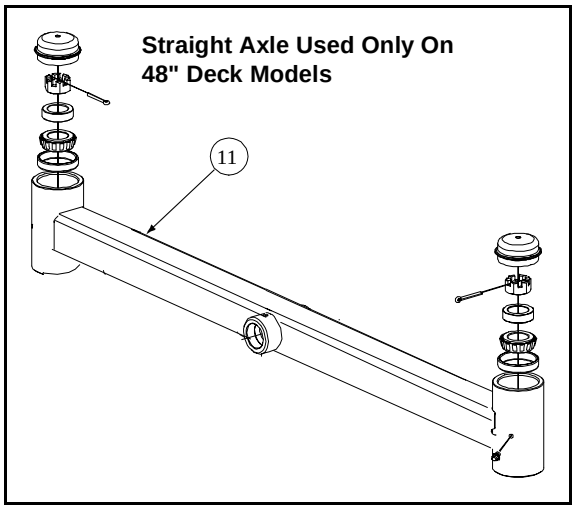

GD: 01002573-P02
GD: 01005482-P01

Front Caster Assembly - Parts List for Figure 10

Ref. No.	Part No.	Description	Qty.
1	00023287	Nut, 1/2-20, Center Lock	2
2	01006294	Bell Washer, 1.25 ID	2
3	00060078	Grease Fitting	3
4	00023822	Special Washer	1
5	01006310	Spacer, 1.005 ID x 1.25 OD x 3.6	1
6	01000678	Nut, Jam, 1.0-14, Insert Lock	1
7	01006309	Hex Cap Screw, 1-14 x 5.0	1
8	01006311	Wheel, 13 x 5-6, White: Includes;	2
	01006362	Flange Bearing	2
	01006342	Cage Roller Bearing	2
	01004472	Tire	1
9	01001625	Yoke, Caster Wheel	2
10	01002611	HHCS, 1/2-20, 7.00	2
11	01001628	Front Axle Assembly	1
	01005495	Straight Front Axle, For 48" Only	1
12	01002620	Cup Bearing	4
13	01002621	Bearing Cone	4
14	01002622	Seal	2
15	01002624	Ring Seal	4
16	01006347	Grease Cap, 1.986 OD	2
17	01002626	Slotted Nut, 3/4-16	2
18	01002627	Cotter Pin, 5/32, 1.25	2
19	01004128	Wheel Spacer	2
20	01006408	Flat Washer, 1.25 ID	1

48" Wheel Assembly - Figure 11 and Parts List

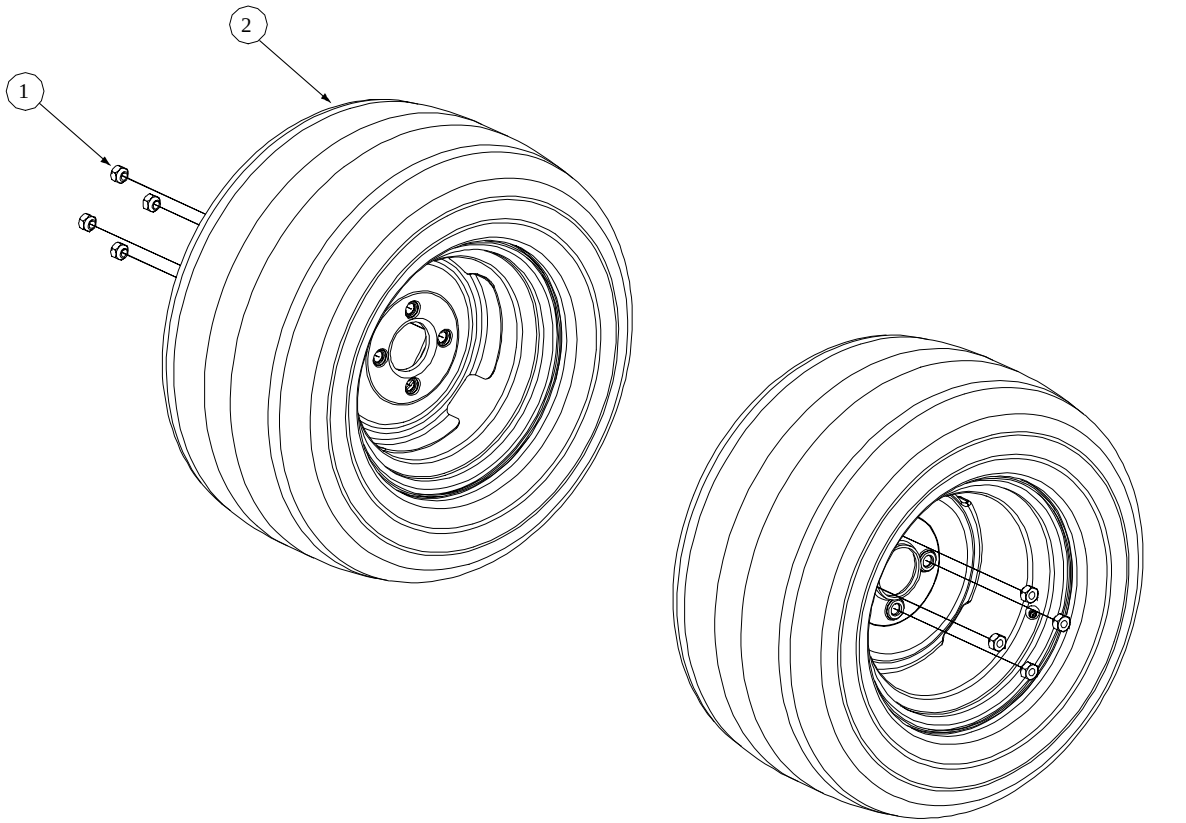

GD: 01004653-P01

Ref. No.	Part No.	Description	Qty.
1	00012187	Lug Nut, 1/2-20	8
2	01002181	Wheel Assembly, 23 x9.5-12, Dr, White: Includes	2
	01005738	Tire, Turf Saver, 23 x 9.50-12, 2-Ply	
	01006414	Rim, 12 Dia x 7.00 width, 4x4 Bolt	

54" Wheel Assembly - Figure 12 and Parts List

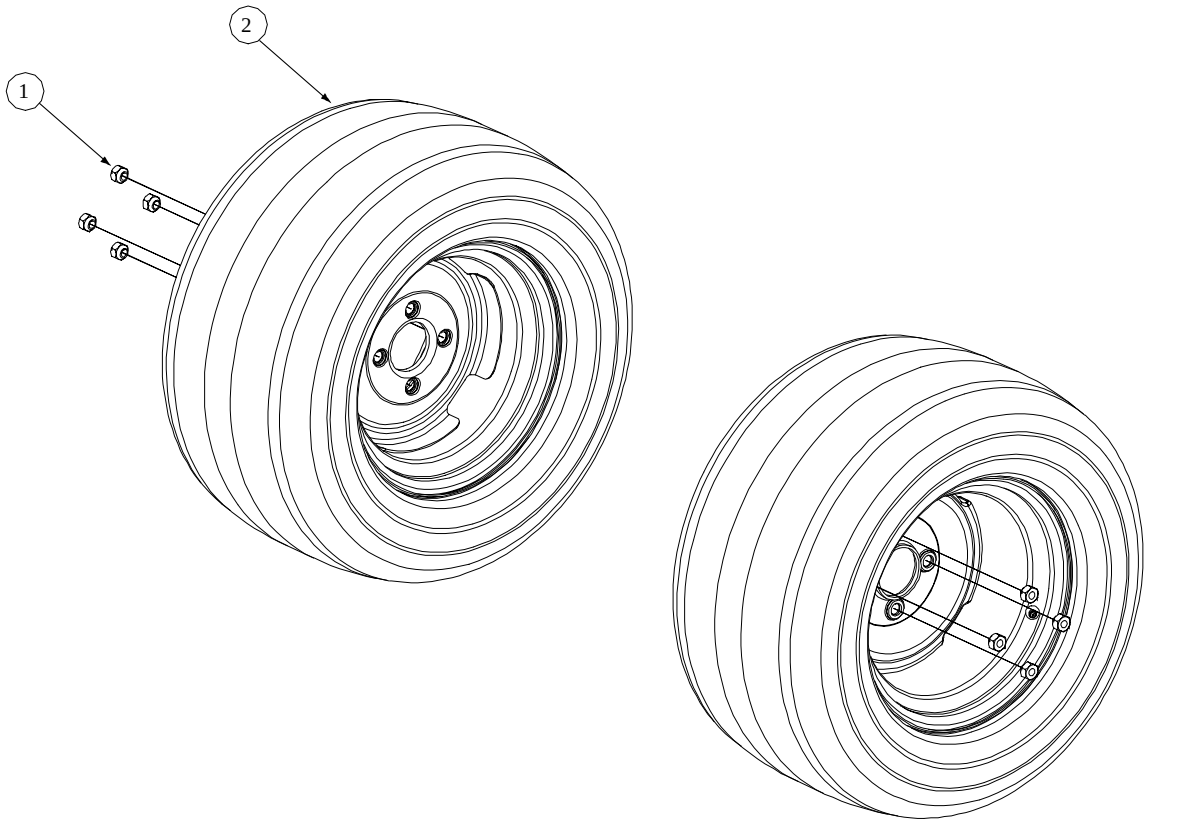

GD: 01002572-P03

Ref. No.	Part No.	Description	Qty.
1	00012187	Lug Nut, 1/2-20	8
2	01002182	Wheel Assembly, 24 x 12-8, Dr, White: Includes	2
	01004473	Tire, Turf Saver, 24 x 12.00-12, 2-Ply	
	01006413	Rim, 12 Dia x 8.50 width, 4x4 Bolt	
		OPTIONAL TIRES	
	01006324	Turf Master, Rear Wheel Assembly	

Control Assembly- Figure 13

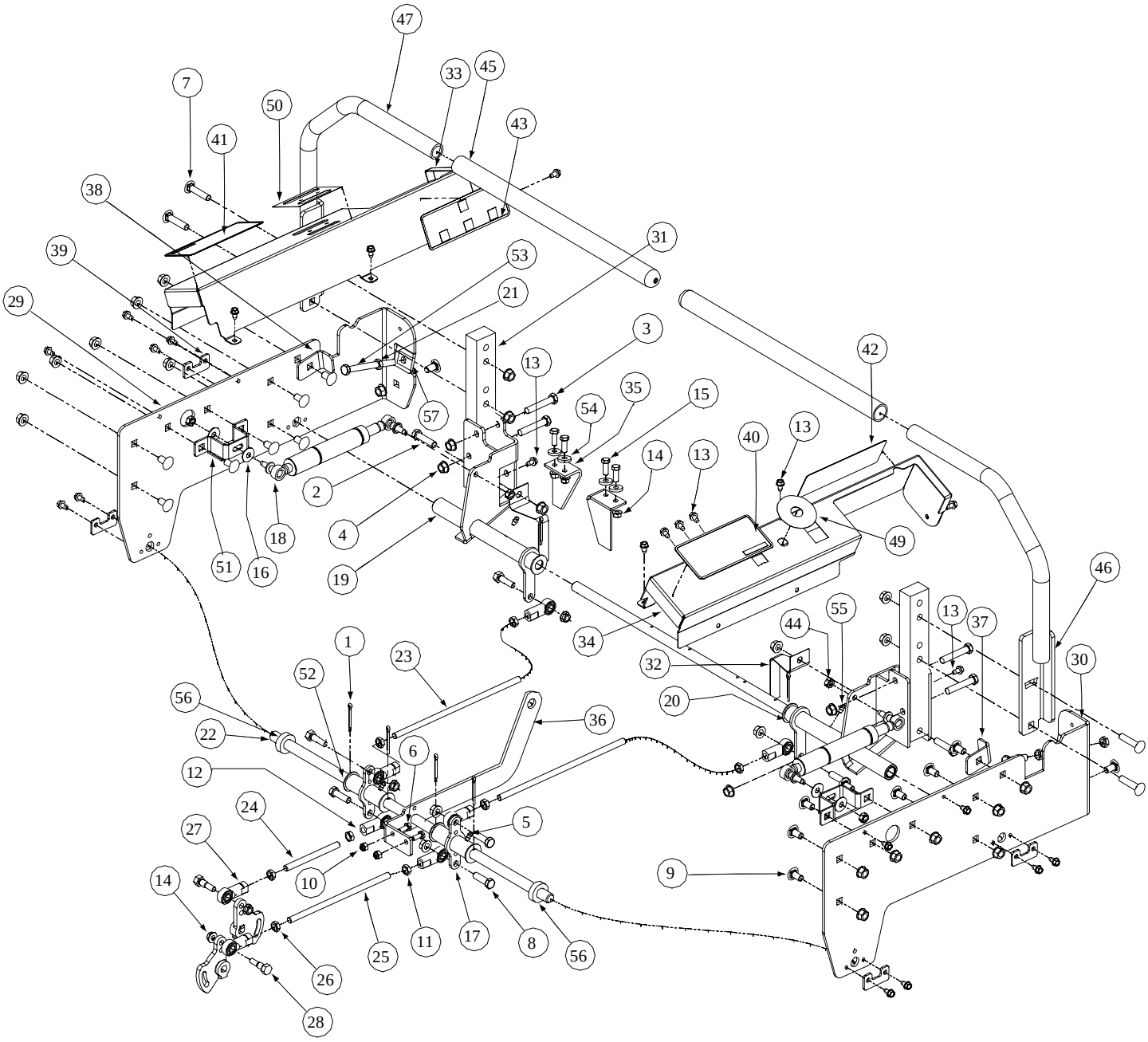

GD: 01005778-P05

Control Assembly - Parts List for Figure 13

Ref. No.	Part No.	Description	Qty.	Ref. No.	Part No.	Description	Qty.
1	00003107	Cotter Pin 5/32 x 1-1/2	6	28	01002988	Screw, Shoulder Control Rod	2
2	00010980	HHCS, 3/8-16, 2.00	2	29	01005769	Side Panel, Control, Left	1
3	00011861	HHCS, 3/8-16, 2.25	4	30	01005770	Side Panel, Control, Right	1
4	00022560	Hex Nut, 3/8-16, Lock Flange	32	31	01003009	Mounting Handle	2
5	00060078	Grease Fitting, 1/4-28 x 3/16	2	32	01003011	Lever, Safety Switch	2
6	00013131	HHCS, 1/4-20, .75	2	33	01004889	Control Panel, LH	1
7	01000364	Hex Carriage Screw, 3/8-16, 1.75	4	34	01004890	Control Panel, RH	1
8	01000369	HHCS, 3/8-16, 1.25	6	35	01003587	Switch Mounting Bracket, Lapbar	2
9	01000372	Carriage Bolt, 3/8-16 x .75	16	36	01001968	Link Mounting Control Shaft, Bracket	1
10	01000446	Lock Hex Nut, 1/4-20	2	37	01005771	Stop, RH	1
11	01000450	Hex Jam Nut, 3/8-24	4	38	01005772	Stop, LH	1
12	01000451	B/Joint, 3/8-24, Right Hand Female	4	39	01003591	Holder Shaft, Park Brake	4
13	01000628	Screw, TT, 1/4-20, 0.5, Hex Index Washer	23	40	01003449	Decal , Right Hand Console	1
14	01000635	Nut, Lock, HexFlange, 5/16-18	6	41	01003450	Decal, Left Hand Console	1
15	00013406	Hex, Cap Screw, 5/16-18 x 3/4	4	42	01003451	Decal Right Hand Control	1
16	01000960	Belle Washer, .325 x .930 x .045	4	43	01003452	Decal, Left Hand Control	1
17	01002990	Belle Crank Assembly, includes:	2	44	01003561	Nut, Hex, Center Lock, M8	4
	01000308	Bushing	2	45	01003715	Grip, 1.0	2
18	01001727	Cylinder Return to Neutral	2	46	01001615	Lapbar, Weldment, Right Handle	1
19	01003044	Hub Assy, Control LH Bearing	1	47	01003729	Lapbar, Weldment, Left Handle	1
	01004265	Bearings	2	48	-	-	-
20	01003045	Hub Assy, Control RH Bearing	1	49	01003857	Label, Ingnition, 2.5 Diameter	1
	01004265	Bearings	2	50	01003858	Label, Control, Throttle and Choke	1
21	01002511	Nut, 3/8-16, Jam	2	51	01005784	Bracket Assembly, Mount Dampener	2
22	01002980	Shaft Mounting Belle Crank	2	52	01004003	Flat Washer, 5/8 Nylon	6
23	01002982	Rod Connector 3/8 OD x 10.125	2	53	01004127	HHCS, 3/8-16, 3.00	2
24	01002983	Rod Connector, 3/8 OD x 4.28 LG LH	1	54	00009812	Flat Washer, 5/16	4
25	01002984	Rod Connector, 3/8 OD x 8.06 LG RH	1	55	00012226	Grease Fitting, 90°	2
26	01002986	Nut, 3/8-24, Jam, LH Third	4	56	01006350	Collar Shaft, .625 ID, 1" OD, .438 Lg	2
27	01002987	B/Joint, 3/8-24, LH Female	4	57	01003947	U-Nut, 3/8-16, .75	2

Drive Assembly- Figure 14 and Parts List

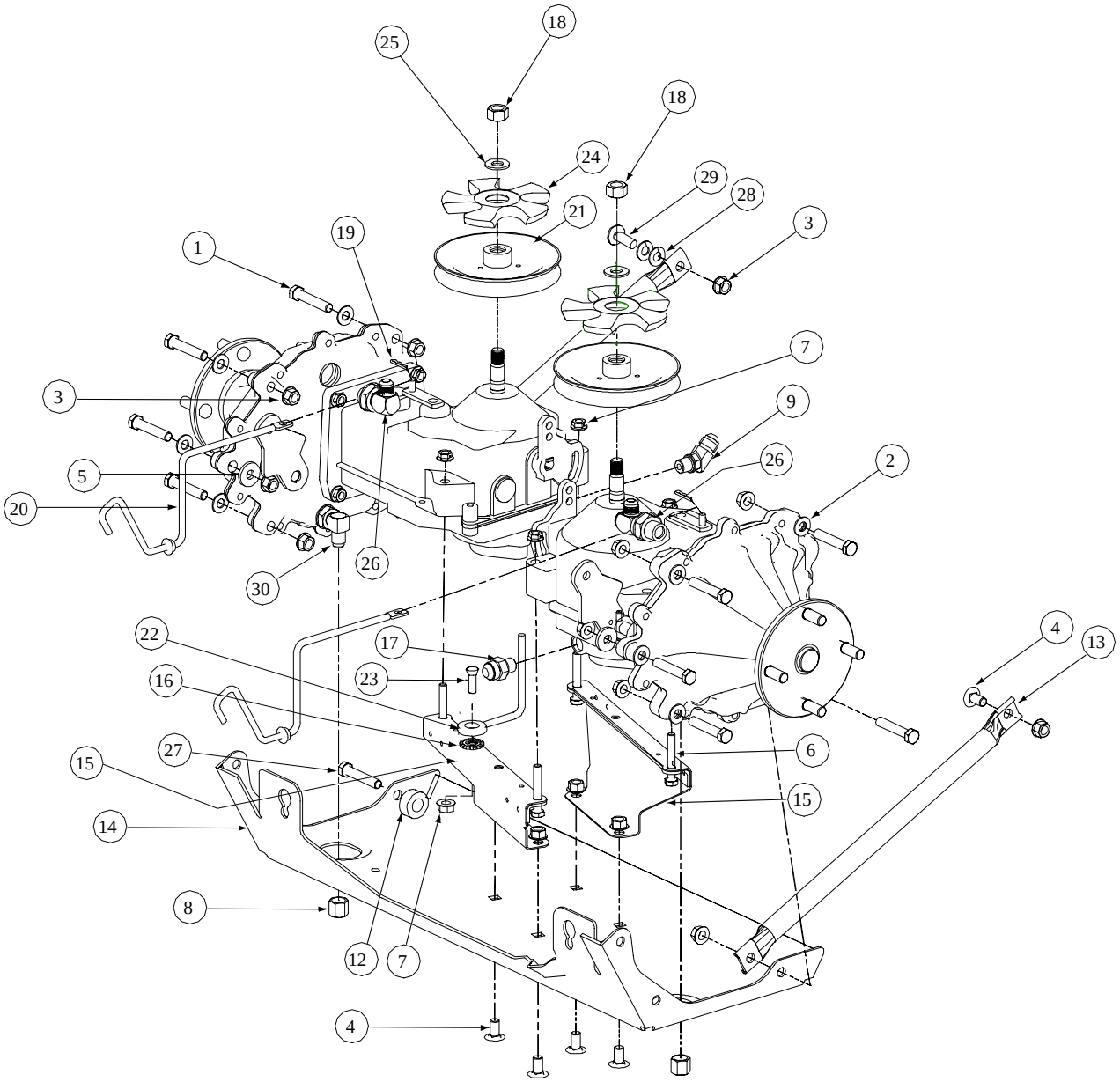

Ref. No.	Part No.	Description	Qty.	Ref. No.	Part No.	Description	Qty.
1	00002528	HHCS, 3/8-16, 2.00	9	16	01005851	External Tooth Washer	1
2	00012158	Flat Washer, 3/8, SAE	10	17	01002606	Fitting Connector, 1/2 x 3/8	1
3	00022560	Hex Nut, 3/8-16, Flange Lock	16	18	01005191	Nut, 1/2-20, Hex Insert Lock Jam	2
4	01000372	Carriage Bolt, 3/8-16 x .75 Long	5	19	01002771	Hair Pin, .0721 x 1.12 Long	2
5	01000390	Flat Washer, .385 x 1.0 OD x .13	2	20	01003268	Rod, Release, Pump	2
6	00013198	HHCS, 5/16-18, 2.00	4	21	01003732	Pulley, Transmission Hydro, Slotted	2
7	01000635	Lock Nut, Hex Flange, 5/16-18	5	22	01005114	Guide, Traction Drive Belt	1
8	01001623	Nut, Cap, 3/8	2	23	01005852	Flat Head Screw, 5/16-18 x 1.00	1
9	01001975	Elbow Fitting, 3/8-1/2, 45 degree	1	24	01005339	Hydro Pulley Fan	2
10	--	--	--	25	00011459	1/2" Flat Washer	2
11	--	--	--	26	01004542	Fitting Elbow, 1/2 x 3/8	2
12	01000397	Spacer, .406 ID x 1.00 OD x .38	1	27	00011861	Hex Cap Screw, 3/8-16, 2.50	1
13	01001618	Strut, Frame	2	28	00012157	Lock Washer, 3/8	2
14	01001620	Plate Assembly, Skid	1	29	01000643	Carriage Bolt, 3/8-16 x 1	1
15	01006165	Bracket Assembly, Support Pump	2	30	01002602	Fitting Elbow, 3/8 x 3/8	2

Seat Assembly- Figure 15 and Parts List

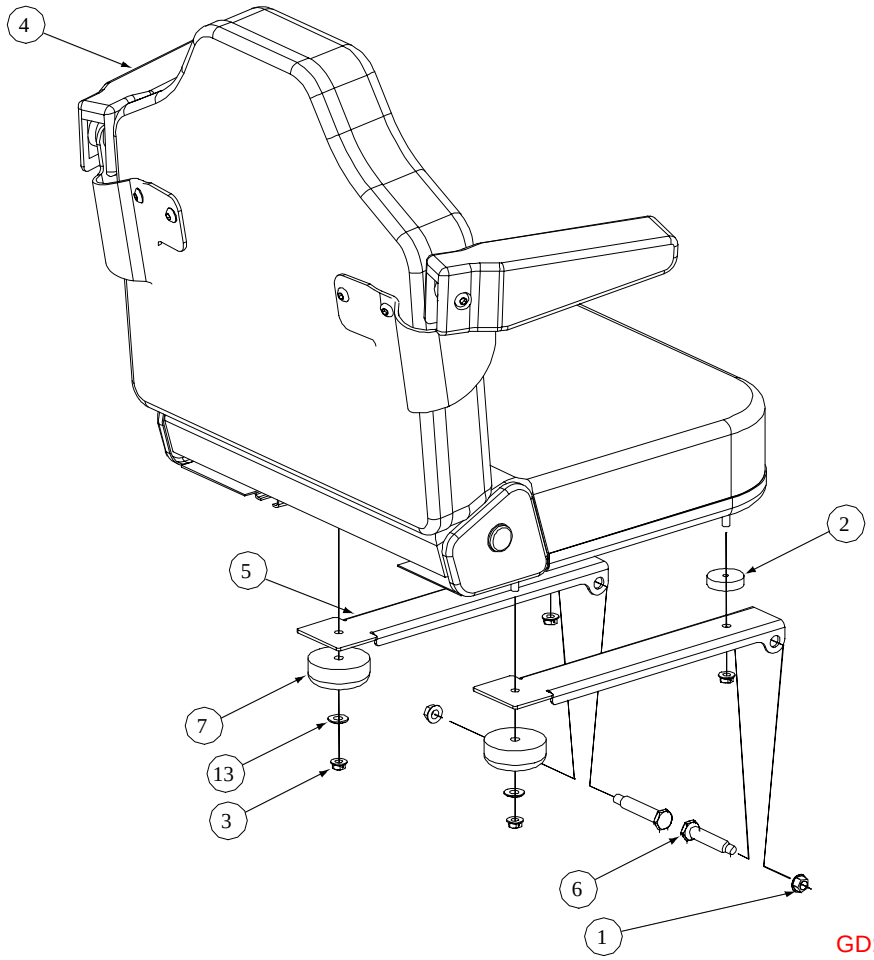

GD: 01005780-P04

Ref. No.	Part No.	Description	Qty.
1	00022560	Nut, Hex 3/8-16 Flange Lock	2
2	01000937	Spacer, 0.345 ID x 1.50 OD x .41	2
3	01000635	Lock Nut, Hex Flange, 5/16-18	4
4	01006764	Adjustable Seat, Black embossed	1
5	01001630	Mounting Bracket, Seat	2
6	01002634	Shoulder Screw, .50x2.345, 3/8-16	2
7	01002753	Grommet, 2.5 OD x 1.0 Long	2
8	--	--	--
9	--	--	--
10	--	--	--
11	--	--	--
12	--	--	--
13	01000723	Washer	2

19HP/23HP Kawasaki Engine Assembly - Figure 16

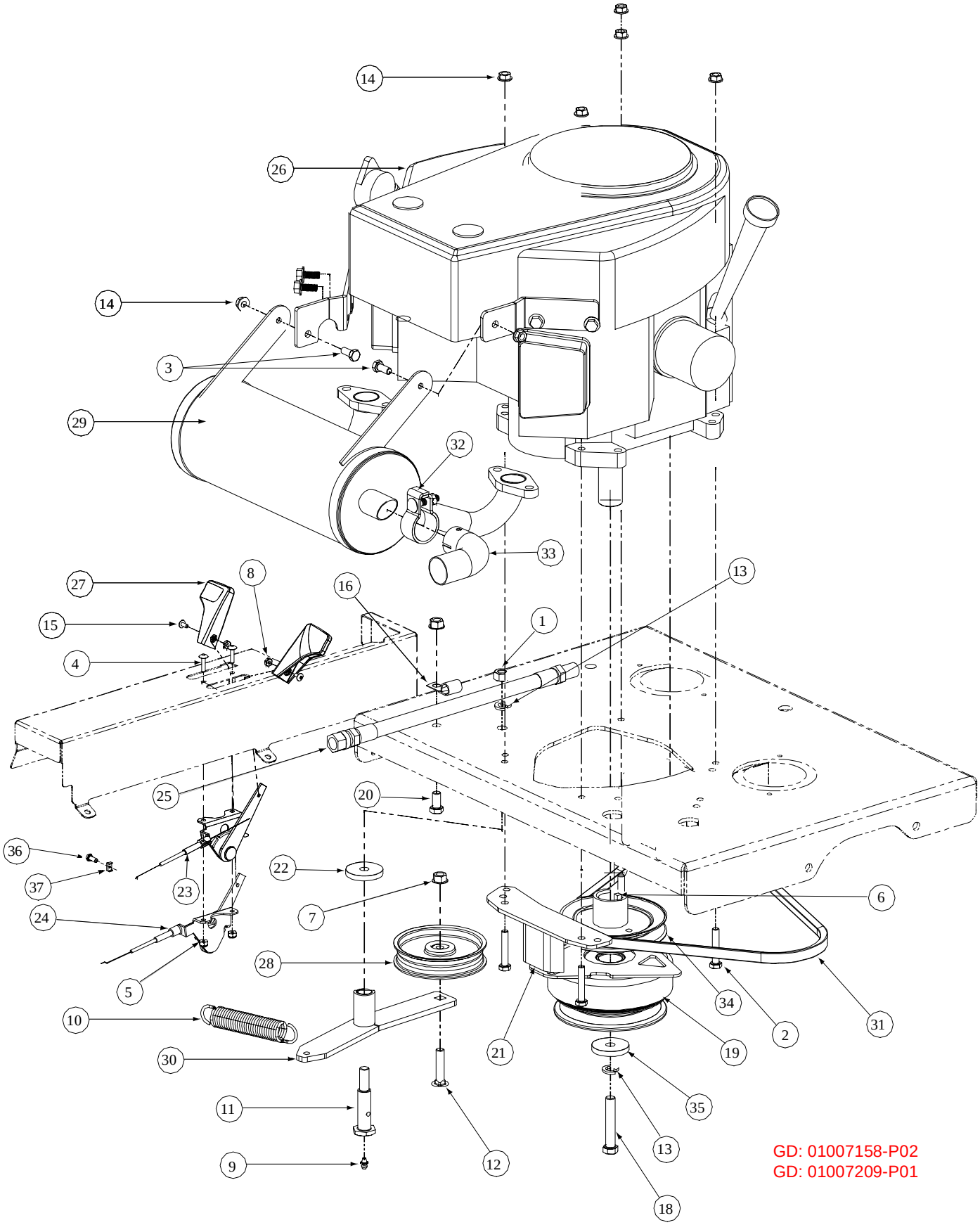

GD: 01007158-P02
GD: 01007209-P01

19HP/23HP Kawasaki Engine Assembly - Parts List for Figure 16

Ref No	Part No.	Description	Qty.
1	00005763	Hex Nut, 7/16-14	1
2	00006129	HHCS, 5/16-18, 1-3/4	4
3	00013406	Hex Cap Screw, 5/16-18 x 3/4	2
4	00014602	Round Hd. Machine Screw, 10-32 x 3/4	2
5	00014608	Lock Nut, Nylon Insert, 10-32	2
6	01005856	Key, 1/4 x 1/4 x 3	1
7	00022560	Flange Lock, Hex Nut, 3/8-16	2
8	00060056	Nut Washer, W/Star, 8-32	2
9	00060078	Grease Fitting, 1/4-28 x 3/16	1
10	01000199	Extension Spring, 1.0 OD x 5.125	1
11	01000302	Shoulder Screw, 7/16-14	1
12	01000364	Hex Carriage Screw, 3/8-16, 1.75	1
13	01000389	Lock Washer, 7/16	2
14	01000635	Hexflange Lock Nut, 5/16-18	7
15	01000721	Machine Screw, 8-32, .375	2
16	01000728	Clip, Heat Shield Cable	1
17	01000981	Hex Cap Screw, M*-1.25 x 20mm	1
18	01001395	Capscrew, 7/16-20 x 2.50	1
19	01001979	Clutch Brake, 1.125 ID	1
20	01002601	Hex Cap Screw, 3/8-16, .750	1
21	01006456	Retainer Clutch Assembly, Ogura	1
22	01003269	Flat Washer, 7/16 ID x 1.75 OD x .25	1
23	01003271	Choke, Control Cable, 43.0	1
24	01003272	Throttle, Control Cable, 39.0	1
25	01003283	Oil Drain Hose	1
26	01003613	19HP Twin Engine, Kawasaki	1
	01003615	23HP Kawasaki Engine	1
27	01004004	Control Throttle Knob	2
28	01004081	Flat Pulley with Flanges	1
29	01004991	Muffler Accessory, Kawasaki	1
30	01005006	Engine Idler Arm Assembly includes:	1
	01000308	Bearing	2
31	01005010	V Belt, A Section x .47.3	1
	00023887	Belt: For New Sub-Frame	1
32	01005084	Tube Clamp, 1.375	1
33	01005085	Muffler Accessory Exhaust Tube	1
34	01005104	Pump Drive Pulley	1
35	01005314	Flat Washer, 7/16 ID x 1.75 OD x .25	1
36	01006812	Bolt, M5 x 18	1
37	01006813	Choke Cable Clamp	1

Note: Engine Oil 10w40

19HP/23HP Electrical Assembly Kawasaki - Figure 17

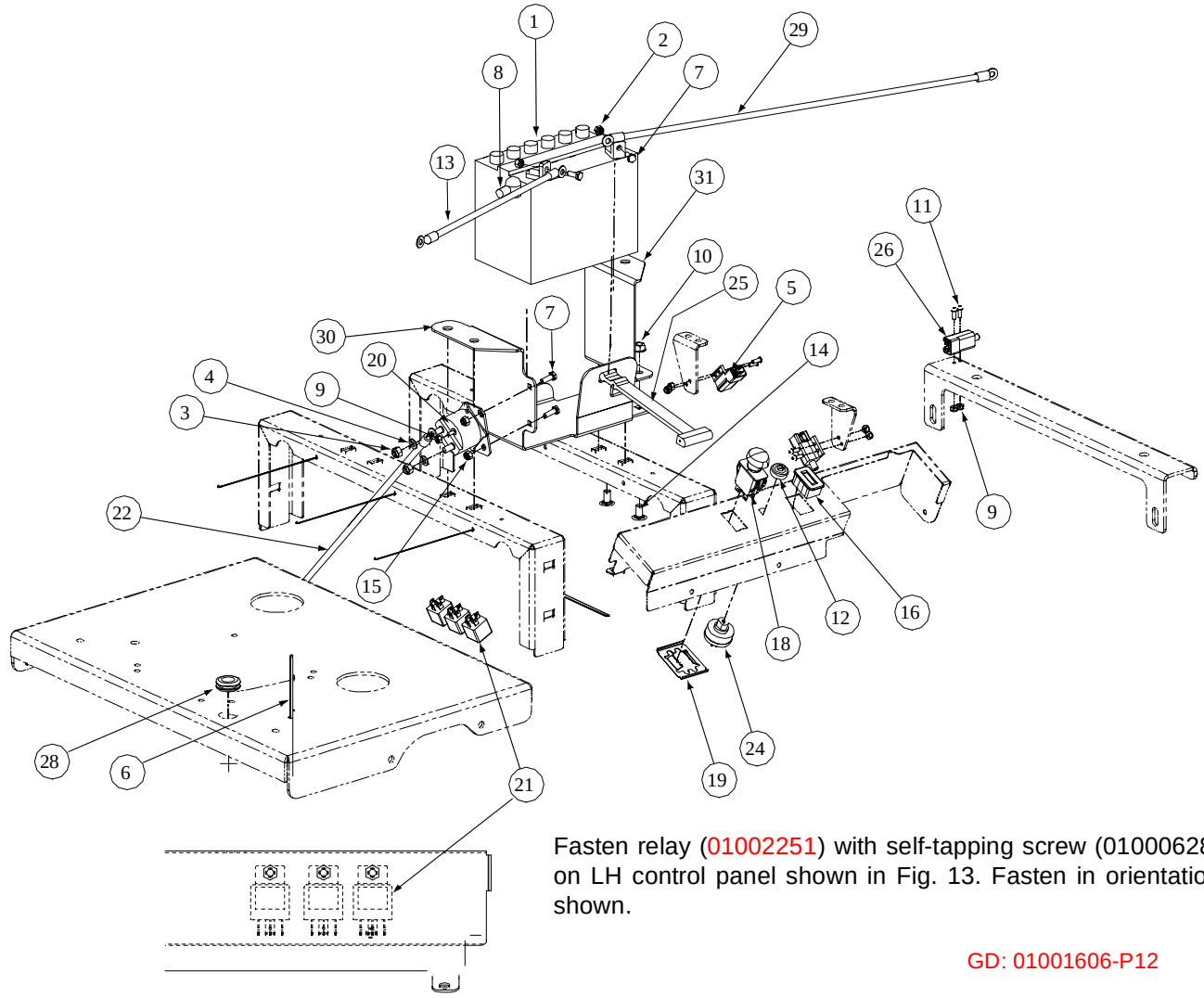

Fasten relay (01002251) with self-tapping screw (01000628) on LH control panel shown in Fig. 13. Fasten in orientation shown.

GD: 01001606-P12

19HP/23HP Electrical Assembly Kawasaki - Parts List for Figure 17

Ref. No.	Part No.	Description	Qty.
1	00012032	Battery, 12V 225CCA 30 Min	1
2	01002766	Hex Flange Lock Nut, 1/4-20	3
3	00012165	Nylock Nut, 5/16-18	2
4	00012168	Lock Washer, 5/16	2
5	00012242	Switch, Safety N.O.\N.C.	2
6	00012470	Tie, Cable, 3/16 x .05 x 7.4"	5
7	00013131	Screw, Hex, Cap, 1/4-20 x .75	4
8	00013258	Boot, 1" OD Rubber Battery-PST, Red	1
9	00014608	Nut, Lock, Nylon Insert, #10-32	7
10	00022560	Nut, Hex, Flange Lock, 3/8-16	2
11	00030906	Screw, Phillips Head, Machine, 10-32 x 5/8	6
12	00032097	Nut, W/Cap, 5/8-32 Ignition	1
13	00095773	Cable, Battery, Red, 15"	1
14	01000372	Carriage Bolt, 3/8-16 x .75 LG.	2
15	00012152	Lock Nut w/Nylon Insert	2
16	01005389	Meter, Hour	1
17	01001811	Hourmeter, Harness (not shown)	1
18	01002111	Switch, Electric, PTO	1
19	01002160	Bracket, PTO Switch Retainer	1
20	01002228	Solenoid Magnetic Switch	1
21	01002251	Relay, 12V 40A	3
22	01005406	Cable, Battery Red, 32"	1
23	--	--	--
24	01003581	Switch, Ignition, 6 Pin	1
25	01003649	Strap, Battery	1
26	01003712	Switch, Plunger N.O.\N.O.	1
27	01006804	Harness Assembly (not shown)	1
28	01004040	Grommet, .75 ID	1
29	01004078	Cable, Battery Black, 24"	1
30	01004514	Mount Bracket, Battery	1
31	01004559	Mount Bracket, Battery	1

Lift Assembly - Figure 18

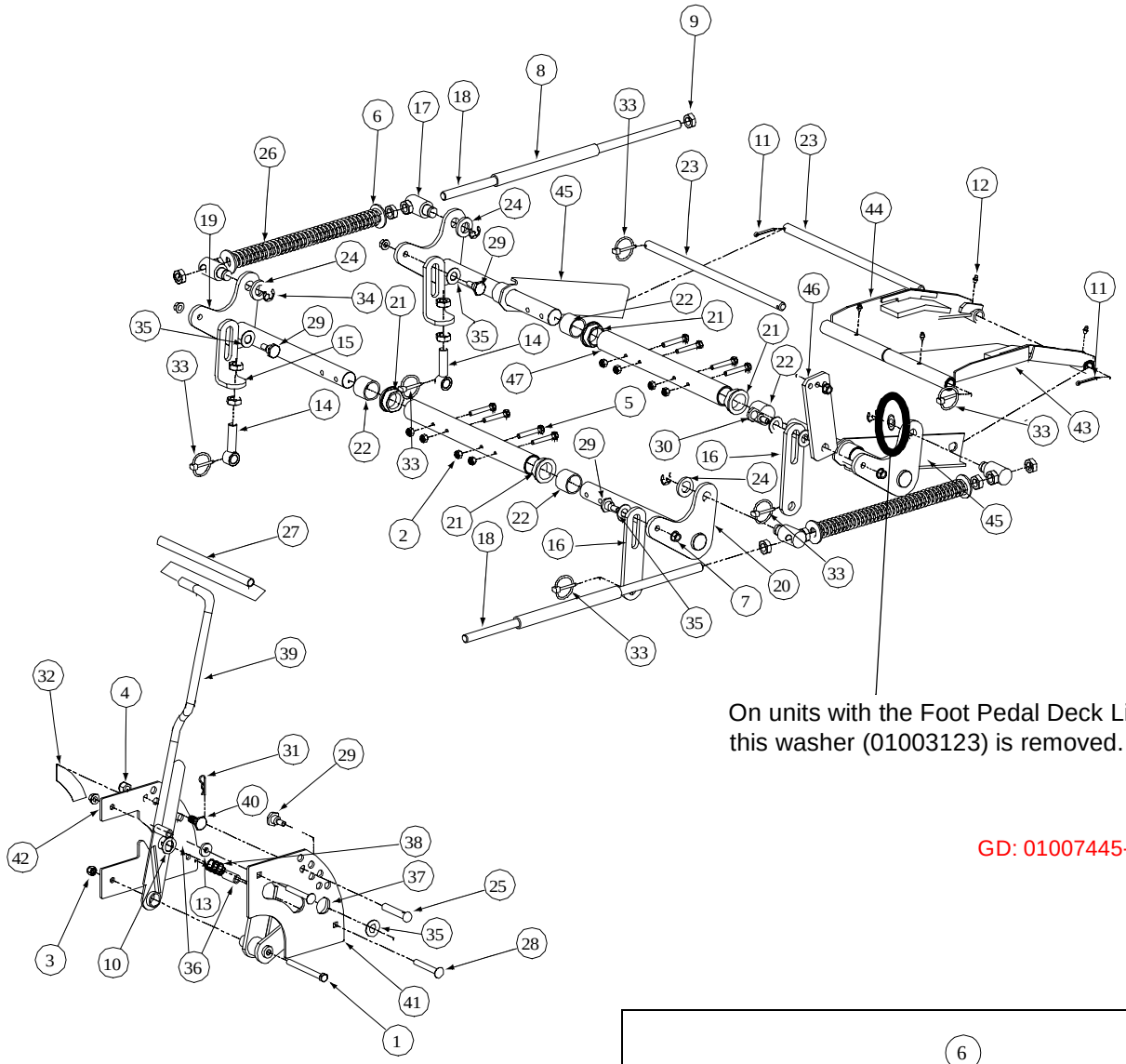

On units with the Foot Pedal Deck Lift this washer (01003123) is removed.

GD: 01007445-P00

OPTIONAL AND STANDARD FOOT PEDAL DECK LIFT

Ref. No.	Part No.	Description	Qty.
1	00012152	Lock Nut, Nylon Insert, 1/4-20	4
2	00012577	Washer, 1/2 x 1 Shim	1
3	01006786	Detent Pin, w/12" Lanyard	1
4	00013131	Hex Cap Screw, 1/4-20, .75	2
5	--	--	--
6	00022560	Hex Nut, Flange Lock 3/8-16	1
7	01000944	Hex Cap Screw, 1/4-20, 1.00	2
8	01004118	Shoulder Screw, .50x.27 Lg., 3/8-16	1
9	01006409	Foot Lift Backup Pedal	1
10	01006352	Deck Foot Pedal Lift	1
11	01006411	Deck Foot Pedal Lift Holder	1
12	01006418	Deck Foot Lift Pad	1
13	00062715	Turnbuckle Sleeve	2

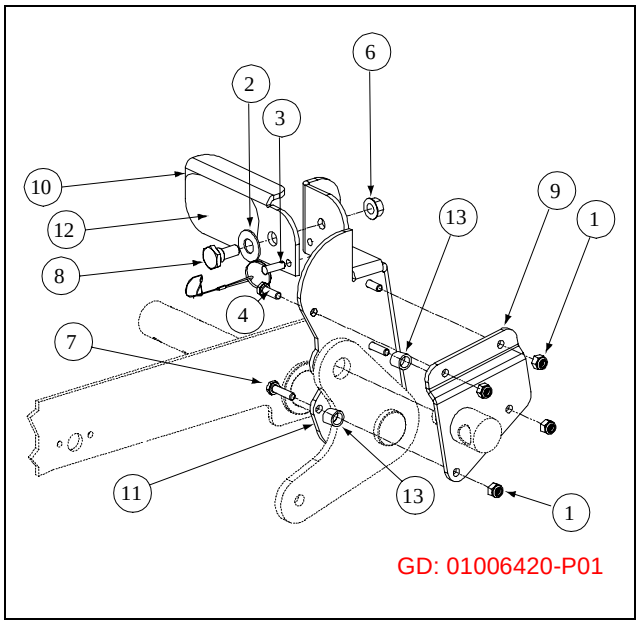

GD: 01006420-P01

Lift Assembly - Parts List for Figure 18

Ref. No.	Part No.	Description	Qty.
1	00011925	Hex Cap Screw, 3/8-16, 3.75	1
2	00012165	Nut, 5/16-18, Nylock	8
3	00012173	Nylock Insert Lock Nut, 3/8-16	1
4	00012428	Nylock Insert Lock Nut, 1/2-13	1
5	00013198	Hex Cap Screw, 5/16-18 x 2	8
6	00013432	Flat Washer, 5/8	4
7	00022560	Hex Nut, Flange Lock, 3/8-16	7
8	01006823	Hose, 5/8 ID 13/16 OD, 8" LG	2
9	00035632	Jam Nut, 5/8-11	14
10	00060017	Flat Washer, .06, .776, 1.25	1
11	00060018	Cotter Pin, 3/16 x 1-1	2
12	00060078	Grease Fitting, 1/4-28 x 3/16	4
13	00083192	Idler Washer	1
14	01001744	Eye Bolt, 5/8ID	2
15	01004917	Eye Bolt Mount Link, 5/8 ID	2
16	01004918	Deck Link	2
17	01001855	Ferule Lift	4
18	01001857	Lift Connector Rod	2
19	01004920	Bellecrank Weldment Lift, Left Hand	2
20	01004921	Bellecrank Weldment Lift, Right Hand	1
21	01001930	Hex Flange Bearing, 1.25 ID	4
22	01001973	Frame Lift Spacer	4
23	01002586	Front Lift Link, Rod Mount	2
24	01003123	Spacer, .812 ID x .268 Lg.	4
25	01003284	Clevis Pin, .500 Dia. x 2.625 Lg.	1
26	01003318	Lift Compression Spring	2
27	01007561	Lift Handle Grip	1
28	01003534	Carriage Bolt, 3/8-16, 2.75	2
29	01003535	Shoulder Screw, 0.625 OD x .437 Lg.	4
30	01003536	Shoulder Screw, 0.625 OD x .830 Lg.	1
31	01003537	Cotter Pin, .148 x 3.00	1
32	01003859	Decal Height Indicator	1
33	01003993	Linch Pin, 3/16 Dia.	6
34	01003994	E Clip, 3/4 Dia.	4
35	01004003	Nylon Flat Washer, 5/8	6
36	01004080	Spacer, .39 ID x .63 OD x 1.442	2
37	01004924	Lift Pivot Assembly	1
38	01004971	Lift Handle Spring	1
39	01007469	Lift Handle Assembly	1
40	01004984	Shoulder Screw, 5/8 OD x 0.264	1
41	01005767	Outer Lift Index Plate	1
42	01005768	Inner Lift Index Plate	1
43	01005298	Bearing Lift Brace Assembly, Right Hand	1
44	01005301	Bearing Lift Brace Assembly, Left Hand	1
45	01005569	Front Frame Strut Assembly	2
46	01006365	Lift Link Adjustment	1
47	01006363	Lift Shaft Holder	2

Floor Panel Assembly- Figure 19 and Parts List

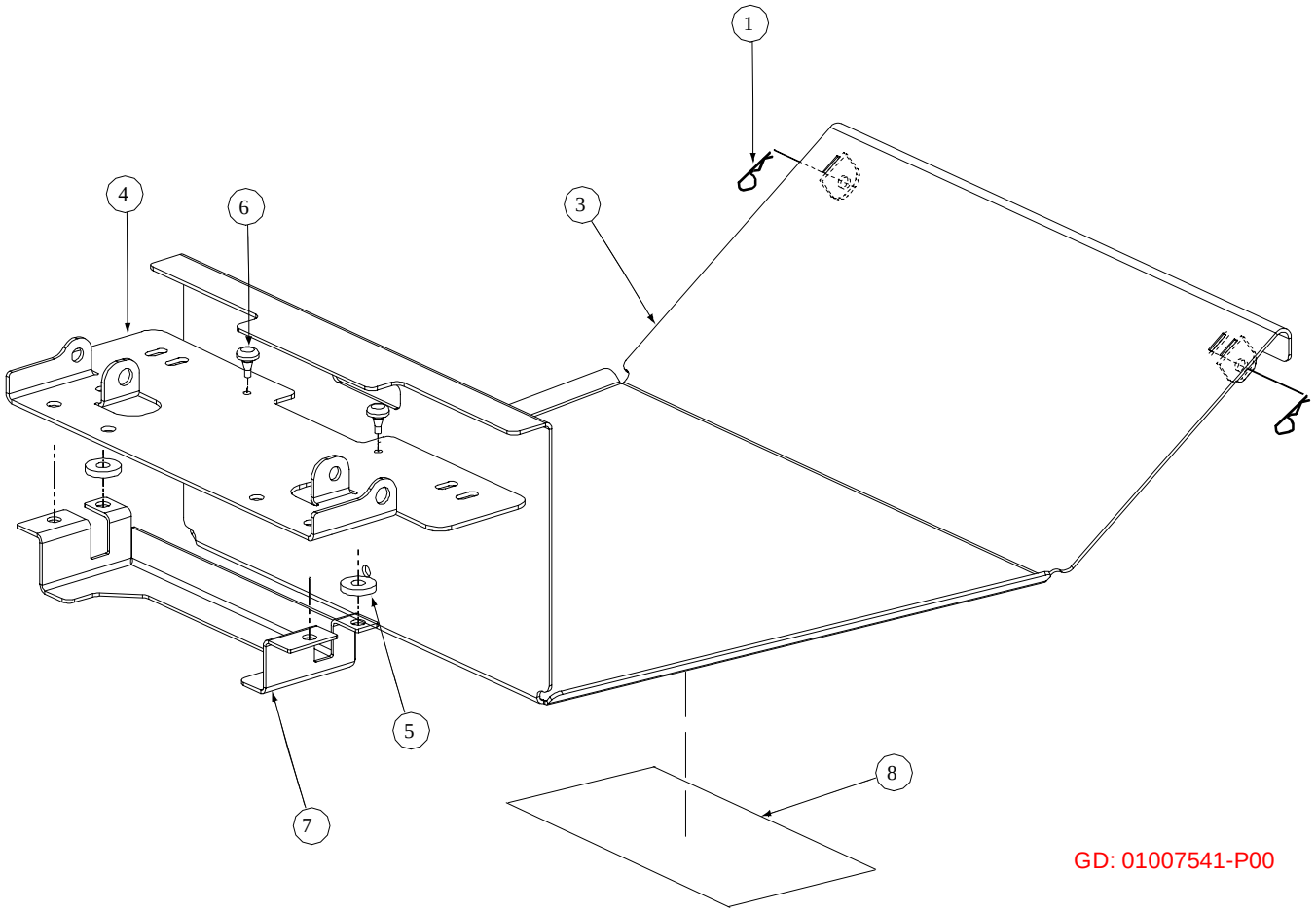

GD: 01007541-P00

Ref. No.	Part No.	Description	Qty.
1	00021956	Hair Pin, 3/8 - 1/2	2
2	--	--	--
3	01007560	Floor Panel Assembly	1
4	01001638	Panel Seat	1
5	00083192	Washer	2
6	01001170	Rubber Bumper, .62 OD x .22 Thick	2
7	01004726	Support, Seat Bracket	1
8	01004992	Label, Belt Routing and Lubrication	1

Assembly Pump Right Hand- Figure 20 and Parts List

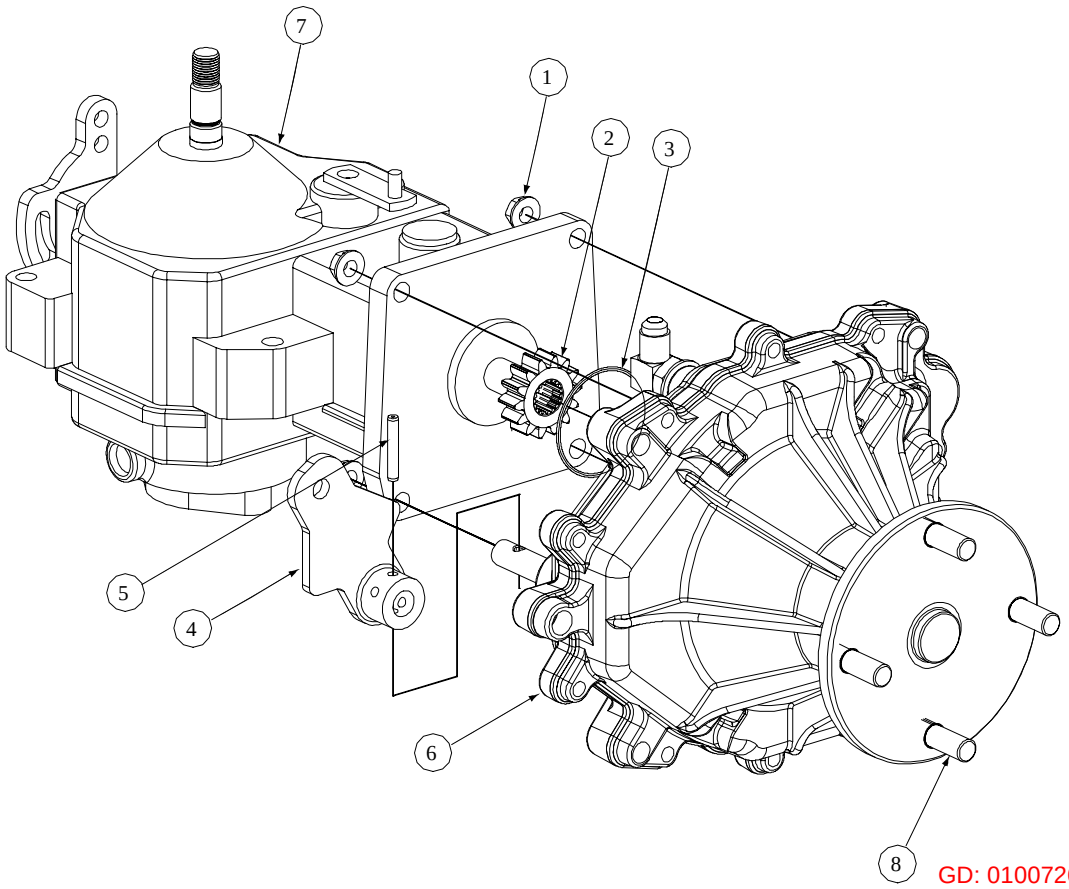

GD: 01007260-P00

Ref. No.	Part No.	Description	Qty.
1	01000635	Hex Flange, Lock Nut, 5/16-18	4
2	01001807	Gear, Spur, 14T	1
3	01001808	O-Ring, 2.00 x .070	1
4	01001809	Lever, Bracket, Park	1
5	01001995	Pin, Spirol, 3/16 x 1.25 HD	1
6	01007264	Transmission Assembly	1
7	01001544	Pump	1
8	01000548	Rib Neck Stud, 1/2-20	4

Assembly Pump Left Hand- Figure 21 and Parts List

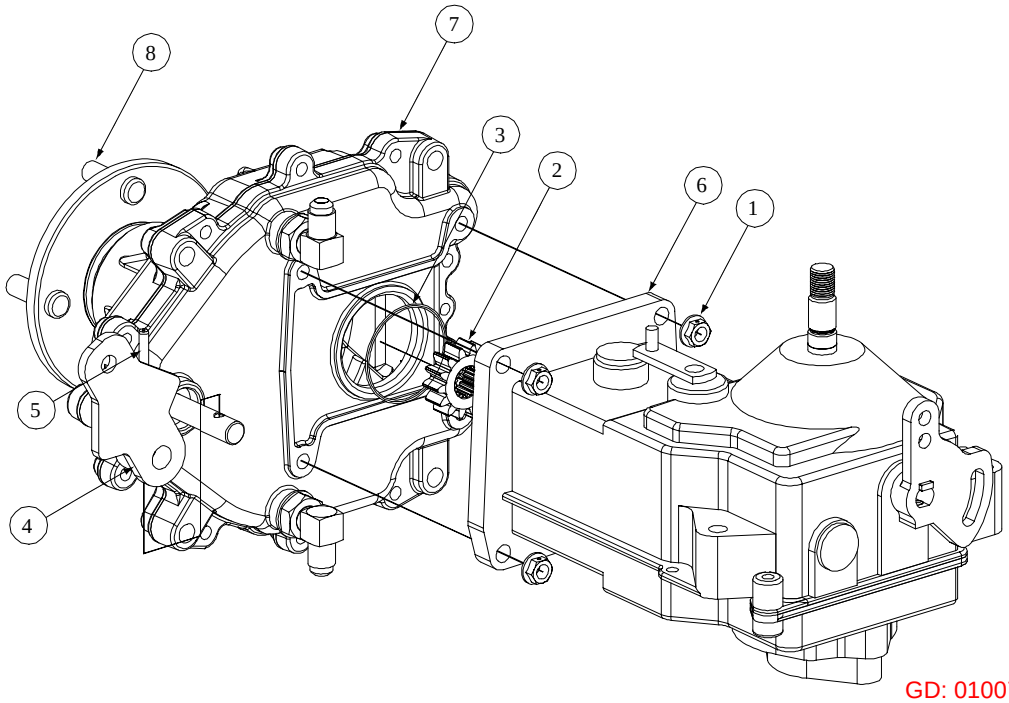

GD: 01007266-P00

Ref. No.	Part No.	Description	Qty.
1	01000635	Lock Nut, Hex Flange 5/16-18	4
2	01001807	Gear, Spur, 14T	1
3	01001808	O-Ring, 2.00 x .070	1
4	01001809	Lever, Brake, Park	1
5	01001995	Pin, Spirol, 3/16 x 1.25 HD	1
6	01001543	Pump, Hydro	1
7	01007264	Transmission Assembly	1
8	01000548	Rib Neck Stud, 1/2-20	4

Notes



Cub Cadet LLC
P.O. Box 31131
Cleveland, OH 44136

Form No. 01005488 Rev. 02-0 2/18/2002