Cub Cadet
COMMERCIAL

Hydrostatic Zero-Turn Riding Mower

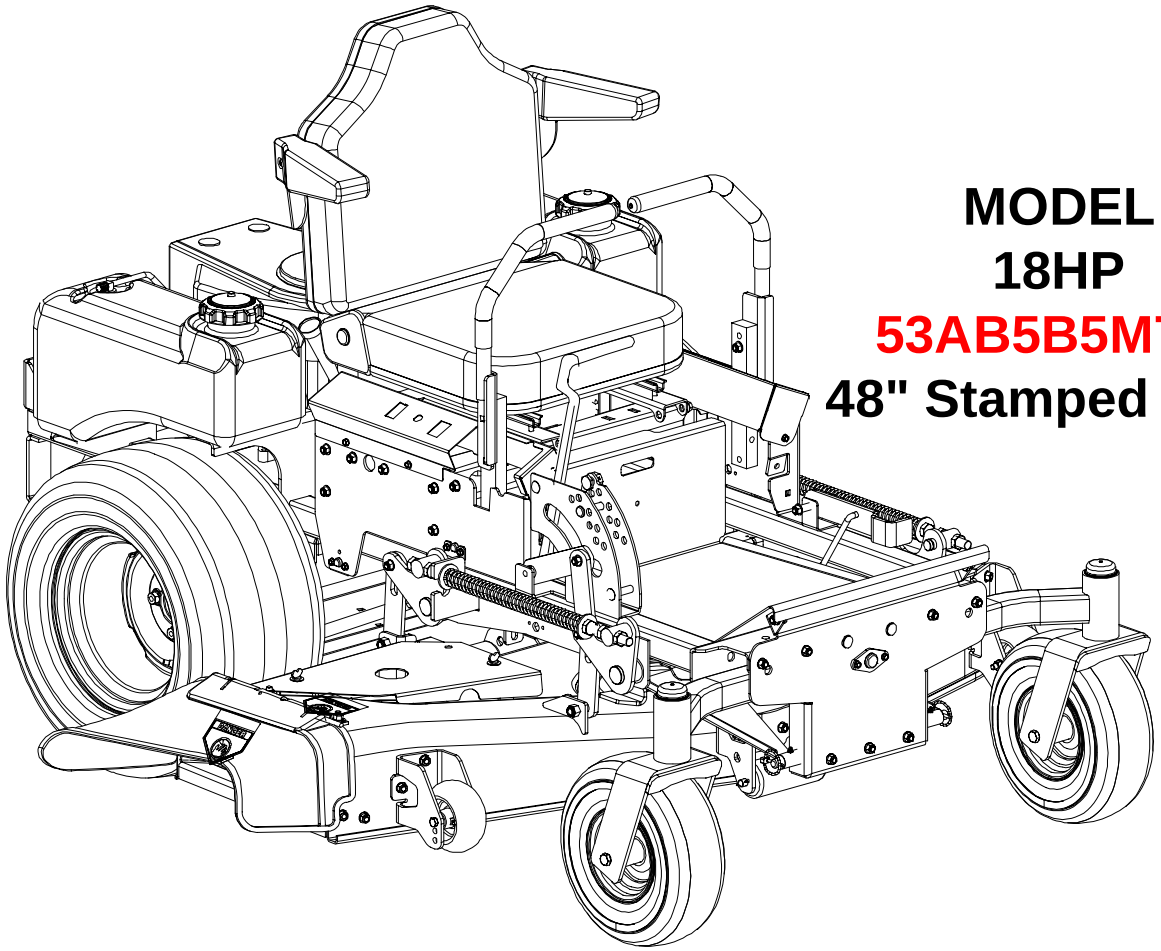

MODEL
18HP
53AB5B5M750
48" Stamped Deck

ILLUSTRATED PARTS LIST

This Page Left Blank Intentionally

TABLE OF CONTENTS

48" Cutter Deck . . . . . 4 and 5
48" Spindle Assembly . . . . . 6 and 7
Hydro Pump Assembly . . . . . 8 and 9
Brake Assembly . . . . . 10 and 11
Fuel Tank Assembly 12
Rear Bumper 13
Wheel Assembly 15
Control Assembly . . . . . 16 and 17
Drive Assembly 18
Seat Assembly 19
18 HP Kohler Engine Assembly . . . . . 20 and 21
18 HP Electrical Engine Assembly 22
Floor Panel Assembly 23
Lift Assembly . . . . . 24 and 25
Assembly Pump Right Hand 26
Assembly Pump Left Hand 27
Frame Assembly 28

48" Stamped Deck - Figure 1

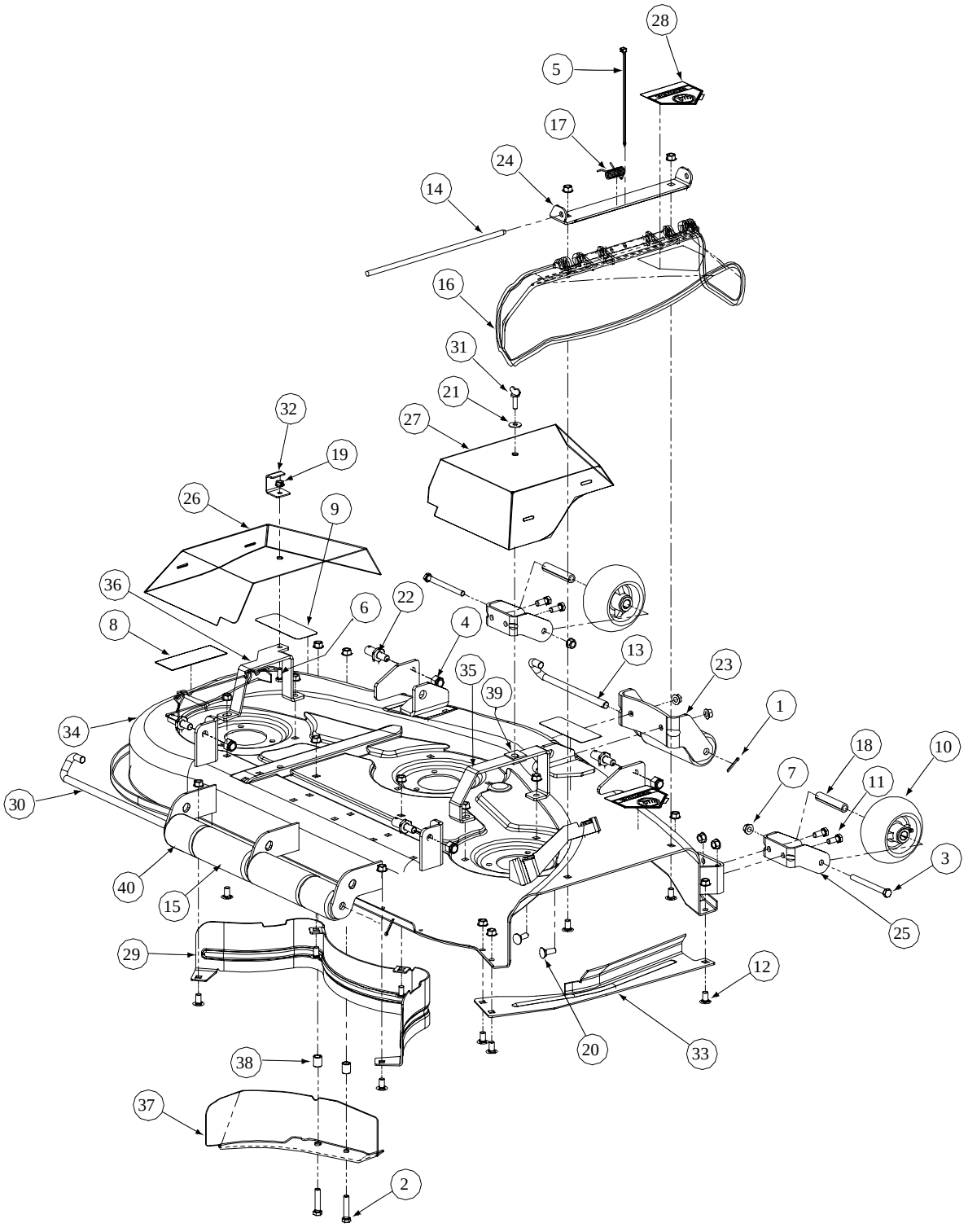

GD: 01007372-P04

48" Stamped Deck - Parts List for Figure 1

Ref. No.	Part No.	Description	Qty.
1	00003107	Cotter Pin, .125 Dia x 1.0	2
2	00008495	Capscrew, 3/8-16 x 1-3/4	2
3	00011925	Hex Cap Screw, 3/8-16, 3.75	2
4	00012428	Lock Nut, Nylon Insert, 1/2-13	4
5	00012470	Cable Tie, 3/16 x .05 x 7.4	1
6	00013406	Hex Cap Screw, 5/16 -18 x 3/4	1
7	00022560	Hex Nut Flange Lock, 3/8-16	23
8	00030633	Decal, Rotating Blade	1
9	00030635	Decal, Warning Shield Missing	2
10	01000343	Wheel, 5.00 Dia	2
11	01000368	Hex Cap Screw, 3/8-16 x .88 Lg	4
12	01000372	Carriage Bolt, 3/8-16 x .75 Lg	9
13	01000375	Roller Pin, 1/2 Dia x 7.31 Lg	1
14	01009102	Hinge Pin, .375 x 14.06	1
15	01000385	Front and Rear Roller	3
16	731-3131A	Deflector Chute	1
17	01000388	Torsion Spring	1
18	01000398	Spacer Wheel	2
19	01000635	Hex Flange Lock Nut, 5/16-18	1
20	01000643	Carriage Bolt, 3/8-16 x 1	2
21	01000960	Belle Washer, .325 x .930 x .045	1
22	01001745	Pin, 5/8 Dia x 1.2 Lg	4
23	01007392	Front Roller Bracket	1
24	01007393	Chute Mounting Bracket	1
25	01007394	Castor Bracket	2
26	01007395	48" Left Hand Belt Cover	1
27	01007396	48" Right Hand Belt Cover	1
28	01002166	Decal, Danger Hands and Feet	2
29	01007397	48" Right Rear Inner Baffle	1
30	01004751	Roller Pin Rod	1
31	01003560	Thumb Screw, 5/16-18 x 1.0 Lg	1
32	01004109	Tension Rod Stop Bracket	1
33	01007398	Finger Guard	1
34	01007399	48" Stamped Deck	1
35	01007354	48" Right Hand Belt Cover Support Bracket	1
36	01007355	48" Left Hand Belt Cover Support Bracket	1
37	01007356	48" Deck Baffle	1
38	01006573	Spacer, .385 ID x .75 OD x .875	2
39	01003563	U-Nut, 5/16-18	1
40	01001169	Short Roller	2

48" Stamped Deck Spindle Assembly - Figure 2

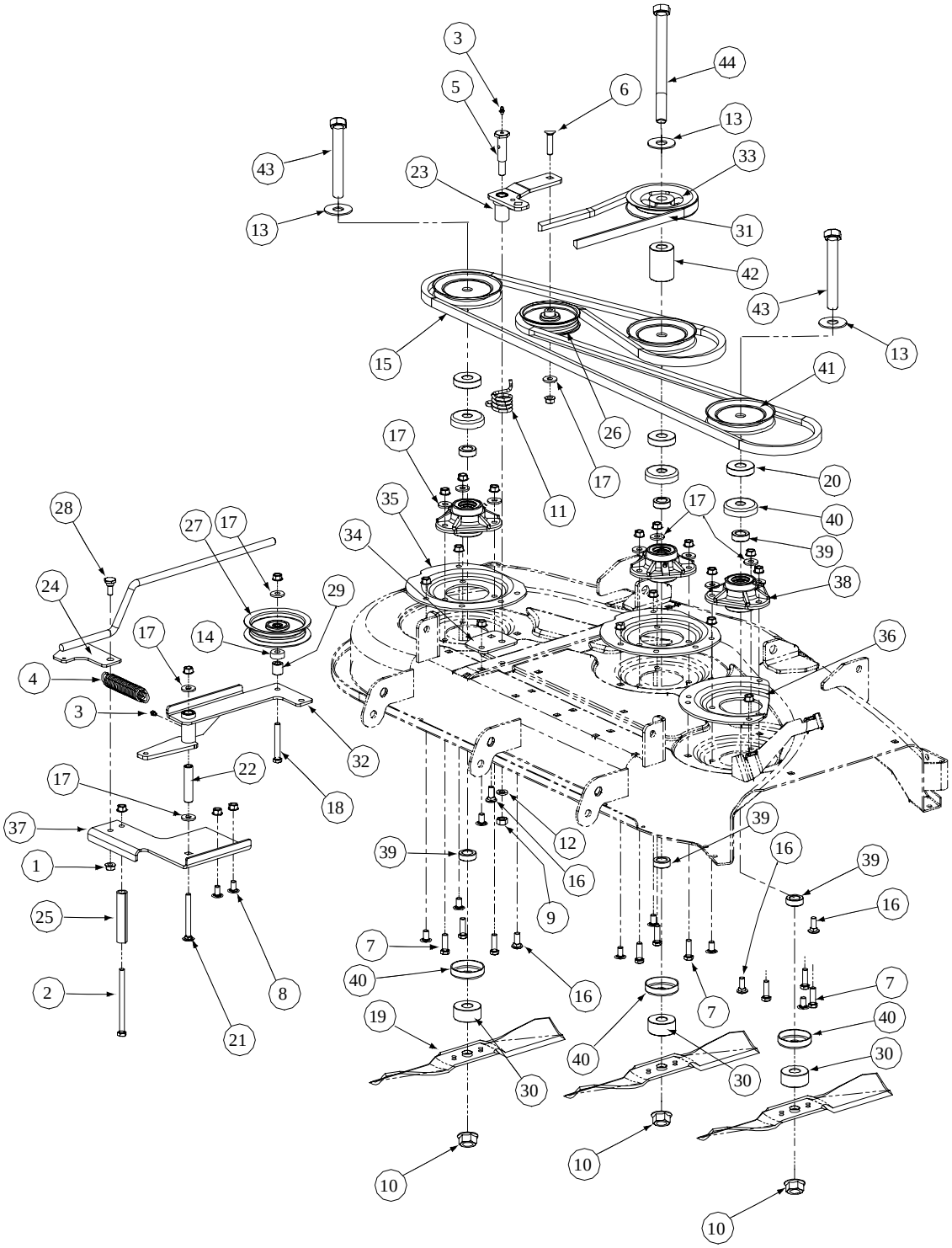

GD: 01007374-P00

48" Stamped Deck Spindle Assembly - Parts List for Figure 2

Ref. No.	Part No.	Description	Qty.
1	00022560	Flange Lock Hex Nut, 3/8-16	24
2	00034167	Hex Capscrew, 3/8-16, 5.00	1
3	00060078	Grease Fitting, 1/4-28 x 3/16	2
4	01000199	Extension Spring, 1.0 OD x 5.00	1
5	01000302	Shoulder Screw, 7/16-14	1
6	01000364	Hex Carriage Screw, 3/8-16, 1.75	1
7	01000369	Hex Cap Screw, 3/8-16, 1.25	9
8	01000372	Carriage Bolt, 3/8-16 x .75 Lg	9
9	01000379	Hex Nut, 7/16-14	1
10	01000380	Flange Hex Nut, 3/4-16	3
11	01000387	Torsion Idler Spring	1
12	01000389	Lock Washer, 7/16	1
13	01000392	Flat Washer, .781 ID, 2.00 OD. 105	3
14	01000397	Spacer, .406 ID x 1.00 OD x .38	1
15	01000399	Belt, A Section x 107.3	1
16	01000643	Carriage Bolt, 3/8-16 x 1	4
17	01000723	Flat Washer, .406 ID, 1.0 OD, .105	13
18	01001371	Hex Capscrew, 3/8-16, 2.75	1
19	01002072	Mower Blade, 16.5 Lg	3
20	01002564	Spacer, .76ID x 2.0OD x .477	3
21	01002750	Carriage Bolt, 3/8-16 x 3.5 Lg	1
22	01003245	Spacer, .39 ID x .625 OD x 2.75	1
23	01007390	Idler Arm Assembly, Bearing	1
24	01005734	Idler Spring Rod Assembly	1
25	01004065	Spacer, .405 x .75 x 3.875	1
26	01004081	Flat Pulley with Flanges	1
27	01004101	Idler Pulley, 4.06 OD with Deep Flange	1
28	01004118	Shoulder Screw, .50 x .27 Lg; 3/8-16	1
29	01004129	Spacer, .385 ID x .75 OD x .875	1
30	01004415	Spacer, .760 ID x 2.000 OD x 0.9	3
31	01005011	Belt, B Section x 83.2	1
32	01005733	Idler Arm Assembly, Flat Top Bearing	1
33	01005201	Cast Pulley, 5.25 OD	1
34	01007376	48" Idler Arm Mounting Plate	1
35	01007377	Disk Reinforcement	2
36	01007378	Disk Reinforcement, Right Hand	1
37	01007379	48" Idler Arm Mounting Bracket	1
38	01006470	Bearing Housing Assembly	3
39	01006533	Spacer, .76ID x 1.25 OD x .44 Lg	6
40	01006534	Spindle Cup	6
41	01006535	Pulley, A Sect x 4.90	3
42	01006584	Spacer, .765 ID x 1.75 OD x 2.42	1
43	01006590	Hex Capscrew, 3/4-16, 5.50	2
44	01006679	Hex Capscrew, 3/4-16, 8.50	1

Hydro Pump Assembly - Figure 3

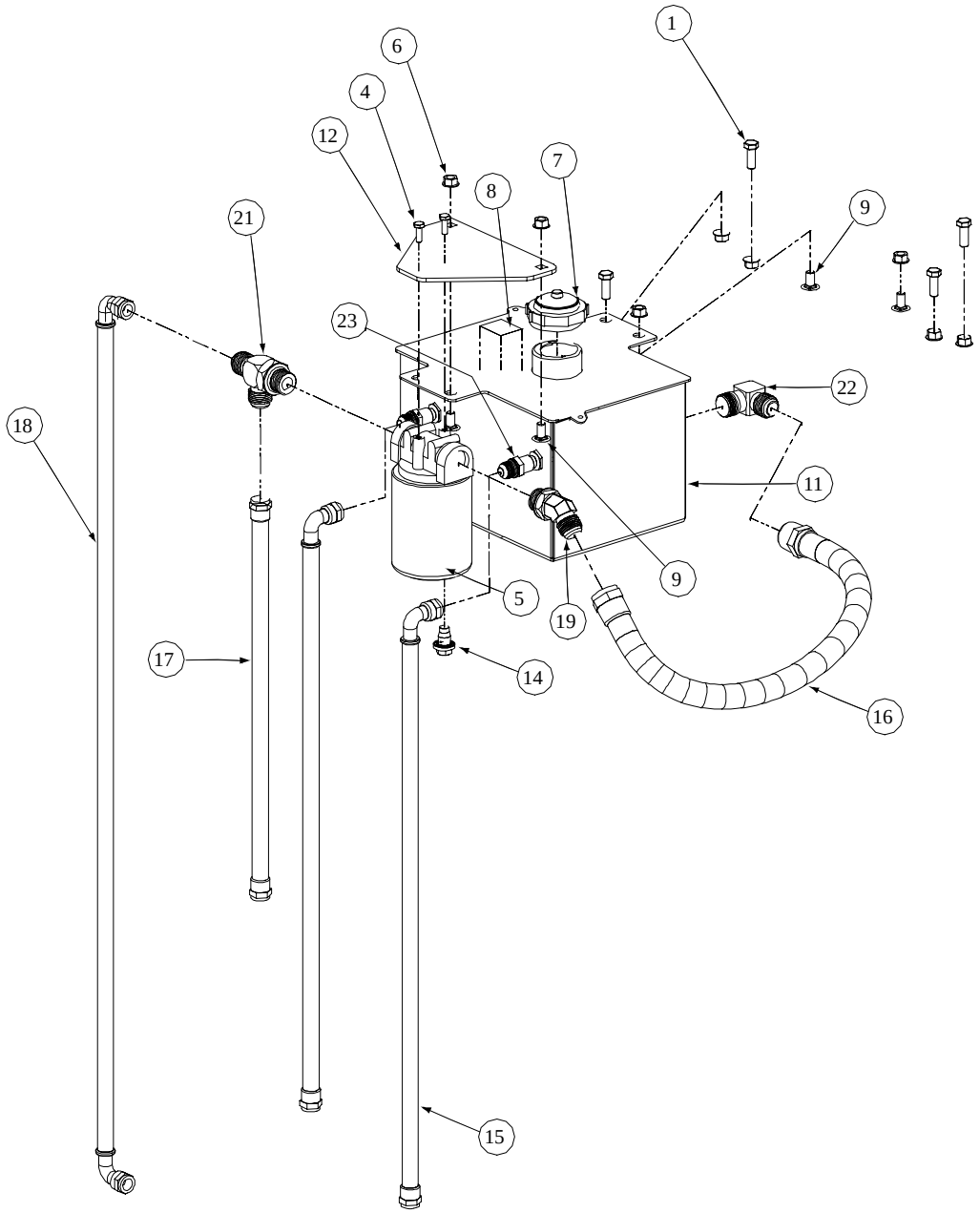

GD: 01004266-P03

Hydro Pump Assembly - Parts List for Figure 3

Ref. No.	Part No.	Description	Qty.
1	00006144	Hex Cap Screw, 3/8-16, 1	4
2	--	--	--
3	00012529	Protective Hose Cover (not shown)	1
4	00013131	Hex Cap Screw, 1/4-20, .75	2
5	00017665	Filter Head 3/4 includes:	1
	01004166	33 Micron Filter	
6	00022560	Hex Nut Flange Lock, 3/8-16	8
7	00030261	Cap, Hydro Oil Tank	1
8	00031994	Decal Oil Only 20W50	1
9	01000372	Carriage Bolt, 3/8-16 x .75 LG.	4
10	--	--	--
11	01004516	Hydraulic Tank Assembly	1
12	01001650	Mounting Plate Oil Filter	1
13	--	--	-
14	01004192	Oil Pan Drain w/ Seal and Plug	1
15	01004267	Gearbox to Tank Hose Assembly	2
16	01004268	Tank to Filter Hose Assembly	1
17	01004269	Filter to Left Hand Pump Hose Assembly	1
18	01004270	Filter to Right Hand Pump Hose Assembly	1
19	01004272	Fitting, 45°	1
20	--	--	--
21	01006959	Fitting Tee, 3/4 x 1/2 x 1/2	1
22	01004702	Fitting Elbow, 1/2 x 1/2	1
23	01006353	Fitting, 3/8 NPT, 1/2 Flare	2

NOTE: Lubricant, SAE 20W50 Gallons, 3.25

Brake Assembly - Figure 4

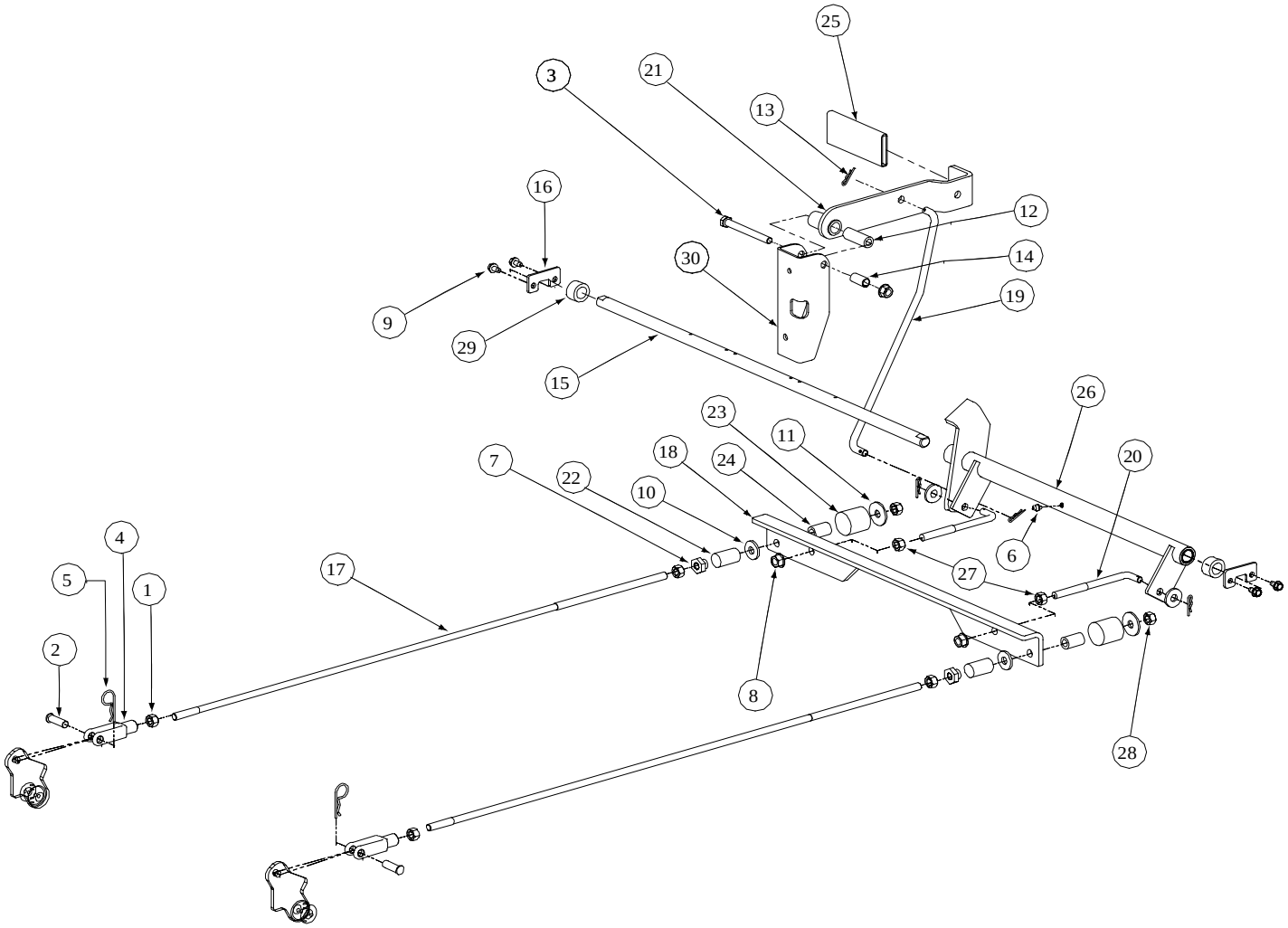

GD: 01001609-P05

Brake Assembly - Parts List for Figure 4

Ref. No.	Part No.	Description	Qty.
1	00006131	Hex Nut, 3/8-16	4
2	00009678	Clevis Pin, 3/8 x 1, 1/8	2
3	00011888	HHCS, Standard, 3/8-16 x 3-1/2	1
4	00021955	Yoke, 3/8-16, Female	2
5	00021956	Hair Pin, 3/8"-1/2"	2
6	00012226	Grease Fitting, 1/4-28, 90°	1
7	01000100	Shoulder Nut	2
8	00022560	Nut, Flange Lock, 3/8-16	3
9	01000628	Screw, TT, 1/4-20 x .5, Hex Index Washer	4
10	01000723	Flat Washer, .406 ID x 1.0 OD x .105	4
11	01000872	Flat Washer, .411 x 1.25 x .100	2
12	01002751	Spacer, .39 ID x .63 OD x 1.75	1
13	01002771	Hair Pin, INT .072 x 1.12 Lg.	4
14	01002772	Spacer, .375 x .50 x 1.02 Lg.	1
15	01002980	Mounting Shaft, Bellcrank	1
16	01003591	Holder Shaft, Park Brake	2
17	01003410	Rod Connector, 3/8 OD x 33	2
18	01003593	Brake Bracket	1
19	01008886	Rod Brake, Connect To Handle	1
20	01003417	Connecting Rod, 3/8 OD x 5.75	2
21	01003595	Weldment, Brake Handle	1
22	01003574	Brake Spring, Neutral	2
23	01003575	Brake Spring, Force	2
24	01003576	Brake Hose, Center	2
25	01003716	Grip, Park Brake	1
26	01003730	Weldment Hub, Brake Bearing Includes:	1
	01004265	Bearings	2
27	01002511	Jam Nut, 3/8-16	2
28	00012173	Lock Nut, Nylon Insert, 3/8-16	2
29	01006350	Shaft collar, .625 ID x 1" OD x .438 Lg	2
30	01008889	Park Brake Mounting Bracket	1

Fuel Tank Assembly - Figure 5 and Parts List

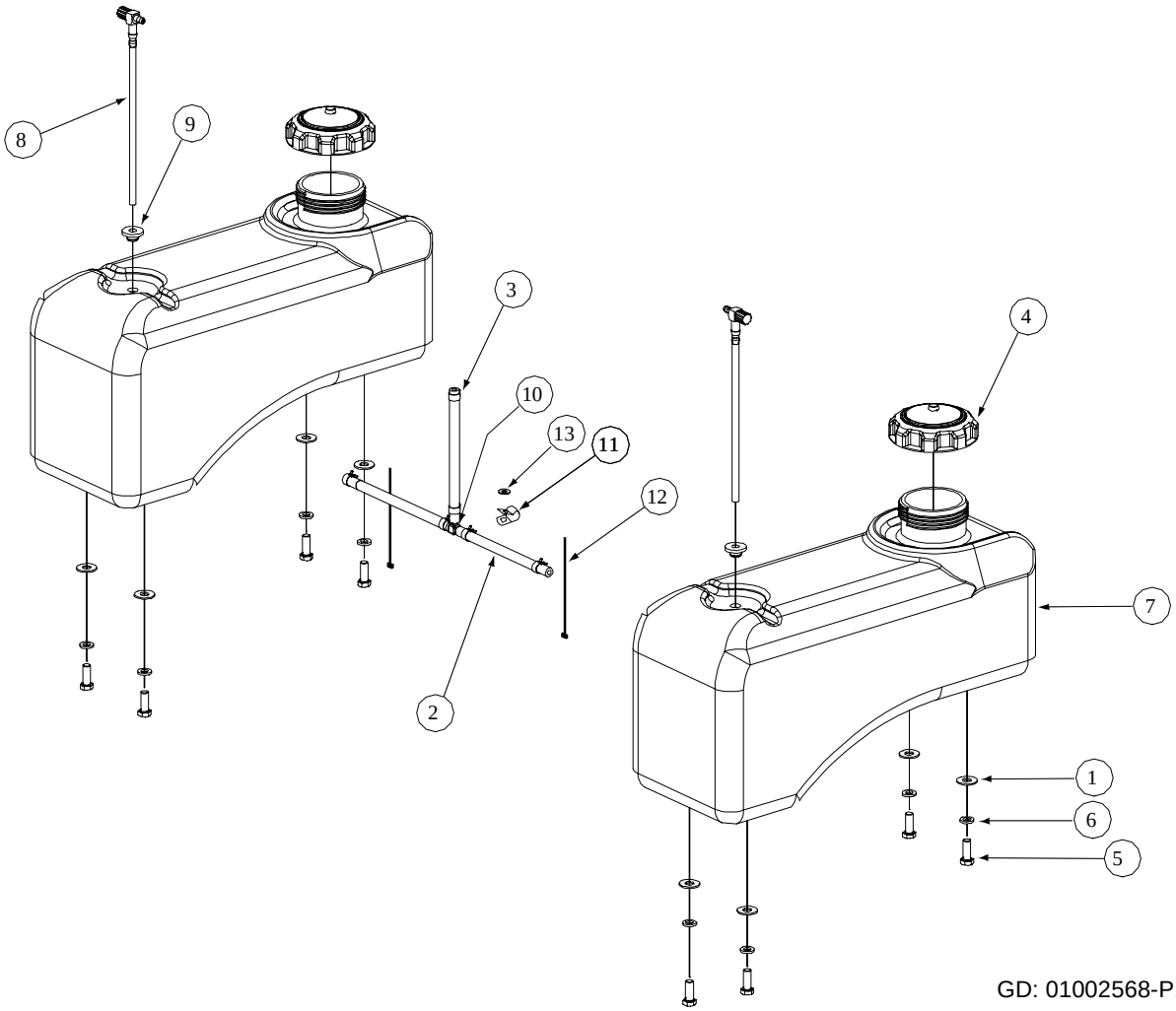

GD: 01002568-P10

Ref. No.	Part No.	Description	Qty.
1	01000723	Flat Washer, .406 ID, 1.0 OD, .105	8
2	--	Hose, 1/4" Fuel Line (in inches)	79.5
3	00012235	Clamp, Union	6
4	01000069	Fuel Cap, 3.5	2
5	01000368	Hex, Cap Screw, 3/8-16, .88	8
6	00012157	Lock Washer, 3/8	8
7	01004350	Fuel Tank	2
8	01003116	Fuel Fitting	2
9	01000281	Grommet, Fuel Tank	2
10	01003473	Tee Fitting, Fuel	1
11	00031081	Clamp, 1/2 Tubing	1
12	00012470	Cable Tie	2
13	01000600	Flat Washer, 1.4 x .630 x .0515	1

Rear Bumper - Figure 6 and Parts List

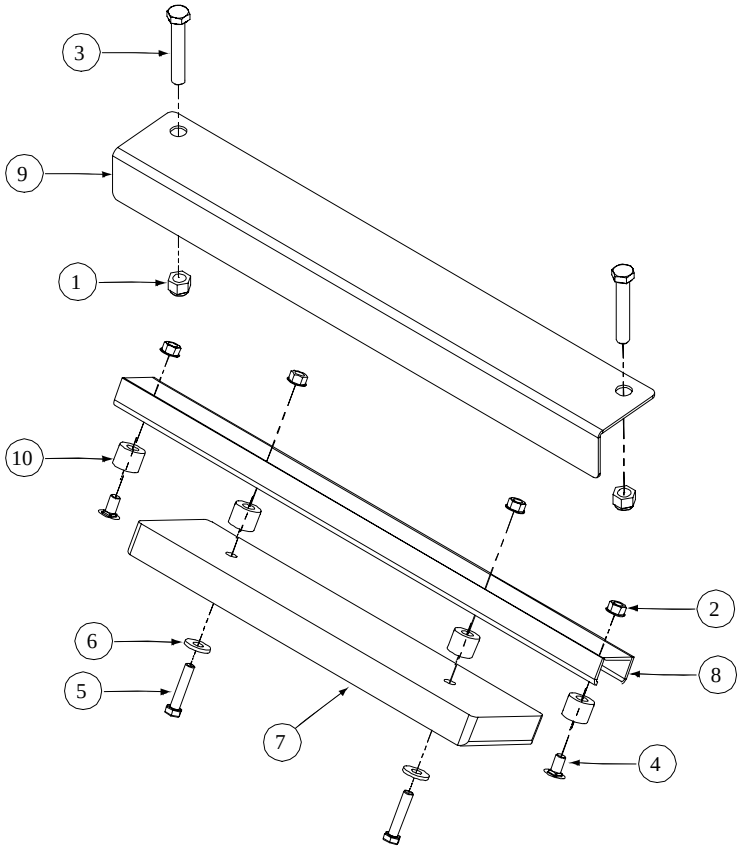

GD: 01007365-P02

Ref. No.	Part No.	Description	Qty.
1	00012428	Hex Nut, 1/2-13, Insert Lock	2
2	00022560	Nut, Hex 3/8-16 Flange Lock	4
3	00030046	HHCS, 1/2-13, 3.00	2
4	01000364	Carriage Bolt, 3/8-16 x 1.75	2
5	01004127	Hex Cap Screw, 3/8-16, 3.00	2
6	01000723	Flat Washer, .406 ID x 1.0 OD x .105	2
7	01003789	Bar Weight	1
8	01003794	Bumper Cross Bar	1
9	01007362	Rear Bumper Bracket	1
10	01000917	Spacer .635 ID x .86 LG	4

Front Caster Assembly - Figure 7 and Parts List

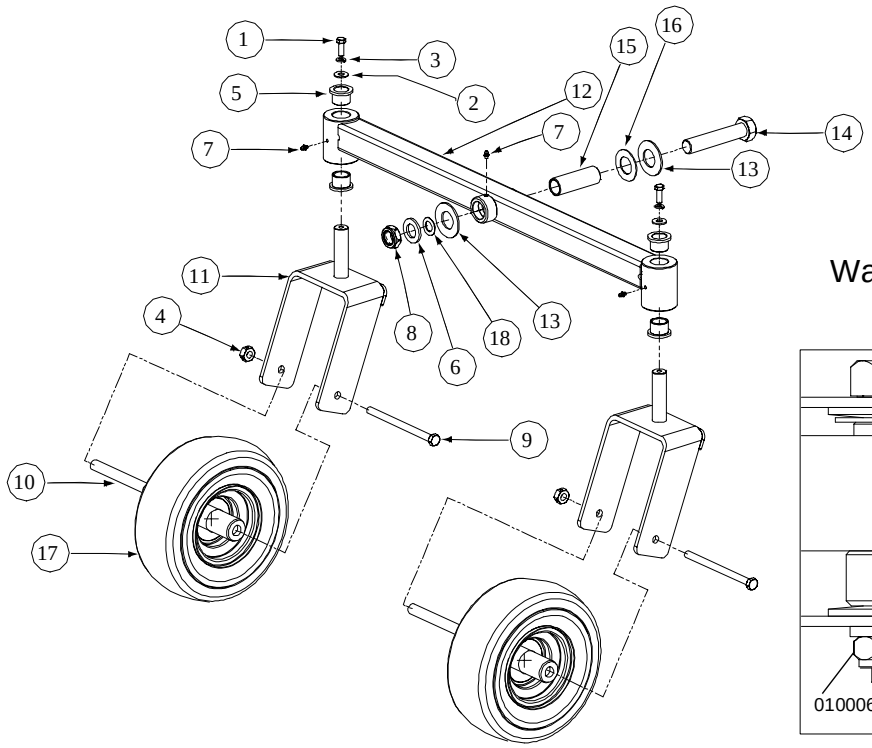

Washer Order and Orientation

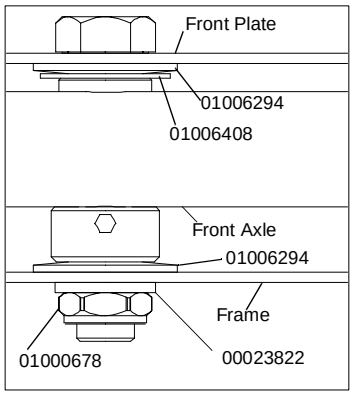

GD: 01007357-P01

Ref. No.	Part No.	Description	Qty.
1	00006144	Hex Cap Screw, 3/8-16, x 1	2
2	01000872	Flat Washer, .411 x 1.25 x 1.00	2
3	00012157	Lock Washer, 3/8	2
4	00023287	Center Lock Nut, 1/2-20	2
5	00023793	Flange Bearing, 1.013	4
6	00023822	Special Washer	1
7	00060078	Grease Fitting, 1/4-28 x 3/16	3
8	01000678	Jam Lock Nut, 1.0-14	1
9	01002611	Hex Cap Screw, 1/2-20 x 7.00	2
10	01004128	Spacer, .51 ID x .75 OD x 5.83 Lg	2
11	01007364	Caster Wheel Bracket Assembly	2
12	01007367	Narrow Front Axle Assembly	1
13	01006294	Belle Washer, 1.25 ID x 2.500 OD x .1	2
14	01006309	Hex Cap Screw, 1-14 x 5.0	1
15	01006310	Spacer, 1.005 ID x 1.25 OD x 3.6	1
16	01006408	Flat Washer, 1.25 ID x 2.25 ODx .075	1
17	01006559	Wheel Assembly, 11 x 4-5.00	2
18	01009997	Retainer Extension, Self Locking	1

Wheel Assembly - Figure 8 and Parts List

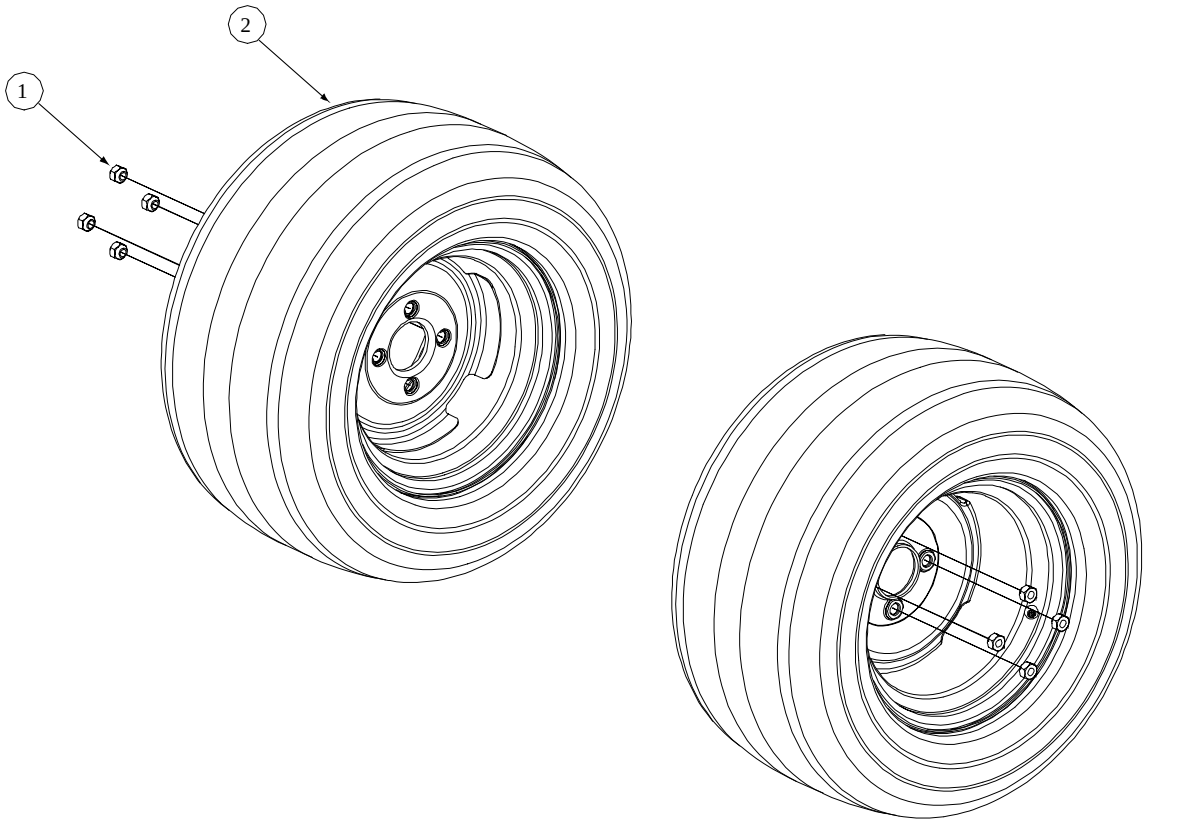

GD: 01006503-P00

Ref. No.	Part No.	Description	Qty.
1	00012187	Lug Nut, 1/2-20	8
2	01006541	Wheel Assembly, 23 x9.5-12, Dr, White: Includes Tire, Turf Saver, 23 x 9.50-12, 2-Ply Rim, 12 Dia x 7.00 width, 4x4 Bolt	2

Control Assembly- Figure 9

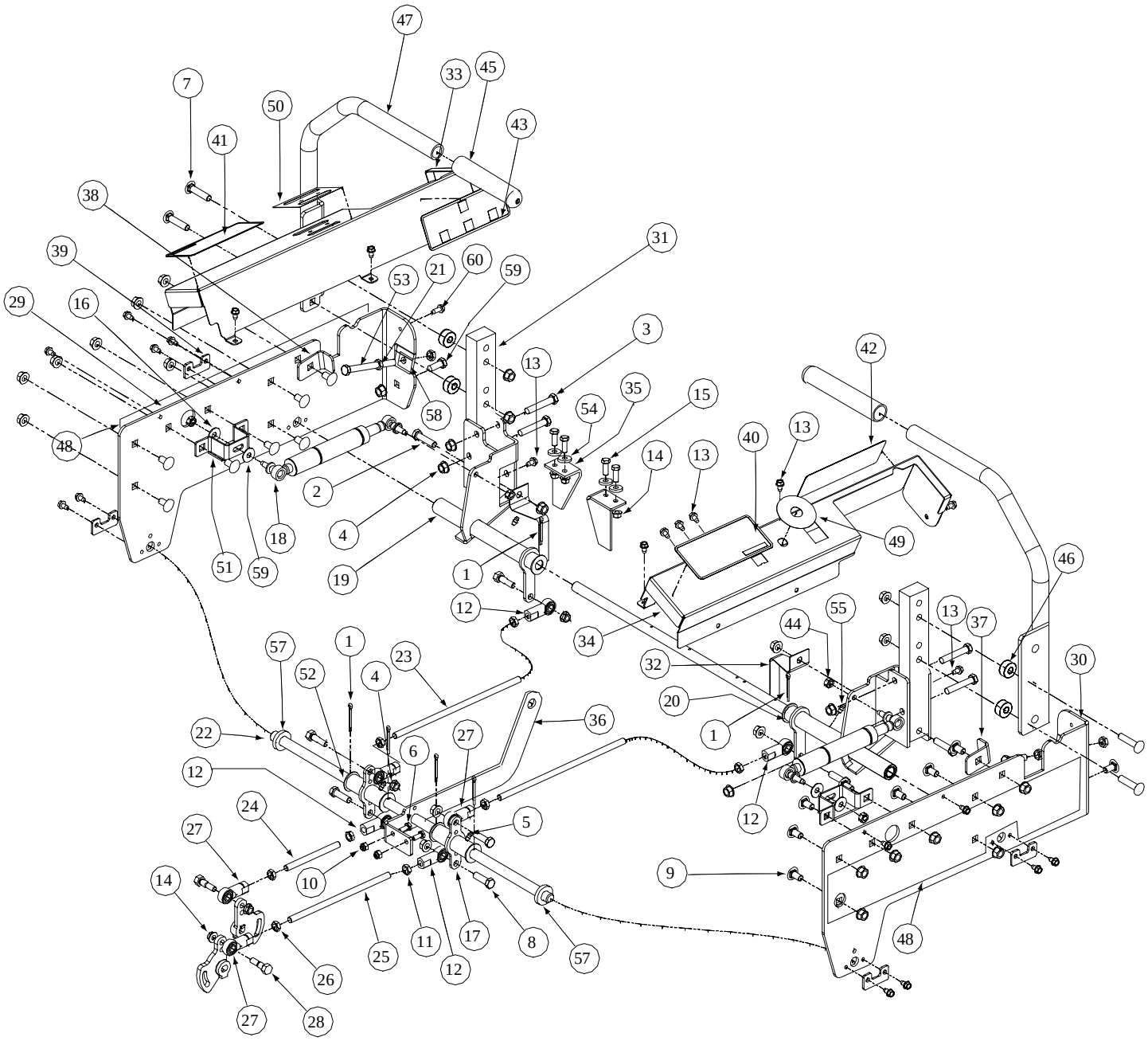

GD: 01007370-P04

Control Assembly - Parts List for Figure 9

Ref. No.	Part No.	Description	Qty.	Ref. No.	Part No.	Description	Qty.
1	00003107	Cotter Pin .125 Dia x 1.0	6	30	01005770	Side Panel, Control, Right	1
2	00010980	Hex Cap Screw, 3/8-16, 1.50	2	31	01003009	Mounting Handle	2
3	00011861	Hex Cap Screw, 3/8-16, 2.5	4	32	01003011	Lever, Safety Switch	2
4	00022560	Hex Nut, 3/8-16, Lock Flange	31	33	01004889	Control Panel, LH	1
5	00060078	Grease Fitting, 1/4-28 x 3/16	2	34	01004890	Control Panel, RH	1
6	00013131	Hex Cap Screw, 1/4-20, .75	2	35	01003587	Switch Mounting Bracket, Lapbar	2
7	00012172	Hex Carriage Screw, 3/8-16 x 2	4	36	01001968	Link Mounting Control Shaft, Bracket	1
8	01000369	Hex Cap Screw, 3/8-16, 1.25	6	37	01003199	Stop, RH	1
9	01000372	Carriage Bolt, 3/8-16 x .75	15	38	01003200	Stop, LH	1
10	00012152	Lock Hex Nut, 1/4-20	2	39	01003591	Holder Shaft, Park Brake	4
11	01000450	Hex Jam Nut, 3/8-24	4	40	01003449	Decal , Right Hand Console	1
12	01000451	B/Joint, 3/8-24, Right Hand Female	4	41	01003450	Decal, Left Hand Console	1
13	01000628	Screw, TT, 1/4-20, 0.5, Hex Index Washer	22	42	01003451	Decal Right Hand Control	1
14	01000635	Nut, Lock, HexFlange, 5/16-18	7	43	01003452	Decal, Left Hand Control	1
15	00013406	Hex, Cap Screw, 5/16-18 x 3/4	4	44	01003561	Nut, Hex, Center Lock, M8 x 1.2	4
16	01000960	Belle Washer, .325 x .930 x .045	2	45	00022223	Grip, 1	2
17	01002990	Belle Crank Assembly, includes:	2	46	01000397	Spacer, .406 ID x 1.00 OD x .38	4
	01000308	Bushing	2	47	01007359	Lapbar Handle, One Position	2
18	01001727	Cylinder Return to Neutral	2	48	01005870	Side Label, CCC	2
19	01003044	Hub Assy, Control LH Bearing	1	49	01003857	Label, Ingnition, 2.5 Diameter	1
	01004265	Bearings	2	50	01003858	Label, Control, Throttle and Choke	1
20	01003045	Hub Assy, Control RH Bearing	1	51	01005784	Bracket Assembly, Mount Dampener	2
	01004265	Bearings	2	52	01004003	Flat Washer, 5/8 Nylon	8
21	01002511	Nut, 3/8-16, Jam	2	53	01004127	HHCS, 3/8-16, 3.00	2
22	01002980	Shaft Mounting Belle Crank	2	54	00009812	Flat Washer, 5/16	4
23	01002982	Rod Connector 3/8 OD x 10.125	2	55	00012226	Grease Fitting, 90°, 1/4-28	2
24	01002983	Rod Connector, 3/8 OD x 4.28 LG LH	1	56	00013092	HHCS, 5/16-18 x 1.0	1
25	01002984	Rod Connector, 3/8 OD x 8.06 LG RH	1	57	01006350	Shaft Collar, .625 ID, 1.00 OD, .438 Lg	2
26	01002986	Nut, 3/8-24, Jam, LH Third	4	58	01003947	U-Nut, 3/8-16 x .75	2
27	01002987	B/Joint, 3/8-24, LH Female	4	59	01005851	External Lock Washer	2
28	01002988	Screw, Shoulder Control Rod	2	60	01000629	Screw, TT, 1/4-20, 0.75, Hex Index Washer	1
29	01005769	Side Panel, Control, Left	1				

Drive Assembly- Figure 10 and Parts List

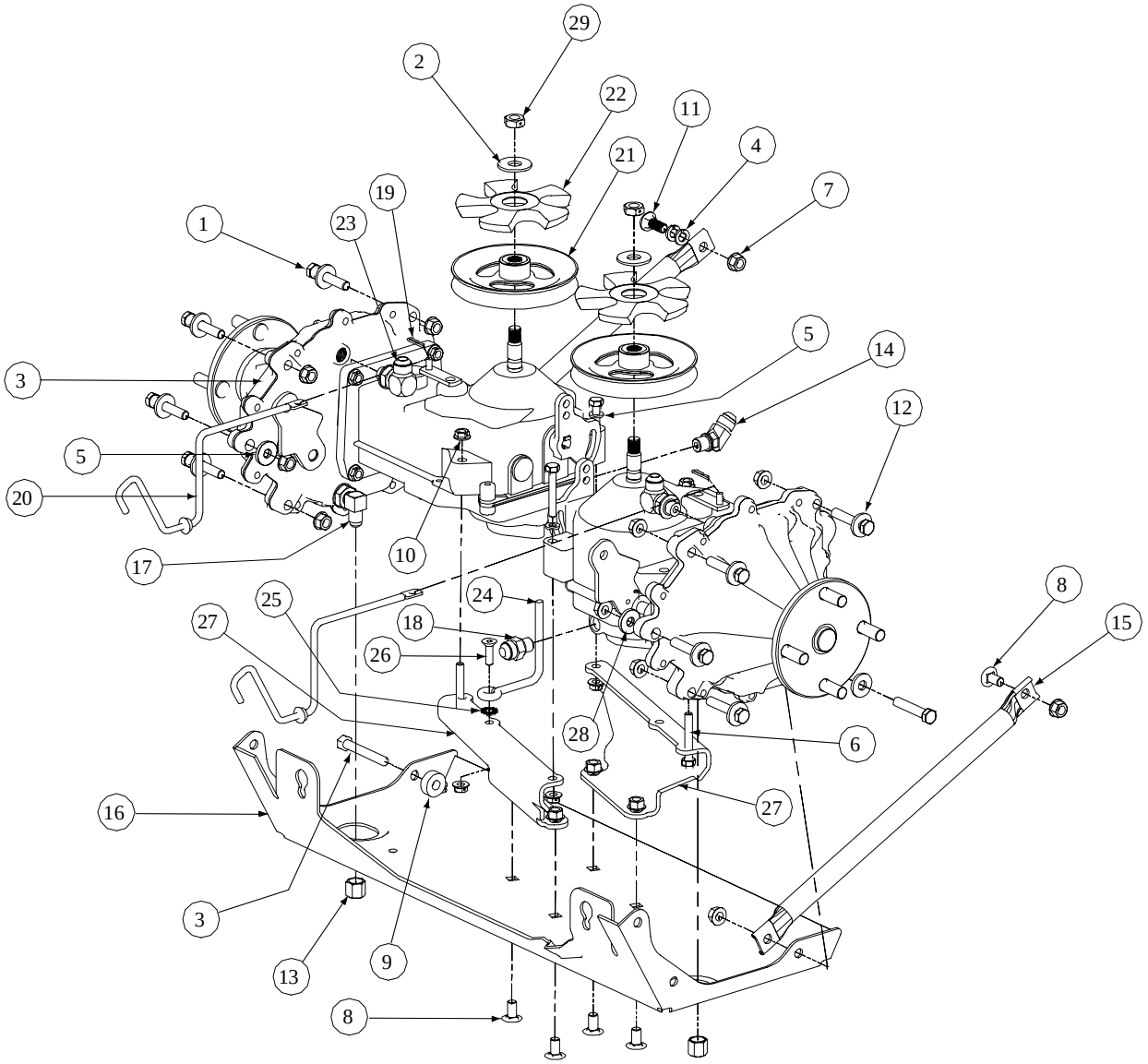

GD: 01002578-P20

Ref. No.	Part No.	Description	Qty.	Ref. No.	Part No.	Description	Qty.
1	00002528	Hex Cap Screw, 3/8-16 x 2	9	16	01001620	Skid Plate	1
2	00011459	Flat Washer, 1/2	2	17	01002602	Elbow Fitting, 3/8 x 3/8	2
3	00011861	Hex Cap Screw, 3/8-16 x 2.5	1	18	01002606	Fitting, 1/2 x 3x8	1
4	00012157	Lock Washer, 3/8	2	19	01002771	Cotter Pin, .072 x 1.12 Long	2
5	00012169	Flat Washer, 5/16	2	20	01003268	Pump Release Rod	2
6	00013198	Hex Cap Screw, 5/16-18 x 2	4	21	01003732	Slotted Hydro Pulley	2
7	00022560	Flange Lock Hex Nut, 3/8-16	16	22	01005339	Pulley Hydro Fan	2
8	01000372	Carriage Bolt, 3/8-16 x .75 Long	5	23	01004542	Elbow Fitting, O-Ring 3/8, 1/2 Flare	2
9	01000397	Spacer, .406 ID x 1.00 OD x .38	1	24	01005114	Belt Guide	1
10	01000635	Hex Flange Lock Nut, 5/16-18	5	25	01005851	Washer	1
11	01000643	Carriage Bolt, 3/8-16 x 1	1	26	01005852	Screw, 5/16-18 x 1.00	1
12	01000723	Washer, .406 ID x 1.0 OD x .105	10	27	01006165	Support Mount Bracket	2
13	01001623	Nut Cap, 3/8	2	28	01007238	Flat Washer, .385 x 1.0 OD x .13	2
14	01001975	Elbow Fitting, 3/8 - 1/2 x 45°	1	29	01008229	Nut, 1/2-20, Center Lock	2
15	01001618	Frame Strut	2				

Seat Assembly- Figure 11 and Parts List

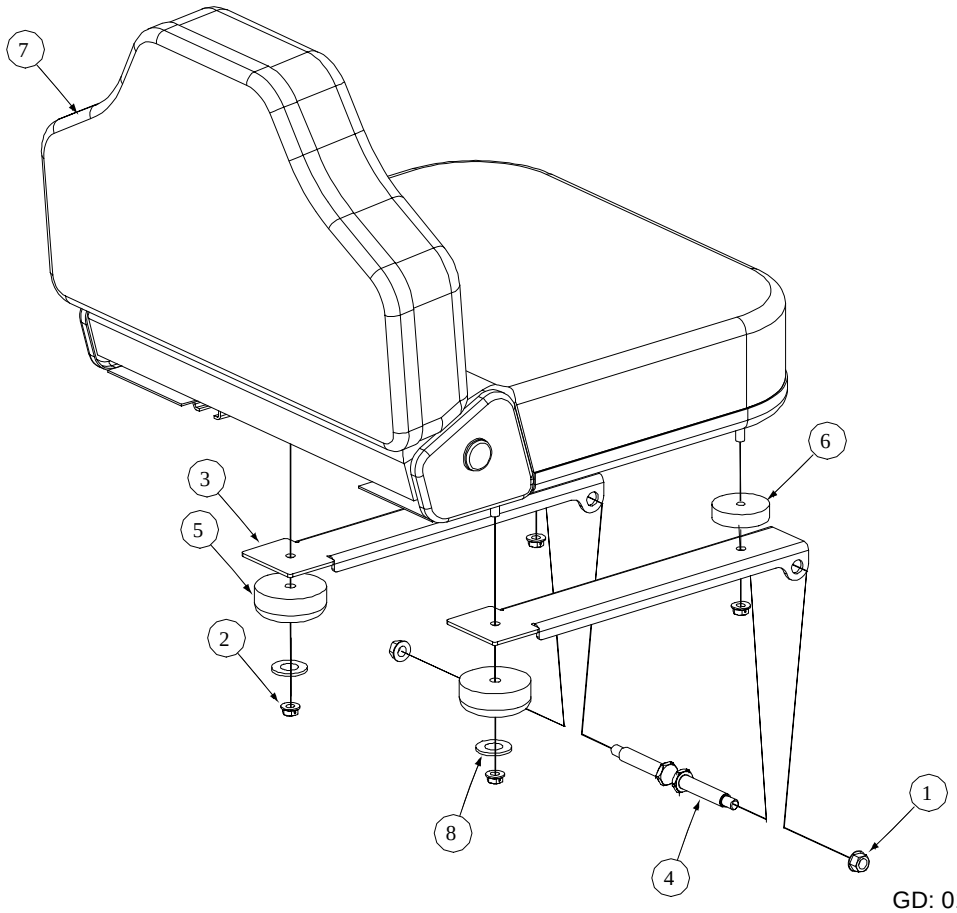

GD: 01007314-P01

Ref. No.	Part No.	Description	Qty.
1	00022560	Nut, Hex 3/8-16 Flange Lock	2
2	01000635	Lock Nut, Hex Flange, 5/16-18	4
3	01001630	Mounting Bracket, Seat	2
4	01002634	Shoulder Screw, .50x2.345, 3/8-16	2
5	01002753	Grommet, 2.5 OD x 1.0 Long	2
6	01000937	Spacer, .412 x 1.125 x .44	2
7	01006545	Adjustable Seat, Black	1
8	01000960	Flat Washer, .406 ID, 1.00 OD, .105	2

18HP Kohler Engine Assembly - Figure 12

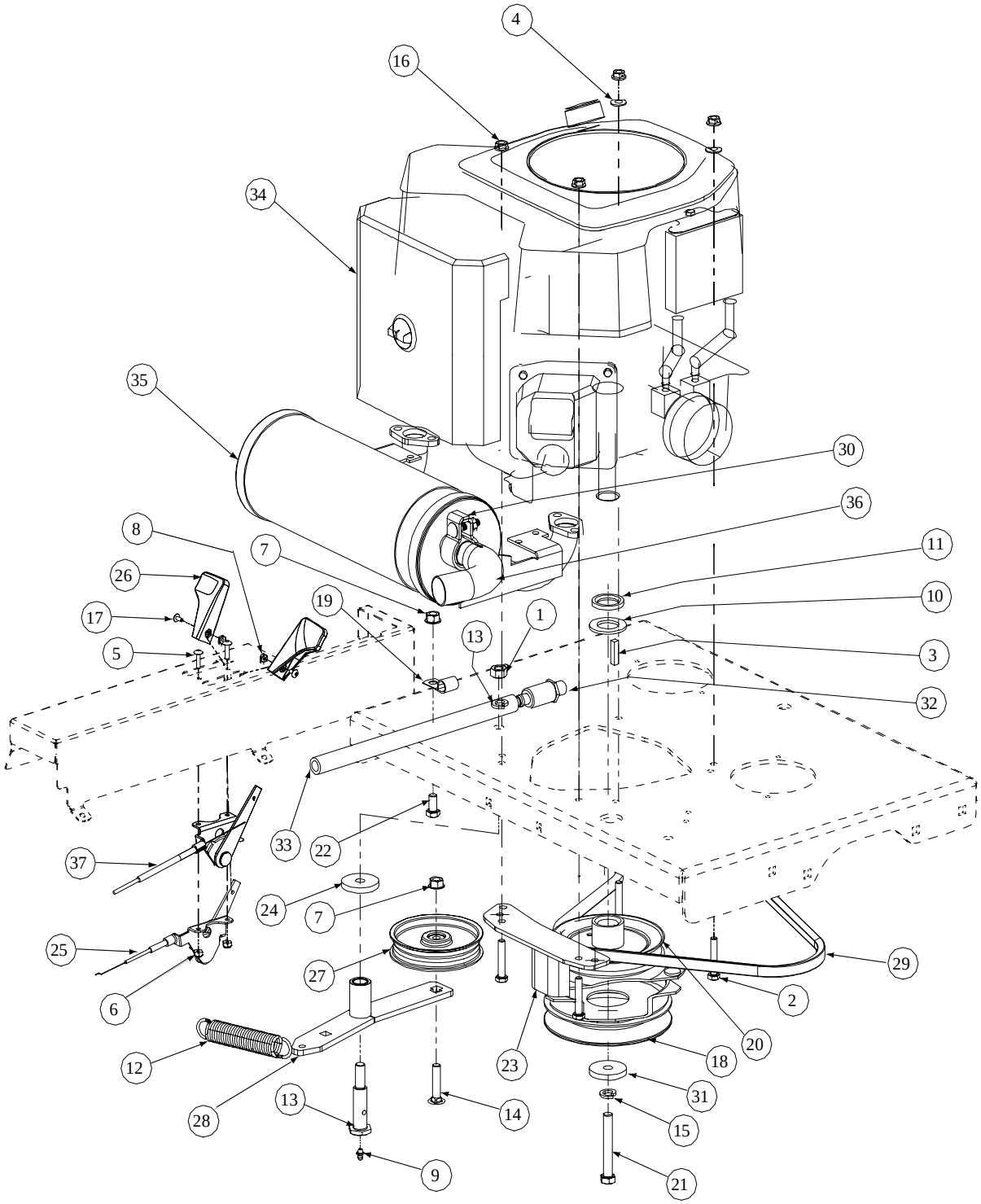

Description	Part Number
Air Filter	KH-47-083-03
Pre Filter	KH-24-083-02
Fuel Filter	KH-24-050-02
Oil Filter	KH-12-050-08
Spark Plug	759-3336
Gasket Exhaust (2)	--

GD: 01006496-P04

18HP Kohler Engine Assembly - Parts List for Figure 12

Ref No	Part No.	Description	Qty.
1	00005763	Hex Nut, 7/16-14	1
2	00006129	HHCS, 5/16-18, 1-3/4	4
3	00010022	Key, 1/4 x 1-1/8	1
4	00012169	Flat Washer, 5/16	2
5	00014602	Round Hd. Machine Screw, 10-32 x 3/4	2
6	00014608	Lock Nut, Nylon Insert, 10-32	2
7	00022560	Flange Lock, Hex Nut, 3/8-16	2
8	00060056	Nut Washer, W/Star, 8-32	2
9	00060078	Grease Fitting, 1/4-28 x 3/16	1
10	00072586	Flat Washer	1
11	00073094	Engine Spacer	1
12	01000199	Extension Spring, 1.0 OD x 5.00	1
13	01000302	Shoulder Screw, 7/16-14	1
14	01000364	Hex Carriage Screw, 3/8-16, 1.75	1
15	01000389	Lock Washer, 7/16	2
16	01000635	Hexflange Lock Nut, 5/16-18	4
17	01000721	Machine Screw, 8-32, .375	2
18	01000725	Electric Clutch	1
19	01000728	Clip, Heat Shield Cable	1
20	01000737	Transmission Drive Pulley	1
21	01000813	Capscrew, 7/16-20 x 3.00	1
22	01002601	Hex Cap Screw, 3/8-16, .750	1
23	01007358	Retainer Clutch Assembly, Ogura	1
24	01003269	Flat Washer, 7/16 ID x 1.75 OD x .25	1
25	01003273	Throttle, Control Cable, 45.0	1
26	01004004	Control Throttle Knob	2
27	01004081	Flat Pulley with Flanges	1
28	01005006	Engine Idler Arm Assembly	1
29	01005010	V Belt, A Section x 47.3	1
	00023887	Belt: To be used with new sub-frame	1
30	01005084	Tube Clamp, 1.375	1
31	01005314	Flat Washer, 7/16 IDx 1.750 OD x .250T	1
32	01006221	Oil Drain	1
33	01006223	Oil Drain Hose	1
34	01006564	18HP Kohler Engine	1
35	01006566	18HP Kohler Exhaust	1
36	01007205	Muffler Accessory Exhaust Tube	1
37	01008256	Choke, Control Cable, 38.0	1
Note: Use 10W40 Engine Oil			

18HP Electrical Engine Assembly - Figure 13 and Parts List

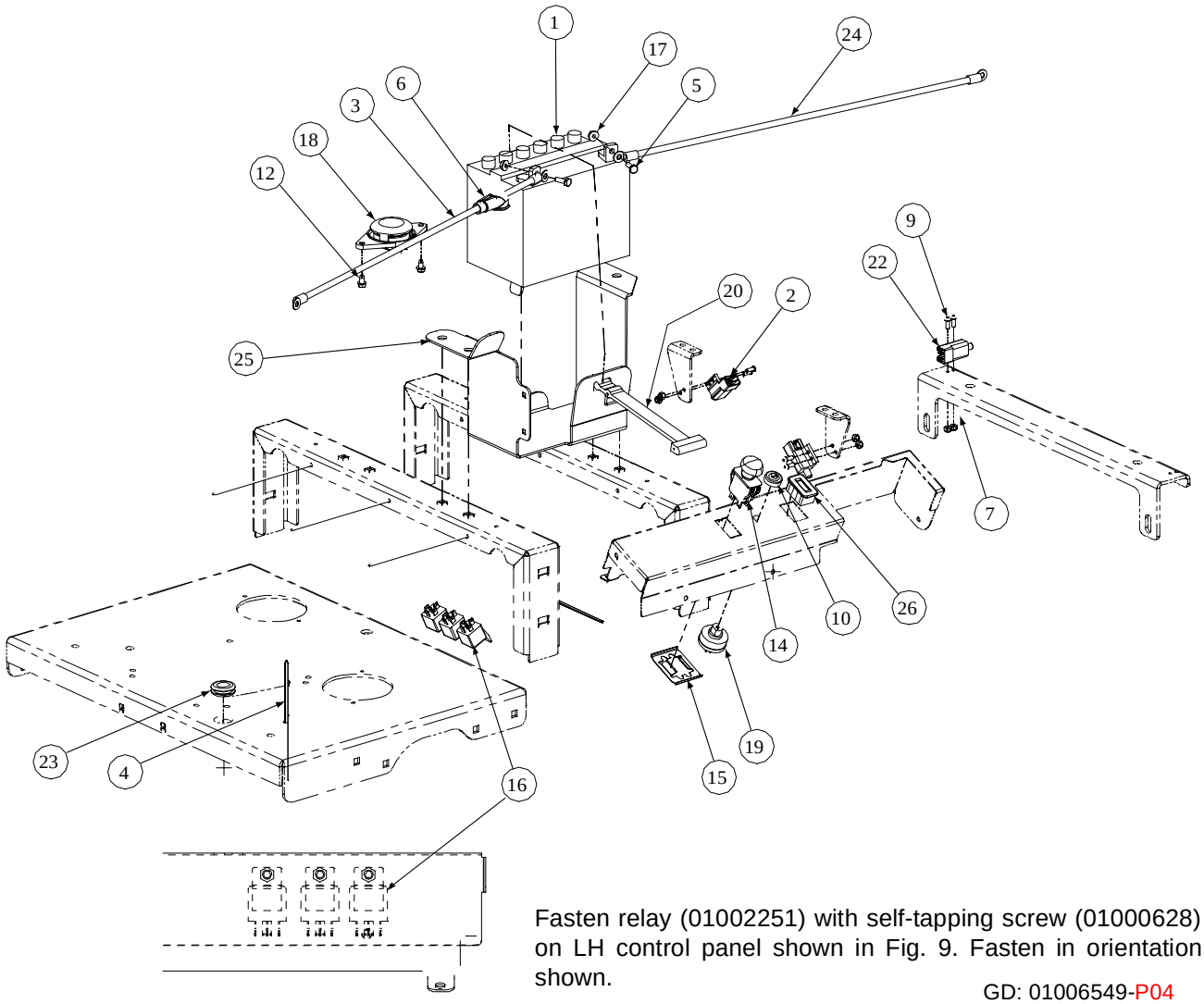

Fasten relay (01002251) with self-tapping screw (01000628) on LH control panel shown in Fig. 9. Fasten in orientation shown.

GD: 01006549-P04

Ref. No.	Part No.	Description	Qty.	Ref. No.	Part No.	Description	Qty.
1	00012032	Battery	1	14	01002111	Switch, Electric, PTO	1
2	00012242	Switch, Safety	2	15	01002160	Bracket, PTO Switch Retainer	1
3	00012289	Cable, Battery, Red, 36"	1	16	01002251	Relay, 12V 40A	3
4	00012470	Tie, Cable, 3/16 x .05 x 7.4"	5	17	01002766	Nut, 1/4-20, Hex Flange Lock Nut	2
5	00013131	Screw, Hex, Cap, 1/4-20 x .75	2	18	01003277	Switch, Seat N/C	1
6	00013258	Boot, 1" OD Rubber Battery-PST, Red	1	19	01003581	Switch, Ignition, 6 Pin	1
7	00014608	Nut, Lock, Nylon Insert, #10-32	6	20	01003649	Strap, Battery	1
8	--	--	--	21	01003678	Harness Assembly, kohler (not shown)	1
9	00030906	Screw, Phillips Head, Machine, 10-32 x 5/8	6	22	01003712	Switch, Plunger	1
10	00032097	Nut, W/Cap, 5/8-32 Ignition	1	23	01004040	Grommet, .75 ID	1
11	--	--	--	24	01004078	Cable, Battery Black, 24"	1
12	01000628	Screw, TT, 1/4-20 x .500, Hex Index Washer	2	25	01009995	Mount Bracket, Battery	1
13	01001811	Hourmeter, Harness (not shown)	1	26	01005389	Meter, Hour	1

Floor Panel Assembly- Figure 14 and Parts List

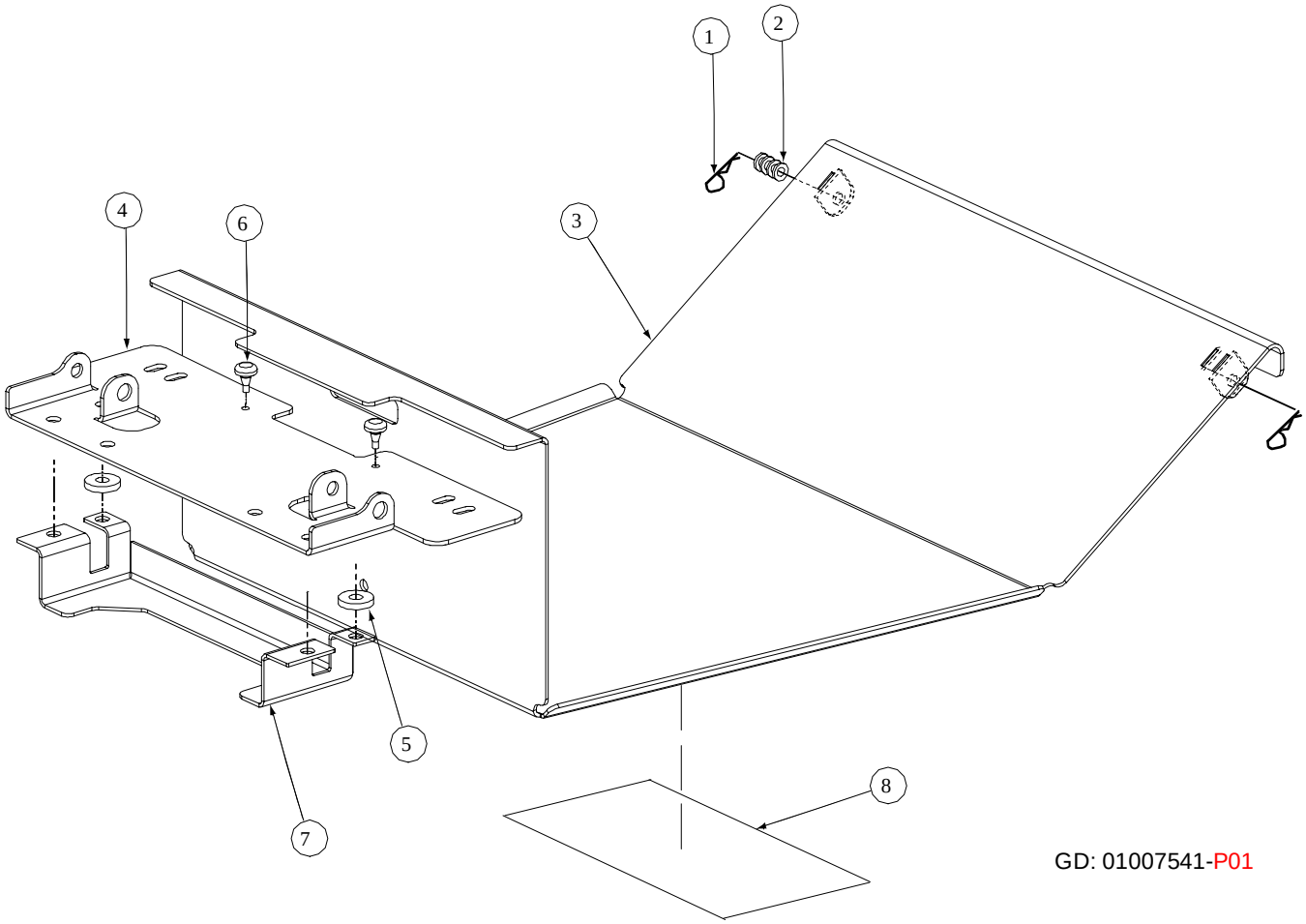

GD: 01007541-P01

Ref. No.	Part No.	Description	Qty.
1	00021956	Hair Pin, 3/8-1/2	2
2	00012158	Washer	AR
3	01007560	Floor Panel Assembly	1
4	01001638	Panel Seat	1
5	00083192	Washer	2
6	01001170	Rubber Bumper, .62 OD x .22 Thick	2
7	01004726	Support, Seat Bracket	1
8	01004992	Label, Belt Routing and Lubrication	1

Lift Assembly - Figure 15

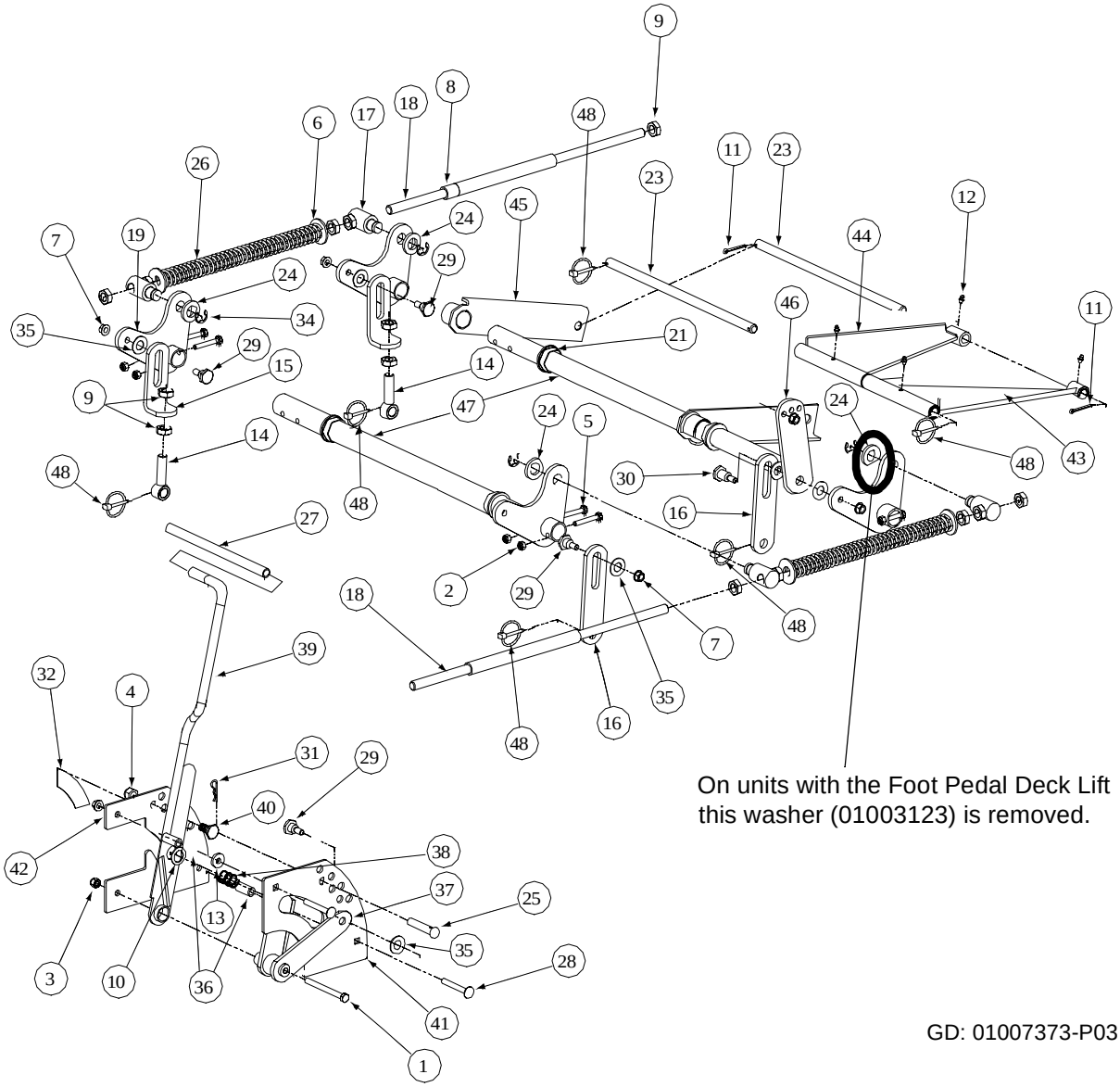

On units with the Foot Pedal Deck Lift this washer (01003123) is removed.

GD: 01007373-P03

OPTIONAL FOOT PEDAL DECK LIFT

Ref. No.	Part No.	Description	Qty.
1	00012152	Lock Nut, Nylon Insert, 1/4-20	4
2	00012577	Washer, 1/2 x 1 Shim	1
3	01006786	Detent Pin w/Lanyard, 1/4"	1
4	00013131	Hex Cap Screw, 1/4-20, .75	2
5	--	--	--
6	00022560	Hex Nut, Flange Lock 3/8-16	1
7	01000944	Hex Cap Screw, 1/4-20, 1.00	2
8	01004118	Shoulder Screw, .50x.27 Lg., 3/8-16	1
9	01006409	Foot Lift Backup Pedal	1
10	01006352	Deck Foot Pedal Lift	1
11	01008359	Deck Foot Pedal Lift Holder	1
12	01006418	Deck Foot Lift Pad	1
13	00062715	Turnbuckle Sleeve	2

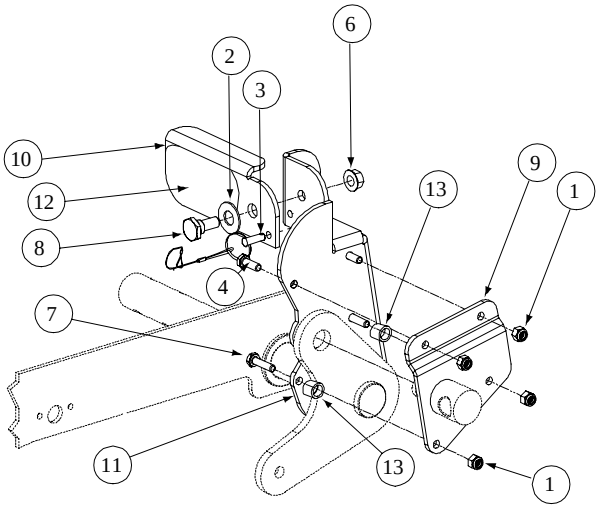

Lift Assembly - Parts List for Figure 15

Ref. No.	Part No.	Description	Qty.
1	00011925	Hex Cap Screw, 3/8-16, 3.75	1
2	00012165	Nut, 5/16-18, Nylock	8
3	00012173	Nylock Insert Lock Nut, 3/8-16	1
4	00012428	Nylock Insert Lock Nut, 1/2-13	1
5	01007962	Socket Head Capscrew, 5/16-18 x 2	8
6	00013432	Flat Washer, 5/8	4
7	00022560	Hex Nut, Flange Lock, 3/8-16	7
8	01006823	PVC Hose, 5/8 ID x 13/16 OD x 8"	2
9	00035632	Jam Nut, 5/8-11	14
10	00060017	Flat Washer, .06, .776, 1.25	1
11	00060018	Cotter Pin, 3/16 x 1-1	2
12	00060078	Grease Fitting, 1/4-28 x 3/16	4
13	00083192	Idler Washer	1
14	01001744	Eye Bolt, 5/8ID	2
15	01004917	Eye Bolt Mount Link, 5/8 ID	2
16	01004918	Deck Link	2
17	01001855	Ferule Lift	4
18	01001857	Lift Connector Rod	2
19	01008207	Bellecrank Weldment Lift	4
20	--	--	--
21	01001930	Hex Flange Bearing, 1.25 ID	4
22	--	--	--
23	01002586	Front Lift Link, Rod Mount	2
24	01003123	Spacer, .812 ID x .268 Lg.	4
25	01003284	Clevis Pin, .500 Dia. x 2.625 Lg.	1
26	01003318	Lift Compression Spring	2
27	01007561	Lift Handle Grip	1
28	01003534	Carriage Bolt, 3/8-16, 2.75	2
29	01003535	Shoulder Screw, 0.625 OD x .437 Lg.	4
30	01003536	Shoulder Screw, 0.625 OD x .830 Lg.	1
31	01003537	Cotter Pin, .148 x 3.00	1
32	01006536	Decal Height Indicator	1
33	--	--	--
34	01003994	E Clip, 3/4 Dia.	4
35	01004003	Nylon Flat Washer, 5/8	6
36	01004080	Spacer, .39 ID x .63 OD x 1.442	2
37	01004924	Lift Pivot Assembly	1
38	01004971	Lift Handle Spring	1
39	01007469	Lift Handle Assembly	1
40	01004984	Shoulder Screw, 5/8 OD x 0.264	1
41	01007368	Outer Lift Index Plate	1
42	01007371	Inner Lift Index Plate	1
43	01001738	Bearing Lift Brace Assembly, Right Hand	1
44	01003991	Bearing Lift Brace Assembly, Left Hand	1
45	01005569	Front Frame Strut Assembly	2
46	01006365	Lift Link Adjustment	1
47	01007681	Lift Shaft Holder	2
48	01003993	Linch Pin, 3/16	6

Assembly Pump Right Hand- Figure 16 and Parts List

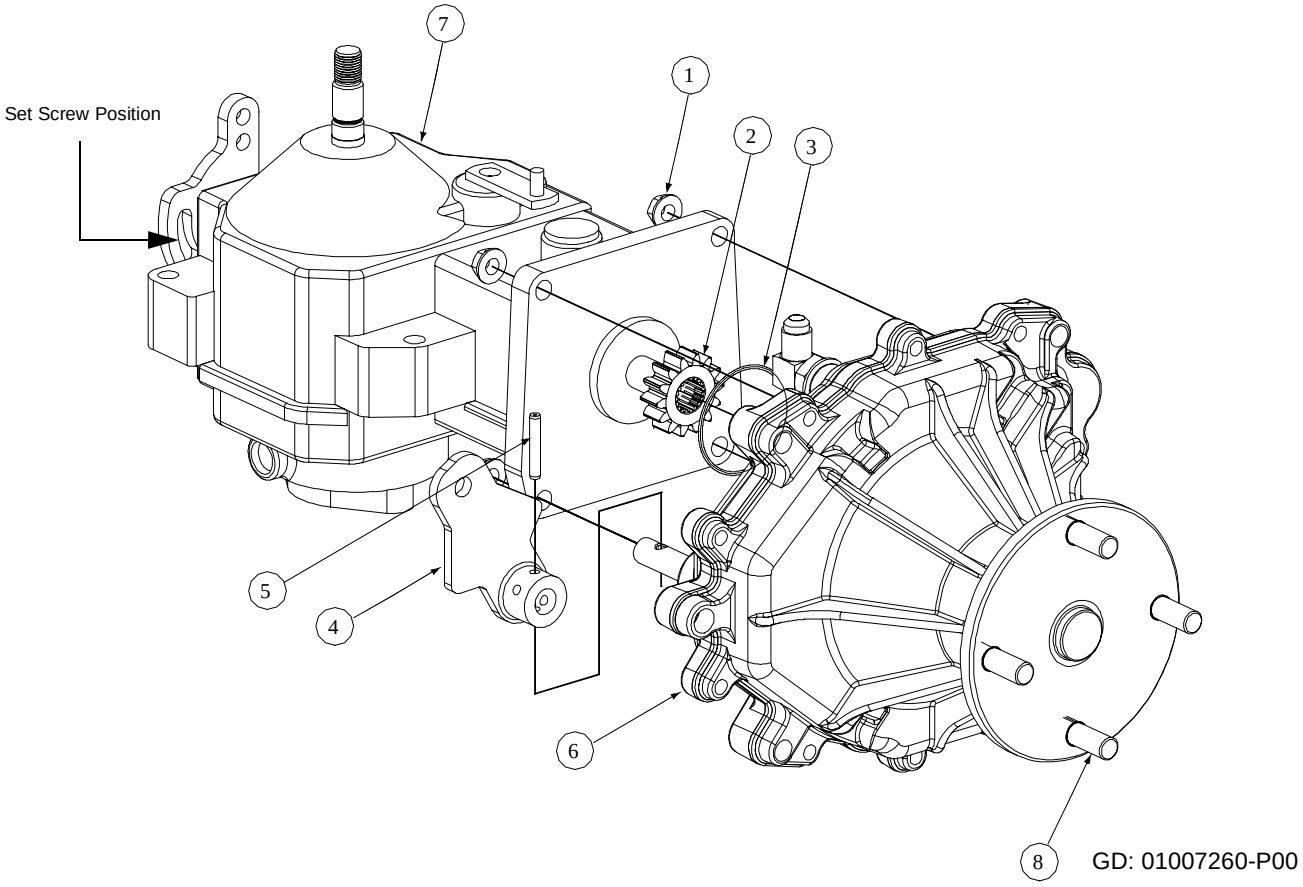

Ref. No.	Part No.	Description	Qty.
1	01000635	Hex Flange, Lock Nut, 5/16-18	4
2	01001807	Gear, Spur, 14T	1
3	01001808	O-Ring, 2.00 x .070	1
4	01001809	Parking Brake Lever	1
5	01001995	Pin, Spirol, 3/16 x 1.25 HD	1
6	01007264	Transmission Assembly	1
7	01004296	Pump	1
8	01000548	Rib Neck Stud, 1/2-20	4
9	01004161	Set Screw, 5/16 - 24 x 1.25	1

Assembly Pump Left Hand- Figure 17 and Parts List

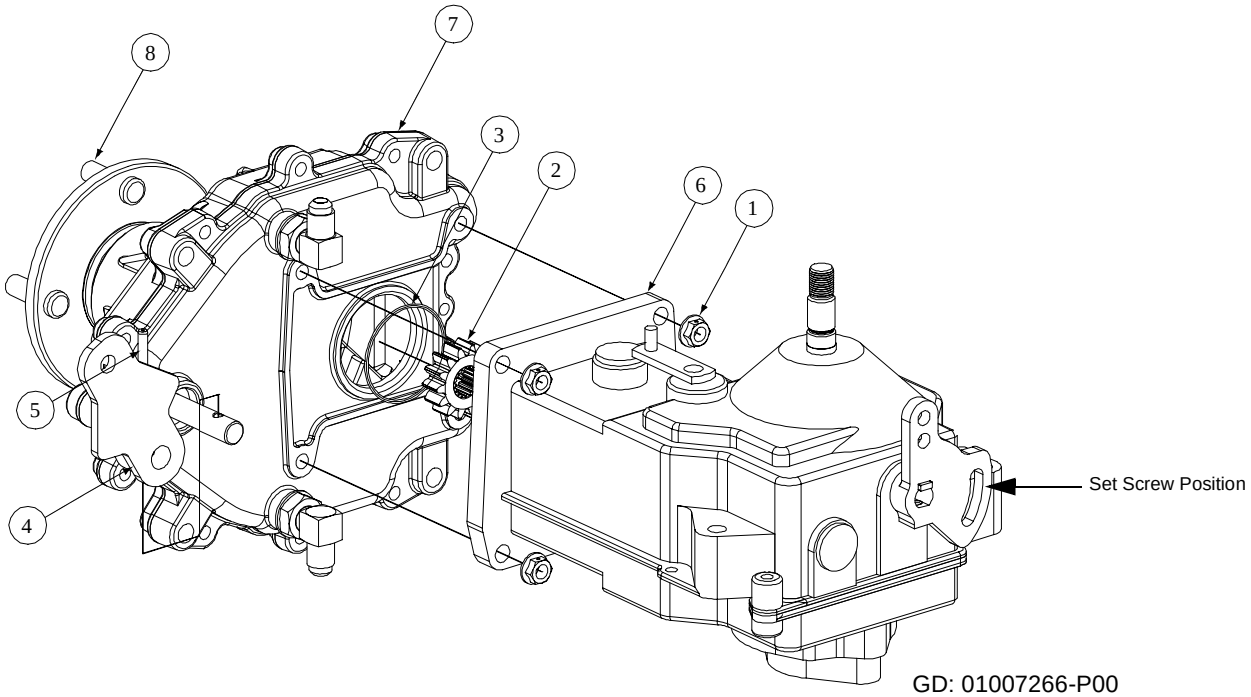

GD: 01007266-P00

Ref. No.	Part No.	Description	Qty.
1	01000635	Lock Nut, Hex Flange 5/16-18	4
2	01001807	Gear, Spur, 14T	1
3	01001808	O-Ring, 2.00 x .070	1
4	01001809	Parking Brake Lever	1
5	01001995	Pin, Spirol, 3/16 x 1.25 HD	1
6	01001545	Pump	1
7	01007264	Transmission Assembly	1
8	01000548	Rib Neck Stud, 1/2-20	4
9	01004161	Set Screw, 5/16 - 24 x 1.25	1

Frame Assembly- Figure 18 and Parts List

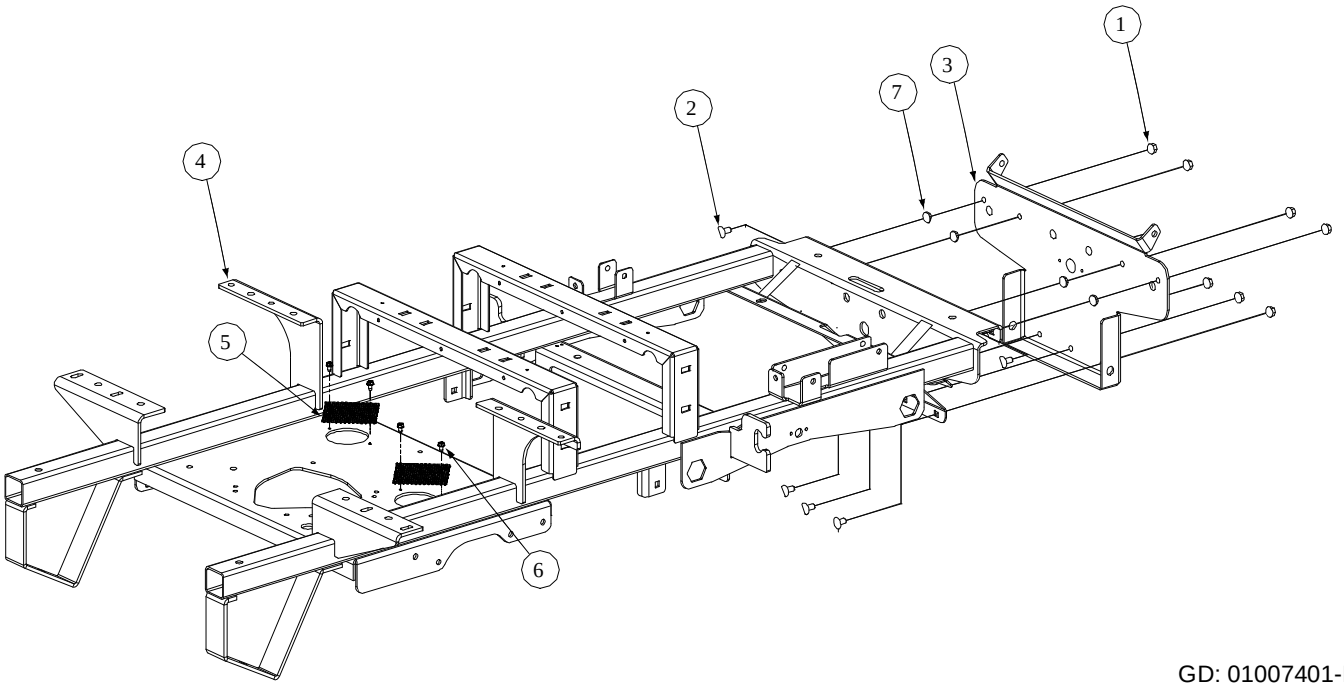

GD: 01007401-P03

Ref. No.	Part No.	Description	Qty.
1	00022560	Hex Nut, 3/8-16 Flange Lock	7
2	01000372	Carriage Bolt, 3/8-16 x .75 Long	7
3	01001713	Bracket Assembly, Frame, Front	1
4	01001617	Frame Assembly	1
5	01005680	Cover, Hydro Fan	2
6	01000864	Screw, TT, 1/4-20 x 0.375	4
7	01008225	Push Retainer, 3/8"	4

Notes

Notes

Notes



Cub Cadet Commercial
P.O. Box 368023
Cleveland, OH 44136

Form No. 01007351 Rev. 04-1 3/29/2004