Hydrostatic Zero-Turn Residential Riding Mower

Turf Equipment

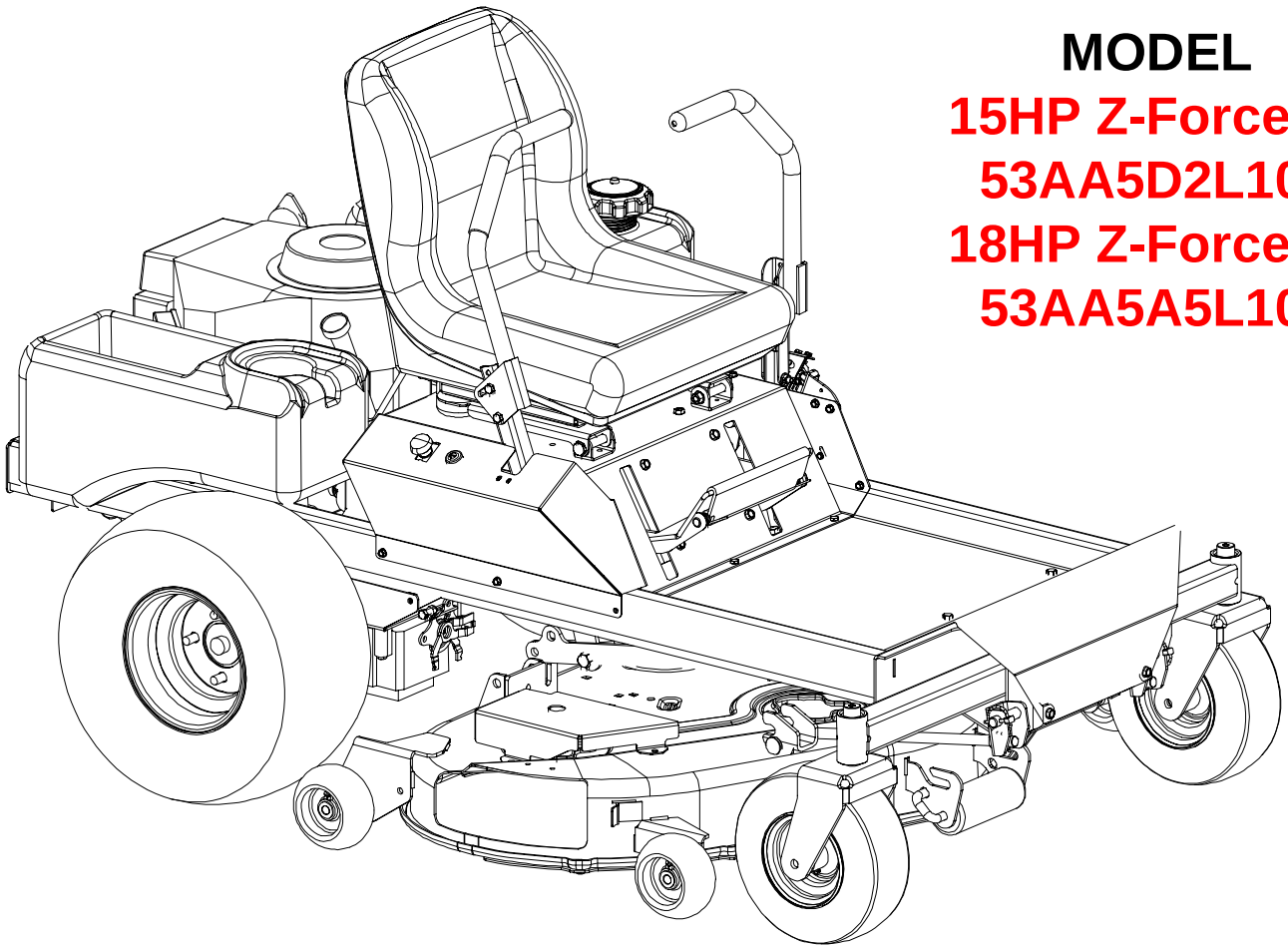

MODEL

15HP Z-Force 44
53AA5D2L100
18HP Z-Force 44
53AA5A5L100

OPERATOR'S AND SERVICE MANUAL

TABLE OF CONTENTS

Foreword . . . 3
General Safety Operations . . . 4
A. General Operation . . . 4
B. Slope Operation . . . 5
C. Children . . . 5
D. Service . . . 6
Safety Decals . . . 7
Specifications . . . 8
Operating Instructions . . . 9
A. General . . . 9
B. Controls . . . 10
C. Initial Adjustments . . . 12
D. Zero Turn Break-In and Operating Procedures . . . 13
Maintenance and Service . . . 15
A. Mower Deck . . . 15
B. Hydrostatic Drive System . . . 17
C. Electrical Circuit . . . 17
D. Tires . . . 19
E. Brakes . . . 20
F. Hydraulic System . . . 20
G. Storage . . . 21
Maintenance Schedule . . . 21
Performance Adjustments . . . 23
A. High Speed Tracking Adjustment . . . 23
B. Engine RPM Check and Adjustment . . . 23
C. Deck Corner Ball Wheel Roller Settings . . . 24
D. Deck Center Anti-Scalp Roller Settings . . . 24
E. Lap Bar Adjustment . . . 24
F. Deck Leveling Procedure . . . 24
Wiring Diagram . . . 26
Slope Gauge . . . 27
Warranty . . . Back cover

This product may be covered by one or more of the following patents:
D409,208; 5,946,894; 6,070,690; Pending

FORWARD

The Hydrostatic Zero-Turn Riding Mower provides superb maneuverability and mid-mount cutting. The machine incorporates many safety features that should be studied by all operators before use. The list of safety precautions should receive particular attention.

This manual presents all of the operating and maintenance instructions necessary to keep your mower at peak efficiency. If operated and maintained properly, your mower will give dependable service.

⚠ CAUTION:

Only thoroughly trained persons should operate and maintain this mower. This machine can cause serious injury to anyone who misuses it and does not understand its operation. For their personal safety, all operators are required to read this entire manual before operating the mower.

Hazard control and accident prevention are partially dependent upon the design and configuration of the equipment. Awareness, concern, prudence and proper training of the personnel involved in the operation, transport, maintenance and storage of the equipment, are essential for hazard control and accident prevention.

⚠ WARNING

- The engine exhaust, some of its constituents, and certain vehicle components contain or emit chemicals known to the State of California to cause cancer, birth defects or other reproductive harm.
- This unit is equipped with an internal combustion engine and should not be used on or near any unimproved forest-covered, brush-covered, or grass-covered land unless the engine's exhaust system is equipped with a spark arrester meeting applicable local or state laws (if any). If a spark arrester is used, it should be maintained in effective working order by the operator.
- In the State of California, the above is required by law (Section 4442 of the California Public Resources Code). Other States may have similar laws. Federal laws apply to federal lands. A spark arrester muffler may be available.

IMPORTANT SAFE OPERATION PRACTICES

⚠ THIS SYMBOL POINTS OUT IMPORTANT SAFETY INSTRUCTIONS WHICH, IF NOT FOLLOWED, COULD ENDANGER THE PERSONAL SAFETY AND/OR PROPERTY OF YOURSELF AND OTHERS. READ AND FOLLOW ALL INSTRUCTIONS IN THIS MANUAL BEFORE ATTEMPTING TO OPERATE YOUR UNIT. FAILURE TO COMPLY WITH THESE INSTRUCTIONS MAY RESULT IN PERSONAL INJURY. WHEN YOU SEE THIS SYMBOL- ⚠ **HEED ITS WARNING.**

⚠ DANGER

Your lawn mower was built to be operated according to the rules for safe operation in this manual. As with any type of power equipment, carelessness or error on the part of the operator can result in injury. This lawn mower is capable of amputating hands and feet or throwing objects. Failure to observe the following safety instructions could result in serious injury or death.

GENERAL SAFETY OPERATIONS

⚠ A. GENERAL OPERATION

1. Read, understand and follow all instructions in the manual and on the machine before starting. Keep this manual in a safe place for future and regular reference and for ordering replacement parts.
2. Only allow responsible individuals familiar with the instructions to operate the machine. Know the controls and how to stop the machine quickly.
3. Do not put hands or feet under the cutting deck or near rotating parts.
4. Clear the area of objects such as rocks, toys, wire, etc. which could be picked up and thrown by the blades. A small object may have been overlooked and could be accidentally thrown by the mower in any direction and cause injury to you or a bystander. To help avoid a thrown objects injury, keep children, animals, bystanders and helpers at least 75 feet from the mower while it is in operation. Always wear safety glasses with side shields or safety goggles during operation or while performing and adjustment or repair, to protect eyes from foreign objects. Stop the blades when crossing gravel drives, walks or roads.
5. Be sure the area is clear of other people before mowing. Stop machine if anyone enters the area.
6. Never carry passengers.
7. Disengage the blades before shifting into reverse and backing up. Always look down and behind before and while backing.
8. Be aware of the mower and attachment discharge direction and do not point it at anyone. Do not operate the mower without either the entire grass catcher or the chute guard in place.
9. Slow down before turning. Operate the machine smoothly. Avoid erratic operation and excessive speed.
10. Never leave a running machine unattended. Always turn off the blades, place the transmission in neutral, set the parking brake, stop the engine and remove key before dismounting.
11. Turn off blades when not mowing.
12. Stop the engine and wait until the blades come to a complete stop before (a) removing the grass catcher or unclogging chute, or (b) making any repairs, adjusting or removing any grass or debris.
13. Mow only in daylight or good artificial light.

14. Do not operate the machine while under the influence of alcohol or drugs.
15. Watch for traffic when operating near or crossing roadways.
16. Use extra care when loading or unloading the machine into a trailer or truck. This unit should not be driven up or down a ramp onto a trailer or truck under power, because the unit could tip over causing serious personal injury. The unit must be pushed manually on a ramp to load or unload properly.
17. Never make a cutting height adjustment while the engine is running if the operator must dismount to do so.
18. Wear sturdy, rough-soled work shoes and closefitting slacks and shirts. Do not wear loose fitting clothes or jewelry. They can be caught in moving parts. Never operate a unit in bare feet, sandals or sneakers.
19. Check overhead clearance carefully before driving under power lines, wires, bridges or low hanging tree branches, before entering or leaving buildings, or in any other situation where the operator may be struck or pulled from the unit, which could result in serious injury.
20. Disengage all attachment clutches, set the parking brake to the on position and put the lap bars to the neutral or out position, before attempting to start the engine.
21. Your mower is designed to cut normal residential grass of a height no more than 10". Do not attempt to mow through unusually tall, dry grass (e.g. pasture) or piles of dry leaves. Debris may build up on the mower deck or contact the engine exhaust presenting a potential fire hazard.
22. Use only accessories approved for this machine by *Cub Cadet.* Read, understand and follow all instructions provided with the approved accessory.

B. SLOPE OPERATION

Slopes are a major factor related to loss of control and tip-over accidents, which can result in severe injury or death. **All** slopes require extra caution. If you cannot back up the slope or if you feel uneasy on it, do not mow it.

For your safety, use the slope gauge included as a part of this manual (see pg. 27) to measure slopes before operating this unit on a sloped or hilly area. If the slope is greater than 15 degrees as shown on the slope gauge, do not operate this unit on that area or serious injury could result.

DO:

• Mow across slopes, not up and down.
• Remove obstacles such as rocks, limbs, etc.
• Watch for holes, ruts or bumps. Uneven terrain could overturn the machine. **Tall grass can hide obstacles.**
• Use slow speed. Choose a low enough speed so that you will not have to stop while on the slope.
• Follow the manufacture's recommendations for counterweights with attachments to improve stability.
• Use extra care with grass catchers or other attachments. These can change the stability of the machine.
• Keep all movement on the slopes **slow** and **gradual.** Do not make sudden changes in speed or direction. Rapid acceleration or deceleration could cause the front of the machine to lift and rapidly flip over backwards, which could cause serious injury.
• Avoid starting or stopping on a slope. If the tires lose traction, disengage the blades and proceed slowly **straight** down the slope.

DO NOT:

• **Do not** turn on slopes unless necessary; then, turn slowly and gradually downhill, if possible.
• **Do not** mow near drop-offs, ditches or embankments. The mower could suddenly turn over if a wheel is over the edge of a cliff or ditch, or if an edge caves in.
• **Do not** mow on wet grass. Reduced traction could cause sliding.
• **Do not** try to stabilize the machine by putting your foot on the ground.
• **Do not** use the grass catcher on steep slopes.

C. CHILDREN

Tragic accidents can occur if the operator is not alert to the presence of children. Children are often attracted to the machine and the mowing activity. **Never** assume that children will remain where you last saw them.

1. Keep children out of the mowing area and in watchful care of an adult other than the operator.
2. Be alert and turn the machine off if children enter the area.
3. Before and when backing up, look behind and **down** for small children.
4. Never carry children, even with the blades off. They may fall off and be seriously injured or may interfere with safe machine operation.
5. Never allow children under 14 years old to operate the machine. Children 14 years and over should only operate the machine under

close parental supervision and proper instruction.

6. Use extra care when approaching blind corners, shrubs, trees or other objects that may obscure your vision of a child or other hazard.
7. Remove the key when the machine is left unattended to prevent unauthorized operation.

D. SERVICE

1. Use extreme care in handling gasoline and other fuels. They are extremely flammable and the vapors are explosive.
   a. Use only an approved container.
   b. Never remove fuel cap or add fuel with the engine running. Allow the engine to cool at least two minutes before refueling.
   c. Replace the fuel cap securely and wipe off any spilled fuel before starting the engine as it may cause a fire or explosion.
   d. Extinguish all cigarettes, cigars, pipes and other sources of ignition.
   e. Never refuel the machine indoors because fuel vapors will accumulate in the area.
   f. Never store the fuel container or machine inside where there is an open flame or spark, such as a gas hot water heater, space heater or furnace.
2. Never run a machine inside a closed area.
3. To reduce fire hazard, keep the machine free of grass, leaves or other debris build-up. Clean up oil or fuel spillage. Allow the machine to cool at least 5 minutes before storing.
4. Before cleaning, repairing or inspecting, make certain the blade and all moving parts have stopped. Disconnect the spark plug wire, and keep the wire away from the spark plug to prevent accidental starting.
5. Check the blade and engine mounting bolts at frequent intervals for proper tightness. Also visually inspect blades for damage (e.g., excessive wear, bent, cracked). Replace with blades which meet original equipment specifications.
6. Keep all nuts, bolts and screws tight to be sure the equipment is in safe working condition.
7. Never tamper with safety devices. Check their proper operation regularly. Use all guards as instructed in this manual.
8. After striking a foreign object, stop the engine, remove the wire from the spark plug and thoroughly inspect the mower for any damage. Repair the damage before restarting and operating the machine.
9. Grass catcher components are subject to wear, damage and deterioration, which could expose moving parts or allow objects to be thrown. For your safety protection, frequently check the components and replace with manufacturers recommended parts when necessary.
10. Mower blades are sharp and can cut. Wrap the blades or wear gloves, and use extra caution when servicing blades.
11. Check park brake operation frequently. Adjust and service as required.
12. Muffler, engine and belt guards become hot during operation and can cause a burn. Allow to cool down before touching.
13. Do not change the engine governor settings or overspeed the engine. Excessive engine speeds are dangerous.
14. Observe proper disposal laws and regulations. Improper disposal of fluids and materials can harm the environment and the ecology.
    a. Prior to disposal, contact your local Environmental Protection Agency to determine the proper method for disposing of the waste. Recycling centers are established to properly dispose of materials in an environmentally safe fashion.
    b. Use proper containers when draining fluids. Do not use food or beverage containers that may mislead someone into drinking from them. Properly dispose of the containers immediately following the draining of fluids.
    c. DO NOT pour oil or other fluids into the ground, down drain or into a stream, pond, lake or other body of water. Observe Environmental Protection Agency regulations when disposing of oil, fuel, coolant, brake fluid, filters, batteries, tires and other harmful waste.
15. We do not recommend the use of high pressure washers to clean your unit. They may cause damage to electrical components; spindles; pulleys; bearings; or the engine.

WARNING-YOUR RESPONSIBILITY: Restrict the use of this power machine to persons who read, understand and follow the warnings and instructions in this manual and on the machine.

SAFETY DECALS AND LABELS

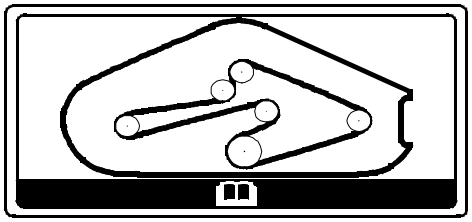

Part Number: 777I20847



Part Number: 777S30503

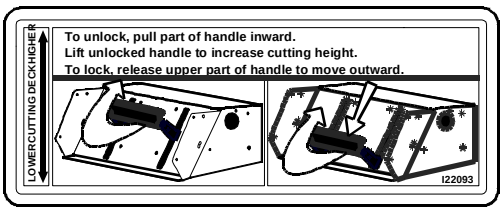

Part Number: 777I22093



Part Number: 777S32161

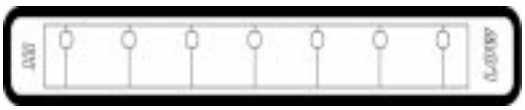

Part Number: 777I22094



Part Number: 777S30018

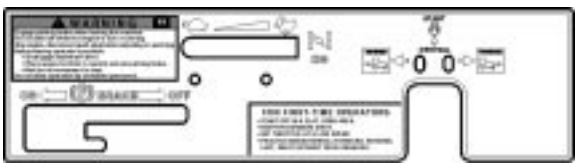

Part Number: 777I22095 (Kawasaki)
Part Number: 01009146 (Briggs & Stratton)

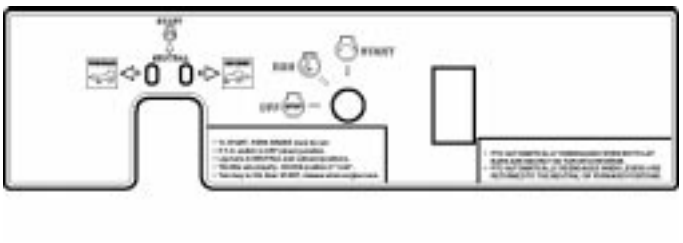

Part Number: 777I22096



Part Number: 777S30145

SPECIFICATIONS

Engine:	15HP Kawasaki or 18HP Briggs & Stratton
Type:	Vertical air cooled V-Twin
Air Cleaner:	Paper element
Lube System:	Pressurized with oil filter, drain valve with hose
Starter:	12-volt electric
Traction Drive:	Engine to two variable-speed integrated hydraulic pump and wheel motors on each drive wheel
Cutter Deck;Drive:	44" belt driven
Clutch:	Electric
Deck Lift:	Hand lever w/ lock for height adjustment
Cutting Height:	1-1/2" to 4"
No. of Blades	3, belt-driven, power take-off from engine
Controls:	Engine ignition and start switch; throttle & choke; left and right steering levers; electric blade clutch switch; parking brake; mower deck lift
Parking Brake:	Mechanical linkage attached to the brake handle
Front Caster Wheels:	11 x 5.00 - 5
Tire Pressure:	8-10 psi rear, 20-25 psi front caster
Drive Wheels:	18 x 8.50 - 8
Frame:	Structural steel, all welded construction
Seat:	Adjustable seat. 4" Adjustment, optional arm rests
Fuel Tank:	One 5 gallon with shut off valve
Ground Speed:	0-7 MPH forward. 0-3 MPH reverse
Instrumentation: (Optional)	Hour meter, Tachometer, Maintenance-minder,
Net Weight:	598 lbs w/44" deck

OPERATING INSTRUCTIONS

Figure. 1

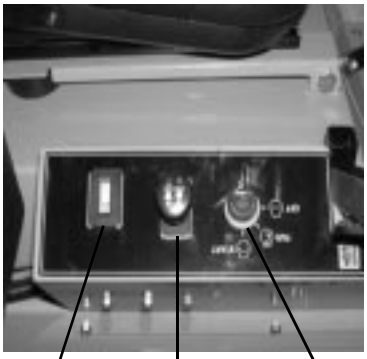

Figure. 2

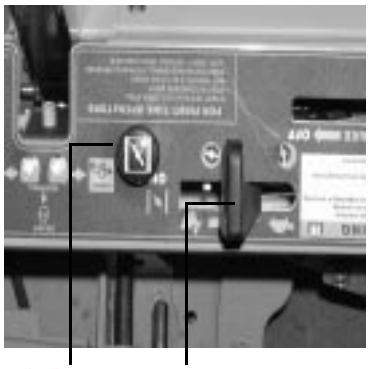

A. General

1. When Mowing:

a. Keep adults, children, and pets away from the area to be mowed.

b. When operating this mower, in the forward direction, do not allow the steering levers to return to neutral on their own. Always maintain a firm grip on the levers, operate them smoothly and avoid any sudden movements of the levers when starting and stopping.

c. If the mower is equipped for side discharge, never use the mower without the discharge chute installed and placed in the down position.

d. Always remove debris and other objects from the area to be mowed (Note: debris and loose grass will reduce traction).

e. Mow only in daylight or good artificial light.

f. Watch for holes, sprinkler heads, and other hidden hazards.

g. Avoid driving too close to trees, creeks, ditches, sand traps, and other obstacles.

h. Before backing up, check behind and watch where you are going.

i. Always reduce speed when making a turn, and when grass is wet.

j. Always mow across slopes, never up and down the slope. Do not operate on steep slopes and slow down before turning. Avoid turning downhill if possible, start at the bottom and work up to the top. Use extra care and go slowly when turning downhill.

k. Be careful when crossing gravel paths or roadways. Always turn off the blade clutch switch and wait until the blades stop rotating and raise the cutting deck to the transport position. Always allow other vehicles to have the right of way.

l. If you hit a solid object while mowing, turn off the blade clutch switch, place the steering levers in the neutral, opened-out position, move the throttle to slow, set the parking brake, shut off the engine, and take the key from the ignition switch. Inspect for damage. Repair the damage. Make sure the blades are in good condition and that the blade bolts are tight before restarting the engine.

m. Never leave the mower unattended without performing the following: turn off the blade clutch switch, placing the steering levers in the neutral open-out position, moving the throttle to slow, setting the parking brake, shutting off the engine and taking the key from the ignition switch.

n. Never walk or stand on the discharge side of the mower when the engine is running. Turn off the blade clutch switch if another person approaches while you are operating the mower.

o. Never attempt to operate the traction unit without having the mowing deck attached.

p. Keep the mower and especially the engine and hydraulic components clean and free of grease, grass, and leaves to reduce the chance of fire and permit proper cooling.

2. Safety Awareness when Mowing

a. Do not operate on steep slopes, those above 15 degrees (27% slope).

b. Avoid turning downhill if possible, use extra care and go slowly.

c. Avoid turning when going downhill, traction is at a minimum going downhill.
d. Do not operate with discharge side of the mower toward streets, buildings, playgrounds, parking lots, other machines, animals, and other people.
e. Avoid operation or use extreme care if the traction surface is wet, unstable, or slippery.
f. Use extra care when grass clippings, leaves, pine needles, or debris are present as traction can be reduced.
g. Slow-down before turning and come to a complete stop before any zero turn maneuver.
h. Do not stop machine or park machine over combustible materials such as dry grass, leaves, debris, etc.

3. To Mow Grass and Produce a Striped Pattern

a. Pick a point on the opposite side of the area to be mowed (post, tree, shrub, etc.).
b. If on a hillside, start at the bottom so that the turns are uphill rather than downhill.
c. Align the mower so as to head directly toward the object on the far side.
d. Slowly increase the speed of the machine to match cutting conditions, terrain, and operator familiarity with the controls and keep the machine headed directly toward the alignment object. Do not go fast as to reduce cut quality or to be uncomfortable in controlling the speed and direction of the machine.
e. When approaching the other end of a strip, slow down or stop before turning. A U-turn is recommended unless a zero turn is required. The speed of a U-turn that will allow for machine controllability and minimal turf defacement will be dependent on several factors including: the speed during turning, the radius of the turn, the tire tread pattern, the traction coefficient of the tire to the traction surface, the slope of the traction surface.
f. Remember, a zero turn requires that the forward or reverse travel of the machine be stopped prior to the initiation of the turn or severe turf defacement can occur.
g. To prevent rutting or grooving of the turf, change the direction that the strips are mowed by approximately 45 degrees the next and each subsequent time that the area is mowed.

B. Controls

1. **Engine Ignition and Start Switch:** (See Figure 1.) Located on the instrument housing below the right side of the operator's seat. When the key is inserted and turned clockwise, 45 degrees, the ignition circuit is closed. Turning the switch further against spring pressure starts the engine. The engine will only start if the blade clutch switch is in the "off" position, the parking brake is engaged and the left and right steering levers are in the neutral, opened-out position. The key should always be removed from the switch if the operator leaves the mower's seat.
2. **Engine Throttle Control:** (See Figure 2.) Located on the left side of the mower next to the operator's seat. Moving the throttle control from the rear to the front will increase the engine speed from slow to fast. Stop at the detent, or the choke will be activated.
3. **Left and Right Steering Levers:** (See Figure 3.) These hinged levers open out to the side in the neutral position to permit the operator to be seated or to leave the mower's seat. The operator, when seated, can pull the levers up to the operating position, a comfortable forearm's length away. These levers control all of the movements of the mower. Pushing both levers forward causes the mower to move forward. Pulling both levers back causes the mower to move backward. Pushing one lever ahead of the other lever causes the traction wheel on the side where the lever is ahead to rotate faster than the other traction wheel, making the mower turn toward the side where the lever is behind. When one lever is pushed forward and the other lever pulled back the same amount, one traction wheel will turn in reverse and the mower will turn within its own length.

   In order to start the engine, both steering levers must be opened out to the side in the neutral position; the parking brake must be engaged; and the blade clutch switch must be "off". However, once the engine starts, the parking brake must be released before the operator places the steering levers into the operating position or the engine will automatically shut off.

Note: The Steering Lever will return toward neutral when released, but they should be placed in neutral by the driver. If the Drive Handles are not placed in neutral, the tractor may creep.

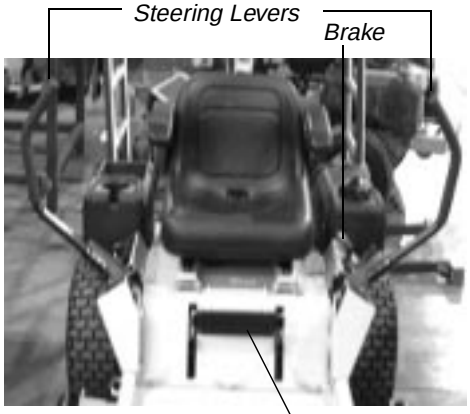

Figure. 3

4. **Electric Blade Clutch Switch:** (See Figure 1.) Located on the right side of the mower beside the ignition switch. This is an “on/off” push-pull switch that controls the electric blade clutch which supplies power to the cutting blades through the PTO. The switch must be turned off to start the engine and should be turned off for safety any time another person approaches the mower or the mowing deck is raised to the transport position. Power to the electric clutch will also be cut off if the operator leaves the operator’s seat.
5. **Parking Brake:** (See Figure 3.) Located on the left side of the traction unit. The handle is an overcenter lever which applies the drum brakes on the drive wheels when the handle is pulled to the rear. The brake must be engaged in order to start the engine.
6. **Deck Lift Handle:** (See Figure 3.) Located on the panel in front of the seat. Raise the mowing deck to the transport position, by pulling the handle to the rear and moving it upward for transport. To lower the mowing deck, pull the deck lift handle to the rear and lower it to the desired position.
7. **Fuel Shutoff Valve:** (See Figure 4.) Located on top of the fuel tank. When turned in a clockwise direction until it stops, it will shut off the flow of fuel to the engine. When turned in a counterclockwise direction it will open and allow fuel to flow to the engine. Close this valve if you are not going to run the mower for a period of 30 minutes or more to prevent flooding the engine.



Figure. 4

8. **Seat Adjustment Lever:** The Seat Adjustment Lever is located beneath the seat. The Seat Adjustment Lever is used to move the seat forward and backward. To place the seat in the desired position pull the seat adjustment lever to the left then push the seat forward or back to the desired position. Release the lever so the seat will lock in place.
9. **Digital Tachometer and Hour Meter (Optional):** (See Figure 1) Located on the right side of the mower behind the ignition switch. When the machine is running, the tachometer displays engine rpm. When the machine is off, the hour meter displays running time.

   Note: There will be a flashing “LUBE” for each recommended lubrication interval. There is a flashing “OIL” at each recommended engine oil and filter change.

10. **Choke Lever:** (See Figure 2) The Choke is integrated into the throttle control which is operated manually. Having the Choke in the ON (full forward) position helps the engine to start during initial start-up. During normal operation the Choke should be in the OFF (the detent for full throttle) position.

C. Initial Adjustments

1. Check the fluid levels and tires:

Note: These checks should be made daily, before starting the engine.

a. **Fuel:** Using a good grade of unleaded, regular gasoline, fill the fuel tank (beside the engine on the left side of the mower). When the fuel reaches one inch from the top of the tank, stop. DO NOT OVERFILL. Space must be left for expansion.

b. **Engine Oil:** (Filled at the factory before shipment.) Pull out the oil dipstick, wipe it off and reinsert it. Pull it out again and read the oil level. If it is below the operating range, add oil through the fill tube using a funnel to bring it up to the top of the operating range.

Note: Gasoline Engine: Use SAE 10W30 or SAE 10W40 engine oil, rated for service SJ.

c. **Hydraulic Oil:** (Filled at the factory before shipment.) The hydraulic oil is contained within the integrated hydrostatic transaxles and does not need to be checked or replaced.

d. **Tires:** 8-10 psi rear, 20-25 psi front caster tires

Note: New tires are overinflated in order to properly seat the bead to the rim. The normal working pressure for the traction tires is 8-10 psi. The front caster wheels should be inflated to 20-25 psi.

2. Check that all Nuts, Bolts and Screws are Tight.

3. Check the tension of the deck drive belts.

a. Remove the deck cover

b. The tension of the deck drive belts are maintained by a spring mechanism that adjusts for wear and stretch.

c. Examine the belts for cuts, fraying, and excessive wear. Replace if any of these are detected.

d. Replace the deck cover.

4. **Adjust the Mowing Deck:** The cutting height is set in 1/2” increments in the range of 1-1/2" to 4". Do not attempt to raise the mower deck higher than 4” because you will damage components on your mower. You may need to adjust the mowing deck to achieve the proper angle for mowing. Follow the procedures below to set the appropriate angle to the mowing deck.

a. Park the mower on a flat paved surface, engage the parking brake, shut off the engine, remove the key from the ignition switch, remove connection of the spark plugs and using the transport lever, lower the mowing deck into the cutting position.

b. Using a ruler, pencil and paper, measure and note the distance from the paved surface to the bottom edge of the mowing blade at the front and the back of the deck on each side of the mower. (Four dimensions.)

Note: The front edge of the mowing deck should be 1/8"-1/4" below the rear edge of the deck so that the blades are cutting grass in only the front half of their circular path. This decreases friction and reduces the drive power required.

c. If the dimension at the front of the mowing deck is 1/8"-1/4" lower than the dimension at the rear of the deck (pitch) on each side of the mower, do not adjust. If not, you will need to adjust the Deck Front Links (See Figure 5).

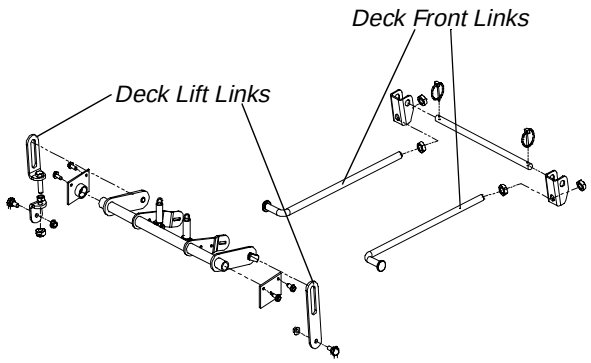

Figure. 5

d. Lower the mower deck to the cutting position. With a wrench, loosen the inner rear nuts on the Deck Front Links adjust the deck up or down, use a wrench and with a few turns, adjust clockwise or counter clockwise the outer rear nut of the Deck Front Links. Repeat this procedure on the opposite side of the Mower. Once the deck is adjusted, retighten bolts.

e. With the deck still in the cutting position, adjust the level (side to side). With a wrench loosen the top inner nut of the left side of the Deck Lift link. To adjust the side of the deck up or down turn the lower nut clockwise or counter clockwise a few turns. Retighten nuts.

f. Raise the mowing deck to the transport position using the transport lever.

g. Use the transport lever to lower the mowing deck to the cutting position and repeat

step “b.” above to make sure that the desired cutting height and pitch and level have been attained. If the dimensions are not correct, repeat steps “c.” through “f.” above.

5. **Lubricate all fittings listed in the maintenance section.**

D. Zero Turn Break-In And Operating Procedures

⚠ DANGER:

Reread the “When Mowing” Safety Precautions.

The following procedures are suggested for operators of ride-on machines which have zero turn capabilities.

1. **Orientation:**
   a. Read the entire Operator’s Manual.
   b. Sit on the machine, adjust the seat fore-and-aft, then adjust the speed/directional (lap bar) controls (they can be adjusted fore-and-aft, as well as up-and-down — 9/16" wrench required).
   c. Become familiar with all of the machine controls, instrumentation, safety and instruction signs, and safety devices.
   d. Move (or have moved) the machine to a safe, level area with no obstructions including objects, pedestrians, and animals.
2. **Initial Operation:**
   a. Use protective equipment for eyes, hands, hearing, feet, legs, head and other areas of the body if needed — safety eye glasses, gloves, earplugs, boots, hats, etc.

⚠ WARNING:

Hearing Protection is required for all operator exposure exceeding two (2) hours.

   b. Ensure that the area is free of animals and bystanders, especially children!
   c. Survey the area where the equipment is to be used to make sure it is free of debris, sticks, stones, wires, bones, and other foreign objects which could cause injury to bystanders, damage to the machine, or damage to nearby facilities.
   d. Inspect the machine to make sure:
      1. All guards, shields (including mower chute deflector) are in their proper place, are secure, and are functional.
      2. That there are no spilled or leaking fuel or oil sources, nor loose fuel or hydraulic tank caps, hoses or fittings.
      3. That there are no loose or missing hardware nor any missing items.
      4. That no non-approved devices are installed.
      5. That all safety signs and decals are properly installed and legible.
   e. This is a one person machine, operator only! Riders are not permitted under any circumstance!
   f. To start the engine on the machine:
      1. Make sure the park brake is set to the “ON” position, both lap bars are in the neutral/start (opened-out) position, and the Power Take Off (PTO also referred to as blade control switch) is in the “off” (down) position.
      2. Move the choke and the engine speed control (throttle) forward to the end of the slot.
      3. Insert the ignition key, turn the switch toward the spring-loaded “Start” position, maintain the Start position until the engine begins to run, then release the switch (it will return to the “Run” position).
      4. Move the choke/speed control slowly by moving it rearward. If the engine is “cold”, the choke may need to be partially applied for a few minutes. Be sure to move the choke/throttle after the engine has “warmed up” to the detent.
   g. Check safety devices:
      1. With the park brake engaged, move one of the lap bars (speed/directional control) from the neutral/start position to the neutral position (out of the slot, toward the center of the machine) — the engine should stop running. Move the lap bars back to the neutral/start position and the engine should run.
      2. Repeat this procedure with the opposite side lap bars.
      3. With the park brake engaged and the lap bars in the neutral/start position, advance the engine speed control completely forward (Hi-idle), engage the PTO control switch (pull upward), then lift off the seat — the engine should stop running. Sit down and the engine should run. Turn off the PTO by pushing the control switch down.
   h. To drive in the FORWARD direction:
      1. Set the engine speed to 2000 to 2500 rpm (refer to optional tachometer on

right control panel). This must be increased to full speed (3525-3675 rpm) after becoming familiar with the machine.

2. Release the park brake.
3. Move both lap bars out of the neutral/start position to the neutral position (toward center of machine). Slowly, move both lap bars toward the front of the machine until the machine begins to move forward — release the lap bars and the machine should stop. The more that the lap bars are moved toward the front of the machine, the faster the machine will move in the forward direction. Release the lap bars and the machine should stop traveling forward. (This is a safety check, the normal procedure is for the operator to slowly bring the lap bars to the neutral position).
4. Do not advance the lap bars rapidly as this could cause turf defacement, loss of traction, and/or instability.
5. To turn, advance one lap bar ahead of the other and the machine will turn toward the opposite from the side that was advanced — I.E. to turn clockwise (to the Right), move the LEFT lap bar forward more than the right side, and to turn counter-clockwise (to the LEFT), move the RIGHT lap bar forward more than the left side. NOTE: If one lap bar is in the neutral position and the other is advanced, the turn side tire will not rotate and a “pivot turn” will be executed — turf defacement could occur (if on grass) as well as potential damages to the traction surface and the tire. If the lap bar on the turn side is not brought all the way to neutral, then the turn side tire will continue to rotate and a “U-turn” will be executed with a low potential for turf defacement as well as traction surface and tire damage.

i. To drive in the REVERSE direction:

1. Make sure no bystanders, animals, or objects are behind the machine. Look behind the machine, and use extreme care.
2. Slowly, move both lap bars toward the rear of the machine until the machine begins to move rearward. Release the lap bars and the machine should stop. The more the lap bars are moved toward the rear of the machine, the faster the machine will move in the reverse direction. Release the lap bars and the machine should stop traveling in reverse (this is a safety check, the normal procedure is for the operator to slowly bring the lap bars to the neutral position).
3. Do not move the lap bars rapidly as this could cause turf defacement and/or loss of traction.
4. To turn, move one lap bar ahead of the other and the machine will turn toward the same side that was moved — I.E., to turn counter-clockwise (to the LEFT), move the LEFT lap bar rearward more than the right side, and to turn clockwise (to the RIGHT), move the RIGHT lap bar rearward more than the left side. NOTE: If one lap bar is in the neutral position and the other is moved, the turn side tire will not rotate and a “pivot turn” will be executed. Turf defacement could occur (if on grass) as well as potential damages to the traction surface and the tire. If the lap bar on the turn side is not brought all the way to neutral, then the turn side tire will continue to rotate and a “U-turn” will be executed with a low potential for turf defacement as well as traction surface and tire damage.

j. To perform a “zero turn”:

1. Please note, a zero turn maneuver can not be executed while the machine is moving in the forward or, reverse directions, the machine must come to a stop first.
2. To turn clockwise, slowly move the LEFT lap bar forward while simultaneously moving the RIGHT lap bar rearward. Release both lap bars and the machine should stop turning.
3. To turn counter-clockwise, slowly move the RIGHT lap bar forward while simultaneously moving the LEFT lap bar rearward. Release both lap bars and the machine should stop turning (this is a safety check, the normal procedure is for the operator to slowly bring the lap bars to the neutral position).

3. Start the Engine:

a. Open the fuel shutoff valve.
b. Sit on the Seat. Set the parking brake “On”.
c. Move the left and right steering levers to the neutral, opened-out position.
d. Turn the electric blade clutch switch “Off”.
e. Push the choke/throttle control to the full forward position.
f. Insert the key in the ignition and start switch and turn the switch to “On”.

g. Turn the ignition key in a clockwise direction to the “Start” position until the engine starts.

Note: Do not hold the key in the “Start” position for more than 10 seconds or you may damage the starter. If the engine does not start in this time, wait about 30 seconds and try again.

h. Gasoline Engine: Once the engine starts, move the choke/throttle to the detent as the engine warms.

4. **Operating the Mower:** Operating a zero-turning-radius mower is not like operating a tractor-type riding mower. The zero-turning-radius mower is much more maneuverable and much less fatiguing to operate. However, getting used to the fingertip control of the zero-turning-radius mower takes some practice. We strongly recommend that you locate a “test area” where you can operate the mower for about 30 minutes without being disturbed.
   a. Get into the operator’s seat.
   b. Start the engine.
   c. Use the transport lever to raise the mowing deck to the transport position. Make sure the blade clutch switch is off.
   d. After the engine has warmed, adjust the throttle to the fast position.
   e. Release the parking brake.
   f. Fold in the steering levers to the operating position.

⚠ WARNING:

When operating this mower forward, do not allow the steering levers to return to the neutral position on their own. Always maintain a firm grip on the steering levers, operate them smoothly and avoid any sudden movements of the levers when starting or stopping.

   g. To go forward, move both steering levers slightly forward and the mower will slowly move forward. The farther you move the levers forward the faster the mower will go forward.
   h. To back up, move both steering levers slightly backward and the mower will slowly move backward. The farther you move the levers backward the faster the mower will go backward.
   i. To turn, pull the lever back on the side to which you want to turn. The farther back you pull the lever, the faster and more sharply you will turn. Initially, you will have to be careful to avoid turning too fast and too far.
   j. After you have mastered operating the mower, use the transport lever to lower the mowing deck to the cutting position and pull on the electric blade clutch switch to start the blades rotating.
   k. Practice mowing in straight passes. When you feel confident, slowly practice mowing around obstacles such as trees.

5. **Parking the Mower:**
   a. Push off the electric blade clutch switch.
   b. Use the Deck Lift Handle to raise the mowing deck to the transport position.
   c. Drive the mower to the cleanup or storage area.
   d. Move the throttle to slow.
   e. Place the steering levers in the neutral position.
   f. Set the parking brake.
   g. Turn off the ignition switch and take the key from the switch.
   h. Close the fuel shutoff valves.

MAINTENANCE AND SERVICE

⚠ WARNING:

Disconnect the spark plug wires or remove the key from the ignition to prevent the engine from accidentally starting before performing any maintenance on this mower.

A. Mower Deck

1. **Removing the Mower Deck:**
   a. Apply the parking brake. Remove ignition key and both spark plug caps.
   b. Lower the cutter deck to the ground. Capture the lift handle by placing the height of cut clevis pin above the lift handle.
   c. Remove tension of the PTO belt by moving the belt tensioning rod.

Note: There is a certain amount of spring tension due to the weight of the deck. When removing the lift linkage from the deck the tension of the springs will go from the deck to the lift handle. Not capturing the lift handle while removing the lift linkage from the deck will cause it to snap back.

   d. Detach the mower drive belt.

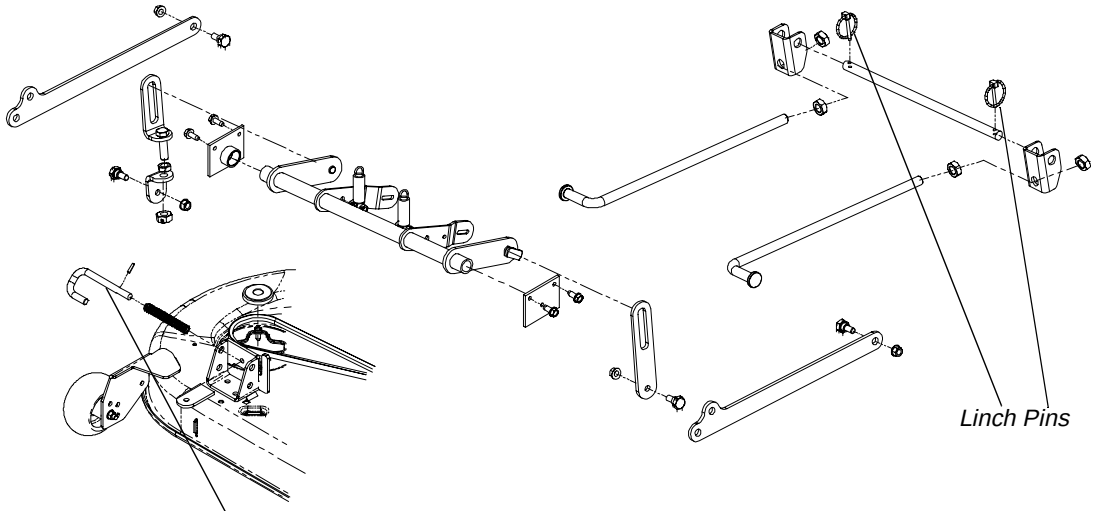

Figure. 6

e. Remove two linchpins (See Fig. 6) from the front of the mower. Pull the two (2) spring-loaded "J" pins on the left and right rear side of the cutter deck.
f. Turn front caster wheels outward.
g. Shift the deck toward the ignition switch side of the mower and remove.
h. To install reverse the process.

2. Changing a Blade:

a. Remove the key from the ignition and disconnect the spark plugs.
b. Jack up the front of the mowing deck about one foot and block it in that position.
c. Wrap a rag around one end of the blade and grasp it to prevent it from turning, or secure the blade by placing a block of wood between the blade and the deck housing.
d. Use a 1-1/8" socket wrench on the pulley side of the spindle bolt.
e. Remove the hex nut at the blade using a 1-1/8" wrench.
f. Remove the blade.
g. To replace the blade reverse the above process and tighten nut to 100-120 lb ft.

⚠ WARNING:

Never mow with dull blades! Blades that are bent should be replaced! The cutting blades are sharp and can cause severe injury. Wrap the cutting surface of the blade with a rag to avoid injury.

3. Sharpening the Blade:

a. Set the parking brake.
b. Clean any debris from the blades. Keep blades sharp and free of build up at all times.
c. Sharpen blades evenly at the original 30° angle to maintain balanced cutting blades. Do not sharpen the underside of the blades. Use a electric blade sharpener, a conventional electric grinder or a hand file to sharpen the blades.
d. Replace any blade with severe nicks or dents that cannot be removed by filing.
e. Check the balance of the blade after sharpening by placing it on a blade balancer. Do not use un-balanced blades.
f. If the blade dips on one end, file stock off of the cutting surface on that end.

Note: Blades that cannot be easily balanced—REPLACE.

4. Changing the Blade Drive Belts:

a. Set the parking brake. Remove ignition key and both spark plug caps.
b. Unscrew the wing nuts from the deck covers and remove both covers.
c. Using a 3/8" socket breaker bar or socket ratchet insert the drive end into the 3/8" square opening in the lower idler arm assembly and push the idler arm counterclockwise. While holding the idler arm back, loosen the blade drive belt from the pulley and slide the belt away from the pulley.
d. Remove tension of the PTO belt by moving the belt tensioning rod. Loosen the belt retaining bolt.
e. Pull the tensioner pulley away from the belt and remove the PTO belt then remove the blade drive belt.
f. Reverse the process to install the belt.

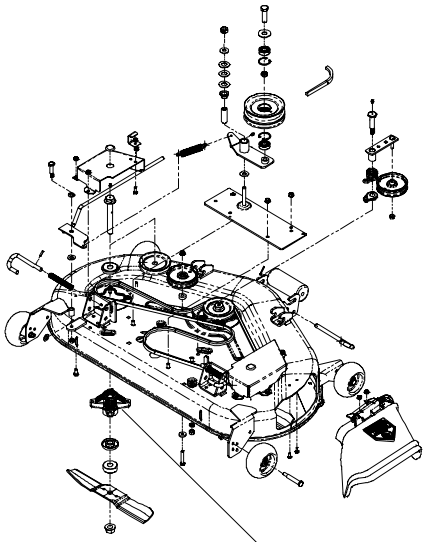

Figure.7

Note: When replacing belts do not overtighten. Adjust the idler pulley so that a ten-pound pull with a spring scale between two pulleys deflects the belt about 1/2".

5. Changing the Spindle Assembly

a. Jack up the front of the mowing deck about one foot and block it in that position.
b. Make sure the blade clutch is disengaged.
c. Remove the deck cover.
d. Remove the drive belts. (See 3. Changing Blade Drive Belts.)
e. Remove the cutter blade. (See 2. Changing a Blade.)
f. Using a wrench or socket ratchet remove four hex nuts, and the four hex head cap screws. Remove the spindle assembly.
g. Reverse the process to install the spindle assembly.

B.Hydrostatic Dive System

1. Your zero turn riding mower is equipped with dual integrated hydrostatic pumps, motors, and planetary gear reduction transaxles that are sealed and do not require service, maintenance, or adjustments**.**

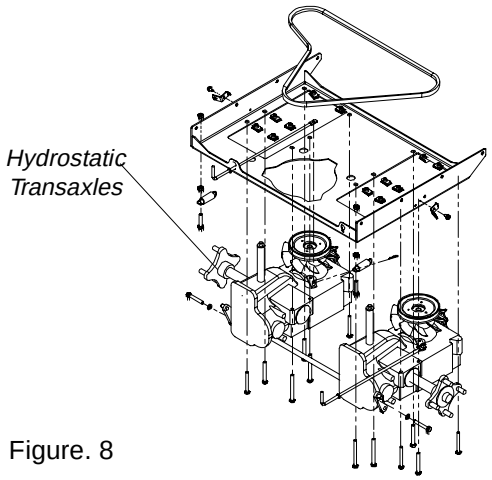

Figure. 8

C.Electrical Circuit

⚠ Danger:

Read General Safety Precautions Nos. 9 and 10.

1. **Battery:** The battery is located beneath the operator's seat. If so equipped, remove the fillcaps and check the level of the liquid electrolyte in the battery every 50 operating hours. If the level in any of the six cells has dropped below the bottom of the split ring inside the fill hole, refill the cell with distilled water. To keep the outside of the battery clean, brush on a strong solution of bicarbonate of soda and water and rinse with clean water. Keep the contacts and cable ends clean with a wire brush and make sure the connections are tight. Coat the terminals with petroleum jelly to prevent corrosion.

2. Battery Removal

⚠ Warning:

When removing the cables from the battery follow these steps to avoid a short between the wrench and the frame.

a. Remove the negative (black) cable.
b. Remove the positive (red) cable.
c. Release the hold down straps.
d. Remove the battery without tipping.

3. **Battery Storage:** When storing the mower for long periods of time the following guidelines should be performed.

a. Disconnect the battery cables from the terminals and remove the battery.
b. Clean the battery before storing. A dirty battery will lose its charge over time.

c. Store the battery with a full charge. A discharged battery will freeze (refer to the table below).

Specific Gravity	Freezing Temp (°F)
1.265	-71
1.250	-62
1.200	-16
1.150	5
1.100	16

d. Recharge battery when ever the specific gravity value is less than 1.225

4. Installing the Battery

Note: The battery is delivered from the factory fully charged and filled with electrolyte.

a. Attach the positive (red) cable.
b. Attach the negative (black) cable.
c. Attach the rubber battery strap.

5. Jump Starting

Warning:

Failure to use this starting procedure can cause sparking, and the gases in the battery to explode.

a. Attach the end of the red jumper cable to the positive terminal (+) of the charged battery.
b. Attach the other end of the red jumper cable to the positive terminal (+) of the low charge battery.
c. Attach the end of the black jumper cable to the negative terminal of the charged battery.
d. Attach the other end of the black jumper cable to the frame of the unit with the low charge battery.

6. **Fuses:** There is one fuse located in the wiring between the ignition and start switch and other electrical components. This is a standard plug-in type automotive fuse rated at 7.5 amp.
7. **Safety Switches:** There are seven safety switches in the electrical circuit which control the engine. They are (1) the blade clutch switch, (2) the parking brake switch, (3) the left and (4) the right steering lever switches, (5) the seat switch, (6 and 7) the no cut in reverse switches.They operate so that in order to start the engine, the blade clutch switch must be off, the parking brake must be engaged, and both steering levers must be opened-out to the side in the neutral position. Once the engine is started, the seat must be occupied and the parking brake must be released before either of the steering levers is folded up to the operating position or the engine's electronic ignition will be grounded out and the engine will stop. Also, the seat must be occupied before the blade clutch switch can cause the blades to rotate.
8. **Safety Switch Operation Checks:** The following operational checks should be made daily.
   a. **Blade Clutch Switch:** Sit in the operator's seat. With both steering levers opened-out in the neutral position and the parking brake engaged, turn the blade clutch switch "on" and try to start the engine. The engine should not start. If it does, the blade clutch switch must be replaced. If the engine does not start, turn the blade clutch switch "off" and start the engine. Now turn the blade clutch switch "on" and the blades should rotate. If the blades do not turn, the blade clutch switch must be replaced, the seat switch must be replaced or the electric PTO clutch must be repaired. The air-gap should be checked every 200 hrs. (or less, if severe operating conditions exist such as when there are many on/off cycles, mulching operations, material collection systems used, and dusty/dirty conditions), and the air-gap adjusted if more than 0.035". To inspect, remove the "negative" cable from the battery and all spark-plug wires. The air-gap should be checked with feeler gages in the three slots of the BBC. The air-gap should be adjusted to 0.013" to 0.015". There are three inspection slots I the brake cover. To adjust, successively tighten each of the three gap adjustment nuts an equal amount. Insert a feeler gage (0.013" to 0.015") into each slot as the air gap adjustment nut are tightened. The correct adjustment occurs when slight contact with the feeler gage occurs. Engage the BBC a couple of times, and recheck the air-gap. If it is not between 0.013" and 0.015", repeat the adjustment procedure.
   b. **Parking Brake Switch:** Sit in the operator's seat. With both steering levers opened-out in the neutral position and the blade clutch switch "off", release the parking brake and try to start the engine. The engine should not start. If it does, the park-

ing brake switch must be repositioned or perhaps replaced. If the engine does not start, engage the parking brake and start the engine. Swing one steering lever up to the operating position and the engine should stop. If the engine does not stop, the parking brake switch must be repositioned or replaced.

c. **Left and Right Steering Lever Switches:** Sit in the operator's seat. With both steering levers opened-out in the neutral position, the parking brake engaged and the blade clutch switch "off", swing the left steering lever up to the operating position and try to start the engine. The engine should not start. If it does, the left steering lever switch must be repositioned or perhaps replaced. Open the left steering lever to the neutral position and swing the right steering lever up to the operating position and try to start the engine. The engine should not start. If it does, the right steering lever switch must be repositioned or perhaps replaced. If the engine does not start, open the right steering lever to the neutral position and start the engine. Swing the left steering lever up to the operating position and the engine should stop. If the engine does not stop, the left steering lever switch must be repositioned or replaced. Open the left steering lever out to the neutral position and start the engine. Swing the right steering lever up to the operating position and the engine should stop. If the engine does not stop, the right steering lever switch must be repositioned or replaced.

d. **Seat Switch:** With both steering levers opened-out to the neutral position, the parking brake engaged and the blade clutch switch in the "off" position, start the engine. Now release the parking brake, hold down on the back of the operator's seat against spring pressure, and swing one of the steering levers up to the operating position. Release the operator's seat and the engine should stop. If the engine does not stop, the seat switch must be replaced. With both steering levers folded out in the neutral position, the parking brake engaged and the blade clutch switch in the "off" position, sit in the operator's seat and start the engine. Turn the blade clutch switch to the "on" position and the blades should start to rotate. Raise up slightly off the operator's seat and the blades should stop. If the blades do not stop when you dismount from the operator's seat, the seat switch must be replaced.

e. **Electric PTO Clutch:** This clutch operates when the engine is running, the operator is in the operator's seat and the blade clutch switch is turned on. This electric clutch is a fairly trouble free device. If a problem develops and the blades do not turn, first check the 20 amp fuse in the yellow, 16-gauge wire between terminal "L" on the ignition switch and the hour meter and then investigate the wiring harness and the connections to the seat switch, the blade clutch switch and the electric blade clutch. Then check the seat switch, the blade clutch switch and finally the electric blade clutch.

f. **No Cut in Reverse Switches:** When both speed/direction levers are moved past "neutral" to reverse the PTO Clutch will be deactivated and the mower blades will stop rotation. The PTO will be reactivated when one or both of the levers are moved back to "Neutral".

D.Tires

The two front wheels are caster wheels that are free to swivel to accommodate the direction of the mower.

The two rear wheels are used to propel the mower in the direction of input from the drive handles. Inflation pressure of the rear tires is important for stability while the mower is in operation. If the tire diameter is not equal between the two tires, the mower will pull to one side.

1. **Inflation Pressure:**
   a. Traction Tires—20 psi max; 8-10 psi recommended
   b. Front Caster Wheel—28 psi max; 20-25 psi recommended
   c. Cutting Deck Ball Wheels—Solid Polyurethane.

Use the Following guidelines for maintaining the tires:

   a. Balance inflation pressure between the rear tires to help maintain straight travel (see tire side wall for proper inflation pressure).
   b. Keep the valve caps tightened to prevent air pressure loss.

2. **Leaking Tires:** When a flat tire occurs, repair or replace immediately. The normal procedure is to remove the wheel and replace it. If a tire is getting soft, park the mower on the nearest

level, paved area. If the leaking tire is on a traction wheel, put blocks on each side of the opposite traction wheel and jack up the tire that leaks about an inch off the ground. Loosen and remove the lug nuts and remove the wheel. Mount a wheel and tire, replace the lug nuts, and using a torque wrench, tighten them to 60 ± 10 ft-lbs.

If the leaking tire is on a front caster wheel, block both traction wheels and raise the caster wheel so that the tire is an inch off the ground. Loosen and remove the locknut from the axle assembly and pull the axle assembly from the caster yoke. The wheel and two spacer sleeves will drop free. Slip the axle assembly through one side of the caster yoke, through a spacer sleeve, a wheel, the other spacer sleeve and finally through the other side of the caster yoke. Then tighten the locknut on the end of the axle assembly.

Lower the mower off the jack and continue mowing. The wheel with the leaking tire should be inflated to 20 psi and the wheel placed in a large bucket of water. Carefully inspect the tire, rim and valve for escaping air bubbles which indicate a leak. Mark each leak with a yellow marking crayon and then deflate the tire to 8 psi and repeat the inspection. If the leaks you find are pin hole size to 1/16" diameter, the tire can be repaired. If the leaks are larger than 1/16" diameter, the tire can be repaired. If the tire bead is damaged, the tire can be repaired or the tire will have to be replaced.

3. **Creeping:** Creeping is the slight forward or backward movement of the mower when the throttle is on and the lapbars are in the opened-out position. If your mower creeps do the following.
   a. Jack up rear of unit.
   b. Place Lapbars in neutral opened-out position.
   c. Locate jam nuts on transaxle control arms. (They are on the vertical linkage on the front of the transaxles)
   d. Loosen jam nuts on both ends of rod connectors.
   e. Start unit and push throttle all the way on.
   f. If unit creeps forward, rotate vertical rod links counter-clockwise. If unit creeps in reverse, rotate clockwise.

      Adjust the appropriate rod connector. The left rod for the left side of the mower and the right rod for the right side of mower. Afterward, retighten jam nuts.

E. Brakes

While the mower is in motion, all braking is performed dynamically through the hydraulic pumps and traction motors, controlled by the two steering levers. When the mower is parked with the engine shut off, the hydraulic system locks the traction wheels.

Note: To move the mower forward or in reverse by pushing, you must release the dynamic braking. Locate the release levers at the rear of the machine. Pull them toward the rear and lower the wide area of the rod into the keyhole slot. (See photo below).

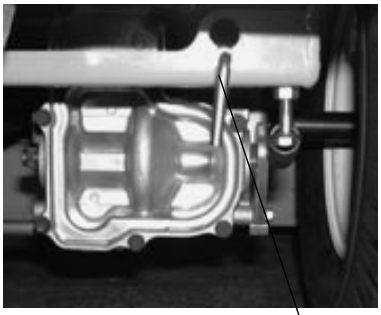

Hydro Release Valve

When the mower is parked with the engine running and the steering levers opened out in the neutral position, the parking brakes should be applied. The parking brakes are gear/pawl brakes mounted on each traction wheel. They are both engaged by the same operating lever.

1. **Adjustments:** The parking brake handle is a lever in a "j" slot that should engage with moderate force. The parking brakes provide a positive means to hold a machine stationary that is similar to "Park" on an automobile.

   Note: The parking brakes normally do not need to be adjusted.

To adjust either brake individually, loosen the jam nuts on the cable near the brake arm on the transaxle. Adjust the nuts so that the brake/pawl comes closer to the gear, but not in contact with the gear teeth.

2. **Repair:** The mower is equipped with external gear/pawl brakes and will not normally require maintenance. If they are not working properly, please contact your service center.

F. Hydraulic System

1. **Hydrostatic Pumps and Motors:** The pumps in the transaxles are the hardest-working components in the hydraulic system. They are in operation all the time the engine is running.

Because of extremely close tolerances, wear is an important factor in their life.

Note: The pumps and motors are not owner-repairable. If a pump fails, contact your Cub Cadet dealer. Do not disassemble the pump/motors.

2. **Steering Lever Adjustments:** Place the mower on level ground with the engine running, parking brake off and steering levers opened out to the neutral position. If the mower begins to creep, adjust the steering levers.

   If the mower creeps, first determine whether it creeps to the right or left side and which direction the mower moves — to the front or the rear. To make the adjustment, place the steering levers in the opened-out neutral position and set the parking brake, shutoff the engine, take the key from the ignition switch and pivot the seat forward. If the mower creeps to the right, you will adjust the linkage on the left side of the mower and vice-versa. Loosen the jam nut which prevents the linkage rod from turning. If the mower creeps forward, turn the linkage rod counterclockwise. If the mower creeps backward, turn the linkage rod clockwise. Then tighten the jam nuts.

G. Storage

1. **General:** If your mower will not be in service for a few months, it should be stored in a dry location that is not subject to drastic changes in temperature. Before storing, the following maintenance procedures should be performed.

   a. Clean the mower. The entire tractor and cutting deck should be washed and cleaned.
   b. Sharpen the blades so that the mower will be ready to use when needed.
   c. Protect the metal surfaces. Repair scratches with the appropriate touch-up spray paint. Brush a rust preventive oil on any unpainted surfaces including the pulleys and blades. (Be careful not to get any oil on the drive belts.)
   d. Lubricate the mower.
   e. Drain the engine oil. The engine should be warm so that all the oil drains. Replace the engine oil filter and refill the crankcase with fresh oil.
   f. Gasoline Engine: Drain all the fuel. Close the fuel tank shutoff valve. Disconnect the fuel line from the carburetor and put the end into an approved fuel container. Open the fuel tank shutoff valve and drain the fuel tank and line into the approved container. Replace the fuel line on the carburetor. Start the engine and allow it to run out of fuel. This will prevent gum and varnish deposits from forming. Replace the fuel filter.
   g. Gasoline Engine Only: Remove the spark plugs and pour approximately one ounce of oil into each cylinder. Crank the engine one or two turns to spread the oil evenly on the cylinder walls. Replace the spark plugs.
   h. Clean the battery and make sure it is fully charged.
   i. Jack the mower up and store it on blocks to take the weight off of the tires.

2. To Put the Mower Back in Service:

   a. Check the battery. Charge if necessary.
   b. Gasoline Engine Only: Remove the spark plugs and wipe them off. Using the starter, crank the engine to pump the excess oil out of the spark plug holes. Replace the spark plugs and the ignition leads. Refill the fuel tank with fresh gasoline.
   c. Check the level of the oil in the crankcase and the hydraulic tank.
   d. Lower the mower off the block and check the tire pressure.
   e. Push the mower outdoors and start the engine. Let the engine idle until it has warmed up completely (4 to 5 minutes).

MAINTENANCE SCHEDULE

A. Daily Checks

1. Before starting engine:

   a. Check the fuel level by viewing in the tank.
   b. Check the engine oil level.**
   c. Check the hydraulic transaxels for leaks.
   d. Check the tires and tire pressure.
      Drive Tires: 8-10 psi.
      Front Caster Wheels: 20-25 psi.
   e. Check the spindle belt, the mower drive belt and the hydro drive belt.
   f. Check the blades. Make sure they are sharp and that the blade securing cap screws are tight.
   g. Check the cutting height.

2. When ready to start the engine:

   a. Check the seven safety switches for proper operation.

3. After mowing:

   a. Clean the mower.
   b. Clean the engine air screen.

c. lubricate the wear points. Follow the Lubrication Chart.
d. After the first five hours, change the engine oil and engine oil filter.

B. Every 25 Hour Checks

1. Service the engine foam element air cleaner.*
2. Grease the three spindle bearings.

C. Every 50 Hour Checks

1. Change the engine oil. (Every 25 hours under heavy duty operation.)
2. Clean or replace the engine's paper air cleaner element.*
3. Check the battery's electrolyte level, if equipped with fill caps.
4. Clean the engine cooling fins and external surfaces.*
5. Lubricate wear points. **Follow the Oil Chart.**
6. Lubricate all grease fittings. **Follow the Lubrication Chart.**

D. Every 100 Hour Checks

1. Change the engine oil filter. (Every 50 hours under heavy duty operation.)
2. Check the engine spark plugs.

*** Perform maintenance more frequently under dusty conditions.**

****Reference Engine Owner's Manual**

.

OIL CHART

Apply a few drops of SAE 20W-50 engine oil, grease, or use a spray lubricant. Apply the oil to both sides of pivot points. Wipe off any excess. Start engine and operate mower briefly to insure that oil spreads evenly.

Number of Oil Points	*Description*
DAILY	
4	Deck Suspension Pivots
4	Height Adjustment Turnbuckle Clevis Pin
2	Height Adjustment Handle Pivots
2	Height Adjustment Stop Pivots
2	Deck Lift Linkage Pivots
2	Transport Handle Pivots
1	Transport Handle Pin
2	Deck Frame Up-and-Down Pivots
WEEKLY	
1	Seat Hinge
2	Steering Lever Linkage Rod End Bearings
2	Lever Return Assembly Rod End Bearings
2	Pump Control Lever Pivots
2	Grass Collection System Lid Hinges **(If Mower is so equipped)**

LUBRICATION CHART

Use a grease-gun filled with NO. 2 Multipurpose Lithium Base Grease

No. of Grease Fittings	*Description*
EVERY 25 HOURS	
3	Blade Spindle Bearings
WEEKLY	
2	Front Caster Wheels
2	Front Caster Wheel Spindles
4	Mowing Deck Pivots
2	Deck Take-Up Idler Pivots
2	Mower Deck Ball Wheels

Performance Adjustments

A. High Speed Tracking Adjustment

If mower tracks to one side with both lap bars in fully forward position:

1. Check air pressure in all four tires:
   a. Pressure should be within specified ranges and balanced side-to-side.
   b. Rear tires 8-10 psi recommended (20 psi MAX.)
   c. Front tires 20-25 psi recommended (28 psi MAX.
2. Verify that the mower does not creep when the engine is running, the lap bars are in the neutral position and the parking brake is released. (Refer to section D-3 on page 19 of this manual if this condition exists).
3. Recheck the tracking after any adjustments based on the above.
4. If uneven tracking persists, adjust as follows. (see Fig. 9)
   a. Unit tracks to the RIGHT, adjust Left lap bar stop bolt to make it longer.
   b. Unit tracks to the LEFT, adjust Right lap bar stop bolt to make it longer.
5. Re-check the tracking and make any fine tuning adjustments to the lap bar stop bolts as required.

Note: If stop bolt is adjusted too far, tracking problem will change sides. Make the fine tuning adjustments by shortening the same bolt.



Figure. 9

Lap Bar Stop Bolt

B. Engine RPM Check and Adjustment

Table 1

Description	High RPM Spec.	Low RPM Spec.
15 Hp Kawasaki	3600 +/-50	1550 +/-100
18 Hp Briggs & Stratton	3600 +/-50	1550 +/-100
NOTE: RPM Specs. are for free running engines under no load.		

1. Verify that the lap bars are in the neutral position, the parking brake is on, and the PTO drive is disengaged.
2. Start the mower and let it run at approximately half throttle for 3-5 minutes to bring the engine up to operating temperature.
3. Locate the (optional) Hour Meter/Tachometer/ Service Minder display on the right hand operator control panel if so equipped, or use a hand-held tachometer. (see Fig.1 on page 9 of the manual) This display defaults to the tachometer mode when engine is running.
4. Move the throttle lever to the high speed position and note the RPM reading on the display.
5. Move the throttle lever back to the low speed position and again note the displayed RPM's.
6. Compare these noted RPM readings to the specifications in Table 1, for the engine that is on your mower.
7. If the readings do not correspond to the ranges in the table, refer to the engine owner's manual for the proper adjustment procedures.
8. If adjustments per the engine operator's manual do not result in proper RPM readings, contact your service technician.
9. Note: The throttle cable sheath may shrink or slip over time, changing the relationship between the throttle lever on the left hand operator control panel and the throttle arm on the engine. To readjust the throttle cable:
   a. Make sure the engine is off, place lap bars in the neutral position, set the parking brake, and disconnect and ground both of the spark plug wires.
   b. Locate and loosen the cable clamp on the engine throttle plate.
   c. Place the operator's throttle lever to the high speed position and then slide the cable through the clamp until the throttle arm is in the full throttle position. (ref. engine owner's manual)
   d. Tighten the cable clamp.
   e. Move the operator's throttle lever between high and low speed and verify that the engine throttle arm also moves through it's full range of motion.
   f. Repeat as required to obtain proper throttle adjustment.

g. Verify proper throttle adjustment by checking RPM readings as outlined above.

C. Deck Corner Ball Wheel Roller Settings

1. Matching the set heights of the ball rollers on the four corners of the mower deck to the desired cut height will prevent edge scalping and minimize any side-to-side variance in cut height.
2. There are five height adjustment holes in the bracket that mount the ball rollers to the deck.
   a. Use the top set of holes for cut heights of 1-1/2 inches or lower.
   b. Use the middle set of holes for a 2-1/2 - 3-1/2 inch cut height.
   c. Use the bottom set of holes for cut heights of 4 inches or higher.

D. Deck Center Anti-Scalp Roller

1. The front roller helps prevent the scalping of high spots and uneven terrain across the center section of the deck.
2. The roller on the front of the deck is fixed at the factory and can not be adjusted.

E. Lap Bar Adjustment

1. Proper lap bar and seat adjustment will result in the following:
   a. In the neutral position with hands on the lap bars,
      1. Operator's upper arms should be relaxed and approximately vertical.
      2. Operator's forearms should be approximately horizontal.
   b. In the full forward position,
      1. Operator's back should stay in contact with the seat back.
      2. Lap bars should not contact operator's legs.
   c. In the full reverse position,
      1. Lap bars should not contact the operator's legs or torso.
2. Set the seat to the preferred operating position.
   a. Adjustment lever is located under the front edge of the seat.
   b. The seat has five inches of front-to-rear adjustment available.
3. Check factory settings of lap bars for the conditions listed above.

   Note: If lap bar adjustments are required, height adjustments should be made prior to angular adjustments.

4. To adjust the height of the lap bars,
   a. Remove the nuts from the lap bar mounting bolts (see Fig. 10).
   b. Remove the bolts and lap bar and reposition to the second set of holes in the mounting block.
   c. Replace the bolts and nuts, and tighten to 28-34 ft-lbs.
      1. If angular adjustments are also required, nuts can be tightened until snug at this point.
   d. The same adjustments should be made to both sides of the mower.
5. To adjust the front-to-rear angle of the lap bars,
   a. Loosen the nuts on the lap bar mounting bolts, leaving the bottom one fairly snug.
   b. The top hole is slotted, allowing the lap bar to pivot on the bottom bolt.
   c. Move lap bar to the desired angle and tighten the nuts to 28-34 ft-lbs.

   Note: In the neutral position, the handles of the lap bars should be aligned with approximately a one inch gap between the tips. Widen the gap by adding shim washers to the top mounting bolt between the lap bar and the mounting block.

   d. Check the results of any adjustments to the conditions described in section a, above. Repeat any adjustment procedures as required until all conditions are met.



Figure. 10 *Lap Bar Mounting Bolt and Nuts*

F.Deck leveling Procedure

1. Park the mower on a flat paved surface, engage the parking brake, shut off the engine, remove the key from the ignition switch, disconnect the spark plug wires and using the transport lever, position the mowing deck into the 4" height of cut (top) position. (The 4" height of cut position is recommended in order for one to see and obtain a measurement. Any height of cut position is acceptable as long as a proper measurement can be taken.)
2. Check the right and left front tire pressure. Adjust as necessary to 20-25 psi. Tire pressure can affect blade height by as much as a 1/4".

3. Check the right and left rear Drive tire pressure. Adjust as necessary to 8-10 psi.
4. Measure blade-to-ground height at the front tip of the right blade. To obtain an accurate measure, align blades in parallel with mower centerline, (i.e. front to back).
5. Measure blade-to-ground height at the front tip of the left blade. Be sure to measure at the blade tip with the blades arranged in proper position.
6. To level the deck, (side to side) adjust the threaded link at the left side of the deck (Point B) so that the blade-to-ground height at the right front blade tip matches that of the left front blade tip. This is done by loosening the jam nuts on the threaded link and tightening the lower nut to raise the deck and loosening the nut to lower the deck.
7. Measure the blade-to-ground height at the right rear blade tip. Again be sure to measure at the blade tip at the rear of the right blade when aligned along the mower centerline. The blade-to-ground height at the rear of the blade tip should be 1/8" to 1/4" higher than the front tip. This is referred to as blade pitch. The same height difference should be true for the left blade, measured front and back.
8. To adjust the blade pitch, the deck pitch must be adjusted. Loosen the inner jam nuts at the rear of the horizontal threaded links. Start at Point C to raise the rear of the deck, tighten the front outer jam nut to raise the front of the deck. Adjust the rear jam nut at Point C to take the slack out of the threaded link.
9. The final adjustment would be to take the "slack" out of the front linkage (Point C) by adjusting the jam nuts on the threaded link. Loosen the jam nuts and tighten the inner nut to remove "slack".
10. In many cases it will be necessary to adjust deck height using both eyebolt adjustments and pitch adjustment to achieve the correct blade-to-ground heights. If you remember that the front right blade tip adjustment is fixed and you level to that height, adjusting the decks will be simplified.

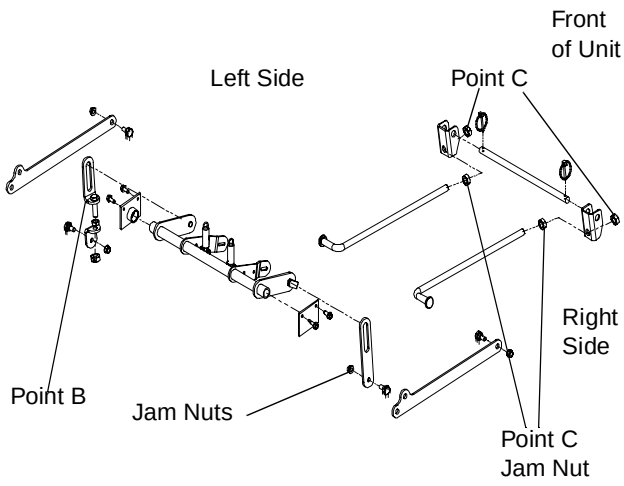

Figure. 11

WIRING DIAGRAM

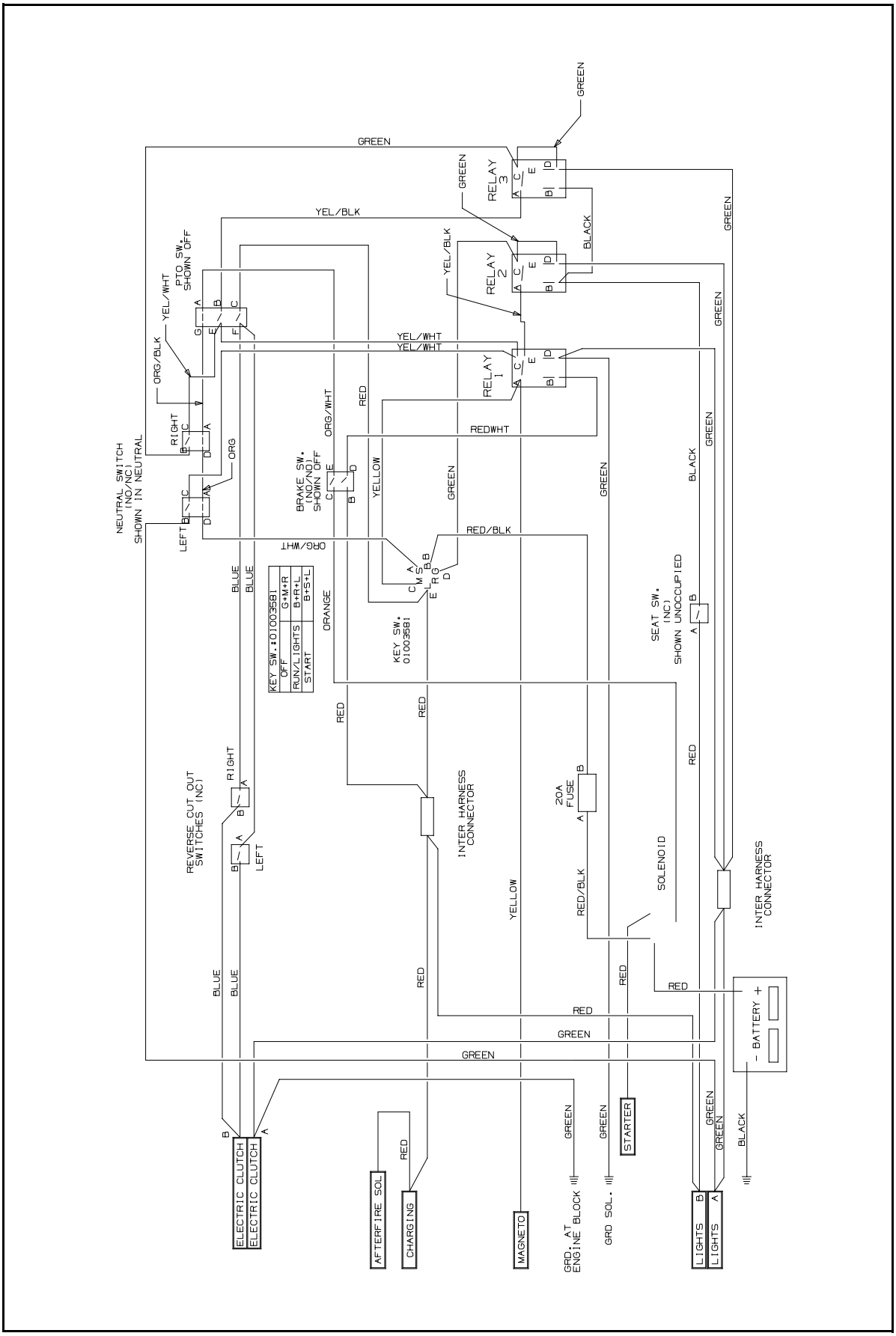

USE THIS PAGE AS A GUIDE TO DETERMINE SLOPES WHERE YOU MAY NOT OPERATE SAFELY.

SLOPE GAUGE

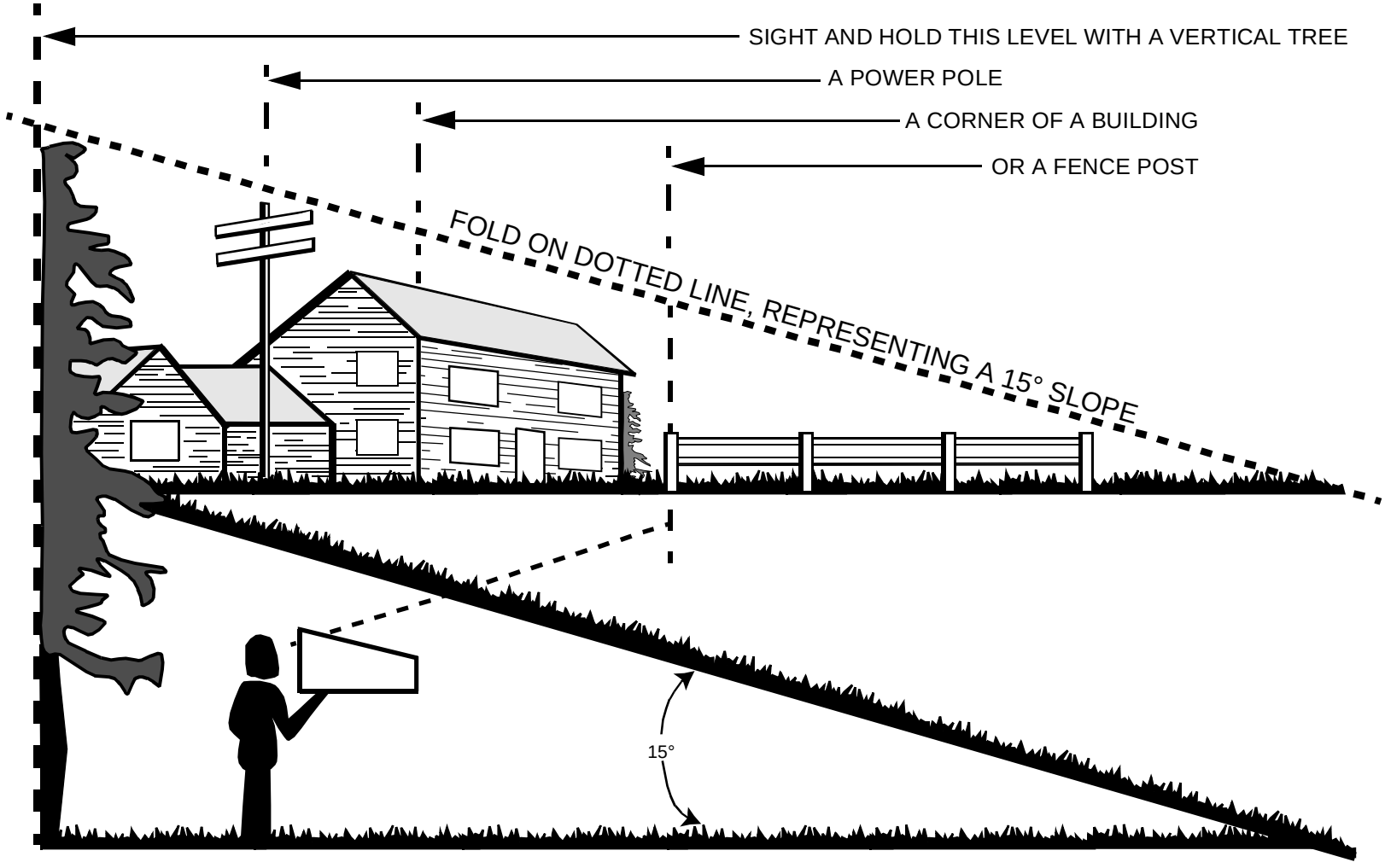

WARNING

Do not mow on inclines with a slope in excess of 15 degrees (a rise of approximately 2-1/2 feet every 10 feet). A riding mower could overturn and cause serious injury. If operating a walk-behind mower on such a slope, it is extremely difficult to maintain your footing and you could slip, resulting in serious injury.

Operate RIDING mowers up and down slopes, never across the face of slopes.

Operate WALK-BEHIND mowers across the face of slopes, never up and down slopes.

MANUFACTURER'S LIMITED WARRANTY FOR:



TWO-YEAR RESIDENTIAL
ONE-YEAR COMMERCIAL

Proper maintenance of your Cub Cadet equipment is the owner's responsibility. Follow the instructions in your operator's manual for correct lubricants and maintenance schedule. Your Cub Cadet dealer carries a complete line of quality lubricants and filters for your equipment's engine, transmission, chassis and attachments.

Riding mowers, lawn tractors, garden tractors, utility vehicles, Cub Cadet attachments and home maintenance products

This limited warranty for residential users, covers any defect in materials or workmanship in your Cub Cadet equipment for two years from the date of purchase for the first user purchaser. We will replace or repair any part or parts without charge through your authorized Cub Cadet dealer.

Batteries have a one-year prorated limited warranty with 100% replacement during the first three months.

V-belts for either the traction drive or any attachments are covered for one year only.

Cub Cadet equipment used commercially is warranted for one year only.

(Commercial use is defined as either having hired operators or used for income producing purposes.)

Items not covered

The warranty does not cover routine maintenance items such as lubricants, filters (oil, fuel, air and hydraulic), cleaning, tune-ups, brake and/or clutch inspection, adjustments made as part of normal maintenance, blade sharpening, set-up, abuse, accidents and normal wear. It does not cover incidental costs such as transporting your equipment to and from the dealer, telephone charges or renting a product temporarily to replace a warranted product.

There is no other express warranty.

How to obtain service

Contact your authorized Cub Cadet servicing dealer who sold you your Cub Cadet equipment. If this dealer is not available, see the Consumer Yellow Pages under "lawn mowers" for the name of a dealer near you.

If you need further assistance in finding an authorized Cub Cadet servicing dealer, contact:

Cub Cadet LLC
Post Office Box 361131
Cleveland, Ohio 44136-0119
Phone: 877-282-8684

How does state law apply?

This limited warranty gives you specific legal rights, and you may also have other rights which vary from state to state.