Cub Cadet

OPERATOR'S MANUAL

33" Model Shown

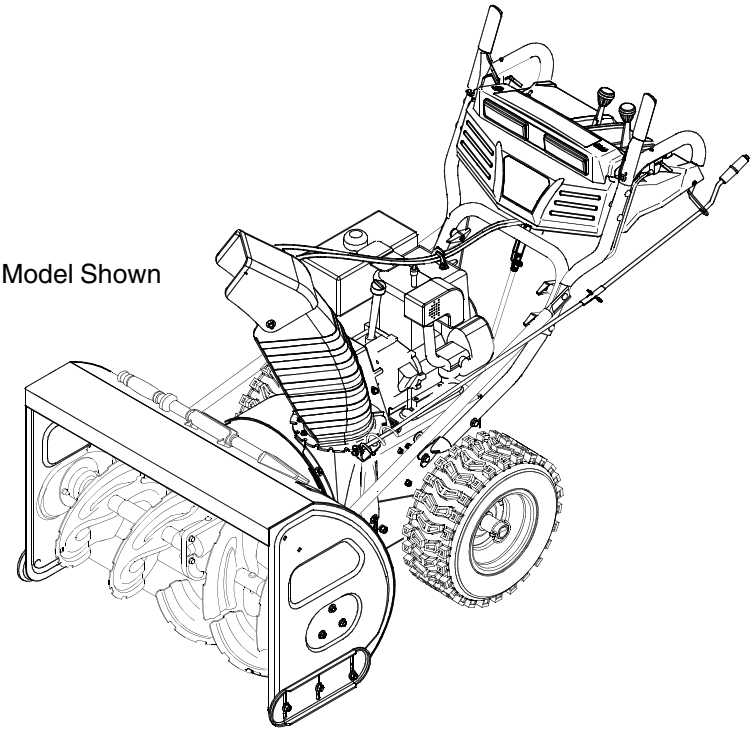

Two Stage
Snow Thrower

28" Snow Thrower — Model 928 SWE
33" Snow Thrower — Model 933 SWE
45" Snow Thrower — Model 945 SWE

IMPORTANT: Read safety rules and instructions carefully before operating equipment

Warning: This unit is equipped with an internal combustion engine and should not be used on or near any unimproved forest-covered, brush-covered or grass-covered land unless the engine's exhaust system is equipped with a spark arrester meeting applicable local or state laws (if any). If a spark arrester is used, it should be maintained in effective working order by the operator. In the State of California the above is required by law (Section 4442 of the California Public Resources Code). Other states may have similar laws. Federal laws apply on federal lands. A spark arrester for the muffler is available through your nearest engine authorized service dealer or contact the service department, P.O. Box 361131 Cleveland, Ohio 44136-0019.

CUB CADET LLC P.O. BOX 361131 CLEVELAND, OHIO 44136-0019 [www.cubcadet.com]

PRINTED IN U.S.A.

FORM NO. 769-01792
(7/05)

TABLE OF CONTENTS

Content	Page	Content	Page
Customer Support	2	Servicing Your Snow Thrower	15
Important Safe Operation Practices	3	Off-Season Storage	18
Assembling Your Snow Thrower	5	Trouble Shooting	19
Knowing Your Snow Thrower	8	Illustrated Parts List	20
Operating Your Snow Thrower	9	Commercial Warranty	31
Making Adjustments	11	Residential Warranty	32
Maintaining Your Snow Thrower	13		

FINDING MODEL NUMBER

This Operator's Manual is an important part of your new snow thrower. It will help you to assemble, prepare and maintain the unit for best performance. Please read and understand what it says.



Before you start assembling your new snow thrower, please locate the model plate on the equipment and copy the information from it in the space provided below. The information on the model plate is very important if you need help from our Customer Support Department or an authorized dealer.

- You can locate the model number by standing behind the unit in the operating position and looking down at the dash panel . A sample model plate is explained below. For future reference, please copy the model number and the serial number of the equipment in the space below.

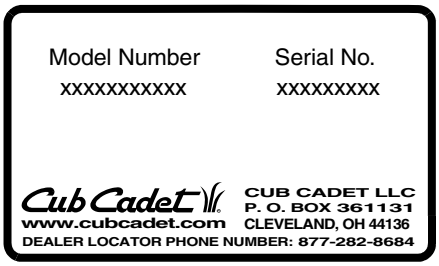

Copy the model number here: _____

Copy the serial number here: _____

ENGINE INFORMATION

The engine manufacturer is responsible for all engine-related issues with regards to performance, power-rating, specifications, warranty and service. Please refer to the engine manufacturer's Owner's/Operator's Manual packed separately with your unit for more information.

CALLING CUSTOMER SUPPORT



If you have difficulty assembling this product or have any questions regarding the controls, operation or maintenance of this unit, please call your Cub Cadet dealer. If you need assistance in locating a dealer in your area, contact the Customer Dealer Referral Line by calling:

1-877-282-8684

Or Contact Cub Cadet via the internet by logging on to our Wed Site at:

www.cubcadet.com

Please have your unit's model number and serial number ready when you call. See previous section to locate this

SECTION 1: IMPORTANT SAFE OPERATION PRACTICES

WARNING: This symbol points out important safety instructions which, if not followed, could endanger the personal safety and/or property of yourself and others. Read and follow all instructions in this manual before attempting to operate this machine. Failure to comply with these instructions may result in personal injury. When you see this symbol—**heed its warning**.

WARNING: Engine Exhaust, some of its constituents, and certain vehicle components contain or emit chemicals known to State of California to cause cancer and birth defects or other reproductive harm.

DANGER: This machine was built to be operated according to the rules for safe operation in this manual. As with any type of power equipment, carelessness or error on the part of the operator can result in serious injury. This machine is capable of amputating hands and feet and throwing objects. Failure to observe the following safety instructions could result in serious injury or death.

Training

1. Read, understand, and follow all instructions on the machine and in the manual(s) before attempting to assemble and operate. Keep this manual in a safe place for future and regular reference and for ordering replacement parts.
2. Be familiar with all controls and their proper operation. Know how to stop the machine and disengage them quickly.
3. Never allow children under 14 years old to operate this machine. Children 14 years old and over should read and understand the operation instructions and safety rules in this manual and should be trained and supervised by a parent.
4. Never allow adults to operate this machine without proper instruction.
5. Thrown objects can cause serious personal injury. Plan your snow throwing pattern to avoid discharge of material toward roads, bystanders and the like.
6. Keep bystanders, helpers, pets and children at least 75 feet from the machine while it is in operation. Stop machine if anyone enters the area.
7. Exercise caution to avoid slipping or falling, especially when operating in reverse.

Preparation

1. Thoroughly inspect the area where the equipment is to be used. Remove all door mats, newspapers, sleds, boards, wires and other foreign objects which could be tripped over or thrown by the auger/impeller.
2. Always wear safety glasses or eye shields during operation and while performing an adjustment or repair to protect your eyes. Thrown objects which ricochet can cause serious injury to the eyes.
3. Do not operate without wearing adequate winter outer garments. Do not wear jewelry, long scarves or other loose clothing which could become entangled in moving parts. Wear footwear which will improve footing on slippery surfaces.
4. Use a grounded extension cord and receptacle for all units with electric start engines.
5. Adjust collector housing height to clear gravel or crushed rock surfaces.
6. Disengage the control handle before starting the engine.
7. Never attempt to make any adjustments while engine is running, except where specifically recommended in the operator's manual.
8. Let engine and machine adjust to outdoor temperature before starting to clear snow.
9. To avoid personal injury or property damage use extreme care in handling gasoline. Gasoline is extremely flammable and the vapors are explosive. Serious personal injury can occur when gasoline is spilled on yourself or your clothes which can ignite. Wash your skin and change clothes immediately.
    a. Use only an approved gasoline container.
    b. Extinguish all cigarettes, cigars, pipes and other sources of ignition.
    c. Never fuel machine indoors.
    d. Never remove gas cap or add fuel while the engine is hot or running.
    e. Allow engine to cool at least two minutes before refueling.
    f. Never over fill fuel tank. Fill tank to no more than ½ inch below bottom of filler neck to provide space for fuel expansion.
    g. Replace gasoline cap and tighten securely.
    h. If gasoline is spilled, wipe it off the engine and equipment. Move machine to another area. Wait 5 minutes before starting the engine.
    i. Never store the machine or fuel container inside where there is an open flame, spark or pilot light (e.g. furnace, water heater, space heater, clothes dryer etc.).
    j. Allow machine to cool at least 5 minutes before storing.

Operation

1. Do not put hands or feet near rotating parts, in the auger housing or discharge chute. Contact with the rotating parts can amputate hands and feet.
2. The auger control handle is a safety device. Never bypass its operation. Doing so, makes the machine unsafe and may cause personal injury.
3. The control handle must operate easily in both directions and automatically return to the disengaged position when released.
4. Never operate with a missing or damaged discharge chute. Keep all safety devices in place and working.
5. Never run an engine indoors or in a poorly ventilated area. Engine exhaust contains carbon monoxide, an odorless and deadly gas.

6. Do not operate machine while under the influence of alcohol or drugs.
7. Muffler and engine become hot and can cause a burn. Do not touch.
8. Exercise extreme caution when operating on or crossing gravel surfaces. Stay alert for hidden hazards or traffic.
9. Exercise caution when changing direction and while operating on slopes.
10. Plan your snow throwing pattern to avoid discharge towards windows, walls, cars etc. To avoid property damage or personal injury caused by a ricochet.
11. Never direct discharge at children, bystanders and pets or allow anyone in front of the machine.
12. Do not overload machine capacity by attempting to clear snow at too fast of a rate.
13. Never operate this machine without good visibility or light. Always be sure of your footing and keep a firm hold on the handles. Walk, never run.
14. Disengage power to the auger/impeller when transporting or not in use.
15. Never operate machine at high transport speeds on slippery surfaces. Look down and behind and use care when in reverse.
16. If the machine should start to vibrate abnormally, stop the engine, disconnect the spark plug and ground it against the engine. Inspect thoroughly for damage. Repair any damage before starting and operating.
17. Disengage the control handle and stop engine before you leave the operating position (behind the handles). Wait until the auger comes to a complete stop before unclogging the discharge chute, making any adjustments, or inspections.
18. Never put your hand in the discharge or collector openings. Always use a clearing tool to unclog the discharge opening.
19. Use only attachments and accessories approved by the manufacturer.
20. If situations occur which are not covered in this manual, use care and good judgment. Call customer assistance for the name of your nearest servicing dealer.

Maintenance And Storage

1. Never tamper with safety devices. Check their proper operation regularly.
2. Disengage the control handle and stop engine. Wait until the auger/impeller come to a complete stop. Disconnect the spark plug wire and ground against the engine to prevent unintended starting before cleaning, repairing, or inspecting.
3. Check bolts, and screws for proper tightness at frequent intervals to keep the machine in safe working condition. Also, visually inspect machine for any damage.
4. Do not change the engine governor setting or over-speed the engine. The governor controls the maximum safe operating speed of the engine.
5. Snow thrower shave plates and skid shoes are subject to wear and damage. For your safety protection, frequently check all components and replace with original equipment manufacturer's (O.E.M.) parts only. "Use of parts which do not meet the original equipment specifications may lead to improper performance and compromise safety!"
6. Check controls periodically to verify they engage and disengage properly and adjust, if necessary. Refer to the adjustment section in this operator's manual for instructions.
7. Maintain or replace safety and instruction labels, as necessary.
8. Observe proper disposal laws and regulations for gas, oil, etc. to protect the environment.
9. Prior to storing, run machine a few minutes to clear snow from machine and prevent freeze up of auger/impeller.
10. Never store the machine or fuel container inside where there is an open flame, spark or pilot light such as a water heater, furnace, clothes dryer etc.
11. Always refer to the operator's manual for proper instructions on off-season storage.

Your Responsibility:

- Restrict the use of this power machine to persons who read, understand and follow the warnings and instructions in this manual and on the machine.

Safety Labels



At Front of Auger Housing



On Discharge Chute

SECTION 2: ASSEMBLING YOUR SNOW THROWER

NOTE: *This Operator's Manual covers several models.* ***Snow thrower features vary by model****. Not all features discussed in this manual are applicable to all snow thrower models.*

Unpacking

- Remove staples from the top, sides, and ends of the shipping crate.
- Set panels aside to avoid tire punctures or personal injury.
- Remove and discard plastic bag that covers unit.
- Roll the unit out of the crate.
- Check the crate thoroughly for loose parts before discarding.

Loose Parts

- The augers are secured to the auger shaft with four shear pins (six for 45"augers)and bow-tie cotter pins. If you hit a foreign object or ice jam, the snow thrower is designed so that the pins may shear. Two replacement shear pins and bow-tie cotter pins are provided for your convenience. See Figure 1. Store these safely until needed.

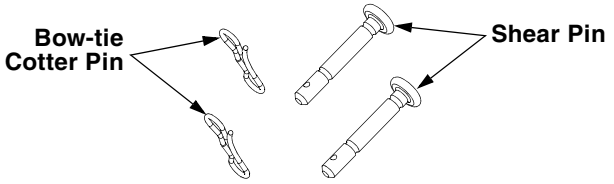

Figure 1

IMPORTANT: NEVER replace the auger shear pins with standard hex bolts. Any damage to the auger gearbox or other components from using standard bolts will not be covered by your snow thrower's warranty.

Items Required For Assembly

1. Pair of pliers
2. Engine oil
3. Fresh gasoline

Before Assembly

WARNING: Disconnect the spark plug wire and ground it against the engine to prevent unintended starting.

NOTE: *Reference to the right hand or left hand side of machine are observed from the operating position.*

Assembling Handle

- Remove the **lower** plastic wing nut, belleville washer and carriage bolt from each side of the lower handle. See Figure 2.
- Raise the upper handle assembly until it snaps over the lower handle.
- Looking beneath the handle panel, check that the cables (steering, auger, and drive) are properly routed and not pinched or kinked. Make certain the springs at the lower end of the auger and drive cables are securely hooked into their respective actuator bracket.

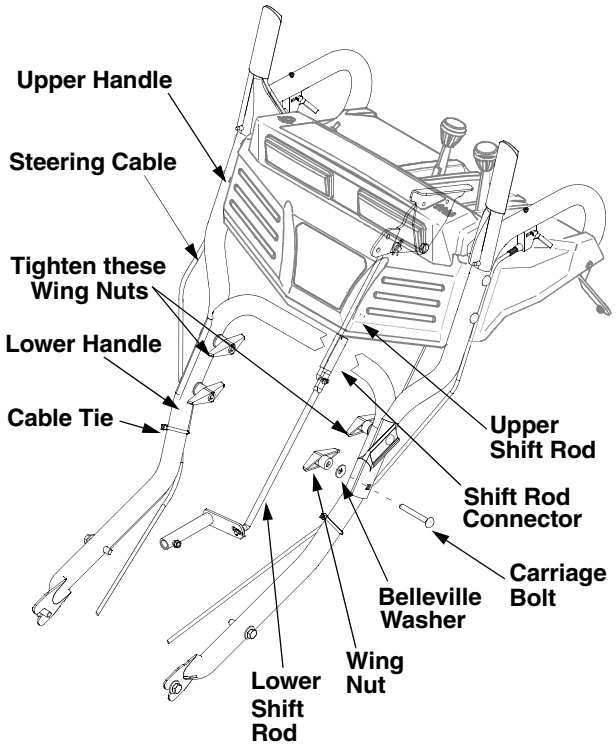

NOTE: Support Tubes are omitted from the illustration for clarity.

Figure 2

- Secure the upper handle and lower handle with the two plastic wing nuts, belleville washers and carriage bolts removed earlier.
- Tighten the two wing nuts already installed in the upper holes to firmly secure the upper handle and support tubes.
- Align the upper and lower shift rods, then slide the shift rod connector down over the end of the lower shift rod. Tap the connector until it **locks** over the lower shift rod. See Figure 2.

NOTE: *If the connector is not properly assembled, the shift rod will pivot and you will not be able to change speeds or direction.*

Attaching Chute Crank

- Remove the internal cotter pin from the upper chute crank. Slide the upper chute crank through the upper chute crank bracket and into the sleeve on the lower chute crank.
- Align the hole in the upper chute crank with the hole in the sleeve (If necessary, use a pair of pliers to assist in aligning holes). Insert the internal cotter pin through the holes to secure the chute crank. See Figure 3.

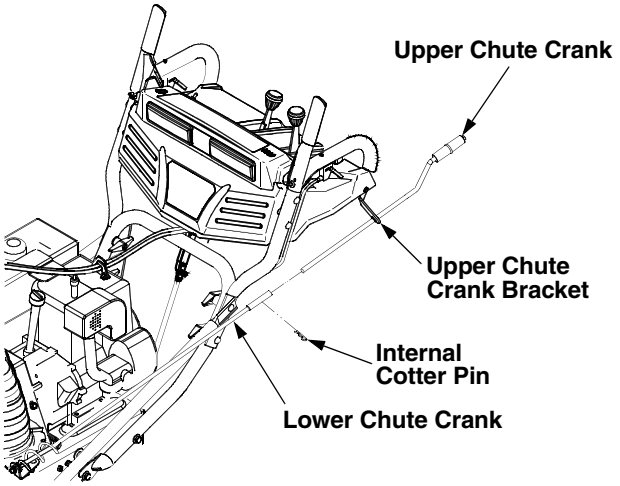

Figure 3

If not already done, slip the cables that run from the handle panel to the discharge chute into the cable guide located on top of the engine. See Figure 4.

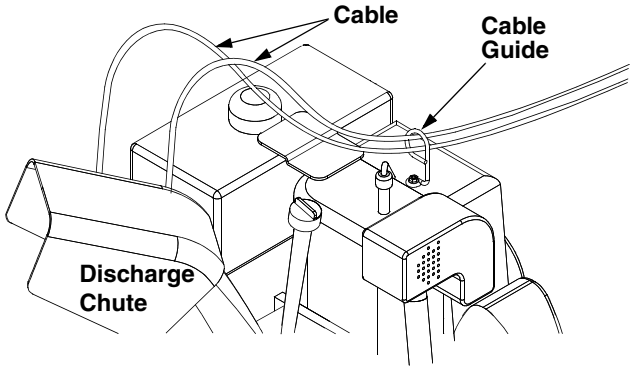

Figure 4

Wrap the wire of the head lamp wire harness down the right handle until the wire can be plugged into the engine alternator wire connector down on the engine. See Figure 5.

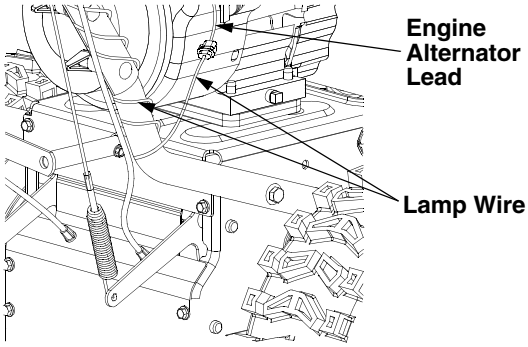

Figure 5

Normally the cable ties holding the steering cables against the handle are loosely installed on each side of the lower handle at the factory. Pull the cable ties tight to secure. Cut the excess from the ends of cable ties.

Final Assembly Adjustments

Make these final assembly adjustments **before** operating your snow thrower for the first time. Failure to follow these instructions may cause damage to the snow thrower.

To test the wheel drive and auger drive controls, Refer to Figure 6 and proceed as follows:

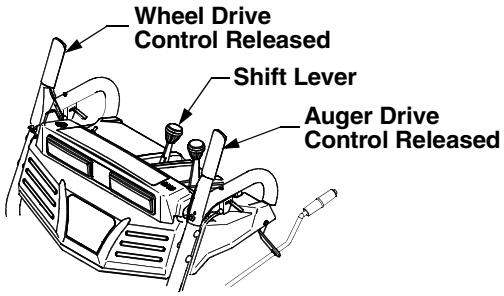

Figure 6

Testing Wheel Drive Control & Shift Lever

Perform the following test to determine need for adjustment:

- Move the shift lever into sixth (6) position. Refer to Figure 6.
- With the wheel drive control released, push the snow thrower forward, then pull it back. The machine should move freely.
- Engage the wheel drive control and attempt to move the machine both forward and back, resistance should be felt.
- Move the shift lever into the fast reverse (R2) position and repeat the previous two steps.

If you experienced resistance rolling the unit, either when repositioning the shift lever from 6 to R2 or when attempting to move the machine with the drive control released, adjust the drive control immediately. See *Adjusting Wheel Drive and Auger Drive Controls.*

Testing Auger Drive Control

Check the adjustment of the auger control as follows:

- When the auger control is released and in the disengaged "up" position, the cable should have very little slack, but should NOT be tight.

WARNING: Do not over-tighten the cable. Over-tightening may prevent the auger from disengaging and compromise the safety of the snow thrower.

- In a well-ventilated area, start the snow thrower engine as instructed on page 9. Make sure the throttle is set in the fast position.
- While standing in the operator's position (behind the snow thrower), engage the auger and allow the auger to remain engaged for approximately ten seconds before releasing the auger control. Repeat this several times.
- With the engine running in the fast position and the auger control lever in the disengaged "up" position, walk to the front of the machine.
- Confirm that the auger has completely stopped rotating and shows no signs of motion.

IMPORTANT: If the auger shows any signs of rotating, immediately return to the operator's position and shut off the engine. Wait for all moving parts to stop before readjusting the auger control cable.

Adjusting Wheel Drive and Auger Drive Controls

To readjust the control cables, refer to Figure 7 and Figure 8 and proceed as follows:

- From beneath the handle, pull downward on the appropriate cable and unhook the spring found on the end of the cable from its respective actuator bracket. Refer to Figure 7.
- Slide the spring up the cable to expose the cable coupler threads and lock nut. Refer to Figure 8.
- Adjust the lock nut as follows:
  - If adjusting the wheel drive cable, thread the lock nut outward (down the coupler) to lengthen the cable and allow the unit to move freely when the control is released. Thread the lock nut inward (up the coupler) to shorten the cable to reduce slippage and prevent the machine from being easily moved with the drive control engaged.
  - If adjusting the auger drive cable, thread the lock nut down to lengthen the cable as necessary to stop the auger from turning when the control is released.
- Reattach the spring to the actuator bracket.
- Repeat the wheel drive and auger control tests to verify proper adjustment. Repeat previous steps if necessary to attain proper adjustment of each cable.

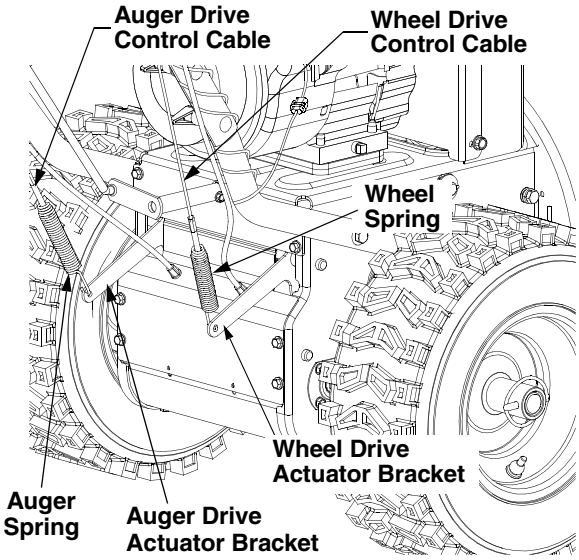

Figure 7

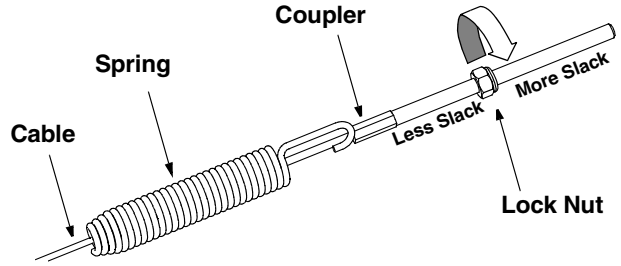

Figure 8

Tire Pressure (Pneumatic Tires)

The tires are overinflated for shipping purposes.

- Check tire pressure. Maintain pressure between 10 and 14 psi.

NOTE: *If the tire pressure is not equal in all tires, the unit may pull to one side or the other.*

WARNING: Maximum tire pressure under any circumstance is 30 psi. Equal tire pressure should be maintained at all times. Excessive pressure (over 30 psi) when seating beads may cause tire/rim assembly to burst with force sufficient to cause serious injury.

SECTION 3: KNOWING YOUR SNOW THROWER

WARNING: Be familiar with all the controls on the snow thrower and their proper operation. Know how to stop the machine and disengage them quickly.

Compare Figure 9 below with your equipment and be familiar with its controls before starting it.

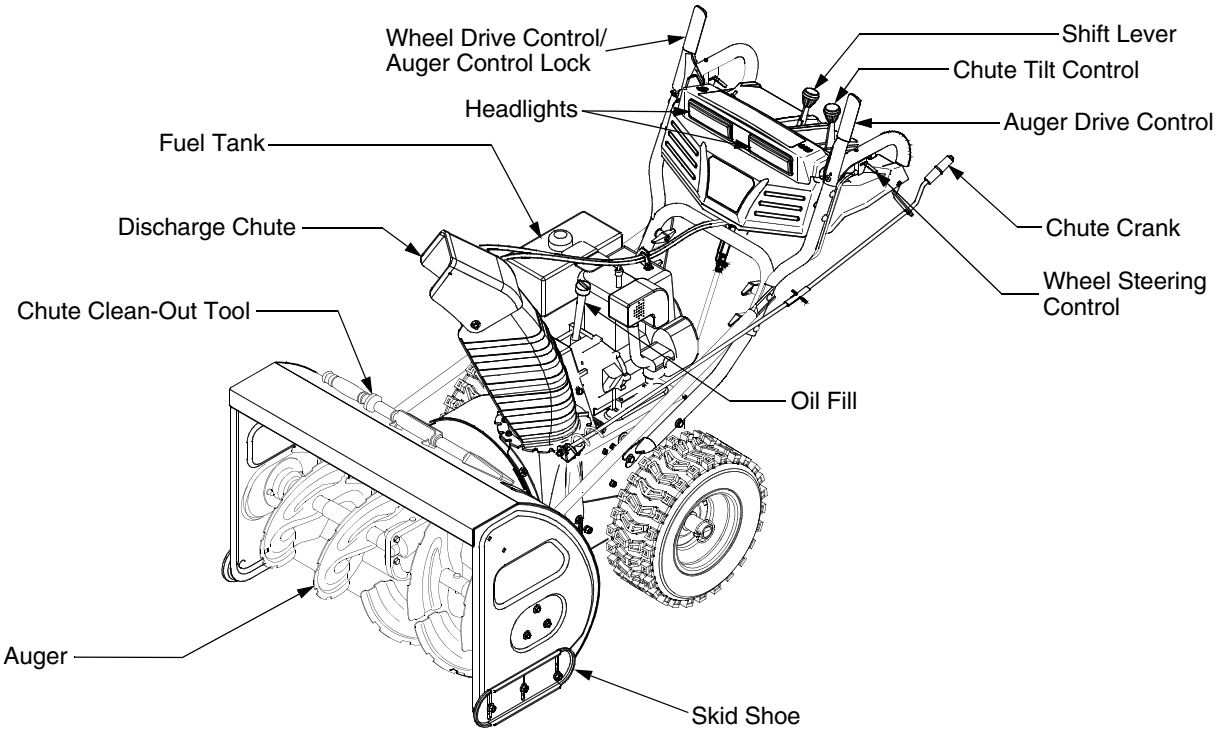

Figure 9

Drive Control / Auger Control Lock

The drive control is located on the right handle. Squeeze the drive control to engage the wheel drive. Release to stop.

This same lever also locks the auger control so you can operate the chute crank without interrupting the snow throwing process. If the auger control is engaged simultaneously with the drive control, the operator can release the auger control (on the left handle) and the augers will remain engaged. Release the drive control to stop the augers and wheel drive (the auger control must also be released).

IMPORTANT: Always release the drive control before changing speeds.

Auger Control

The auger control is located on the left handle. Squeeze the auger control to engage the augers. Release to stop the snow throwing action. The drive control must also be released in order to stop auger.

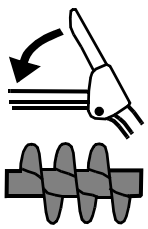

Shift Lever

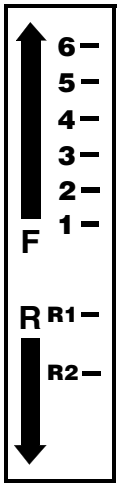

The shift lever is located in the center of the handle panel and is used to determine ground speed and direction of travel. It can be moved into any of eight positions.

IMPORTANT: Always release drive control before changing speeds.

Forward: The snow thrower has six forward (F) speeds. Position one (1) is the slowest and position six (6) is the fastest.

Reverse: The snow thrower has two reverse (R) speeds—R1 is the slower of the two.

Discharge Chute

The angle of the discharge chute controls the distance that the snow is thrown. Tilt the discharge chute up for greater distance; tilt down for less distance.

Chute Crank

The chute crank is located on the left side of the snow thrower. Use it to change the direction in which snow is thrown. Avoid directing at persons, animals, cars and buildings.



Chute Tilt Control

The distance snow is thrown can be changed by adjusting the angle of the chute assembly. Move the chute tilt control forward to decrease the distance, toward the rear to increase.

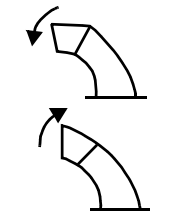

Wheel Steering Controls

The left and right wheel steering controls are located on the underside of the handles. Refer to Figure 9.

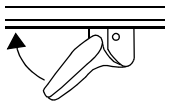

- Squeeze the right control to turn right; squeeze the left control to turn left.

NOTE: *Operate the snow thrower in open areas until you are familiar with these controls.*

Headlights

The headlights are on whenever the engine is running.

Skid Shoe

The skid shoe position is normally determined by the surface from which snow has to be removed. Loose surfaces (e.g. gravel or stone) require raising the snow thrower by adjusting the skid shoe to a lower position. Adjust accordingly.

Throttle Control

The throttle control is located on the engine. It regulates the speed of the engine.

Safety Ignition Key

The safety ignition key must be fully inserted in the switch before the unit will start. Remove key when snow thrower is not in use. Do not attempt to turn the key

Chute Clean-Out Tool

The chute clean-out tool is conveniently fastened to the rear of the auger housing with a mounting clip. Use the clean-out tool to clear snow and ice which may lodge in the discharge chute during operation. Refer to page 11 for instructions on how to properly use it.

WARNING: Never use your hand to clear a clogged discharge chute. Shut off engine and remain behind handles until all moving parts have stopped before unclogging.

SECTION 4: OPERATING YOUR SNOW THROWER

Before Starting

Read and understand all instructions and warnings on the machine and in this manual **before** operating.

Gas & Oil Fill-Up

- Service the engine with gasoline and oil as instructed in the separate engine manual shipped with the snow thrower.

WARNING: Use extreme care when handling gasoline. Gasoline is extremely flammable and the vapors are explosive. Never fuel machine indoors or while the engine is hot or running. Extinguish cigarettes, cigars, pipes and other sources of ignition.

To Start Engine

IMPORTANT: If unit shows any sign of motion (drive or augers) with the clutch grips disengaged, shut engine off immediately. Readjust controls as instructed in *Final Assembly Adjustments* of the Assembly Section.

- Attach spark plug wire to spark plug.
- Make certain the auger and drive clutch levers are in the disengaged (released) position. Refer to Figure 6.
- Move throttle control up to FAST position.
- Insert ignition key into slot. Be certain it snaps into place. **Do not turn key.**

NOTE: *Engine will not start unless ignition key is inserted into ignition slot in engine cover.*

Electric Starter

WARNING: The electric starter is equipped with a grounded three-wire power cord and plug and is designed to operate on 120 volt AC household current. It must be used with a properly grounded three-prong receptacle at all times to avoid the possibility of electric shock. Follow all instructions carefully prior to operating the electric starter.

- Determine that your house wiring is a three-wire grounded system. Ask a licensed electrician if you are not certain.
  If your house wiring system is not a three-wire grounded system, do not use this electric starter under any conditions.

If your home electrical system is grounded, but a three-hole receptacle is not available, one should be installed by a licensed electrician before using the electric starter.

If you have a grounded three-prong receptacle, proceed as follows:

- Connect power cord to switch box on engine. Plug the other end of power cord into a three-hole, grounded 120 volt AC receptacle.
- Rotate choke knob to ON position.
- Push primer button three times, making sure to cover vent hole when pushing.
- Push starter button on top of the engine to crank engine. As you crank the engine, move choke knob to FULL choke position.

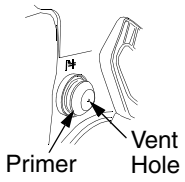

- When engine starts, release starter button, and move choke gradually to OFF. If engine falters, move choke immediately to FULL and then gradually to OFF.
- When disconnecting the power cord, always unplug from the power receptacle first and then from the snow thrower.

Recoil Starter

- Rotate choke knob to FULL choke position (cold engine start). If engine is warm, place choke in OFF position instead of FULL.
- Push primer button two or three times. If engine is warm, push primer button once only. Always cover vent hole in primer button when pushing.
  At temperatures below 15°F, additional priming may be necessary .
- Grasp starter handle and pull rope out slowly, until it pulls slightly harder. Let rope rewind slowly.
- Pull starter handle rapidly. Do not allow handle to snap back. Allow it to rewind slowly while keeping a firm hold on the starter handle.
- Repeat the previous steps until engine starts.

To Stop Engine

- Run engine for a few minutes before stopping to help dry off any moisture on the engine.
- To prevent possible freeze-up of starter:
  Electric Starter: Connect power cord to switch box on engine, then to 120 volt AC receptacle. With the engine running, push starter button and spin the starter for several seconds. The unusual sound made by spinning the starter will not harm engine or starter. Disconnect the power cord from receptacle first, and then from switch box.
  Recoil Starter: With engine running, pull starter rope with a rapid, continuous full arm stroke three or four times. Pulling the starter rope will produce a loud clattering sound, which is not harmful to the engine or starter.
- Move throttle control to “STOP” or “OFF” position.
- Remove ignition key. Do not turn key. Disconnect the spark plug wire from the spark plug to prevent accidental starting while equipment is unattended.

NOTE: *Keep key in a safe place. Engine will not start without ignition key.*

- Wipe all snow and moisture from the carburetor cover in the area of the control levers. Also, move control levers back and forth several times.

To Engage Wheel Drive

- With the engine running near top speed, move shift lever to one of the eight positions to set desired speed and direction. Select speed appropriate for the snow conditions that exist.

NOTE: *Use slower speeds in higher snow and/or until you are familiar with the snow thrower operation.*

- Squeeze wheel drive control against the right handle to move the snow thrower; release it to stop.

IMPORTANT: NEVER move the shift lever without first releasing the wheel drive control. Doing so will cause premature wear on the drive system’s friction wheel.

To Engage Augers

- To engage augers and start snow throwing, squeeze the auger control against the left handle.
- To disengage power to the augers, release both the auger control and the wheel drive control, if engaged.

Operating Tips

NOTE: *Allow the engine to warm up for a few minutes. The engine will not develop full power until it reaches operating temperature.*

WARNING: The temperature of the muffler and the surrounding areas may exceed 150° F. Avoid these areas.

- If possible, remove snow immediately after it falls.
- Discharge snow downwind whenever possible.
- Slightly overlap each previous path.
- Set the skid shoes 1/4" below the shave plate for normal usage. Adjust them upward for hard-packed snow and downward when using on gravel or crushed rock.

Chute Clean-Out Tool

The chute clean-out tool is conveniently fastened to the rear of the auger housing with a mounting clip. **Never** use your hand to clean a clogged chute or chute opening; use this clean-out tool instead.

- Release both the wheel drive control and the auger drive control levers.
- Stop the engine by removing the ignition key.
- Remove the chute clean-out tool from the clip which secures it to the rear of the auger housing. See Figure 10.
- Use the shovel-shaped end of the clean-out tool to remove any snow and ice in the discharge chute.
- Re-fasten the clean-out tool to the mounting clip on the rear of the auger housing and restart engine.
- While standing in the operator's position (behind the snow thrower), engage the auger clutch lever for a few seconds to clear any remaining snow or ice from the discharge chute before continuing to clear snow.

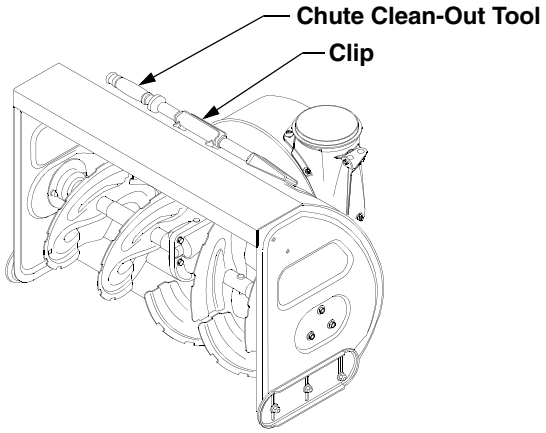

Figure 10

SECTION 5: MAKING ADJUSTMENTS

WARNING: NEVER attempt to clean chute or make any adjustments while engine is running.

Shift Rod

If you are unable to shift into all six forward positions or the two reverse positions, it may be necessary to adjust the shift rod. Adjust the shift rod as follows:

- From beneath the handle panel, note the hole location and direction of insertion of the shift rod ferrule in the shift lever. The ferrule is normally inserted into the lower/rear hole of the shift lever from the right side.
- Remove the internal cotter pin and flat washer from the ferrule and withdraw the ferrule from the shift lever. Refer to Figure 11.
- Place shift lever in the sixth (6) position or fastest forward speed.
- Push shift arm assembly down as far as it will go.
- As necessary, rotate the ferrule up or down the shift rod until the ferrule aligns with the lower/rear hole of the shift lever. Refer to Figure 11.
- Insert the ferrule into the lower/rear hole from the right side of the shift lever.
- Reinstall the washer and the internal cotter pin.

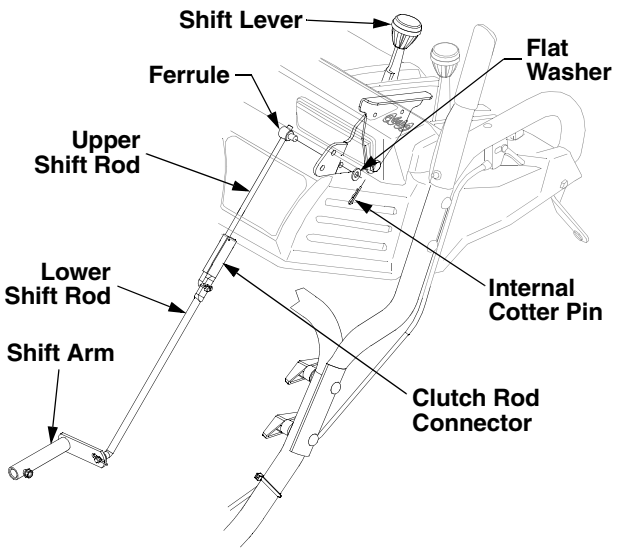

Figure 11

IMPORTANT: Before operating the snow thrower, make sure the wheel drive control cable is correctly adjusted according to instructions beginning on page 6.

NOTE: *For adjustment of the auger control, refer to Final Assembly Adjustments in Section 2.*

Wheel Drive Control

If you are uncertain about correct adjustment, proceed as follows:

- Drain the gasoline out of your snow thrower's engine, and place a piece of plastic film under the gas cap to avoid spillage.
- Tip the snow thrower forward, allowing it to rest on the auger housing.
- Remove the frame cover underneath the snow thrower by removing six self-tapping screws.
- Locate the opening between the axle support bracket and the front frame support (See Figure 12). Looking through the opening, perform the following checks and adjust as necessary:
  a. With the wheel drive control released, check if there is clearance between friction wheel and drive plate in all positions of the shift lever. See Figure 12.
  b. With the wheel drive lever engaged, check if the friction wheel solidly contacts the drive plate. See Figure 12.
  c. If there is no friction wheel clearance, or the friction wheel does not solidly contact the drive plate, re-adjust the lock nut on the lower end of the wheel drive cable following the instructions on page 7.
- Reassemble the frame cover.
- If you placed plastic film under the gas cap earlier, remove it now.

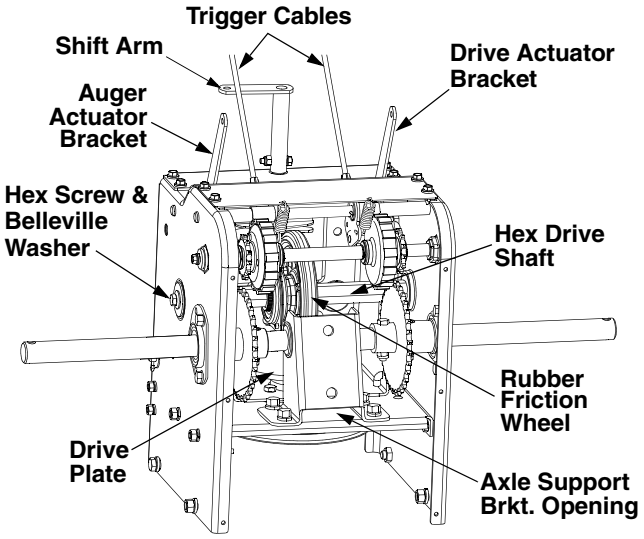

Figure 12

Auger Control

Refer to instructions for adjusting the auger control on page 7. Make certain to check for correct adjustment as instructed before operating the snow thrower.

Chute Assembly

The distance snow is thrown can be adjusted by adjusting the angle of the chute assembly. Refer to page 9 for instructions.

The remote chute control cables have been pre-adjusted at the factory. Move the remote chute lever on the control panel back and forward to adjust angle of the chute assembly.

Skid Shoe

The space between the shave plate and the ground can be adjusted by raising or lowering the skid shoes.

For close snow removal on a smooth surface such as a concrete or asphalt driveway, place the skid shoes in the low position.

Adjust the skid shoes to the middle or high position when the area to be cleared is uneven.

When operating on gravel or stone driveways, always put skid shoes in the high position.

Adjust skid shoes as follows (Refer to Figure 13):

- Loosen, but do not remove, the three hex lock nuts which fasten the skid shoe to the auger housing.
- Raise or lower the skid shoe as needed to place the shave plate in the desired position above the ground.
- Retighten the hex lock nuts loosened earlier.
- As close as possible, adjust the skid shoe on the other side into the same position on the auger housing .

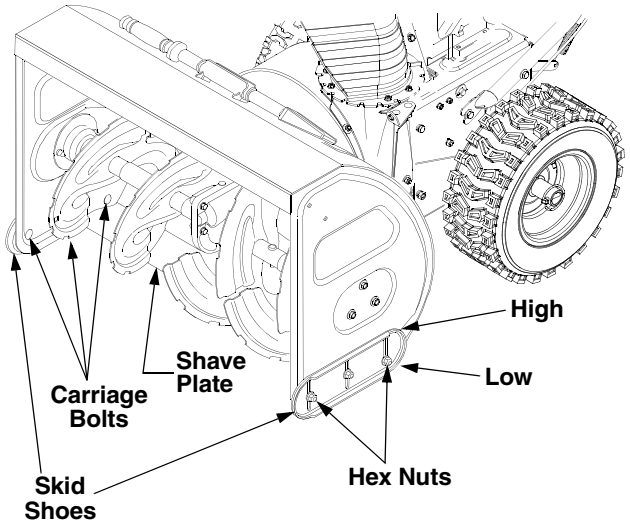

Figure 13

NOTE: *Make certain the bottom surface of skid shoe is flat against the ground to avoid uneven wear*

SECTION 6: MAINTAINING YOUR SNOW THROWER

WARNING: Before lubricating, repairing, or inspecting, disengage all clutch levers and stop engine. Wait until all moving parts have come to a complete stop. Disconnect the spark plug wire and ground it against the engine to prevent unintended starting.

General Recommendations

- Always observe safety rules when performing any maintenance.
- The warranty on this snow thrower does not cover items that have been subjected to operator abuse or negligence. To receive full value from the warranty, operator must maintain the snow thrower as instructed in this manual.
- Some adjustments will have to be made periodically to maintain your unit properly.
- Periodically check all fasteners and hardware to make sure they are tight.

Lubrication

Drive and Shifting Mechanism

- At least once a season or after every 25 hours of operation, remove rear cover. Lubricate all chains, sprockets, gears, bearings, shafts, and the shifting mechanism. Use engine oil or a spray lubricant. Refer to Figure 12.

IMPORTANT: Keep all grease and oil off the rubber friction wheel and drive plate.

Auger Gear Case

The auger gear case is lubricated with grease at the factory and it does not require checking. If disassembled for any reason, lubricate with 2 ounces of Shell Alvania grease EPR00, part number 737-0168. Before reassembling, remove old sealant and apply new sealant.

IMPORTANT: Do not overfill the gear case, since damage to the seals could result. Be sure the vent plug is free of grease in order to relieve pressure.

Auger Shaft

- At least once a season, use a spray lubricant to lubricate the auger shaft inside the auger spiral hubs and spiral spacers. The bowtie cotter pins and shear pins may be removed to aid in lubricating the spiral hubs. Spray lubricant inside hub and spin the auger spiral by hand to disperse the lubricant. See Figure 14.

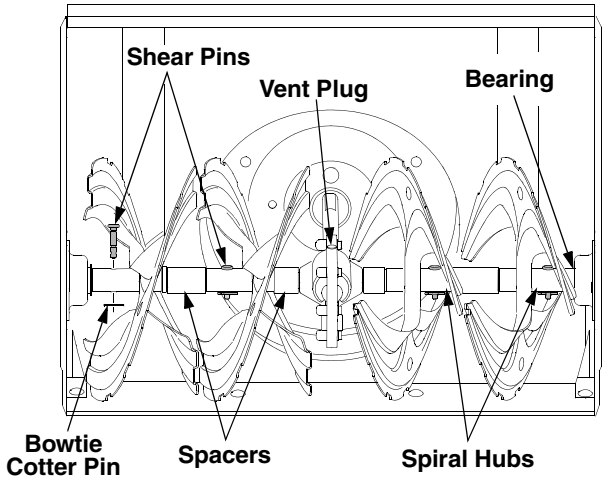

Figure 14

Discharge Chute

The base of the discharge chute and the worm coil on the chute crank should be lubricated at least every 25 hours of use. Apply the lubricant under the base of the chute and where the coil contacts the discharge chute. See Figure 15.

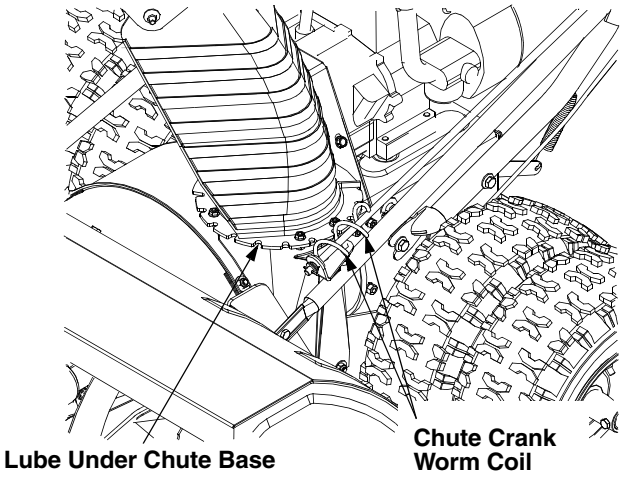

Figure 15

Auger Bearings and Shaft

- Every season lubricate the auger shaft bearing at each end of the shaft. See to Figure 14.
- Lubricate the bearings on the side of the frame with a light oil. From inside the wheels, spray lubricant into the bearings at least once a season.
- Remove the wheels, one side at a time, and clean and coat axles with multi-purpose automotive grease.

Wheel Drive Control / Auger Control Lock

The cams on the ends of the control rods which interlock the wheel drive and auger drive controls must be lubricated at least once a season or every 25 hours of operation using a multi-purpose automotive grease. The cams can be accessed from beneath the handle panel. See Figure 16.

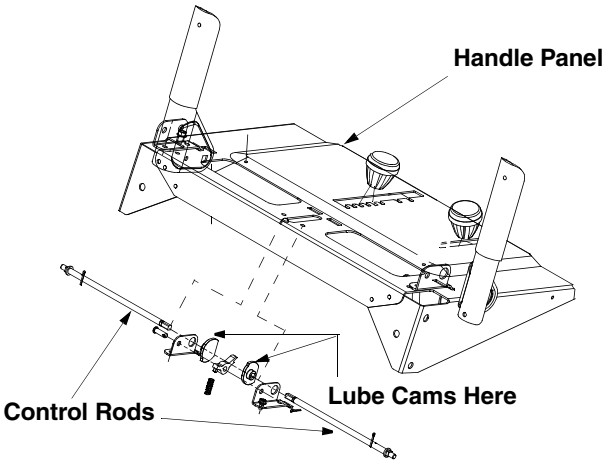

Figure 16

Friction Wheel Rubber

Follow the instructions below to check the condition of the friction wheel rubber every 25 hours of operation.

- Drain the gasoline out of your snow thrower's engine, and place a piece of plastic film under the gas cap to avoid spillage.
- Tip the snow thrower forward, allowing it to rest on the auger housing.
- Remove the six self-tapping screws from the frame cover underneath the snow thrower.
- Visually inspect the friction wheel rubber for excessive wear, cracks, or loose fit on the friction wheel drive hub.
- Engage the traction control and check if the friction wheel is making solid contact with drive plate (Refer to Figure 12). If it does not, adjust the lock nut on the lower end of the wheel drive cable following the instructions on page 7 and recheck the friction wheel.
- Replace the friction wheel rubber if necessary. Refer to instructions on page 17.
- Re-install the frame cover, lower the snow thrower back onto its wheels, and remove plastic film from the fuel tank.

Drive Belts

Follow the instructions below to check the condition of the drive belts every 50 hours of operation.

- Remove the plastic belt cover on the front of the engine by removing the three self-tapping screws and flat washers.
- Visually inspect for frayed, cracked, or excessively worn belts.
- Replace belts as necessary as outlined in Service Section on page 15.

Engine

Refer to the accompanying engine manual for all engine maintenance instructions and the required intervals for performing the procedures.

SECTION 7: SERVICING YOUR SNOW THROWER

WARNING: Before servicing, repairing, or inspecting, disengage all clutch levers and stop engine. Wait until all moving parts have come to a complete stop. Disconnect spark plug wire and ground it against the engine to prevent unintended starting.

Augers

The auger spirals are secured to the auger shaft with shear pins and bowtie cotter pins. If you hit a foreign object or ice jam, the snow thrower is designed so that the pins may shear. Refer to Figure 14.

If the augers do not turn, check if the pins have sheared. Two replacement shear pins and bowtie cotter pins have been provided with the snow thrower. When replacing pins, spray an oil lubricant into shaft before inserting new pins.

IMPORTANT: NEVER replace the auger shear pins with standard hex bolts. Any damage to the auger gearbox or other components, as a result of doing so, will NOT be covered by your snow thrower's warranty.

Shave Plate and Skid Shoes

The shave plate and skid shoes on the bottom of the snow thrower are subject to wear. These should be checked periodically and replaced when necessary.

Skid Shoes

NOTE: *The skid shoes on this machine have two wear edges. When one side wears out, they can be rotated 180° to use the other edge.*

- Remove the six carriage bolts, hex nuts, and bell washers that secure the two skid shoes to the sides of the auger housing. Refer to Figure 13.
- Position the new skid shoes and secure with the carriage bolts, bell washers, and hex nuts. Make certain the skid shoes are adjusted to be level.

Shave Plate

Replace the shave plate as follows (See Figure 17):

- Remove the five (seven on 45" S.T.), hex nuts, bell washers, and carriage bolts that secure the shave plate to the bottom of the housing.
- Remove the rear most hex nut, bell washer, and carriage bolt securing the back of each skid shoe to the sides of the housing. *Loosen* the four remaining hex nuts securing the skid shoes.
- Slide the shave plate out of the off-set slot at the bottom of the housing, and from between the skid shoes and side panels of the housing.
- With the mounting holes toward the back, slide the new shave plate into position and secure with the fasteners removed previously.

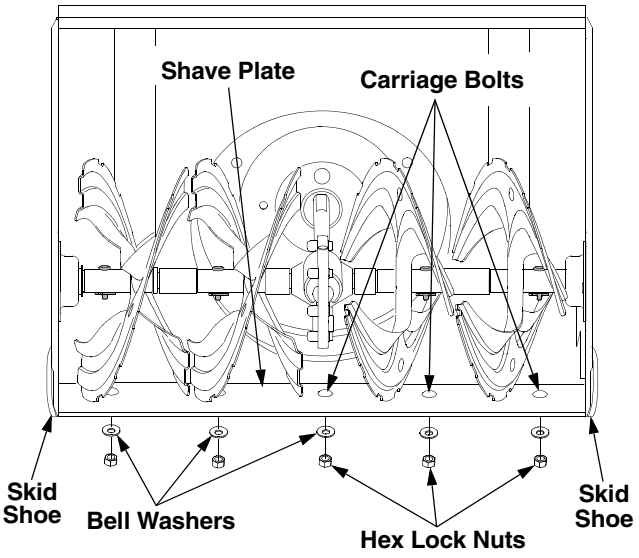

Figure 17

Replacing Belts

Snow Thrower Preparation

- Disconnect the chute crank assembly at the discharge chute end by removing the internal cotter pin and flat washer.
- Remove the plastic belt cover, located near the engine, by removing the three self-tapping screws and flat washers.

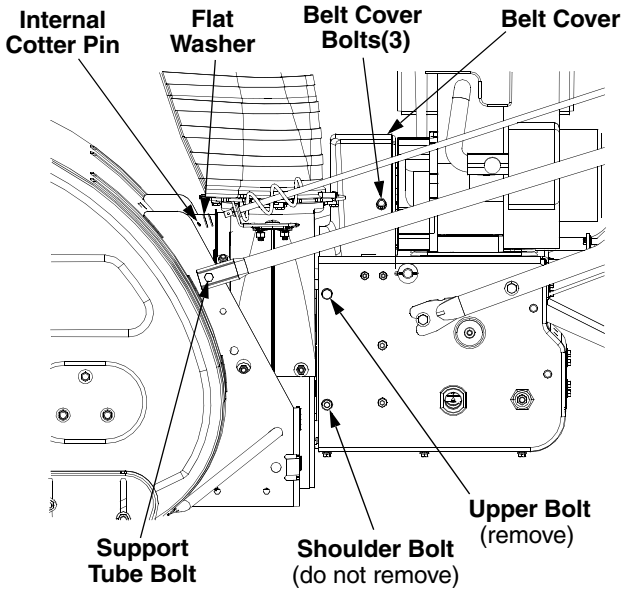

Figure 18

- Remove the large shoulder bolt and washer on the left hand side of the engine pulley. See Figure 19.

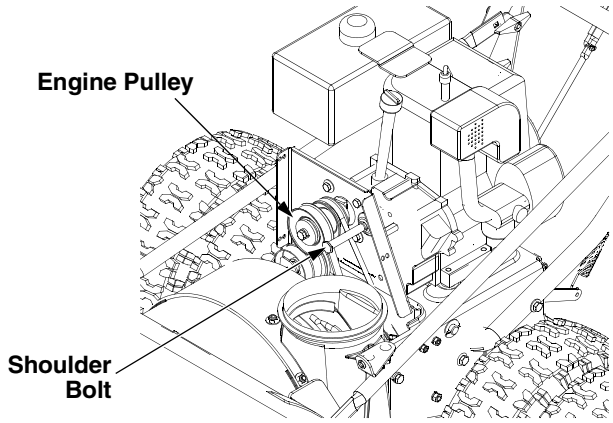

Figure 19

Auger Belt

NOTE: *Reference to right hand or left hand side of the machine are observed from the operating position.*

- Remove the internal cotter pin and flat washer from the ferrule in order to disconnect the auger idler rod from the brake bracket assembly. See Figure 20.
- Slip the auger drive belt (the front belt) off the engine pulley. See Figure 20.
- Pull the brake bracket assembly towards the cable guide roller and unhook the auger cable “Z” fitting.

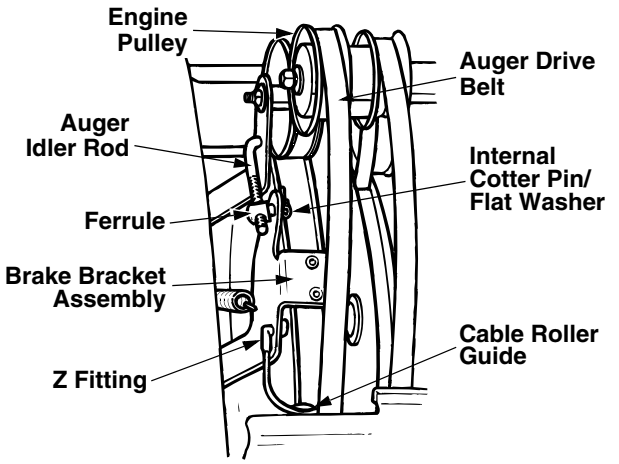

Figure 20

- Use a 9/16” wrench to remove the upper bolts and lock washers that secure the rear of the auger housing to the frame . Refer to Figure 18.
- Separate the auger housing from the frame by tilting the housing forward and pulling up the handles.
- Using a 1/2” wrench, remove the hex screw and belleville washer from the center of the pulley on the auger housing. Lift the brake bracket assembly out of the pulley groove and remove the pulley. Be careful not to lose the hi-pro key from the center of the pulley. See Figure 21.
- Place the new auger belt in the pulley groove. Position the pulley and belt inside the belt keepers on the rear of the auger housing. See Figure 21.

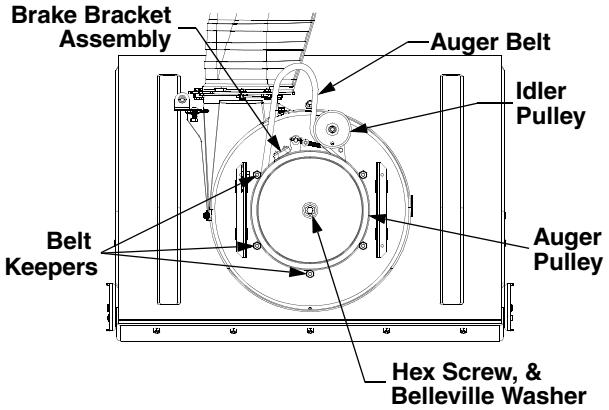

Figure 21

- Align the keyway of the pulley with the hi-pro key, lift the brake bracket assembly, and push the pulley fully onto auger gear box input shaft. Secure with the hex screw and belleville washer (cupped side toward the pulley). The brake puck must be seated in the pulley groove.
- Insert the ferrule on the auger idler rod into the brake bracket assembly and secure with the flat washer and internal cotter pin. Check for proper adjustment.

Proper Adjustment: With the auger clutch lever in the disengaged position, the top surface of the new belt should be even with the outside diameter of the pulley.

- To adjust, remove the auger idler arm ferrule from the brake bracket and thread the ferrule in (towards idler pulley) to increase tension on belt, or out to decrease tension.

NOTE: *The brake puck must always be firmly seated in the pulley groove when auger control is disengaged.*

- If also replacing the drive belt, proceed to the "Drive Belt" instruction. If not, reassemble the two halves of the unit hooking the lower portion of the auger housing over the stationary shoulder bolts in the frame assembly.
- Secure the two halves with the two bolts and lock washers removed earlier.
- Pull the brake bracket assembly toward the left side of the frame and re-insert the ‘Z’ fitting of the auger idler cable.
- Reinstall the shoulder bolt and lock washer on the left side of the engine pulley, and reinstall the belt cover.
- Position the chute crank rod and reinstall the flat washer and internal cotter pin.

Drive Belt

- Repeat the first five steps from the above "Auger Belt" sub-section to split the snow thrower.
- Pull the idler pulley away from the backside of the drive belt to relieve the tension and slide the drive belt off the idler pulley (If necessary unhook the extension spring from the belt cover plate). See Figure 22.
- Roll the drive belt off the lower drive pulley and remove the belt from the engine pulley.
- Install the new belt on the pulleys in the reverse order and re-tension with the idler pulley.

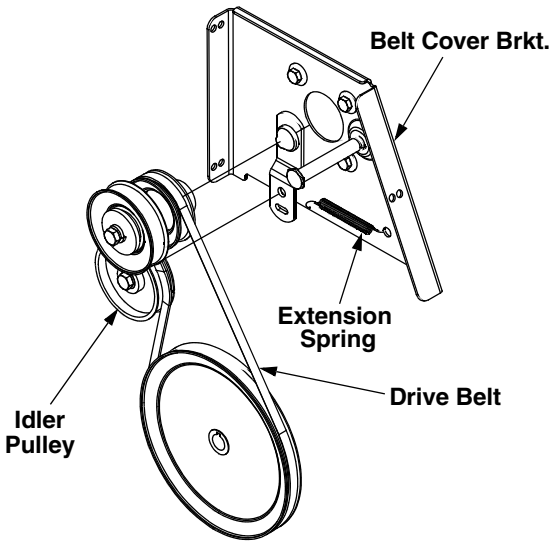

Figure 22

- Reinstall the auger drive belt and connect the auger idler arm following the instructions in the previous sub-section.
- Reassemble the two halves of the unit hooking the lower portion of the auger housing over the stationary shoulder bolts in the frame assembly.
- Secure the two halves with the two bolts and lock washers removed earlier.
- Slip the auger control belt over engine pulley.
- Attach the “Z” fitting of the cable into the brake bracket assembly. Refer to Figure 20.
- Reinstall the shoulder bolt and lock washer on the left side of the engine pulley, and reinstall the belt cover.
- Position the chute crank rod and reinstall the flat washer and internal cotter pin.

Changing Friction Wheel

The friction wheel is subject to wear and should be checked after the first 25 hours of operation, and periodically thereafter. Replace the friction wheel if any signs of wear or cracking are found.

- Drain the gasoline from the snow thrower, or place a piece of plastic under the gas cap.
- Tip the snow thrower up and forward, so that it rests on the housing.
- Remove the six screws from the frame cover underneath the snow thrower.
- Remove the right wheel(s) from the axle.
- Using a 3/4” wrench to hold the hex shaft, loosen but do not fully remove the hex screw from the left side of the frame. See Figure 23.

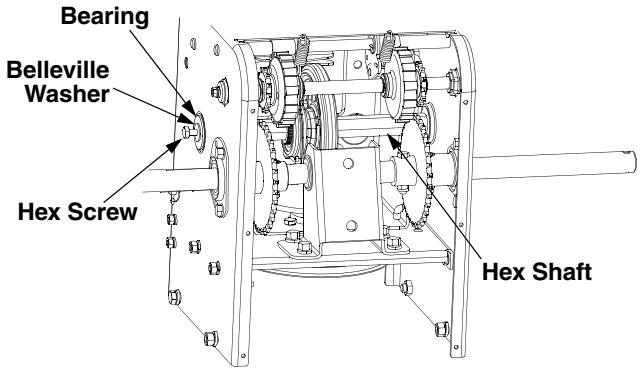

Figure 23

- Gently tap the head of the hex screw to drive the bearing on the right end of the hex shaft out of the frame housing; then remove the hex screw and belleville washer.
- Carefully pull the hex shaft out from the right side of the frame to slide the spacer and sprocket from the left end of the hex shaft. The sprocket should remain hanging lose in the chain. See Figure 24.

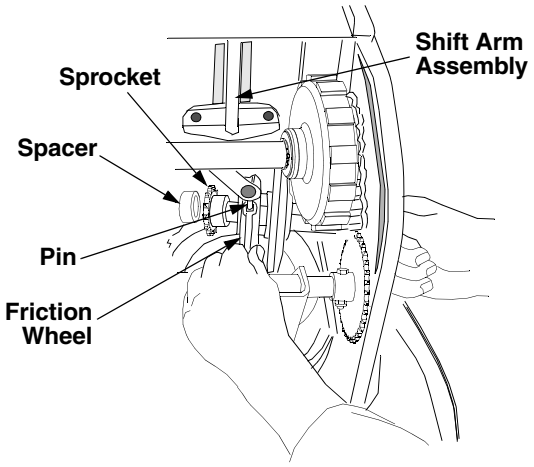

Figure 24

- After noting where the pin of the shift arm assembly is inserted into the friction wheel assemble, hold the friction wheel and continue to pull the hex shaft from the right side of the frame until friction wheel can be removed from the shaft.
- Lift the friction wheel assembly out between the axle support bracket and the steering shaft assemblies.

- Remove the four hex tapp screws securing the friction wheel to the bearing/extrusion plate assembly. See Figure 25.
- With its recessed face toward the extrusion plate, position the new friction wheel so that its four screw holes align with the extrusion plate holes; then push the friction wheel onto the hub of the bearing/ extrusion plate assembly. See Figure 25.
- Secure the friction wheel with the four hex tap screws. Torque the screws to 6-9 ft-lbs.

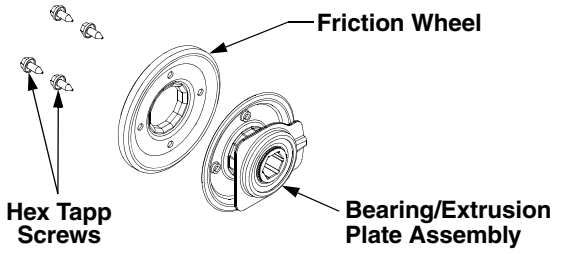

Figure 25

- Insert the pin from the shift arm assembly into the friction wheel assembly. Hold the assembly in position and slide the hex shaft through the right side of the assembly hub. Refer to Figure 24.
- Slide the hex hub of the sprocket onto the left end of the hex shaft. Slide the spacer onto the shaft. See Figure 26.

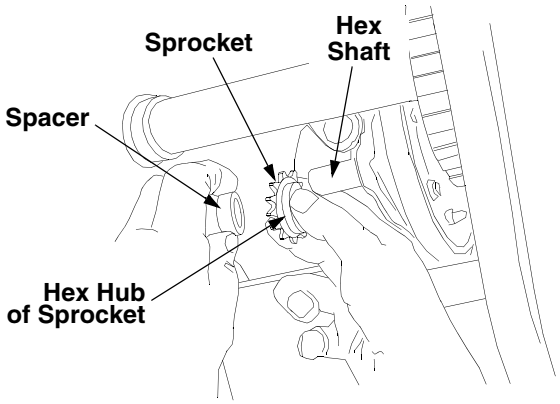

Figure 26

- After making certain the chain is properly positioned around the sprocket, push the hex shaft fully through the frame and into the bearing in the left side of the frame housing.
- Secure the hex shaft with the belleville washer and hex bolt removed earlier.
- Install the frame cover and secure with the six self-tapping screws. Do not overtighten the tapping screws.
- Lower the snow thrower to its normal operating position.

NOTE: *If you placed plastic film under the gas cap, be certain to remove it.*

SECTION 8: OFF-SEASON STORAGE

WARNING: Never store engine with fuel in tank indoors or in poorly ventilated areas, where fuel fumes may reach an open flame, spark or pilot light as on a furnace, water heater, clothes dryer or other gas appliance.

- If unit is to be stored over 30 days, prepare engine for storage as instructed in the engine manual.
- Remove all debris from the exterior of equipment.
- Follow lubrication recommendations on page 13.
- Always store the snow thrower in a clean, dry area.

NOTE: *When storing any type of power equipment in an unventilated or metal storage shed, care should be taken to rust proof the equipment. Using a light oil or silicone, coat the equipment, especially any chains, springs, bearings and cables.*

SECTION 9: TROUBLESHOOTING

Problem	Cause	Remedy
Engine fails to start.	1. Fuel tank empty, or stale fuel. 2. Blocked fuel line. 3. Choke not in ON position 4. Faulty spark plug. 5. Safety key not in ignition switch on engine. 6. Spark plug wire disconnected. 7. Primer button not being used properly.	1. Fill tank with fresh gasoline. 2. Clean the fuel line. 3. Move switch to ON position 4. Clean, adjust gap or replace. 5. Insert the key fully into the switch. 6. Connect spark plug wire. 7. Refer to the engine manual.
Engine runs erratic.	1. Unit running on CHOKE. 2. Blocked fuel line or stale fuel. 3. Water or dirt in fuel system. 4. Carburetor out of adjustment.	1. Move choke lever to OFF position. 2. Clean fuel line and fill tank with clean, fresh gasoline. 3. Drain fuel tank and carburetor. Refill with fresh fuel. 4. Refer to the engine manual.
Loss of power.	1. Spark plug wire loose. 2. Gas cap vent hole plugged. 3. Exhaust port plugged.	1. Connect and tighten spark plug wire. 2. Remove ice and snow from gas cap. Be certain vent hole is clear. 3. Refer to the engine manual.
Engine overheats.	1. Carburetor not adjusted properly.	1. Refer to the engine manual or have the carburetor adjusted by an authorized engine service dealer.
Excessive vibration.	1. Loose parts or damaged auger.	1. Stop engine immediately and disconnect spark plug wire. Tighten all bolts and nuts. If vibration continues, have unit serviced by an authorized service dealer.
Unit fails to propel itself.	1. Traction control cable in need of adjustment. 2. Drive belt loose or damaged.	1. Adjust traction control cable. Refer to Adjustments. 2. Replace drive belt.
Unit fails to discharge snow.	1. Discharge chute clogged. 2. Foreign object lodged in auger. 3. Auger control cable in need of adjustment. 4. Auger belt loose or damaged. 5. Shear bolt(s) sheared.	1. Stop engine immediately and disconnect spark plug wire. Clean discharge chute and inside of auger housing. 2. Stop engine immediately and disconnect spark plug wire. Remove object from auger. 3. Refer to Final Adjustments in Assembly Section. 4. Refer to Adjustments. 5. Replace shear bolt(s).

NOTE: *For repairs beyond minor adjustments listed above, contact your Cub Cadet dealer.*

SECTION 10: ILLUSTRATED PARTS LISTS

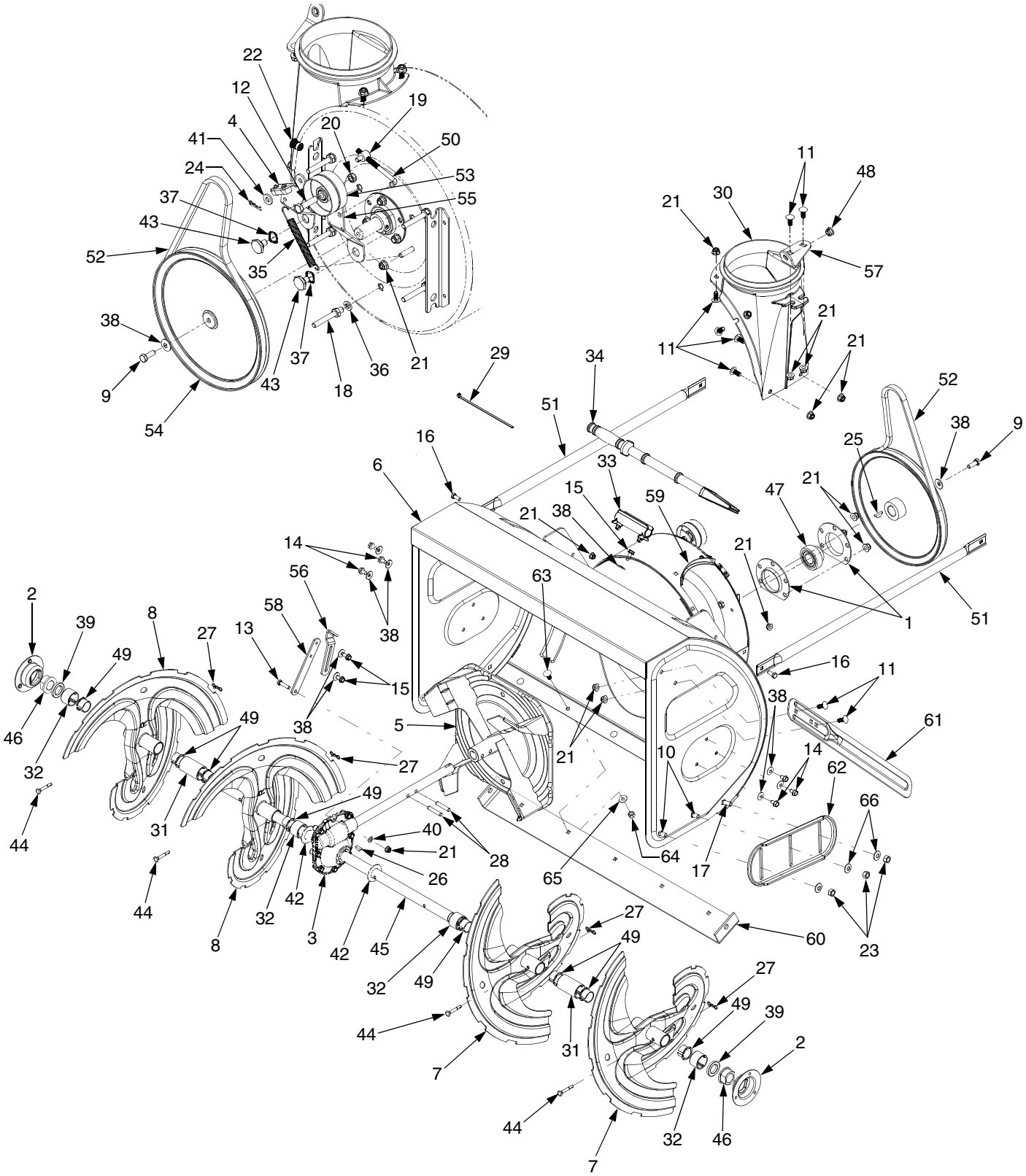

REF. NO.	PART NUMBER	DESCRIPTION	QTY.
1	05244A	Housing, Bearing	2
2	05845C	Housing, Double D Bearing	2
3	618-0257	Gear Box Assembly, Auger	1
4	618-0281A	Bracket Assembly, Auger Brake	1
5	684-0090A	Impellar , 16"	1
6	684-0164A	Housing, Auger — For 28" S.T.	1
	684-0166A	Housing, Auger — For 33" S.T.	1
	684-0155A	Housing, Auger — For 45" S.T.	1
7	684-04151	Spiral Ass'y, LH — 28" & 33" S.T.	2
	684-04151	Spiral Ass'y, LH — 45" S.T.	3
8	684-04152	Spiral Ass'y, RH — 28" & 33" S.T.	2
	684-04152	Spiral Ass'y, RH — 45" S.T.	3
9	710-0371	Screw, Hex Cap Lock, 5/16-18 x .875 GR5	1
10	710-04527	Screw, Carr, Stnls Stl, 3/8-16 x .75	4
11	710-0451	Screw, Carriage, 5/16-18 x .75	11
12	710-0459A	Screw, Hex Cap, 3/8-24 x 1.5 GR5	1
13	710-0528	Screw, Hex Cap, 5/16-18 x 1.25 GR5	1
14	710-0604A	Screw, Hex Wash Hd. Tapp 5/16-18 x .625	6
15	710-1260A	Screw, Hex Wash Hd Tapp 5/16-18 x .75	3
16	710-3008	Screw, Hex Cap, 5/16-18 x .75 GR5	2
17	710-04526	Screw, Carr, Stnls Stll 3/8-16 x 1.0	2
18	711-0640	Stud, 3/8-16 x 2.68	5
19	711-0677	Ferrule	1
20	712-0116	Nut, Hex Insert Jam Lock, 3/8-24 GR5	1
21	712-04063	Nut, Hx Ins Flnge Lk, 5/16-18 GrF	18
22	712-0717	Nut, Insert, 3/8-16	1
23	712-04102	Nut, Hex, Stnls Stl, 3/8-16	6
24	714-0104	Pin, Internal Cotter	1
25	714-0126	Key, Hi Pro, 3/16 x 3/4	1
26	714-0135	Key, Woodruff, #91: 1/4 x 3/4	1
27	714-04040	Pin, Bowtie Cotter — 28" & 33" S.T.	4
	714-04040	Pin, Bowtie Cotter — 45" S.T.	6
28	715-0118	Pin, Spirol, 5/16 x 1.75	2
29	725-0157	Tie, Cable	1
30	731-1696A	Adapter, Chute, 6"	1
31	731-05162	Spacer, 1.0 x 1.5 x 2.5Lg — 33" S.T.	2
32	731-05163	Spacer, 1.0 x 1.5 x 1.0Lg — 28" & 33" S.T.	4
	731-05163	Spacer, 1.0 x 1.5 x 1.0 — 45" S.T.	12
33	731-2635	Clip, Mounting	1
34	731-2643	Tool, Cleanout	1

REF. NO.	PART NUMBER	DESCRIPTION	QTY.
35	732-0858	Spring, Extension	1
36	736-0169	Washer, Lock, 3/8	5
37	736-0174	Washer, Wave, .625 x .885 x .015	2
38	736-0242	Washer, Belleville, .34 x .872 x .06	10
39	750-04020	Spacer, 1.004 x 1.375 x .25	2
40	736-0271	Washer, Spring, .317 x .625 x .02	1
41	736-3008	Washer, Flat, .344 x .75 x .12	1
42	736-3046A	Washer, Flat, Hdn., 1.01 x 1.86 x .06	2
43	738-0281	Screw, Shoulder, .625 x .17:3/8-16	2
44	738-04155	Pin, Shear, .25 x 1.75 — 28" & 33" S.T.	4
	738-04155	Pin, Shear, .25 x 1.75 — 45" S.T.	6
45	738-04156	Shaft, Spiral, — 28" S.T.	1
	738-04158	Shaft, Spiral, — 33" S.T.	1
	738-04159	Shaft, Spiral, — 45" S.T.	1
46	741-0192	Bearing, Flange w/Flats	2
47	741-04024	Bearing, Self Aligning	1
48	741-0475	Bushing, Nylon	1
49	741-0494	Bushing, Flange, — 28" & 33" S.T.	8
	741-0494	Bushing, Flange, — 45" S.T.	12
50	747-0980	Rod, Auger Idler	1
51	749-1117	Tube, Support	2
52	754-0222A	Belt, V, 1/2 x 44	1
53	756-0178	Pulley, Flat Idler, 2.75 OD	1
54	756-0243	Pulley, Auger Drive, 10.0	1
55	784-0385A	Bracket, Auger Idler	1
56	784-5076	Bracket, Gear Box Support	1
57	784-5123	Bracket, Chute Crank	1
58	784-5710	Plate, Support	1
59	784-5711	Bracket, Chute	1
60	790-00197	Plate, Shave, Stnls Stl — 28" S.T.	1
	790-00196	Plate, Shave, Stnls Stl — 33" S.T.	1
	790-00195	Plate, Shave, Stnls Stl — 45" S.T.	1
61	790-00181	Blade, Guide	2
62	790-00199	Shoe, Skid, Stnls Stl	2
63	710-04525	Screw, Carr., Stls Stl,5/16-18 x .75	
		— 28" & 33" S.T.	5
		— 45" S.T.	7
64	712-04103	Nut, Hex, Stnls Stl,	
		— 28" & 33" S.T.	5
		— 45" S.T.	7
65	736-04216	Washer, Bell, .34x.87x.06, Stnls Stl,	
		— 28" & 33" S.T.	5
		— 45" S.T.	7
66	736-04215	Washer, Bell, .37x.87x.06, Stnls Stl	6

NOTE: For **painted parts**, please refer to the list of color codes below. Please add the applicable color code to the part number to order a replacement part. For instance, if a part, numbered 700-xxxx, is painted Cub Yellow, the part number to order would be 700-xxxx-0716.

Cub Yellow: 0716
Cub Beige: 0499
Powder Black: 0637

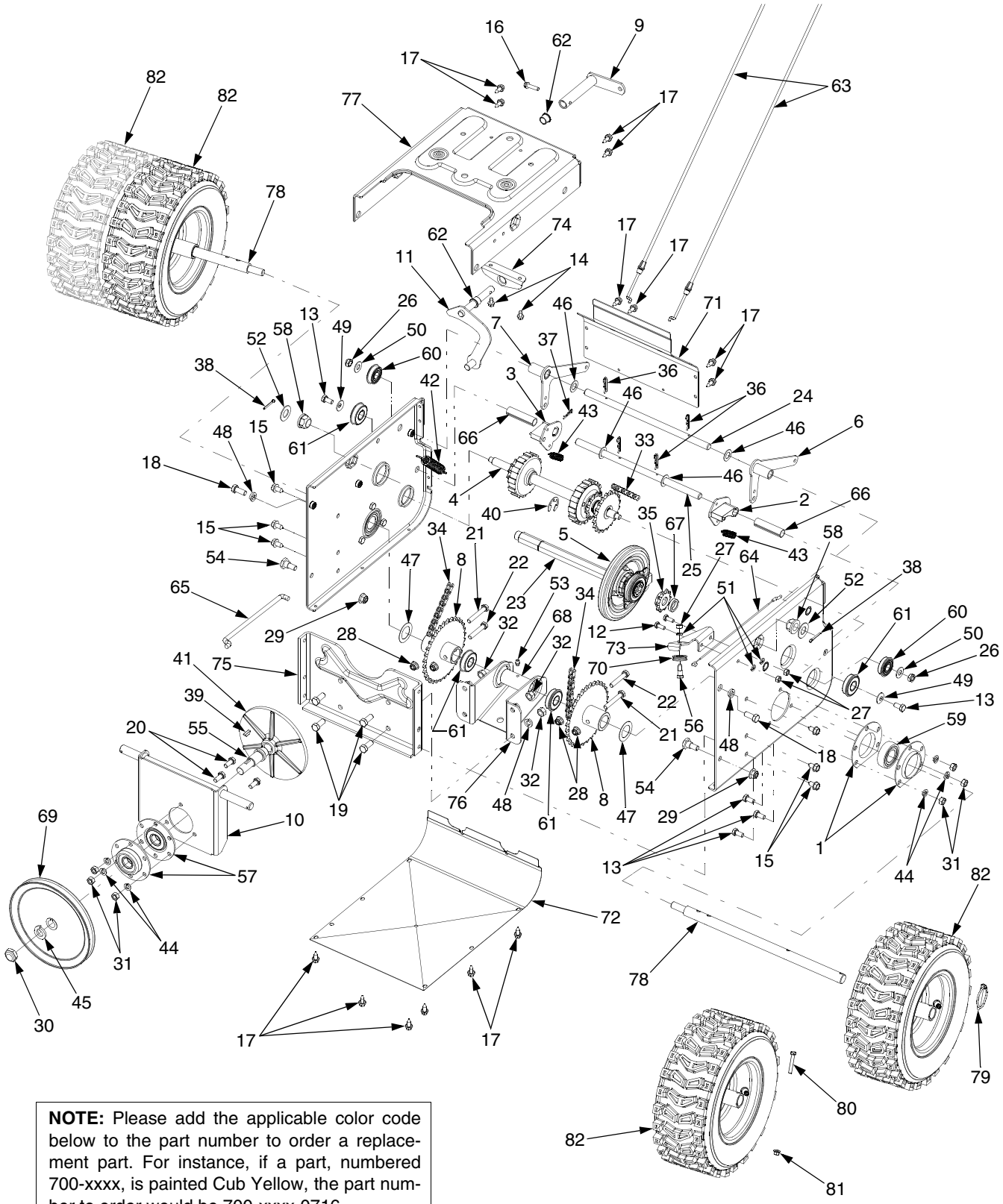

NOTE: Please add the applicable color code below to the part number to order a replacement part. For instance, if a part, numbered 700-xxxx, is painted Cub Yellow, the part number to order would be 700-xxxx-0716.

Cub Yellow: 0716
Cub Beige: 0499
Powder Black: 0637

REF. NO.	PART NUMBER	DESCRIPTION	QTY.
1	05244A	Housing, Bearing	4
2	618-0279	Dogg, Steering Drive, LH	1
3	618-0280	Dogg, Steering Drive, RH	1
4	618-0282D	Shaft Assembly, Steering	1
5	618-04178	Assembly, Friction Wheel	1
	718-04034	Wheel, Friction	1
	710-1652	Screw, Hex Wash Hd Tapp	4
6	684-0118	Bracket, Auger Actuator	1
7	684-0119	Bracket, Drive Actuator	1
8	684-0122	Sprocket, 32T	2
9	684-0161	Arm, Shift	1
10	684-0162	Bracket, Friction Drive Support	1
11	684-04103	Rod Assembly, Shift	1
12	710-0195	Screw, Hex Cap, 1/4-28 x .625 GR5	2
13	710-0538	Screw, Hex Cap Lock, 5/16-18 x .625 GR5	8
14	710-0599	Screw, Hex Wash. Hd. Tapp 1/4-20 x .5	2
15	710-0604A	Screw, Hex Wash. Hd. Tapp 5/16-18 x .625	6
16	710-0788	Screw, Hex Wash. Hd. Tapp 1/4-20 x 1.0	1
17	710-1652	Screw, Hex Wash. Hd. Tapp 1/4-20 x .625	14
18	710-1879	Screw, Hex Patch Lock, 3/8-16 x .88 GR5	2
19	710-3001	Screw, Hex Cap, 3/8-16 x .88 GR5	4
20	710-3008	Screw, Hex Cap, 5/16-18 x .75 GR5	3
21	710-3103	Screw, Hex Cap, 5/16-18 x 2.0 GR5	2
22	710-3180	Screw, Hx Cap, 5/16-18 x 1.75 GR5	2
23	711-04279	Shaft, Hex Drive	1
24	711-1193	Shaft, Actuator	1
25	711-1194	Shaft, Steering Actuator	1
26	712-0116	Nut, Hex Insert Jam Lock, 3/8-24 GR5	2
27	712-0138	Nut, Hex, 1/4-28 GR5	3
28	712-04063	Nut, Hx Flnge Insert Lk, 5/16-18 GrF	4
29	712-04065	Nut, Hx Flnge Insert Lk, 3/8-16 GrF	2
30	712-0413	Nut, Hx Insert Jam Lk, 5/8-18 GR5	1
31	712-3010	Nut, Hex, 5/16-18 GR5	9
32	712-3017	Nut, Hex, 3/8-16 GR5	4
33	713-0284	Chain, Endless, #41 x 36L	1
34	713-0286	Chain, #420 x 40L	2
35	713-04015	Sprocket, #41 x 10T	1
36	714-0101	Pin, Internal Cotter	4
37	714-0104	Pin, Internal Cotter	1
38	714-0115	Pin, Cotter, 1/8 x 1.0	2
39	714-0388	Key, Hi-Pro, 3/16 x 5/8	1
40	716-0136	Ring, Retaining	1
41	717-0302	Plate, Drive	1
42	732-0121	Spring, Extension	1
43	732-0209	Spring, Extension	2
44	736-0119	Washer, Lock, 5/16	9
45	736-0158	Washer, Lock, 5/8	1
46	736-0160	Washer, Flat, .53 x .93 x .05	4
47	736-0163	Washer, Flat, Hdn, 1.03 x 1.62 x .03	2
48	736-0217	Washer, Lock, 3/8	6
49	736-0242	Washer, Belleville, .34 x .872 x .06	2
50	736-0300	Washer, Flat, .406 x .875 x .059 .	2
51	736-0329	Washer, Lock, 1/4	3
52	736-0623	Washer, Flat, .64 x 1.24 x .06	2
53	737-3000	Fitting, Lube, 3/16 Drive	1
54	738-0143	Screw, Shoulder, .498 x .34:3/8-16	2
55	738-0279	Spindle, Drive Plate	1
56	738-0924	Screw, Hex Shoulder, 1/4-28:.375	1
57	741-0163A	Assembly, Bearing/Housing	2
58	741-0225	Bearing, Hex Flange	2
59	741-04025	Bearing, Self Aligning	2
60	741-04076	Bearing, Ball	2
61	741-0563	Bearing, Ball	4
62	741-0748	Bushing, Flange, .5 ID x .627 OD	1
63	746-0949A	Cable, Steering	2
64	746-0951	Cable, Auger Idler	1
65	747-0973	Rod, Drive Clutch	1
66	750-0903	Spacer, Split, .514 x .632 x 2.44 .	2
67	750-0997	Spacer, .675 x 1.0 x .23	1
68	750-1302A	Spacer, .6725 x 1.125 x 2.485	1
69	756-0344	Pulley, Drive	1
70	756-0625	Roller, Cable	1
71	784-0379	Cover, Upper Frame	1
72	784-0380	Cover, Lower Frame	1
73	784-0384	Bracket, Auger Cable Guide	1
74	784-0403	Bracket, Shift Shaft	1
75	784-0406	Bracket, Frame Support	1
76	784-0407	Bracket, Axle Support	1
77	784-04170	Frame, Transmission Includes 712-0717 Insert Nuts	1
78	738-1165A	Axle, Wheel — 28" S.T.	1
	738-1164A	Axle, Wheel — 33" S.T.	1
	738-1166A	Axle, Wheel — 45" S.T.	1
79	714-0151A	Pin, Klik	2
80	710-3103	Screw, Hex Cap, — 45" S.T. ONLY 5/16-18 x 2.0 GR5	2
81	712-04063	Nut, Hx Flnge Insert Lk, — 45" S.T. ONLY — 5/16-18 GrF	2
82	**See Wheel Table Below**		

WHEEL TABLE

S. T. Model	Description	Wheel Ass'y	Tire	Rim	Valve	Bearing
28" S.T. — 928 SWE	16 x 4.80 x 8 X-Trac — LH	634-04179	734-2038	734-1532	734-0255	741-0246A
	16 x 4.80 x 8 X-Trac — RH	634-04180				
33" S.T. — 933 SWE	16 x 6.50 x 8 X-Trac — LH	634-0225	734-2031	734-1124		
	16 x 6.50 x 8 X-Trac — RH	634-0226				
45" S.T. — 945 SWE	(2) 16 x 6.50 x 8 X-Trac — LH	(2) 634-0225				
	(2) 16 x 6.50 x 8 X-Trac — RH	(2) 634-0226				

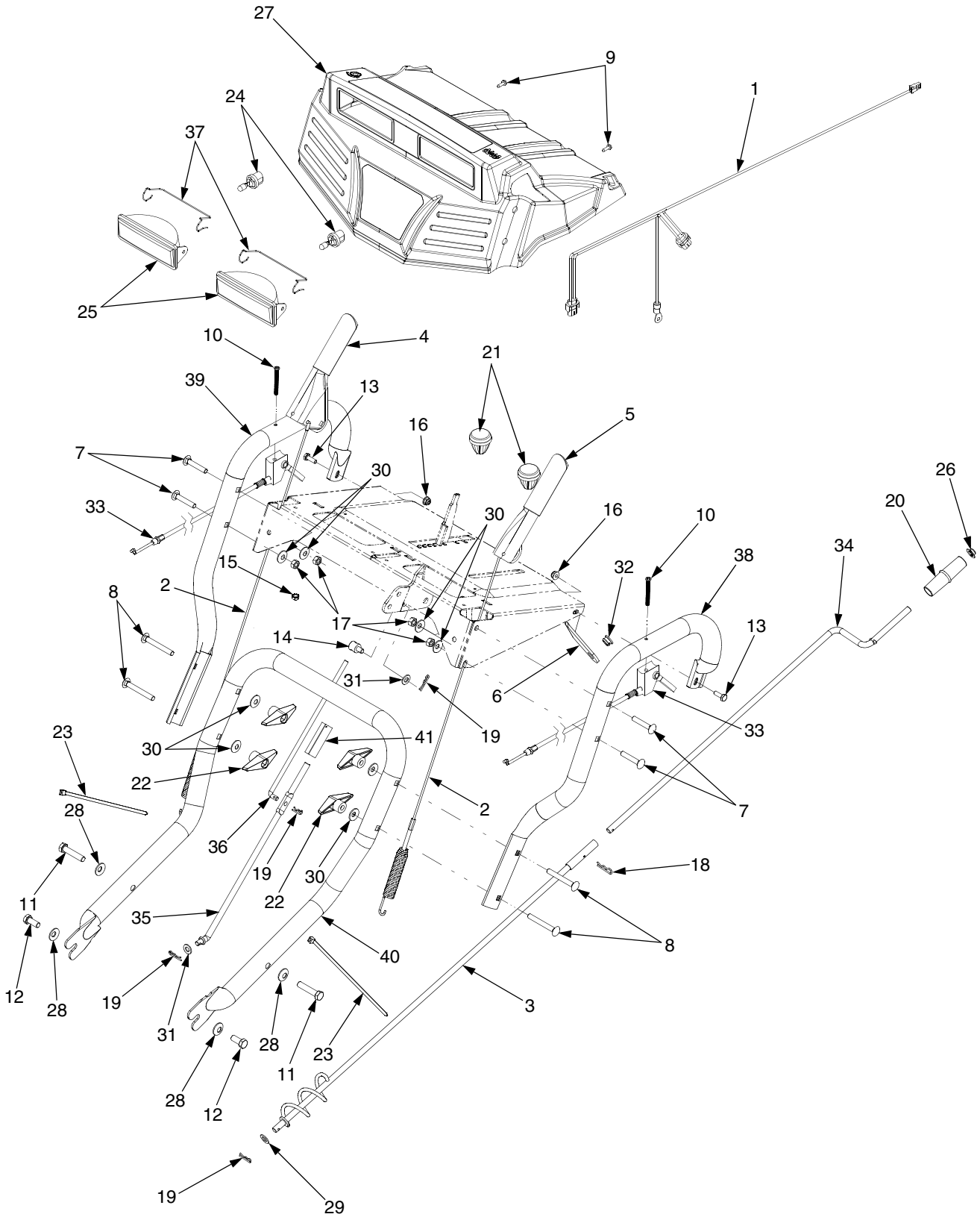
27
9
1
24
37
25
10
4
21
39
13
16
5
7
30
26
33
30
16
10
20
34
15
32
38
2
8
17
13
14
31
6
19
33
23
30
41
22
2
7
28
36
19
30
18
11
22
35
8
40
12
28
19
31
3
28
23
11
28
12
19
29

REF. NO.	PART NUMBER	DESCRIPTION	QTY.
1	629-04010	Harness, Headlight Wire	1
2	646-0012	Cable Assembly, Auger/Drive Engagement	2
3	684-0053B	Crank, Chute, 26.0	1
4	705-5218	Handle, Egagement, RH	1
5	705-5219	Handle, Egagement, LH	1
6	705-5266	Bracket, Chute Crank	1
7	710-0458	Screw, Carriage, 5/16-18 x 1.75	4
8	710-0572	Screw, Carriage, 5/16-18 x 2.5	4
9	710-1003	Screw, Hex Wash Hd Tapp, #10-16 x .625	2
10	710-1625	Screw, Oval Hd C/Sunk, #10-24 x 1.75	2
11	710-1878	Screw, Hex Patch Lock, 3/8-16 x 1,75 GR5	2
12	710-1879	Screw, Hex Patch Lock, 3/8-16 x .88 GR5	2
13	710-3015	Screw, Hex Cap, 1/4-20 x .75 GR5	2
14	711-0677	Ferrule, 5/16-18 x .312 Dia	1
15	712-0271	Nut, Hex Sems, 1/4-20	1
16	712-04064	Nut, Hex Flange Insert Lock, 1/4-20 GrF	2
17	712-3010	Nut, Hex, 5/16-18 GR5	4
18	714-0101	Pin, Internal Cotter	1
19	714-0104	Pin, Internal Cotter	4
20	720-0201A	Knob, Crank	1
21	720-0232	Knob, Shift	2
22	720-0284	Knob, Wing Nut, 5/16-18	4
23	725-0157	Tie, Cable	2
24	725-1658	Lamp, Halogen, 27W	2
25	725-1672	Housing, Lamp	2
26	726-0100	Cap, Push, 3/8	1
27	731-04069	Panel, Handle	1
	777I22553	Graphic, Left Turn/Auger Control	1
	777I22554	Graphic, Chute Tilt/Shift	1
	777I22556	Graphic, Starting Instr/Drive Control	1
	777I22363	Graphic, Drive/Auger Lock	1
	777D09462	Graphic, Cub Cadet	1
	777D09460	Graphic, 928 SWE — 28" S.T. Only	1
	777D09463	Graphic, 933 SWE — 33" S.T. Only	1
	777D09465	Graphic, 945 SWE — 45" S.T. Only	1
28	736-0105	Washer, Belleville, .375 x .87 x .063	4
29	736-0185	Washer, Flat, .375 x .738 x .063	1
30	736-0242	Washer, Belleville, .34 x .872 x .06	8
31	736-0275	Washer, Flat, .344 x .688 x .065	2
32	741-0475	Bushing, Plastic, .38 ID	1
33	746-0950A	Cable Assembly, Trigger Control	2
34	747-0624	Rod, Chute Crank	1
35	747-0983A	Rod, Lower Shift	1
36	747-0997	Rod, Upper Shift	1
37	747-1136	Retainer, Headlight	2
38	749-0989A	Handle, Upper LH	1
39	749-0990A	Handle, Upper RH	1
40	749-0991	Handle, Lower	1
41	750-0963	Connector, Shift Rod	1

NOTE: Please add the applicable color code below to the part number to order a replacement part. For instance, if a part, numbered 700-xxxx, is painted Cub Yellow, the part number to order would be 700-xxxx-0716.

Cub Yellow: 0716
Cub Beige: 0499
Powder Black: 0637

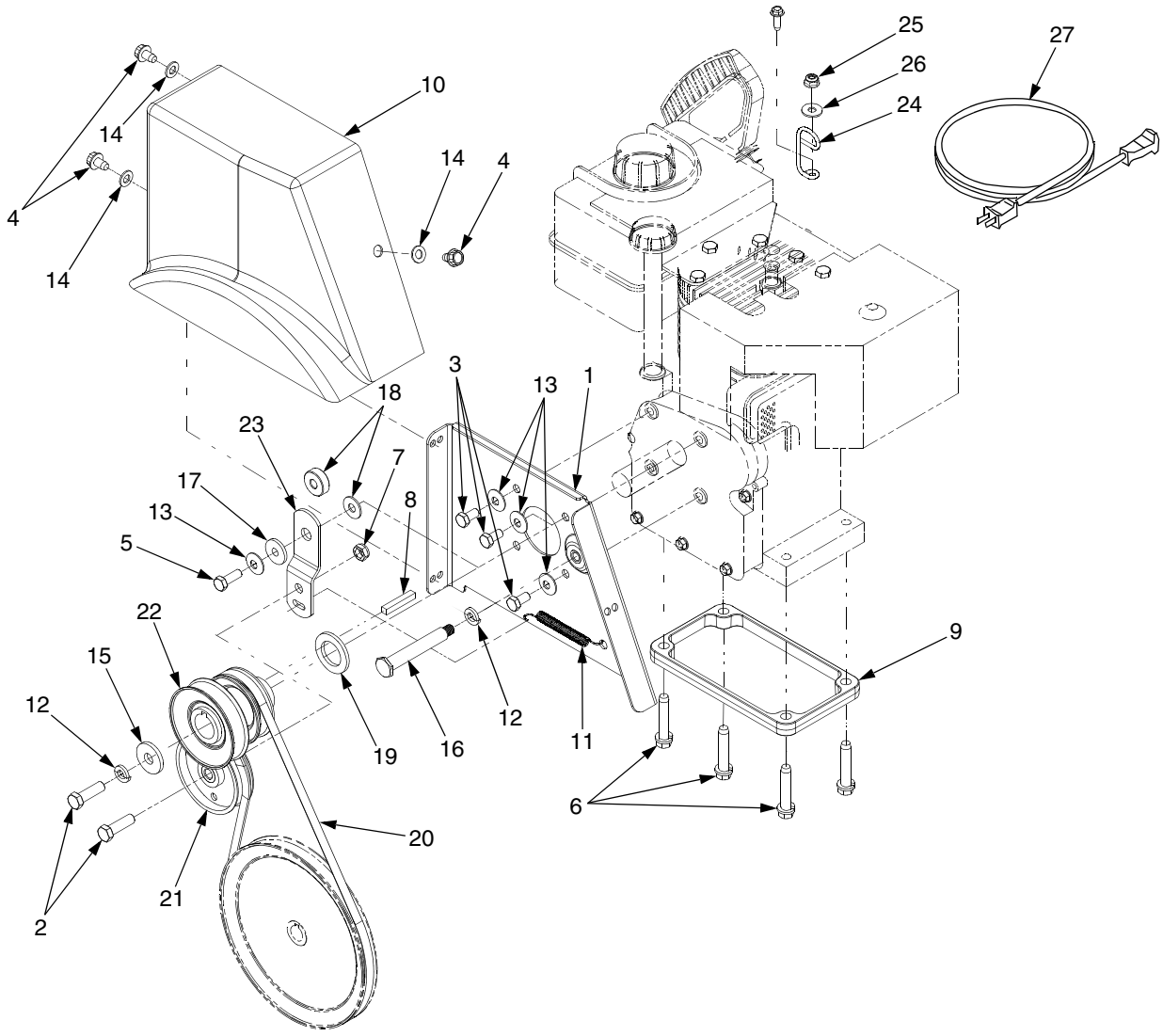
25
26
24
27
10
14
4
14
4
14
3
13
1
18
23
7
17
8
13
5
22
15
12
19
16
12
11
9
6
20
21
2

REF. NO.	PART NUMBER	DESCRIPTION	QTY.
1	684-0123A	Bracket, Belt Cover	1
2	710-0191	Screw, Hex Cap, 3/8-14 x 1.25 GR8	2
3	710-0237	Screw, Hx Cap, 5/16-24 x .625 GR5	3
4	710-0607	Screw, Hx Wash Hd Tapp, ... 5/16-18 x .5	3
5	710-0672	Screw, Hx Cap — 28" S.T. Only — 5/16-24 x 1.25 GR5	1
	710-1245B	Screw, Hx Cap — 33" and 45" S.T. Only — 5/16-24 x .875 GR8	1
6	710-1008	Screw, Hx Sems Tapp — 28" S.T. Only — 3/8-16 x 1.875	4
	710-0502	Screw, Hx Sems Tapp — 33" and 45" S.T. Only — 3/8-16 x 1.25	4
7	712-0116	Nut, Hx Insert Jam Lk, 3/8-24 GR5	1
8	714-0118	Key, Square, 1/4 x 1.5	1
9	717-0882A	Spacer, .56 — 28" S.T. Only	1
10	731-2531	Cover, Belt	1
11	732-0303	Spring, Extension	1
12	736-0217	Washer, Lock	2
13	736-0242	Washer, Belleville, .34 x .872 x .06	4
14	736-0264	Washer, Flat, .33 x .63 x .0635 ...	3
15	736-0322	Washer, Flat, Hdn .45 x 1.25 x .164	1
16	738-0982	Screw, Shoulder — 28" S.T. Only — .498 x 3.245:3/8-16	1
	738-0215A	Screw, Shoulder — 33" and 45" S.T. Only — .498 x 2.99:3/8-16	1
17	748-0234	Spacer, Shoulder	1
18	748-0418	Spacer — 28" S.T. Only — .331 x 1.01 x .36	1
	736-0159	Washer, Flat — 33" and 45" S.T. Only — .349 x .879 x .063	1
19	750-1148A	Spacer,— 28" S.T. Only — 1.02 x 1.63 x .1425	1
20	754-0131	V-Belt, 3/8 x 35.5	1
21	756-0240	Pulley, Flat Idler, 3.0 OD	1
22	756-0241B	Pulley, Double, 3.25 OD: 2.75 OD	1
23	784-5726	Bracket, Idler	1
24	732-0705	Guide, Chute Cable	1
25	712-04064	Nut, Hx Flnge Insert Lk — 33" and 45" S.T. Only — 1/4-20 GrF	1
26	736-0173	Washer, Flat — 33" and 45" S.T. Only — .28 x .74 x .o063	1
27	629-0071	Extension Cord, 110V, 3-prong ...	1

NOTE: Please add the applicable color code below to the part number to order a replacement part. For instance, if a part, numbered 700-xxxx, is painted Cub Yellow, the part number to order would be 700-xxxx-0716.

Cub Yellow: 0716
Cub Beige: 0499
Powder Black: 0637

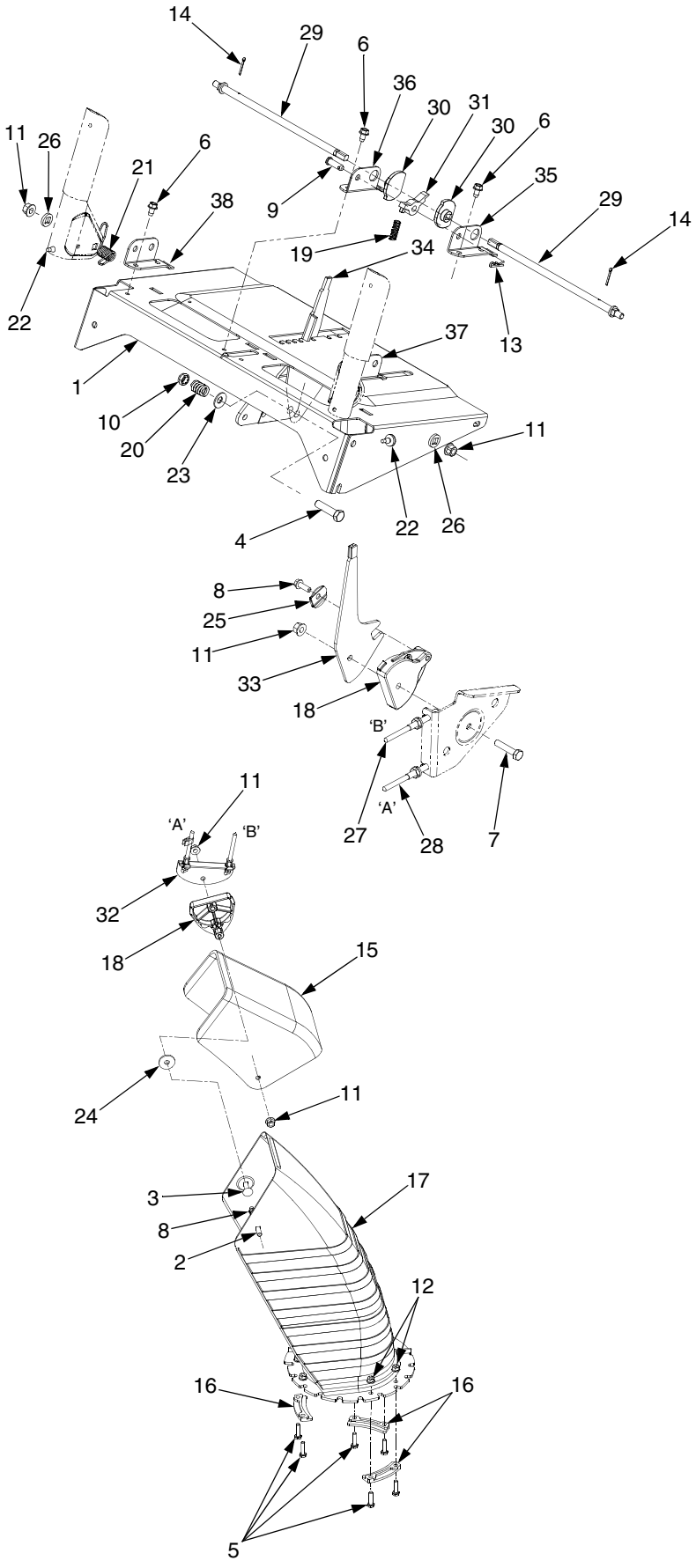
14
29
6
36
30
31
30
6
35
29
14
11
26
6
21
38
9
19
34
22
37
13
1
10
20
23
11
22
26
4
8
25
11
33
18
'B'
27
'A'
28
7
11
'A'
'B'
32
18
15
24
11
3
8
2
17
12
16
16
5

REF. NO.	PART NUMBER	DESCRIPTION	QTY.
1	684-0102	Panel, Handle	1
2	710-0276	Screw, Carriage, 5/16-18 x 1.0	1
3	710-0458	Screw, Carriage, 5/16-18 x 1.75	1
4	710-0459A	Screw, Hex Cap, 3/8-24 x 1.5 GR5	1
5	710-0597	Screw, Hex Cap, 1/4-20 x 1.0 GR5	6
6	710-0599	Screw, Hx Wash Hd Tapp ..... 1/4-20 x .5	4
7	710-0805	Screw, Hex Cap, 5/16-18 x 1.5 GR5	1
8	710-0895	Screw, Hx Wash Hd Tapp ..... 1/4-15 x .75	2
9	711-0653	Pin, Clevis, .312 x 1.0	1
10	712-0116	Nut, Insert Jam Lk, 3/8-24 GR5	1
11	712-04063	Nut, Hx Insert Flnge Lk, 5/16-18 GrF	5
12	712-04064	Nut, Hx Insert Flnge Lk, 1/4-20 GrF	6
13	714-0104	Pin, Internal Cotter	1
14	714-0507	Pin, Cotter, 3/32 x .75	2
15	731-0846C	Chute, Upper, 6.0	1
	777S32236	Graphic, Danger	1
16	731-0851A	Flange Keeper, Chute	3
17	731-0903D	Chute, Lower	1
18	731-1313C	Cable Guide, Chute Tilt	2
19	732-0145	Spring, Compression	1
20	732-0193	Spring, Compression	1
21	732-0746	Spring, Torsion	1
22	735-0199A	Bumper, Rubber	2
23	736-0105	Washer, Belleville, .375 x .87 x .063	1
24	736-0231	Washer, Flat, .344 x 1.125 x .12	1
25	36-0506A	Washer, Special, .286 x 1.25 x .06	1
26	736-0509	Washer, Flat, .35 Sq x .72 x .134	2
27	746-0902	Cable, Chute Control, 66"	1
28	746-0903	Cable, Chute Control w/Clip, 66"	1
29	747-0877	Rod, Cam	1
30	748-0362	Cam, Handle Lock	2
31	748-0363	Pawl, Handle Lock	1
32	784-5594	Bracket, Cable	1
33	784-5604	Handle, Chute Tilt	1
34	784-5619A	Handle, Shift	1
35	784-5679	Bracket, Handle Support, 5/8 LH ...	1
36	784-5680	Bracket, Handle Support, 5/8 RH ..	1
37	784-5681	Bracket, Handle Support, 3/8 LH ...	1
38	784-5682	Bracket, Handle Support, 3/8 RH ..	1

NOTE: Please add the applicable color code below to the part number to order a replacement part. For instance, if a part, numbered 700-xxxx, is painted Cub Yellow, the part number to order would be 700-xxxx-0716.

Cub Yellow: 0716
Cub Beige: 0499
Powder Black: 0637

MANUFACTURER'S LIMITED COMMERCIAL WARRANTY FOR:

Cub Cadet®

The limited warranty set forth below is given by LLC with respect to new merchandise used for commercial purposes and purchased and used in the United States and/or its possessions and territories, and by MTD Products Limited with respect to new merchandise purchased and used in Canada and/or its territories and possessions (either entity respectively, "Cub Cadet").

"Cub Cadet" warrants this product (excluding its normal wear parts as described below) against defects in material and workmanship for a period of one (1) year commencing on the date of original purchase and will, at its option, repair or replace, free of charge, any part found to be defective in materials or workmanship. This limited warranty shall only apply if this product has been operated and maintained in accordance with the Operator's Manual furnished with the product, and has not been subject to misuse, abuse, neglect, accident, improper maintenance, alteration, vandalism, theft, fire, water, or damage because of other peril or natural disaster. Damage resulting from the installation or use of any part, accessory or attachment not approved by Cub Cadet for use with the product(s) covered by this manual will void your warranty as to any resulting damage.

Normal wear parts are warranted to be free from defects in material and workmanship for a period of thirty (30) days from the date of purchase. Normal wear parts include, but are not limited to items such as: batteries, belts, blades, blade adapters, grass bags, rider deck wheels, seats, snow thrower skid shoes, friction wheels, shave plates, auger spiral rubber, and tires.

HOW TO OBTAIN SERVICE: Warranty service is available, WITH PROOF OF PURCHASE, through your local authorized service dealer. To locate the dealer in your area:

In the U.S.A.

To locate the dealer in your area, check your Yellow Pages, or contact Cub Cadet LLC at P.O. Box 361131, Cleveland, Ohio 44136-0019, or call 1-877-282-8684, or log on to our Web site at www.cubcadet.com.

In Canada

Contact MTD Products Limited, Kitchener, ON N2G 4J1, or call 1-800-668-1238, or log on to our Web site at www.mtdcanada.com.

This limited warranty does **not** provide coverage in the following cases:

a. The engine or component parts thereof. These items may carry a separate manufacturer's warranty. Refer to applicable manufacturer's warranty for terms and conditions.
b. Log splitter pumps, valves, and cylinders have a separate one year warranty.
c. Routine maintenance items such as lubricants, filters, blade sharpening, tune-ups, brake adjustments, clutch adjustments, deck adjustments, and normal deterioration of the exterior finish due to use or exposure.
d. Service completed by someone other than an authorized service dealer.
e. Cub Cadet does not extend any warranty for products sold or exported outside of the United States and/or Canada, and their respective possessions and territories, except those sold through Cub Cadet's authorized channels of export distribution.
f. Replacement parts that are not genuine Cub Cadet parts.
g. Transportation charges and service calls.

No implied warranty, including any implied warranty of merchantability of fitness for a particular purpose, applies after the applicable period of express written warranty above as to the parts as identified. No other express warranty, whether written or oral, except as mentioned above, given by any person or entity, including a dealer or retailer, with respect to any product, shall bind Cub Cadet. During the period of the warranty, the exclusive remedy is repair or replacement of the product as set forth above.

The provisions as set forth in this warranty provide the sole and exclusive remedy arising from the sale. Cub Cadet shall not be liable for incidental or consequential loss or damage including, without limitation, expenses incurred for substitute or replacement lawn care services or for rental expenses to temporarily replace a warranted product.

Some jurisdictions do not allow the exclusion or limitation of incidental or consequential damages, or limitations on how long an implied warranty lasts, so the above exclusions or limitations may not apply to you.

In no event shall recovery of any kind be greater than the amount of the purchase price of the product sold. **Alteration of safety features of the product shall void this warranty.** You assume the risk and liability for loss, damage, or injury to you and your property and/or to others and their property arising out of the misuse or inability to use the product.

This limited warranty shall not extend to anyone other than the original purchaser or to the person for whom it was purchased as a gift.

HOW LOCAL LAWS RELATES TO THIS WARRANTY: This limited warranty gives you specific legal rights, and you may also have other rights that vary in different jurisdictions.

IMPORTANT: Owner must present Original Proof of Purchase to obtain warranty coverage.

Cub Cadet LLC, P.O. BOX 361131 CLEVELAND, OHIO 44136-0019; Phone: 1-877-282-8684

MTD Canada Limited - KITCHENER, ON N2G 4J1; Phone 1-800-668-1238

MANUFACTURER'S LIMITED WARRANTY FOR:

Cub Cadet®

The limited warranty set forth below is given by Cub Cadet LLC with respect to new merchandise purchased and used in the United States, its possessions and territories, and by MTD Products Limited with respect to new merchandise purchased and used in Canada and/or its territories and possessions.

"Cub Cadet" warrants this product against defects in material and workmanship for a period of three (3) years commencing on the date of original purchase and will, at its option, repair or replace, free of charge, any part found to be defective in materials or workmanship. This limited warranty shall only apply if this product has been operated and maintained in accordance with the Operator's Manual furnished with the product, and has not been subject to misuse, abuse, commercial use, neglect, accident, improper maintenance, alteration, vandalism, theft, fire, water, or damage because of other peril or natural disaster. Damage resulting from the installation or use of any part, accessory or attachment not approved by Cub Cadet for use with the product(s) covered by this manual will void your warranty as to any resulting damage.

Normal wear parts are warranted to be free from defects in material and workmanship for a period of thirty (30) days from the date of purchase. Normal wear parts include, but are not limited to items such as: batteries, belts, blades, blade adapters, grass bags, rider deck wheels, seats, snow thrower skid shoes, shave plates, auger spiral rubber, and tires.

HOW TO OBTAIN SERVICE: Warranty service is available, WITH PROOF OF PURCHASE, through your local authorized service dealer. To locate the dealer in your area:

In the U.S.A.

To locate the dealer in your area, check your Yellow Pages, or contact Cub Cadet LLC at P.O. Box 361131, Cleveland, Ohio 44136-0019, or call 1-877-282-8684, or log on to our Web site at www.cubcadet.com.

In Canada

Contact MTD Products Limited, Kitchener, ON N2G 4J1, or call 1-800-668-1238, or log on to our Web site at www.mtdcanada.com.

This limited warranty does not provide coverage in the following cases:

a. The engine or component parts thereof. These items may carry a separate manufacturer's warranty. Refer to applicable manufacturer's warranty for terms and conditions.
b. Log splitter pumps, valves, and cylinders have a separate one year warranty.
c. Routine maintenance items such as lubricants, filters, blade sharpening, tune-ups, brake adjustments, clutch adjustments, deck adjustments, and normal deterioration of the exterior finish due to use or exposure.
d. Cub Cadet does not extend any warranty for products sold or exported outside of the United States and/or Canada, and their respective possessions and territories, except those sold through Cub Cadet's authorized channels of export distribution.
e. Replacement parts that are not genuine Cub Cadet parts.
f. Service completed by someone other than an authorized service dealer.
g. Transportation charges and service calls.

No implied warranty, including any implied warranty of merchantability of fitness for a particular purpose, applies after the applicable period of express written warranty above as to the parts as identified. No other express warranty, whether written or oral, except as mentioned above, given by any person or entity, including a dealer or retailer, with respect to any product, shall bind Cub Cadet. During the period of the warranty, the exclusive remedy is repair or replacement of the product as set forth above.

The provisions as set forth in this warranty provide the sole and exclusive remedy arising from the sale. Cub Cadet shall not be liable for incidental or consequential loss or damage including, without limitation, expenses incurred for substitute or replacement lawn care services or for rental expenses to temporarily replace a warranted product.

Some states do not allow the exclusion or limitation of incidental or consequential damages, or limitations on how long an implied warranty lasts, so the above exclusions or limitations may not apply to you.

In no event shall recovery of any kind be greater than the amount of the purchase price of the product sold. **Alteration of safety features of the product shall void this warranty.** You assume the risk and liability for loss, damage, or injury to you and your property and/or to others and their property arising out of the misuse or inability to use the product.

This limited warranty shall not extend to anyone other than the original purchaser or to the person for whom it was purchased as a gift.

HOW STATE LAW RELATES TO THIS WARRANTY: This limited warranty gives you specific legal rights, and you may also have other rights that vary in different jurisdictions.

IMPORTANT: Owner must present Original Proof of Purchase to obtain warranty coverage.

Cub Cadet LLC, P.O. BOX 361131 CLEVELAND, OHIO 44136-0019; Phone: 1-877-282-8684

MTD Canada Limited - KITCHENER, ON N2G 4J1; Phone 1-800-668-1238