Cub Cadet®

OPERATOR'S MANUAL

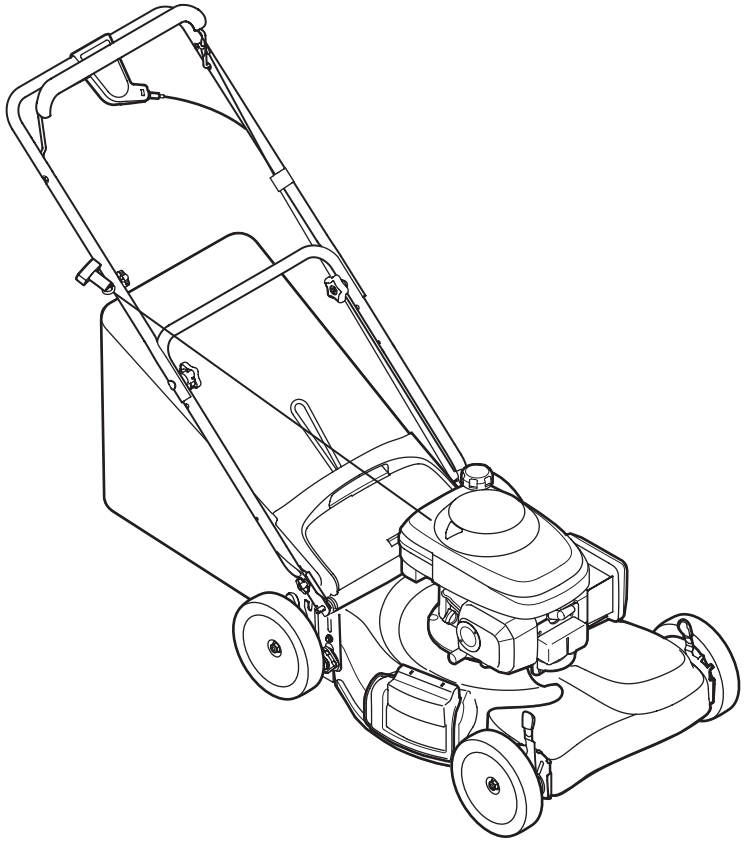

21" Rotary Mower — Model V469

IMPORTANT

READ SAFETY RULES AND INSTRUCTIONS CAREFULLY BEFORE OPERATION

Warning: This unit is equipped with an internal combustion engine and should not be used on or near any unimproved forest-covered, brush-covered or grass-covered land unless the engine's exhaust system is equipped with a spark arrester meeting applicable local or state laws (if any). If a spark arrester is used, it should be maintained in effective working order by the operator. In the State of California the above is required by law (Section 4442 of the California Public Resources Code). Other states may have similar laws. Federal laws apply on federal lands. A spark arrester for the muffler is available through your nearest engine authorized service dealer or contact the service department, P.O. Box 361131 Cleveland, Ohio 44136-0019.

PRINTED IN U.S.A.

CUB CADET LLC, P.O. BOX 361131 CLEVELAND, OHIO 44136-0019

FORM NO. 769-02346A
12/20/2006

This Operator's Manual is an important part of your new lawn mower. It will help you assemble, prepare, and maintain the unit for best performance. Please read and understand what it says.

Table of Contents

Slope Gauge..... 3
Safe Operation Practices..... 4
Setup and Adjustment 6
Operating Your Lawn Mower..... 8
Maintaining Your Lawn Mower..... 10
Troubleshooting..... 12
Off-Season Storage and Safety Labels 13
Parts List 14

Cub Cadet LLC reserves the right to change product specifications, designs, and equipment without notice and without incurring obligation.

Finding and Recording Model Number

BEFORE ASSEMBLING YOUR NEW EQUIPMENT, please locate the model plate on the equipment and copy the information to the sample model plate provided to the right. You can locate the model plate by standing at the operating position and looking down at the rear of the deck. This information will be necessary to use the manufacturer's web site, to obtain assistance from the Customer Support Department, or when contacting an authorized service dealer.

Model Number _____ **Serial Number** _____

Cub Cadet
www.cubcadet.com

CUB CADET LLC
P. O. BOX 361131
CLEVELAND, OH 44136
DEALER LOCATOR PHONE NUMBER: 877-282-8684

Customer Support

Please do *NOT* return the unit to the retailer from which it was purchased, without first contacting Customer Support.

If you have difficulty assembling this product or have any questions regarding the controls, operation, or maintenance of this unit, you can seek help from the experts. Choose from the options below:

- Visit **www.cubcadet.com** for many useful suggestions. Click on the Customer Service link and you will get several options to help in answering your questions. Click on the appropriate button and help is immediately available.
- Phone our **Customer Dealer Referral Line,** to find a dealer nearest you, at 1(877) 282-8684.
- The **engine manufacturer** is responsible for all engine-related issues with regards to performance, power-rating, specifications, warranty and service. Please refer to the engine manufacturer's Owner's/Operator's Manual, packed separately with your unit, for more information.

Use this page as a guide to determine slopes where you may not operate safely.

Do not operate your lawn mower on such slopes.

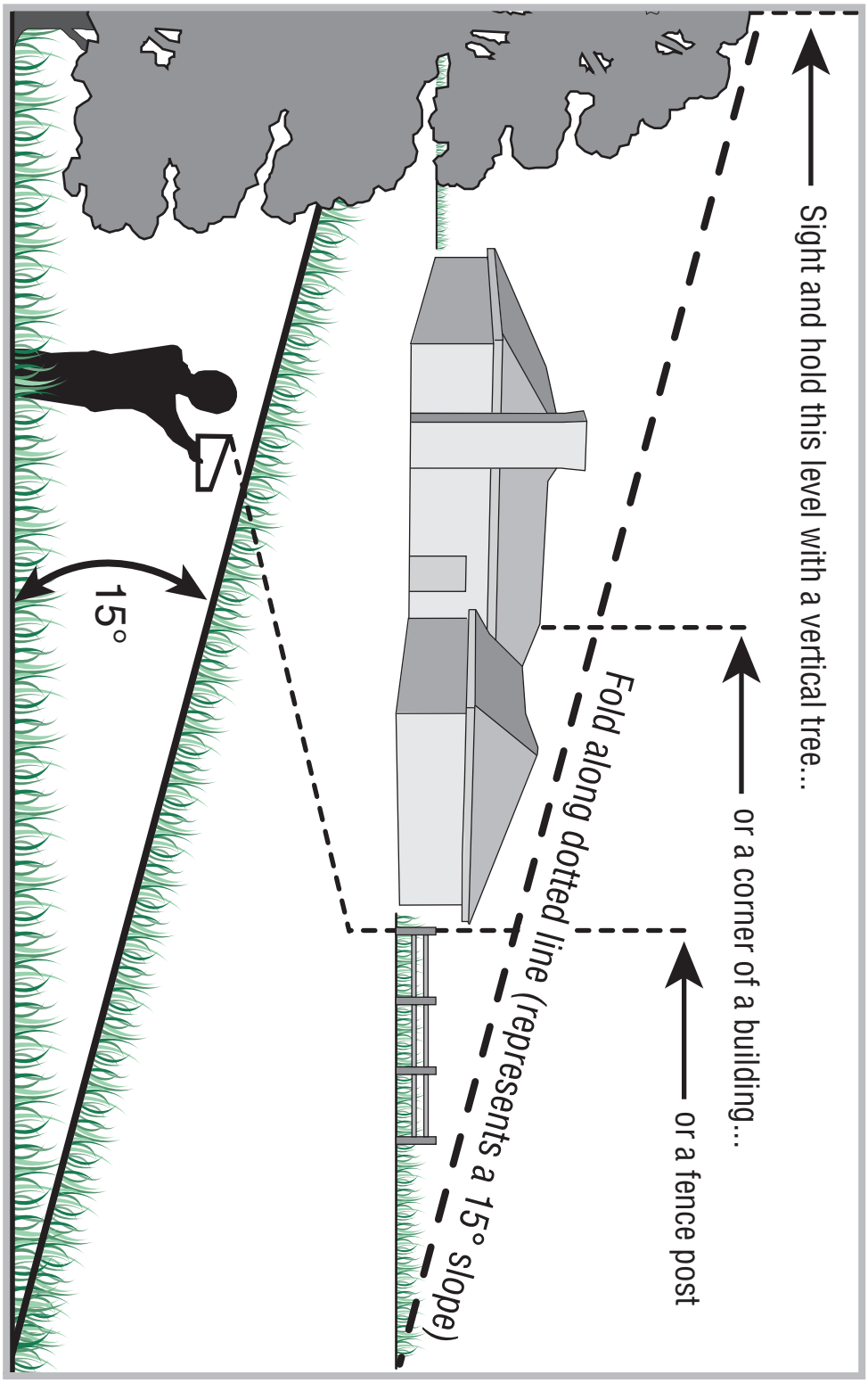

1

Slope Gauge

WARNING

Do not mow on inclines with a slope in excess of 15 degrees (a rise of approximately 2-1/2 feet every 10 feet).

Operate WALK-BEHIND mowers across the face of slopes, never up and down slopes.

2

Safe Operation Practices



WARNING

This symbol points out important safety instructions which, if not followed, could endanger the personal safety and/or property of yourself and others. Read and follow all instructions in this manual before attempting to operate this machine. Failure to comply with these instructions may result in personal injury. When you see this symbol.

HEED ITS WARNING!

Your Responsibility
Restrict the use of this power machine to persons who read, understand and follow the warnings and instructions in this manual and on the machine.



WARNING: Engine Exhaust, some of its constituents, and certain vehicle components contain or emit chemicals known to State of California to cause cancer and birth defects or other reproductive harm.

DANGER: This machine was built to be operated according to the rules for safe operation in this manual. As with any type of power equipment, carelessness or error on the part of the operator can result in serious injury. This machine is capable of amputating hands and feet and throwing objects. Failure to observe the following safety instructions could result in serious injury or death.

Children

Tragic accidents can occur if operator is not alert to presence of children. Children are often attracted to mower and mowing activity. They do not understand the dangers. Never assume that children will remain where you last saw them.

1. Keep children out of the mowing area and under watchful care of a responsible adult other than the operator.
2. Be alert and turn mower off if a child enters the area.
3. Before and while moving backwards, look behind and down for small children.
4. Use extreme care when approaching blind corners, doorways, shrubs, trees, or other objects that may obscure your vision of a child who may run into the mower.
5. Keep children away from hot or running engines. They can suffer burns from a hot muffler.
6. Never allow children under 14 years old to operate a power mower. Children 14 years old and over should read and understand operation instructions and safety rules in this manual and should be trained and supervised by a parent.

General Operation

1. Read this operator's manual carefully in its entirety before attempting to assemble this machine. Read, understand, and follow all instructions on the machine and in the manual(s) before operation. Be completely familiar with the controls and the proper use of this machine before operating it. Keep this manual in a safe place for future and regular reference and for ordering replacement parts.
2. This machine is a precision piece of power equipment, not a plaything. Therefore, exercise extreme caution at all times. Your unit has been designed to perform one job: to mow grass. Do not use it for any other purpose.
3. Never allow children under 14 years old to operate this machine. Children 14 years old and over should read and understand the instructions in this manual and should be trained and supervised by a parent. Only responsible individuals who are familiar with these rules of safe operation should be allowed to use this machine.
4. Thoroughly inspect the area where the equipment is to be used. Remove all stones, sticks, wire, bones, toys and other foreign objects, which could be tripped over or picked up and thrown by the blade. Thrown objects can cause serious personal injury. Plan your mowing pattern to avoid discharge of material toward roads, sidewalks, bystanders and the like. Also, avoid discharging material against a wall or obstruction, which may cause discharged material to ricochet back toward the operator.
5. To help avoid blade contact or a thrown object injury, stay in operator zone behind handles and keep children, bystanders, helpers and pets at least 75 feet from mower while it is in operation. Stop machine if anyone enters area.
6. Always wear safety glasses or safety goggles during operation and while performing an adjustment or repair to protect your eyes. Thrown objects which ricochet can cause serious injury to the eyes.
7. Wear sturdy, rough-soled work shoes and close-fitting slacks and shirts. Shirts and pants that cover the arms and legs and steel-toed shoes are recommended. Never operate this machine in bare feet, sandals, slippery or light-weight (e.g. canvas) shoes.
8. Do not put hands or feet near rotating parts or under cutting deck. Contact with blade can amputate hands and feet.
9. A missing or damaged discharge cover can cause blade contact or thrown object injuries.
10. Many injuries occur as a result of the mower being pulled over the foot during a fall caused by slipping or tripping. Do not hold on to the mower if you are falling; release the handle immediately.
11. Never pull the mower back toward you while you are walking. If you must back the mower away from a wall or obstruction first look down and behind to avoid tripping and then follow these steps:
    a. Step back from mower to fully extend your arms.
    b. Be sure you are well balanced with sure footing.
    c. Pull the mower back slowly, no more than half way toward you.
    d. Repeat these steps as needed.
12. Do not operate the mower while under the influence of alcohol or drugs.
13. Do not engage the self-propelled mechanism on units so equipped while starting engine.
14. The blade control handle is a safety device. Never attempt to bypass its operation. Doing so makes the safety device inoperative and may result in personal injury through contact with the rotating blade. The blade control handle must operate easily in both directions and automatically return to the disengaged position when released.
15. Never operate the mower in wet grass. Always be sure of your footing. A slip and fall can cause serious personal injury. If you feel you are losing your footing, release the blade control handle immediately and the blade will stop rotating within three seconds.
16. Mow only in daylight or good artificial light. Walk, never run.
17. Stop the blade when crossing gravel drives, walks or roads.
18. If the equipment should start to vibrate abnormally, stop the engine and check immediately for the cause. Vibration is generally a warning of trouble.

19. Shut the engine off and wait until the blade comes to a complete stop before removing the grass catcher or unclogging the chute.
    The cutting blade continues to rotate for a few seconds after the engine is shut off. Never place any part of the body in the blade area until you are sure the blade has stopped rotating.
20. Never operate mower without proper trail shield, discharge cover, grass catcher, blade control handle or other safety protective devices in place and working. Never operate mower with damaged safety devices. Failure to do so can result in personal injury.
21. Muffler and engine become hot and can cause a burn. Do not touch.
22. Only use parts and accessories made for this machine by manufacturer. Failure to do so can result in personal injury.
23. If situations occur which are not covered in this manual, use care and good judgment. Contact your dealer for assistance.

Slope Operation

Slopes are a major factor related to slip and fall accidents, which can result in severe injury. Operation on slopes requires extra caution. If you feel uneasy on a slope, do not mow it. For your safety, use the slope gauge included as part of this manual to measure slopes before operating this unit on a sloped or hilly area. If the slope is greater than 15 degrees, do not mow it.

Do:

1. Mow across the face of slopes; never up and down. Exercise extreme caution when changing direction on slopes.
2. Watch for holes, ruts, rocks, hidden objects, or bumps which can cause you to slip or trip. Tall grass can hide obstacles.
3. Always be sure of your footing. A slip and fall can cause serious personal injury. If you feel you are losing your balance, release the blade control handle immediately, and the blade will stop rotating within 3 seconds.

Do Not:

1. Do not mow near drop-offs, ditches or embankments, you could lose your footing or balance.
2. Do not mow slopes greater than 15 degrees as shown on the slope gauge.
3. Do not mow on wet grass. Unstable footing could cause slipping.

Service

Safe Handling Of Gasoline:

1. To avoid personal injury or property damage use extreme care in handling gasoline. Gasoline is extremely flammable and the vapors are explosive. Serious personal injury can occur when gasoline is spilled on yourself or your clothes, which can ignite. Wash your skin and change clothes immediately.
2. Use only an approved gasoline container.
3. Never fill containers inside a vehicle or on a truck or trailer bed with a plastic liner. Always place containers on the ground away from your vehicle before filling.
4. Remove gas-powered equipment from the truck or trailer and refuel it on the ground. If this is not possible, then refuel such equipment on a trailer with a portable container, rather than from a gasoline dispenser nozzle.
5. Keep the nozzle in contact with the rim of the fuel tank or container opening at all times until fueling is complete. Do not use a nozzle lock-open device.
6. Extinguish all cigarettes, cigars, pipes and other sources of ignition.
7. Never fuel machine indoor because flammable vapors will accumulate in the area.
8. Never remove gas cap or add fuel while engine is hot or running. Allow engine to cool at least two minutes before refueling.
9. Never over fill fuel tank. Fill tank to no more than ½ inch below bottom of filler neck to provide for fuel expansion.
10. Replace gasoline cap and tighten securely.
11. If gasoline is spilled, wipe it off the engine and equipment. Move unit to another area. Wait 5 minutes before starting engine.
12. Never store the machine or fuel container near an open flame, spark or pilot light as on a water heater, space heater, furnace, clothes dryer or other gas appliances.
13. To reduce fire hazard, keep mower free of grass, leaves, or other debris build-up. Clean up oil or fuel spillage and remove any fuel soaked debris.
14. Allow a mower to cool at least 5 minutes before storing.

General Service:

1. Never run an engine indoors or in a poorly ventilated area. Engine exhaust contains carbon monoxide, an odorless and deadly gas.
2. Before cleaning, repairing, or inspecting, make certain the blade and all moving parts have stopped. Disconnect the spark plug wire and ground against the engine to prevent unintended starting.
3. Check the blade and engine mounting bolts at frequent intervals for proper tightness. Also, visually inspect blade for damage (e.g., bent, cracked, worn) Replace blade with the original equipment manufacture's (O.E.M.) blade only, listed in this manual. "Use of parts which do not meet the original equipment specifications may lead to improper performance and compromise safety!"
4. Mower blades are sharp and can cut. Wrap the blade or wear gloves, and use extra caution when servicing them.
5. Keep all nuts, bolts, and screws tight to be sure the equipment is in safe working condition.
6. Never tamper with safety devices. Check their proper operation regularly.
7. After striking a foreign object, stop the engine, disconnect the spark plug wire and ground against the engine. Thoroughly inspect the mower for any damage. Repair the damage before starting and operating the mower.
8. Never attempt to make a wheel or cutting height adjustment while the engine is running.
9. Grass catcher components, discharge cover, and trail shield are subject to wear and damage which could expose moving parts or allow objects to be thrown. For safety protection, frequently check components and replace immediately with original equipment manufacturer's (O.E.M.) parts only, listed in this manual. "Use of parts which do not meet the original equipment specifications may lead to improper performance and compromise safety!"
10. Do not change the engine governor setting or over-rev the engine. The governor controls the maximum safe operating speed of the engine.
11. Maintain or replace safety labels, as necessary.
12. Observe proper disposal laws and regulations. Improper disposal of fluids and materials can harm the environment.

2

Safe Operation Practices



WARNING

This symbol points out important safety instructions, which if not followed, could endanger the personal safety and/or property of yourself and others. Read and follow all instructions in this manual before attempting to operate this machine. Failure to comply with these instructions may result in personal injury. When you see this symbol.
HEED IT'S WARNING!

Your Responsibility
Restrict the use of this power machine to persons who read, understand and follow the warnings and instructions in this manual and on the machine.

3

Setup and Adjustment

NOTE: Stand behind the mower as if you were going to operate it. Your right hand corresponds to the right side of the mower; your left hand corresponds to the left side of the mower.

NOTE: Your mower is shipped with the handle in the higher height position.

NOTE: Each end of the lower handle must be placed in the same relative position.

IMPORTANT

DO NOT crimp the cables when lifting the handle up. Make sure to route the cables inside the lower handle.

IMPORTANT

This unit is shipped without gasoline or oil in the engine. Fill up gasoline and oil as instructed in the accompanying engine manual **BEFORE** operating your mower.

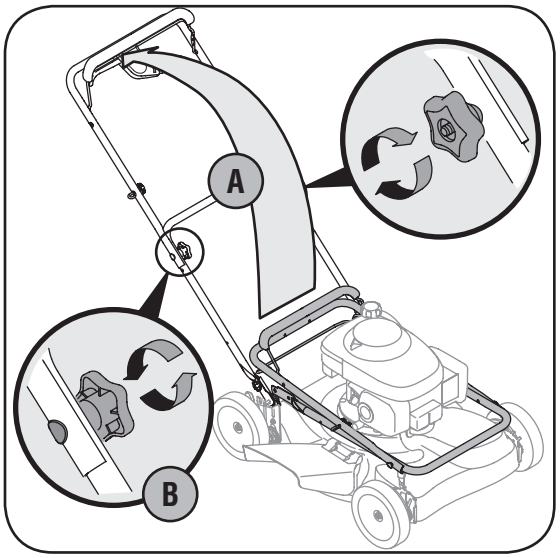

Figure 3-1

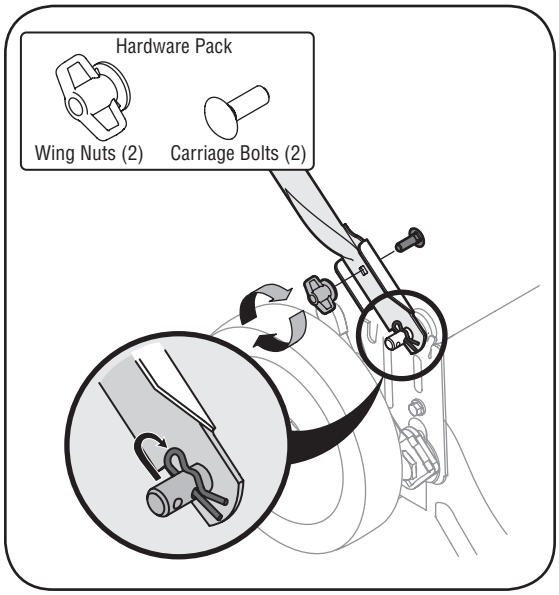

Figure 3-2

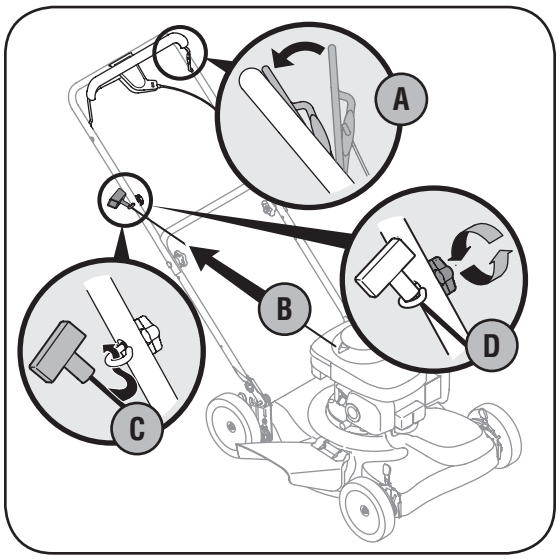

Figure 3-3

1. Remove any packing material which may be between upper and lower handles.
   a. Pull up and back on upper handle as shown in Figure 3-1. Make certain the lower handle is seated securely into the handle mounting brackets.
   b. Tighten hand knobs securing upper handle to lower handle. Make sure that each carriage bolt is seated properly in the handle.
2. Locate hairpin clip in one hole on the weld pin on each side of lower handle.
   a. Remove hairpin clip from this hole. Using a pair of pliers, insert hairpin clip into the other hole on the weld pin. See Figure 3-2. Repeat on other side.
   b. Insert a carriage bolt from the hardware pack into the upper hole on the handle mounting bracket. Secure with one plastic wing nut, also included in the hardware pack. Repeat on other side with remaining items from hardware pack.
3. The rope guide is attached to the right side of the upper handle. Loosen the wing nut which secures the rope guide.
   a. Hold the blade control against upper handle.
   b. Pull starter rope out of the engine. Release the blade control. See Figure 3-3.
   c. Slip starter rope into rope guide.
   d. Tighten wing nut.
4. Insert post on cable ties into holes provided on the lower handle. Pull cable tie tight and trim excess.
5. An adjusting plate and thumb lever at each wheel position provides cutting height adjustment.
   a. Depress lever towards wheel.
   b. Move it to any of the nine positions for desired cutting height. See Figure 3-4.
   c. Release lever towards mower deck.

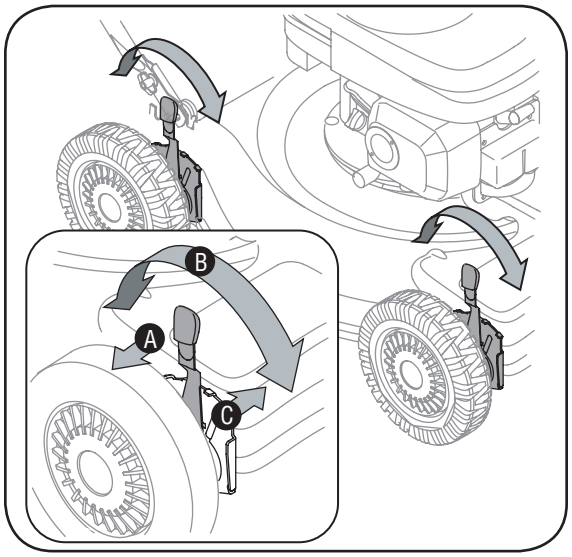

Figure 3-4

6. Follow steps below to assemble the grass catcher:
   a. Place bag over frame so that its black plastic side is at the bottom. See Figure 3-5.
   b. Slip plastic channel of grass bag over hooks on the frame. All the plastic channels except center top of bag attach from outside of bag.
   c. Attach center top of bag from inside of bag.
7. Follow steps below to attach grass catcher:
   a. Lift rear discharge door.
   b. Place grass catcher on the pivot rod. Let go of discharge door so that it rests on the grass catcher. See Figure 3-6.

To remove grass catcher or convert to a mulcher, lift rear discharge door on the mower as shown in Figure 3-6. Lift grass catcher up and out of the pivot rod. Release rear discharge door to allow it to close rear opening of mower.

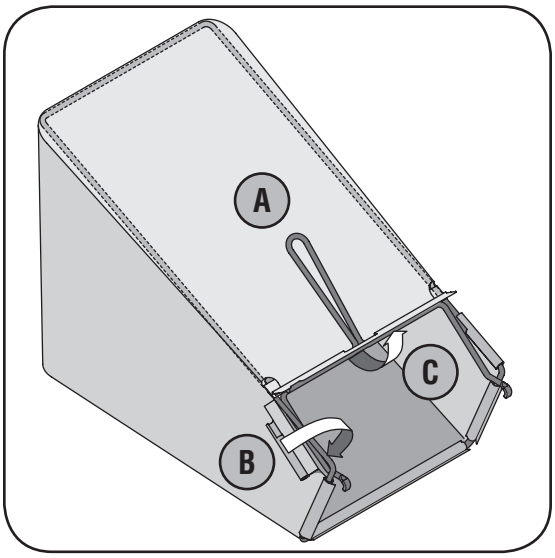

Figure 3-5

WARNING: Never operate mower unless the hooks on the grass catcher are firmly seated in the slots on the handle bracket assemblies, and the rear discharge door rests firmly against top of the grass catcher.

8. If converting to side discharge, make sure grass catcher is off unit and rear discharge door is closed.
   a. Lift mulching plug on the right side of mower.
   b. Slide two hooks of side discharge chute under the hinge pin on the mulching plug assembly and lower the side mulching plug. See Figure 3-7.

NOTE: Do not remove the side mulching plug at any time, even when you are not mulching.

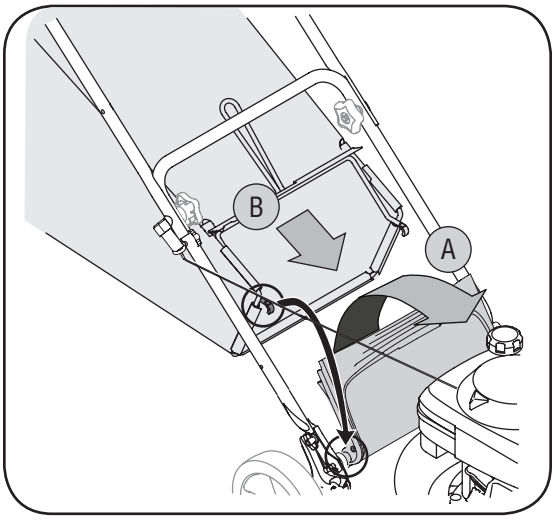

Figure 3-6

9. The adjustment wheel is located in the drive control handle housing and is used to tighten or loosen the drive belt. You will have to adjust the drive control if any of the following happens:
   a. The mower does not propel itself with the drive control engaged.
   b. The mower's drive wheels hesitate with the drive control engaged.

If either of these conditions occur, rotate the adjustment wheel clockwise to tighten and counter-clockwise to loosen the cable to adjust drive control. See Figure 3-8.

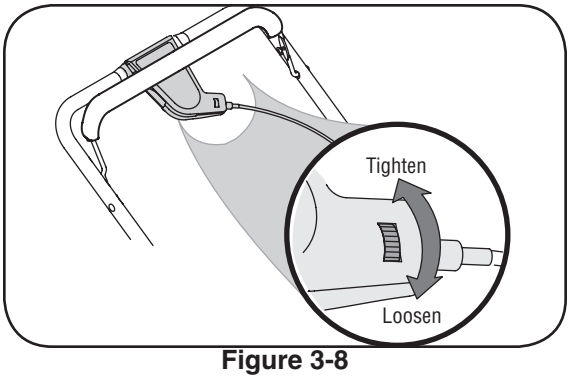

Figure 3-8

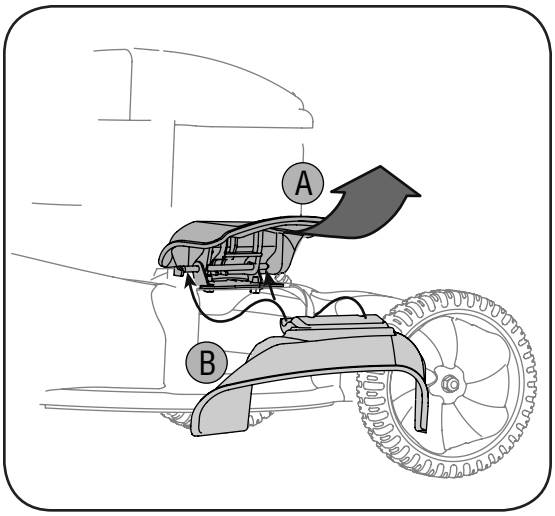

Figure 3-7

3

Setup and Adjustment

WARNING

Never operate mower unless the hooks on the grass catcher are firmly seated in the slots on the handle bracket assemblies, and the rear discharge door rests firmly against top of the grass catcher.

CUTTING HEIGHT
All wheels must be placed in the same relative position.

GRASS CATCHER
Make certain bag is turned right side out before assembling (warning label will be on the outside).

4

Operating Your Lawn Mower

WARNING

The blade control mechanism is a safety device. Never attempt to bypass its operations.

Use extreme care when handling gasoline. Gasoline is extremely flammable and the vapors are explosive. *Never* fuel the machine indoors or while the engine is hot or running. Extinguish cigarettes, cigars, pipes and other sources of ignition.

Keep hands and feet away from the chute area on cutting deck. Refer to warning label on the unit.

Know Your Lawn Mower

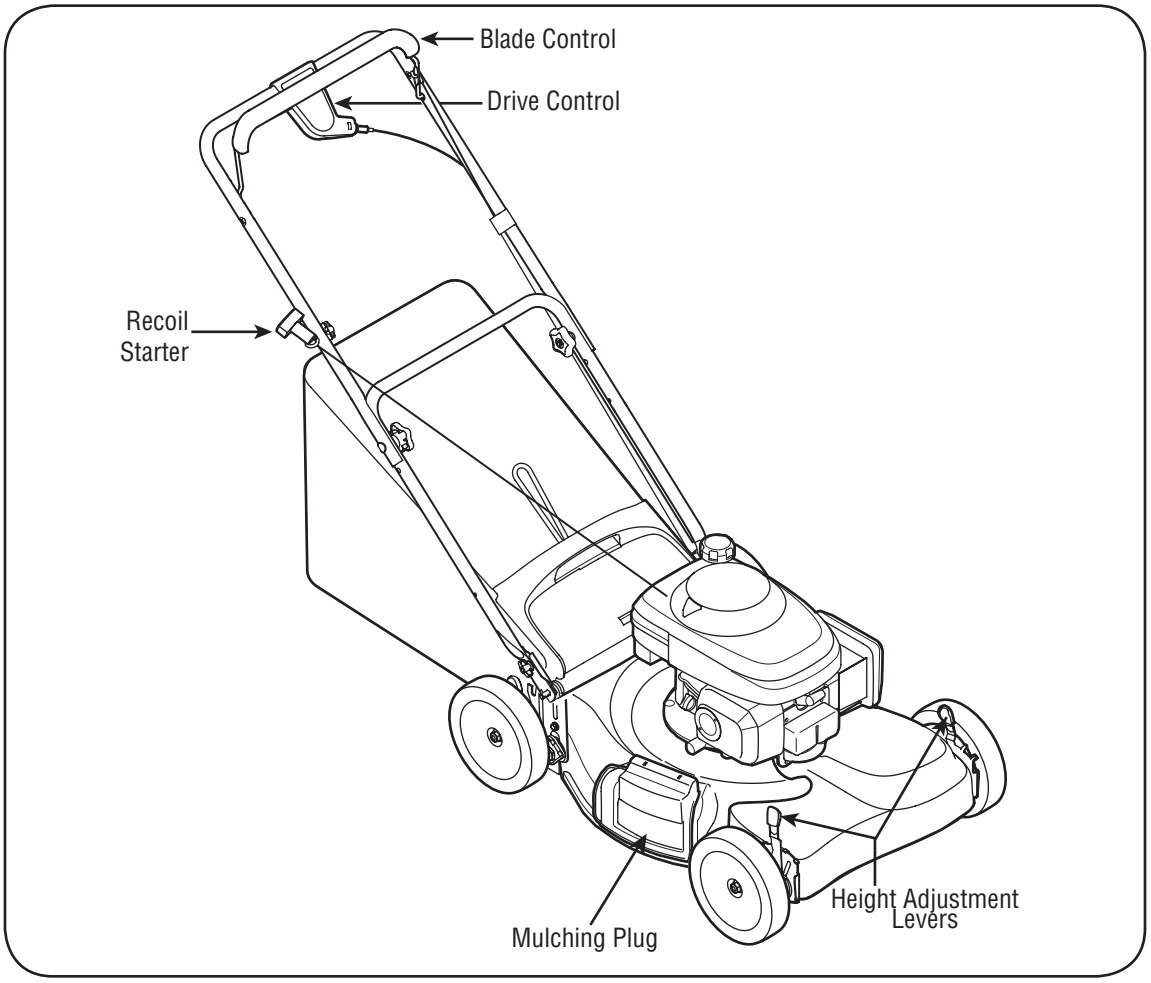

Figure 4-1

Now that you have set up your lawn mower for operation, get acquainted with its controls and features. These are described below and illustrated on this page. This knowledge will allow you to use your new equipment to its fullest potential.

Blade Control

The blade control is attached to the upper handle of the mower. Depress and squeeze it against the upper handle to operate the unit. Release it to stop engine and blade.

WARNING: This blade control mechanism is a safety device. Never attempt to bypass its operations.

Drive Control

The drive control is located on the upper handle. Squeeze the drive control lever to engage the drive system. Release it to disengage the drive system. To slow down when approaching an obstacle, making a turn, or stopping, release the lever. See Figure 4-1.

Cutting Height Adjustment Levers

One adjustment lever is located on each wheel and is used to adjust the cutting height. All four levers have to be at the same relative position to ensure a uniform cut.

Recoil Starter

The recoil starter is attached to the right upper handle. Stand behind the unit and pull the recoil starter rope to start the unit.

Gas and Oil Fill-Up

1. Check oil level and add oil if necessary. Follow engine manual for this.
2. Service the engine with gasoline as instructed in the engine manual. See engine manual for location of oil and gas fill.

WARNING: Use extreme care when handling gasoline. Gasoline is extremely flammable and the vapors are explosive. Never fuel the machine indoors or while the engine is hot or running. Extinguish cigarettes, cigars, pipes and other sources of ignition.

WARNING: The operation of any lawn mower can result in foreign objects being thrown into the eyes, which can damage your eyes severely. Always wear safety glasses while operating the mower, or while performing any adjustments or repairs on it.

Starting Engine

WARNING: Be sure no one other than the operator is standing near the lawn mower while starting engine or operating mower. Never run engine indoors or in enclosed, poorly ventilated areas. Engine exhaust contains carbon monoxide, an odorless and deadly gas. Keep hands, feet, hair and loose clothing away from any moving parts on engine and lawn mower.

1. Place the fuel valve lever found on the left side of the engine into the ON position. See Figure 4-2 inset.
2. Move the choke lever (if equipped) all the way backward into the choke position. Once the engine is warm, the lever will automatically revert to the RUN position. Refer to the engine manual for further details.
3. Standing behind the mower, squeeze the blade control against upper handle. See Figure 4-2.
4. Holding these two handles together firmly, grasp recoil starter handle and pull rope out with a rapid, continuous, full arm stroke. See Figure 4-2. Keeping a firm grip on the starter handle, let the rope rewind slowly. Repeat until engine cranks. Let the rope rewind each time slowly.

Stopping Engine

1. Release blade control to stop the engine and blade.
2. Disconnect spark plug wire from spark plug and ground against the engine.

WARNING: Wait for the blade to stop completely before doing any work on the mower or to remove the grass catcher.

Using Your Lawn Mower

WARNING: Never operate your mower without either the rear door or the entire grass catcher assembly firmly secured.

Be sure lawn is clear of stones, sticks, wire, or other objects which could damage lawn mower or engine. Such objects could be accidently thrown by the mower in any direction and cause serious personal injury to the operator and others.

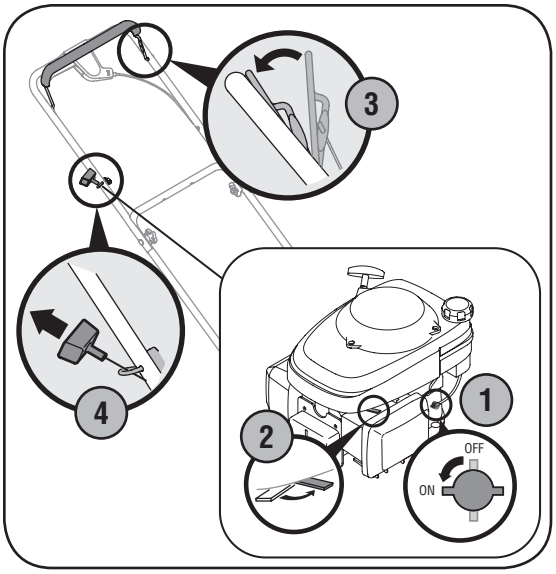

Figure 4-2

WARNING: If you strike a foreign object, stop the engine. Remove wire from the spark plug, thoroughly inspect mower for any damage, and repair damage before restarting and operating. Extensive vibration of mower during operation is an indication of damage. The unit should be promptly inspected and repaired.

1. Once the engine is running, squeeze the drive control against the upper handle to propel mower.
2. For best results, do not cut wet grass.
3. For a healthier lawn, never cut off more than one-third of the total length of the grass.

Using as Mulcher

For mulching grass, remove the grass catcher or side discharge chute from the mower. The rear discharge door should be closed.

1. For effective mulching, do not cut wet grass.
2. New or thick grass may require a narrower cut. Adjust ground speed according to condition of lawn.
3. If the grass has been allowed to grow in excess of 4 inches, mulching is not recommended. Use the grass catcher to bag clippings instead.

Using Grass Catcher

You can use the grass catcher to collect clippings while you are operating the mower.

1. Attach grass catcher following instructions in Set Up. Grass clippings will automatically collect in bag as you run mower. Operate mower till grass bag is full.
2. Stop engine completely by releasing the blade control. Make sure that the unit has come to a complete stop.
3. Lift discharge door and pull grass bag up and away from the mower to dispose of the grass clippings.

4

Operating Your Lawn Mower

WARNING

The operation of any lawn mower can result in foreign objects being thrown into the eyes, which can damage your eyes severely. Always wear safety glasses while operating the mower, or while performing any adjustments or repairs on it.

Be sure no one other than the operator is standing near the lawn mower while starting engine or operating mower. Never run engine indoors or in enclosed, poorly ventilated areas. Engine exhaust contains carbon monoxide, an odorless and deadly gas. Keep hands, feet, hair and loose clothing away from any moving parts on engine and lawn mower.

5

Maintaining Your Lawn Mower

WARNING

Always stop engine, disconnect spark plug, and ground against engine before cleaning, lubricating or doing any kind of maintenance on your machine.

We do not recommend the use of pressure washers or garden hose to clean your unit. These may cause damage to pulleys, bearings, or the engine. The use of water will result in shortened life and reduce service-ability.

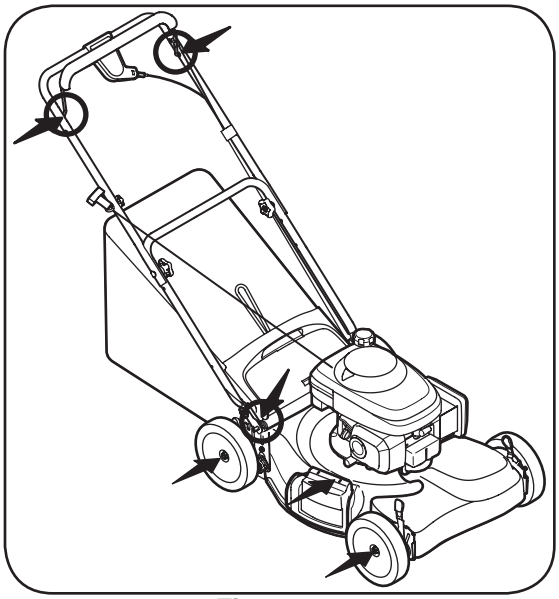

Figure 5-1

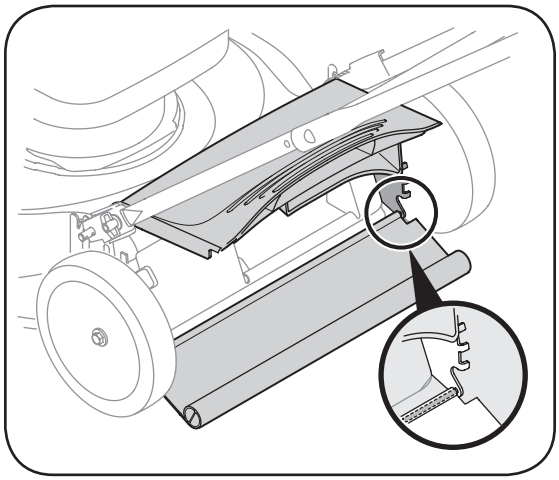

Figure 5-2

General Recommendations

1. Always observe safety rules when performing any maintenance.
2. The warranty on this lawn mower does not cover items that have been subjected to operator abuse or negligence. To receive full value from warranty, operator must maintain the lawn mower as instructed here.
3. Changing of engine-governed speed will void engine warranty.
4. All adjustments should be checked at least once each season.
5. Periodically check all fasteners and make sure these are tight.

WARNING: Always stop engine, disconnect spark plug, and ground against engine before cleaning, lubricating or doing any kind of maintenance on your machine.

Lubrication

1. Lubricate pivot points on the blade control at least once a season with light oil. The blade control must operate freely in both directions. See Figure 5-1.
2. Lubricate the wheels at least once a season with light oil (or motor oil). If wheels are removed for any reason, lubricate surface of the pivot arm and inner surface of the wheel with light oil. See Figure 5-1.
3. Lubricate the torsion spring and pivot point on the rear discharge door and side mulch plug periodically with light oil to prevent rust. See Figure 5-1.
4. The transmission is pre-lubricated and sealed at the factory and does not require lubrication.
5. Follow the accompanying engine manual for lubrication schedule and instruction for engine lubrication.

Deck Care

1. Disconnect spark plug wire. Drain gasoline from lawn mower, or place a piece of plastic under the gas cap.
2. Tip mower so that it rests on the housing. Keep the side with the air cleaner facing up. Hold mower firmly.

WARNING: Never tip the mower more than 90 degrees in any directions and do not leave the mower tipped for any length of time. Oil can drain into the upper part of the engine causing a starting problem.

3. Scrape and clean the underside of the deck with a suitable tool. Do not spray with water.
4. Put the mower back on its wheels on the ground. If you had put plastic under the gas cap earlier, make sure to remove it now.

Engine Care

1. Maintain oil level as instructed in engine manual.
2. Service air cleaner every 25 hours under normal conditions. Clean every few hours under extremely dusty conditions. Refer to engine manual.
3. Clean spark plug and reset the gap once a season. Check engine manual for correct plug type and gap specifications.
4. Clean engine regularly with a cloth or brush. Keep the cooling system (blower housing area) clean to permit proper air circulation. Remove all grass, dirt and combustible debris from muffler area.

Replacing Rear Flap

1. To remove rear flap, lift rear door, and press flap in on either side to remove from hole. See Figure 5-2.
2. Remove flap from opposite hole and replace with new flap in the opposite order and manner of removal.

Blade Care

WARNING: When removing cutting blade for sharpening or replacement, protect your hands with a pair of heavy gloves or use a heavy rag to hold blade.

1. Disconnect spark plug wire from spark plug. Turn mower on its side making sure that the air filter and the carburetor are up.
2. Remove bolt, blade bell support, blade, and blade adapter from the engine crankshaft. See Figure 5-3.

NOTE: When removing these items, the pulleys and washers may also break free from the crankshaft. Be sure to make note of the orientation of these items for reassembly.

3. The blade can be sharpened with a file or on a grinding wheel. Do not attempt to sharpen the blade while it is still on the mower. When sharpening blade, follow original angle of grind. Grind cutting edges equally to keep blade balanced.
4. Remove blade from the adapter for testing balance. Balance the blade on a round shaft screwdriver to check. Remove metal from the heavy side until it balances evenly.

WARNING: An unbalanced blade will cause excessive vibration when rotating at high speeds. It may cause damage to mower, and could break causing personal injury.

5. Lubricate the engine crankshaft and the inner surface of the blade adapter with light oil. Slide the blade adapter onto the engine crankshaft. Place the blade on the adapter such that the side of the blade marked "Bottom" (or with part number) faces the ground when the mower is in the operating position. Make sure that blade is aligned and seated on blade adapter flanges.
6. Place blade bell support on the blade. Align notches on the blade bell support with small holes in blade. Replace hex bolt and tighten hex bolt to torque: 450 in. lbs. min., 600 in. lbs. max.

To ensure safe operation of your mower, periodically check the blade bolt for correct torque.

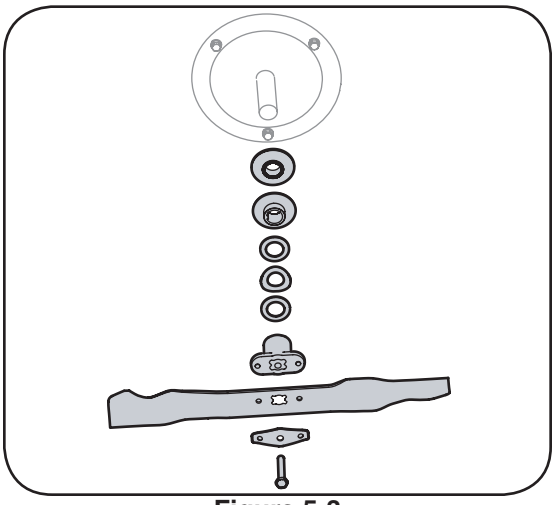

Figure 5-3

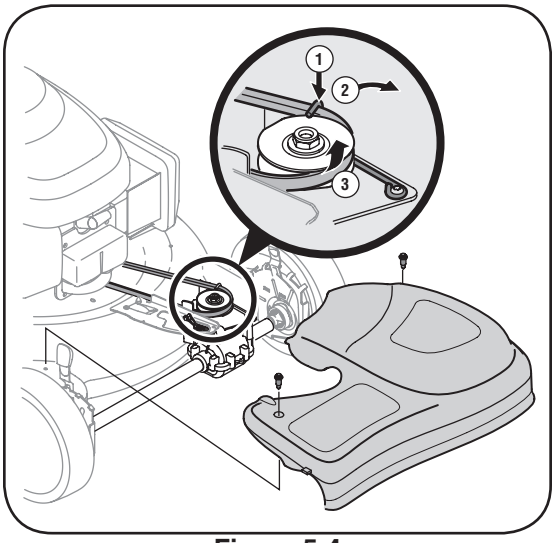

Figure 5-4

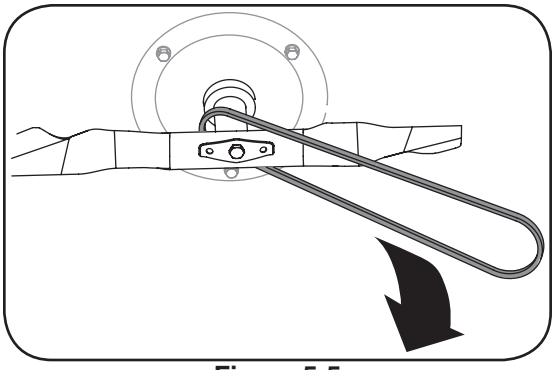

Figure 5-5

Belt Care

1. Remove two shoulder screws securing front drive cover to mower deck. See Figure 5-4. Press inward on sides of front drive cover and release tabs that secure it to the height adjuster brackets. Remove drive cover from mower.
2. Pull up on the belt keeper wire and pivot it out away from the drive pulley. See Figure 5-4 inset.
3. Roll the belt off the transmission pulley. Tip mower on its side with the air filter up to access belt from underside of mower. Slide belt off of engine pulley and thread through the opening in the belt keeper bracket. Then remove the belt from around the blade by removing over one end at a time. See Figure 5-5.
4. Replace with new belt, working around blade and up through the belt keeper bracket. Make sure belt is firmly seated on engine pulley while pulling from the other side and sliding it around the transmission pulley. Pivot the belt keeper wire back into its operating position and snap into the slot provided. Reassemble front drive cover.

5

Maintaining Your Lawn Mower

WARNING

When removing the cutting blade for sharpening or replacement or when sliding the belt around it, protect your hands with a pair of heavy gloves or use a heavy rag to hold the blade.

An unbalanced blade will cause excessive vibration when rotating at high speeds. It may cause damage to mower, and could break causing personal injury.

6

Trouble Shooting



For repairs beyond the minor adjustments listed here, contact an authorized service dealer.

Problem	Cause	Remedy
Engine fails to start	1. Blade control disengaged. 2. Spark plug wire disconnected. 3. Fuel tank empty or stale fuel. 4. Engine not primed (if equipped with primer). 5. Faulty spark plug. 6. Blocked fuel line. 7. Engine flooded. 8. Fuel valve (if equipped) closed. 9. Engine not choked (if equipped w/choke).	1. Engage blade control. 2. Connect wire to spark plug. 3. Fill tank with clean, fresh gasoline. 4. Prime engine as instructed in "Operating Your Lawn Mower". 5. Clean, adjust gap, or replace. 6. Clean fuel line. 7. Wait a few minutes to restart, but do not prime. 8. Open fuel valve. See engine manual. 9. Choke engine. See engine manual.
Engine runs erratic	1. Spark plug wire loose. 2. Blocked fuel line or stale fuel. 3. Vent in gas cap plugged. 4. Water or dirt in fuel system. 5. Dirty air cleaner. 6. Carburetor out of adjustment.	1. Connect and tighten spark plug wire. 2. Clean fuel line; fill tank with clean, fresh gasoline. 3. Clear vent. 4. Drain fuel tank. Refill with fresh fuel. 5. Refer to engine manual. 6. Refer to engine manual.
Engine overheats	1. Engine oil level low. 2. Air flow restricted. 3. Carburetor not adjusted properly.	1. Fill crankcase with proper oil. 2. Remove blower housing and clean. 3. Refer to engine manual.
Occasional skips (hesitates) at high speed	1. Spark plug gap too close. 2. Carburetor idle mixture adjustment improperly set.	1. Adjust gap to .030". 2. Refer to engine manual.
Idles poorly	1. Spark plug fouled, faulty or gap too wide. 2. Carburetor improperly adjusted. 3. Dirty air cleaner.	1. Reset gap to .030" or replace spark plug. 2. Refer to engine manual. 3. Refer to engine manual.
Excessive Vibration	1. Cutting blade loose or unbalanced. 2. Bent cutting blade.	1. Tighten blade and adapter. Balance blade. 2. See an authorized service dealer.
Mower will not mulch grass (If Equipped)	1. Wet grass. 2. Excessively high grass. 3. Dull blade.	1. Do not mow when grass is wet; wait until later to cut. 2. Mow once at a high cutting height, then mow again at desired height or make a narrower cutting path. 3. Sharpen or replace blade.
Uneven cut	1. Wheels not positioned correctly. 2. Dull blade.	1. Place all four wheels in same height position. 2. Sharpen or replace blade.
Mower will not self propel	1. Belt not installed properly. 2. Debris clogging drive operation. 3. Damaged or worn belt.	1. Check belt for proper pulley installation and movement. 2. Stop engine, disconnect spark plug wire and clean out debris. 3. Inspect and replace belt.

Off-Season Storage

The following steps should be taken to prepare your lawn mower for storage.

1. Clean and lubricate mower thoroughly as described in the lubrication instructions.
2. We do not recommend the use of a pressure washer or garden hose to clean your unit.
3. Refer to engine manual for correct engine storage instructions.
4. Coat mower's cutting blade with chassis grease to prevent rusting.
5. Store mower in a dry, clean area. Do not store next to corrosive materials, such as fertilizer.

When storing any type of power equipment in a poorly ventilated or metal storage shed, care should be taken to rust-proof the equipment. Using a light oil or silicone, coat the equipment, especially cables and all moving parts of your lawn mower before storage.

7

Off Season Storage and Safety Labels



WARNING

DO NOT remove safety (or any) labels from mower for any reason.

Safety Labels Found On Your Lawn Mower





Model V469

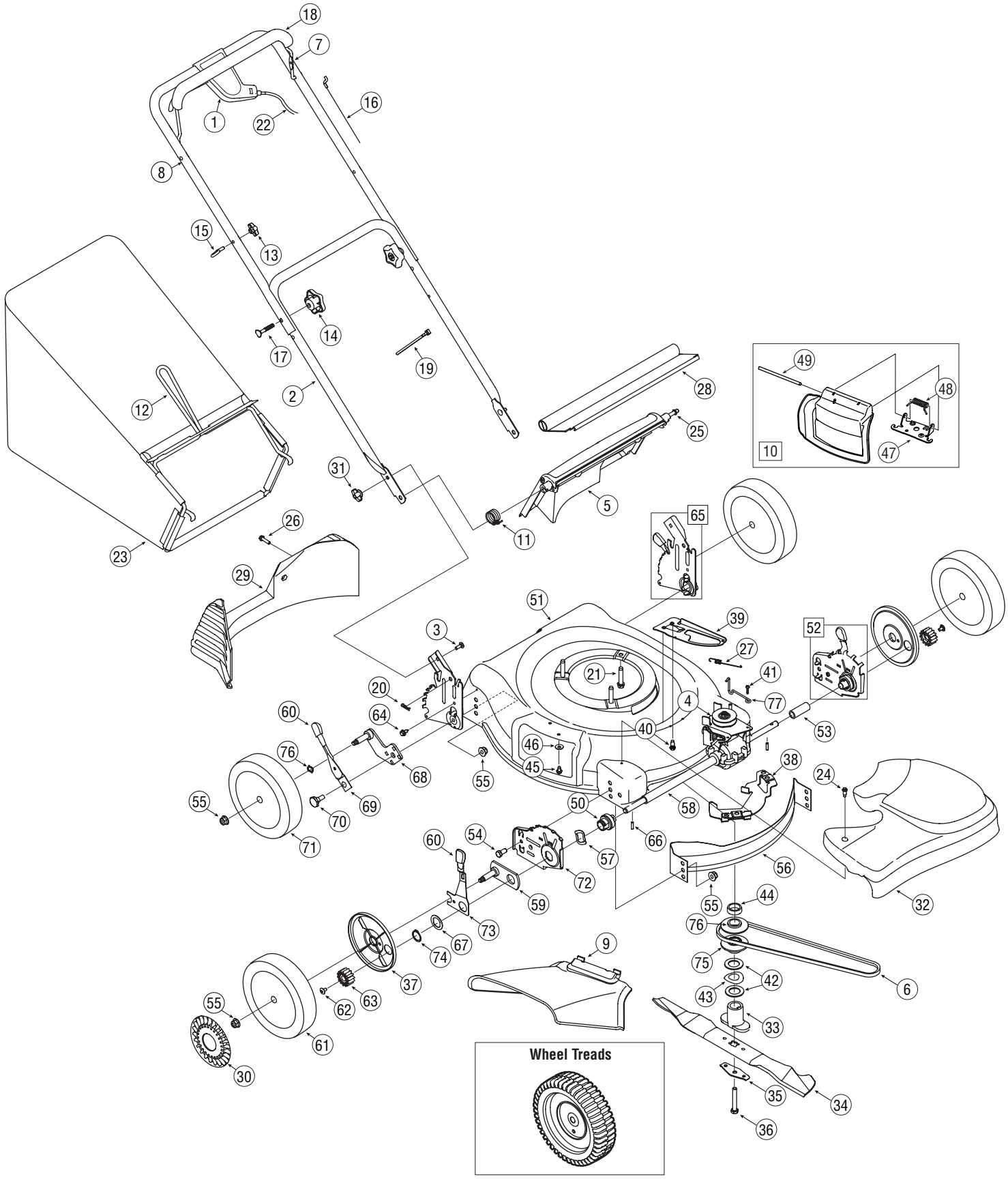

Ref.	Part No.	Description
1	753-05096A	Drive Control Assembly
2	749-0928A	Lower Handle
3	710-0703	Carriage Bolt 1/4-20
4	617-04377A	Transmission Assembly
5	731-05865	Rear Discharge Door
6	754-04082A	V-Belt
7	747-1161A	Blade Control
8	749-04206	Upper Handle
9	731-04177	Chute Deflector
10	687-02055	Mulch Plug Complete
11	732-04090A	Torsion Spring - RH
12	747-04080	Grass Bag Frame
13	720-0279	Handle Knob
14	720-04072	Handle Knob
15	710-1205	Eye Bolt
16	746-0957	Control Cable
17	710-1174	Carriage Bolt 5/16-18 x 2.0
18	731-05564	Bail Cover
19	726-0240	Cable Tie
20	714-0104	Cotter Pin
21	710-0654A	Self-Tapping Sems Screw
22	746-04206A	Drive Cable
23	664-04054	Grassbag
24	710-1650	Shoulder Screw # 12 -24
25	747-04587	Pivot Rod
26	710-1241	Screw, 1/4-15 x 1.00
27	732-04317	Extension Spring
28	731-05642	Rear Trailing Shield
29	731-04150C	Rear Baffle
30	731-0982A	Hub Cap
31	712-0397	Wing Nut
32	731-05013A	Transmission Cover
33	748-04082	Blade Adapter
34	742-0741	21” Mulching Blade
35	736-0524B	Blade Bell Support
36	710-1257	Hex Screw 3/8-24 x 2.50
37	782-7551A	Wheel Dust Cap
38	787-01265A	Belt Keeper Bracket
39	787-01258A	Cable Mount Bracket
40	710-0896	Screw, 1/4-14 x .625
41	710-04329	Screw, .159 OD x .610
42	736-0277	Washer, Flat, 1.031 x 1.620 x .095

Ref.	Part No.	Description
43	736-0447	Washer, Wave, 1.5 x 1.0 x .029
44	750-04438A	Spcr., Slev., 25mm x 1.375 x .620
45	710-0599	TT Screw 1/4-20 x 0.5
46	736-0270	Bell Washer.265 x 0.75
47	17032A	Deflector Chute Adapter
48	732-1014	Torsion Spring
49	747-0710	Hinge Pin
50	682-0015	Bearing Assembly
51	787-01278	21” Deck
52	687-02194	Height Adjustment Ass’y - RH
	687-02193	Height Adjustment Ass’y - LH
53	750-04405	Sleeve Spacer, 1.8” Lg.
54	710-0216	Hex Screw, 3/8-16 x.75
55	712-04065	Flange Lock Nut, 3/8-16
56	782-5002B	Front Baffle
57	736-0447	Wave Washer
58	750-04404	Sleeve Spacer, 9.10” Lg.
59	687-02044	Pivot Plate Assembly
60	720-0426	Adjustment Knob
61	734-04223	Front Wheel, 8 x 2.125
62	710-04531	Screw, 1/4-20 x .390
63	717-1762	Gear 14T RH FWD
	717-1761	Gear 14T LH FWD
64	710-1652	TT Scr. w/Washer 1/4-20 x.625
65	687-02271	Handle Bracket Assembly - RH
	687-02270	Handle Bracket Assembly - LH
66	715-0221	Dowel Pin
67	736-0474	Washer
68	687-02071A	Pivot Arm Assembly - RH
	687-02070A	Pivot Arm Assembly - LH
69	732-04175	Rear Spring Lever
70	738-0507B	Shoulder Scr., 500 Dia. x. 434
71	734-04226	Rear Wheel, 8 x 2.125
72	787-01298	Height Adjuster Plate - RH
	787-01299	Height Adjuster Plate - LH
73	732-0706	Front Lever - RH
	732-0707	Front Lever - LH
74	716-0102	Snap Ring
75	756-04160	Key Half Pulley
76	756-04161	Upper Half Pulley
77	732-04294	Belt Keeper Wire

8

Parts List

To order replacement parts, call the Customer Dealer Referral Line at 1-877-282-8684, or visit www.cubcadet.com to find the nearest Cub Cadet service dealer in your area.

IMPORTANT

For a proper working machine, use Factory Approved Parts. **V-BELTS** are specially designed to engage and disengage safely. A substitute (non OEM) V-Belt can be dangerous by not disengaging completely.

MANUFACTURER'S LIMITED WARRANTY FOR

Cub Cadet®

The limited warranty set forth below is given by Cub Cadet LLC with respect to new merchandise purchased and used in the United States, its possessions and territories.

"Cub Cadet" warrants this product against defects in material and workmanship for a period of three (3) years commencing on the date of original purchase and will, at its option, repair or replace, free of charge, any part found to be defective in materials or workmanship. This limited warranty shall only apply if this product has been operated and maintained in accordance with the Operator's Manual furnished with the product, and has not been subject to misuse, abuse, commercial use, neglect, accident, improper maintenance, alteration, vandalism, theft, fire, water, or damage because of other peril or natural disaster. Damage resulting from the installation or use of any part, accessory or attachment not approved by Cub Cadet for use with the product(s) covered by this manual will void your warranty as to any resulting damage.

Normal wear parts are warranted to be free from defects in material and workmanship for a period of thirty (30) days from the date of purchase. Normal wear parts include, but are not limited to items such as: batteries, belts, blades, blade adapters, grass bags, rider deck wheels, seats, snow thrower skid shoes, shave plates, auger spiral rubber and tires.

HOW TO OBTAIN SERVICE: Warranty service is available, WITH PROOF OF PURCHASE, through your local authorized service dealer. To locate the dealer in your area, check your Yellow Pages, or contact Cub Cadet LLC at P.O. Box 361131, Cleveland, Ohio 44136-0019, or call 1-877-282-8684, or log on to our Web site at www.cubcadet.com.

This limited warranty does not provide coverage in the following cases:

a. The engine or component parts thereof. These items may carry a separate manufacturer's warranty. Refer to applicable manufacturer's warranty for terms and conditions.

b. Log splitter pumps, valves, and cylinders have a separate one year warranty.

c. Routine maintenance items such as lubricants, filters, blade sharpening, tune-ups, brake adjustments, clutch adjustments, deck adjustments, and normal deterioration of the exterior finish due to use or exposure.

d. Cub Cadet does not extend any warranty for products sold or exported outside of the United States, its possessions and territories, except those sold through Cub Cadet's authorized channels of export distribution

e. Replacement parts that are not genuine Cub Cadet parts.

f. Service completed by someone other than an authorized service dealer.

g. Transportation charges and service calls.

No implied warranty, including any implied warranty of merchantability of fitness for a particular purpose, applies after the applicable period of express written warranty above as to the parts as identified. No other express warranty, whether written or oral, except as mentioned above, given by any person or entity, including a dealer or retailer, with respect to any product, shall bind Cub Cadet. During the period of the warranty, the exclusive remedy is repair or replacement of the product as set forth above.

The provisions as set forth in this warranty provide the sole and exclusive remedy arising from the sale. Cub Cadet shall not be liable for incidental or consequential loss or damage including, without limitation, expenses incurred for substitute or replacement lawn care services or for rental expenses to temporarily replace a warranted product.

Some states do not allow the exclusion or limitation of incidental or consequential damages, or limitations on how long an implied warranty lasts, so the above exclusions or limitations may not apply to you.

In no event shall recovery of any kind be greater than the amount of the purchase price of the product sold. **Alteration of safety features of the product shall void this warranty.** You assume the risk and liability for loss, damage, or injury to you and your property and/or to others and their property arising out of the misuse or inability to use the product.

This limited warranty shall not extend to anyone other than the original purchaser or to the person for whom it was purchased as a gift.

HOW STATE LAW RELATES TO THIS WARRANTY: This limited warranty gives you specific legal rights, and you may also have other rights which vary from state to state.

IMPORTANT: Owner must present Original Proof of Purchase to obtain warranty coverage.

Cub Cadet LLC, P.O. BOX 361131 CLEVELAND, OHIO 44136-0019; Phone: 1-877-282-8684