Cub Cadet

Illustrated Parts Manual

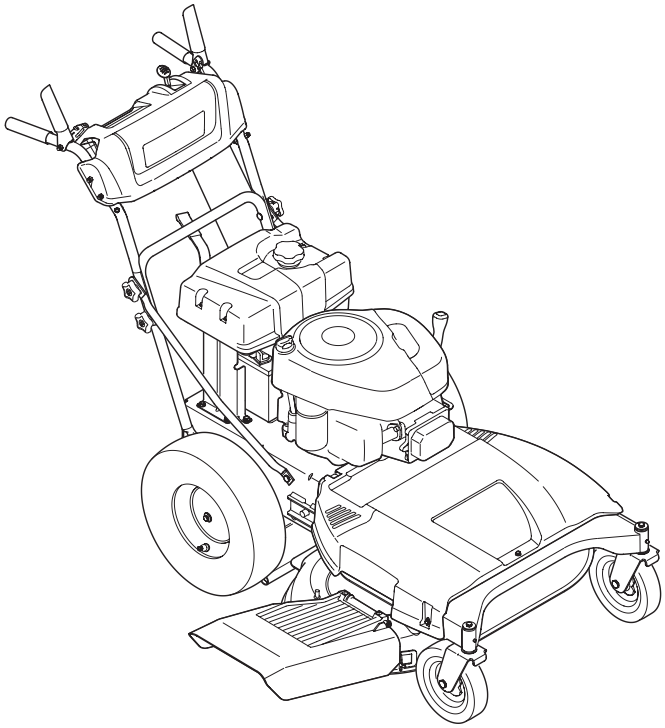

33 Inch / Wide Cut Mower

CUB CADET LLC, P.O. BOX 361131 CLEVELAND, OHIO 44136-0019

Printed In USA

Form No. 769-04833
(February 3, 2009)

Cub Cadet Wide Cut

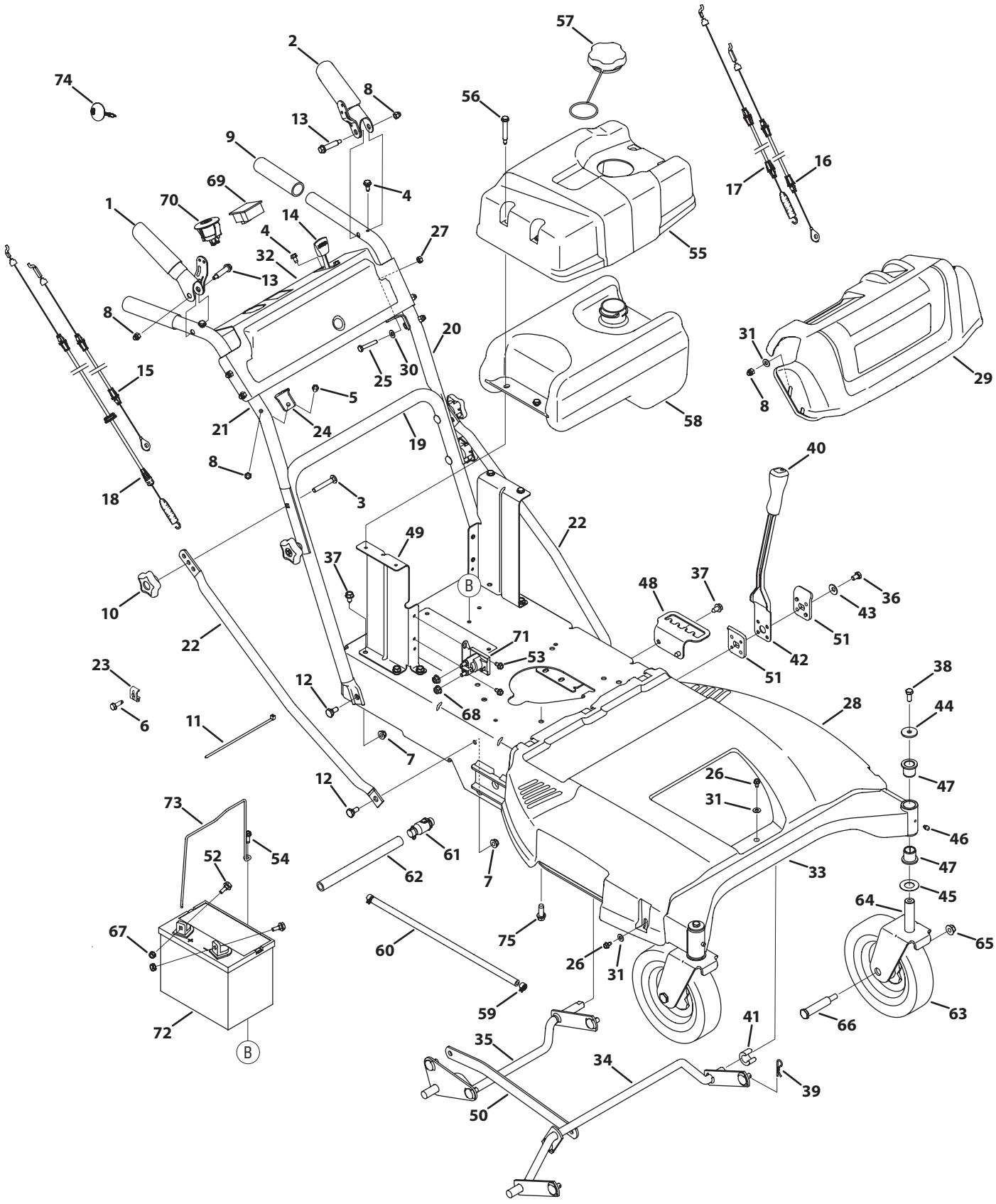

Ref.	Part Number	Description
1	687-02426	Right Hand Lever Assembly Bracket
2	687-02427	Left Hand Lever Assembly Bracket
3	710-0572	Screw, Carriage, 5/16-18 x 2.25
4	710-0599	Screw, 1/4-20 x 0.500
5	710-0606	Hex Screw, 1/4-20 x 1.50
6	710-1237	Screw, #10-32 x 0.625
7	712-04063	Nut, Flangelock, 5/16-18
8	912-0442	Lock Nut Cap, 1/4-20
9	720-0274	Grip, 1.0 ID x 5.0 LG
10	720-04072	Star Knob, 5/16-18
11	725-0157	Cable Tie, 3/16 x .05 x 7.4
12	938-0140	Screw, Shoulder, .435 x .178-5/16 x .56
13	938-1226	Screw, Shoulder, .375 x 1.355 x 1/4-20
14	946-04604	Throttle/Choke Cable, 38.0 x 1.1 EXT
15	946-04606	RH Brake Cable
16	946-04608	LH Brake Cable
17	946-04609	Wheel Clutch Cable
18	946-04610	Deck Clutch Cable
19	749-04330-0637	Lower Handle
20	749-04331-0637	Upper LH Handle
21	749-04332-0637	Upper RH Handle
22	749-04333-0637	Adjustable Handle Brace
23	751B221535	Casing Clamp
24	787-01490A-0637	RH Cable Mount Bracket
	787-01491A-0637	LH Cable Mount Bracket
25	710-0136	Hex Screw, 1/4-20 x 1.75
26	710-0896	Screw, 1/4-14 x 0.625
27	712-3006	Nut, Hex, 1/4-20
28	931-05684	Belt Cover
29	731-05937	Handle Panel, Black
30	736-0270	Washer, Bell, .265 x .75 x .062
31	936-0463	Washer, Flat, .25 x .630 x .0515
32	787-01548-4021	Hour Meter and Key Handle Panel
33	687-02255B-4021	Frame Assembly
34	687-02265-0637	Front Deck Lift Assembly
35	687-02419-0637	Rear Deck Lift Assembly
36	710-04312	Hex Screw, 5/16-18 x .50
37	710-0604A	Screw, 5/16-18 x 0.625
38	710-0627	Hex Screw, 5/16-24 x .750
39	914-0145	Click Pin, .092 x 1.64 LG

Ref.	Part Number	Description
40	720-0311	Grip Handle, 1/2
41	731-05791	Plastic Spacer, .63 ID x .75 LG
42	732-04418A	Deck Height Lever
43	736-0242	Washer, Bell, .340 x .872 x .060
44	736-0343	Washer, Flat, .330 x 1.25 x .120
45	936-0351	Washer, Flat, .760 ID x 1.50 OD
46	937-3000	Drive Lube Fitting, 3/16
47	741-0660A	Flange Bearing, .760 x .941 x 1.0
48	787-01496-4021	Height Adjustment Bracket
49	787-01507-4021	Fuel Tank Mount Bracket
50	787-01510-0637	Link Pivot Bracket
51	787-01521-0637	Lever Pivot Bracket
52	710-04666	Hex Head Flange, 1/4-20 x .75
53	710-0599	Screw, 1/4-20 x 0.500
54	710-0642	Screw, 1/4-20 x 0.750
55	731-05927	Fuel Tank Cover
56	738-04282	Screw, Shoulder, 1/4-20 x .32 x 1.8
57	951-10514	Fuel Cap
58	951-10541	Fuel Tank
59	726-0205	Hose Clamp, .490 DIA.
60	751-10349	Fuel Hose, Low Permeation, 1/4
61	751-10517A	Oil Drain
62	751-3141	Extension Hose
63	734-04263	Caster, Wheel, 8 x 1.75
	941-0706	Bearing, Flange w/ftg
64	687-02263-4021	Wheel Caster Bracket
65	712-04065	Nut, Flangelock, 3/8-16
66	738-04216A	Bolt, Shoulder, .625 x 2.515 x 3/8-16
67	712-0271	Sems Nut, 1/4-20
68	712-04064	Nut, Flangelock, 1/4-20
69	925-04022B	Hour Meter
70	925-04228	Key Switch
71	725-04439	Solenoid, 12V, 100 AMP
72	925-1707D	Battery, 155 CCA WET
73	747-04657	Battery Hold Down Strap
74	925-2054A	Key, Yellow
	925-1745A	Key
75	710-1315	Screw, 3/8-16 x 1.250
*	925-04476	Wiring Harness
*	725-04478	Starter Wire

* Not pictured

Cub Cadet Wide Cut

For a proper working machine, use Factory Approved Parts. V-belts are specially designed to engage and disengage safely. A substitute (non-OEM) V-Belt can be dangerous by not disengaging completely.

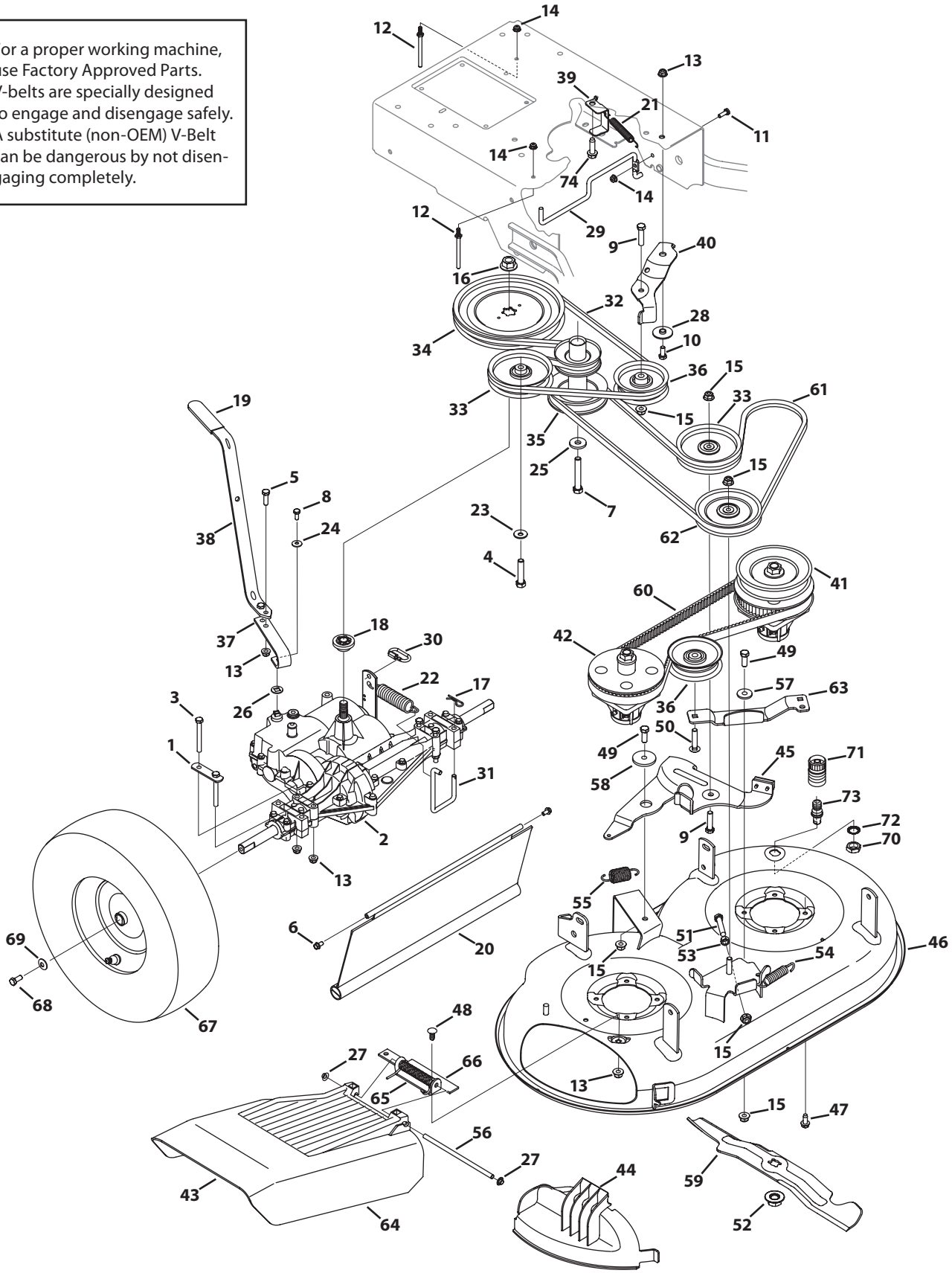

Ref.	Part Number	Description
1	17840-0637	Transaxle Mounting Bracket
2	918-04639	4 Speed Drive Assembly
3	710-0176	Hex Head Cap Screw, 5/16-18 x 2.75
4	710-0347	Hex Head Cap Screw, 3/8-16 x 1.75
5	710-0376	Hex Head Cap Screw, 5/16-18 x 1.00
6	710-04187	Screw, 1/4-15 x 0.50
7	710-04377	Hex Head Cap Screw, 7/16-20 x 2.75
8	710-0513	Hex Head Cap Screw, 1/4-28 x .625
9	710-0520	Hex Head Cap Screw, 3/8-16 x 1.50
10	710-3008	Hex Head Cap Screw, 5/16-18 x .75
11	710-3015	Hex Head Cap Screw, 1/4-20 x .75
12	911-1000	Belt Keeper, .25 DIA X 3.0
13	712-04063	Flangelock Nut, 5/16-18
14	712-04064	Flangelock Nut, 1/4-20
15	712-04065	Flangelock Nut, 3/8-16
16	712-0700	Flange Nut, 9/16-18
17	914-0145	Click Pin, .092 x 1.64 LG
18	718-04407	Spline Pulley Hub, 5/8
19	720-0142	Grip, Black
20	731-05766	Trailshield, 8.35 x 19.17
21	732-04409	Extension Spring, Wheel Drive
22	732-04443A	Extension Spring, Brake
23	736-0105	Washer, Spring, .401 x .870 x .063
24	736-0270	Washer, Bell, .265 x .75 x .062
25	736-0322	Washer, Flat, .450 x 1.250 x .164
26	736-04256	Washer, Flat, .39 x .87 x .06
27	726-04009	Push Cap
28	738-04166	Spacer, Shoulder, .5000 x .1475
29	747-04635A	Belt Keeper Rod
30	747-04673	Coupling Link, .188
31	747-04678A	Brake Spring Mounting Rod
32	954-04145A	V Belt. 4L 64.2
33	756-04129B	Idler Pulley, 4.25 DIA
34	756-04258	Flat Sheave, DIA 7.75
35	756-04260	Engine Pulley, 3.20 x 4.35 DIA
36	756-04280	Idler Pulley, 3.50 DIA
37	787-01469B-0637	Lower Shaft Lever
38	787-01470A-0637	Upper Shaft Lever

Ref.	Part Number	Description
39	787-01473-0637	Belt Keeper, .375 x 2.00
40	787-01523A-0637	Wheel Drive Idler Bracket
41	918-04438A	Drive Spindle Assembly
42	918-04439A	Spacer Spindle Assembly
43	931-04244	Chute Deflector Assembly
44	631-04252	Mulch Cover
45	987-02420	Idler Arm Assembly
46	687-02476-4021	Deck Assembly
47	710-04484	Screw, 5/16-18 x .750
48	710-0451	Bolt, Carriage, 5/16-18 x .750
49	710-0514	Hex Head Cap Screw, 3/8-16 x 1.00
50	710-0560	Screw, Carriage, 3/8-16 x 1.75
51	710-3184A	Hex Head Cap Screw, 3/8-16 x 2.00
52	712-0417A	Flange Nut, 5/8-18
53	912-3017	Hex Nut, 3/8-16
54	732-04406	Extension Spring, Timing Belt
55	732-04452	Extension Spring, Deck Brake
56	711-04027	Deflector Pin
57	938-0347	Shoulder Spacer, .625 ID x .169
58	738-04162A	Shoulder Spacer, .8840 x .190
59	942-04154A	2 in 1 Blade
60	754-04136	Timing Belt, .315 x .787
61	754-04139	Aramid V Belt, 72.2
62	756-0616	Idler Pulley, V-Type, 5.0 DIA
63	787-01440-0637	Timing Idler Bracket
64	931-04244	Chute Deflector
65	732-04012	Deflector Torsion Spring
66	787-01017A-0637	Deflector Hinge Bracket
67	634-04349-0931	Wheel, 16 x 4 x 8
68	710-0627	Hex Screw, 5/16-24 x .750
69	736-0242	Washer, Bell, .340 x .872 x .060
70	912-0641	Nut, Hex, M16-1.5
71	921-04041	Water Nozzle Adaptor
72	736-0225	Washer, Lock, 5/8
73	737-04003D	Deck Water Nozzle
74	710-1315	Screw, 3/8-16 x 1.250
*	777S30145	Danger Label

* Not pictured

Briggs & Stratton Engine Model 215707

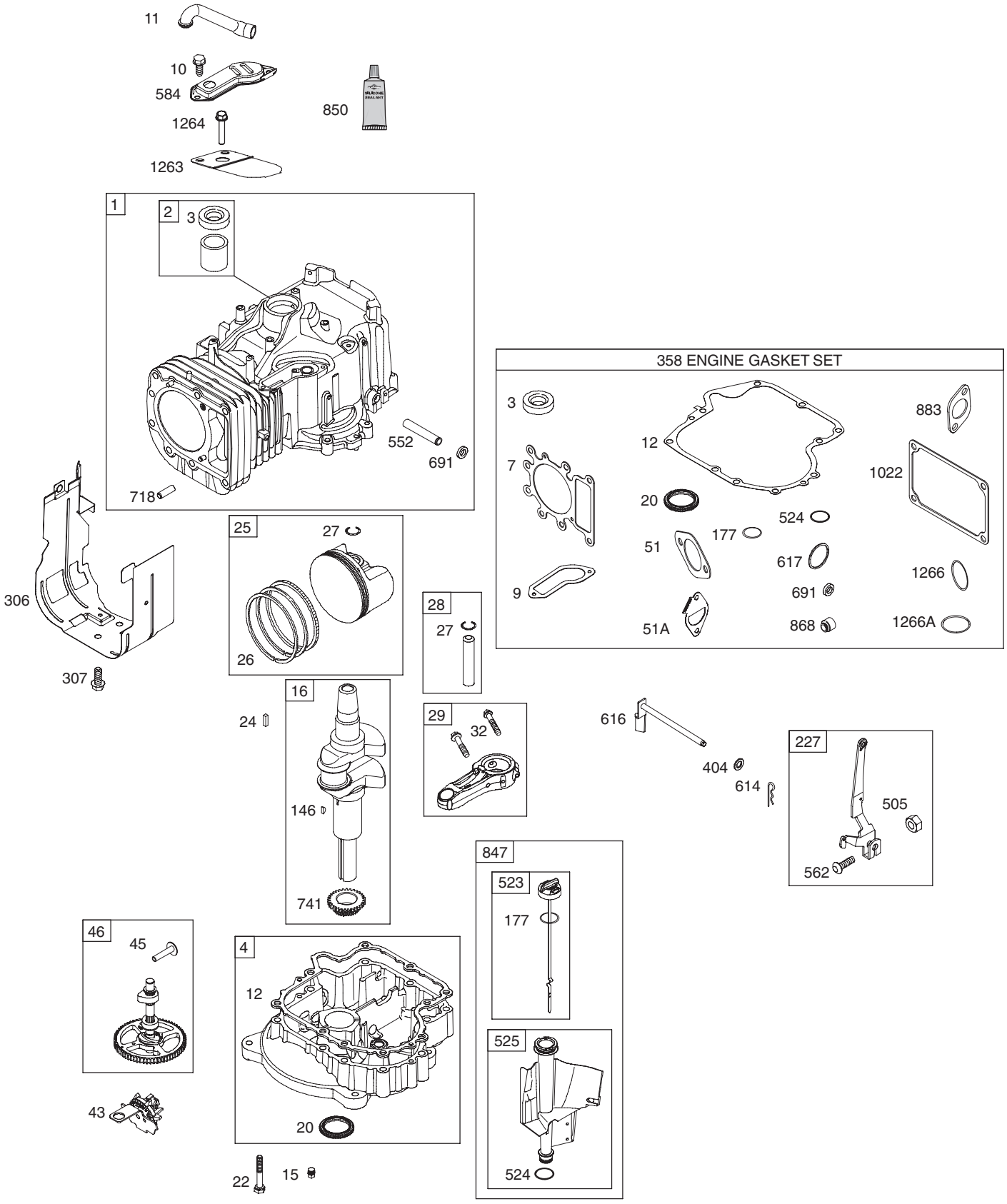

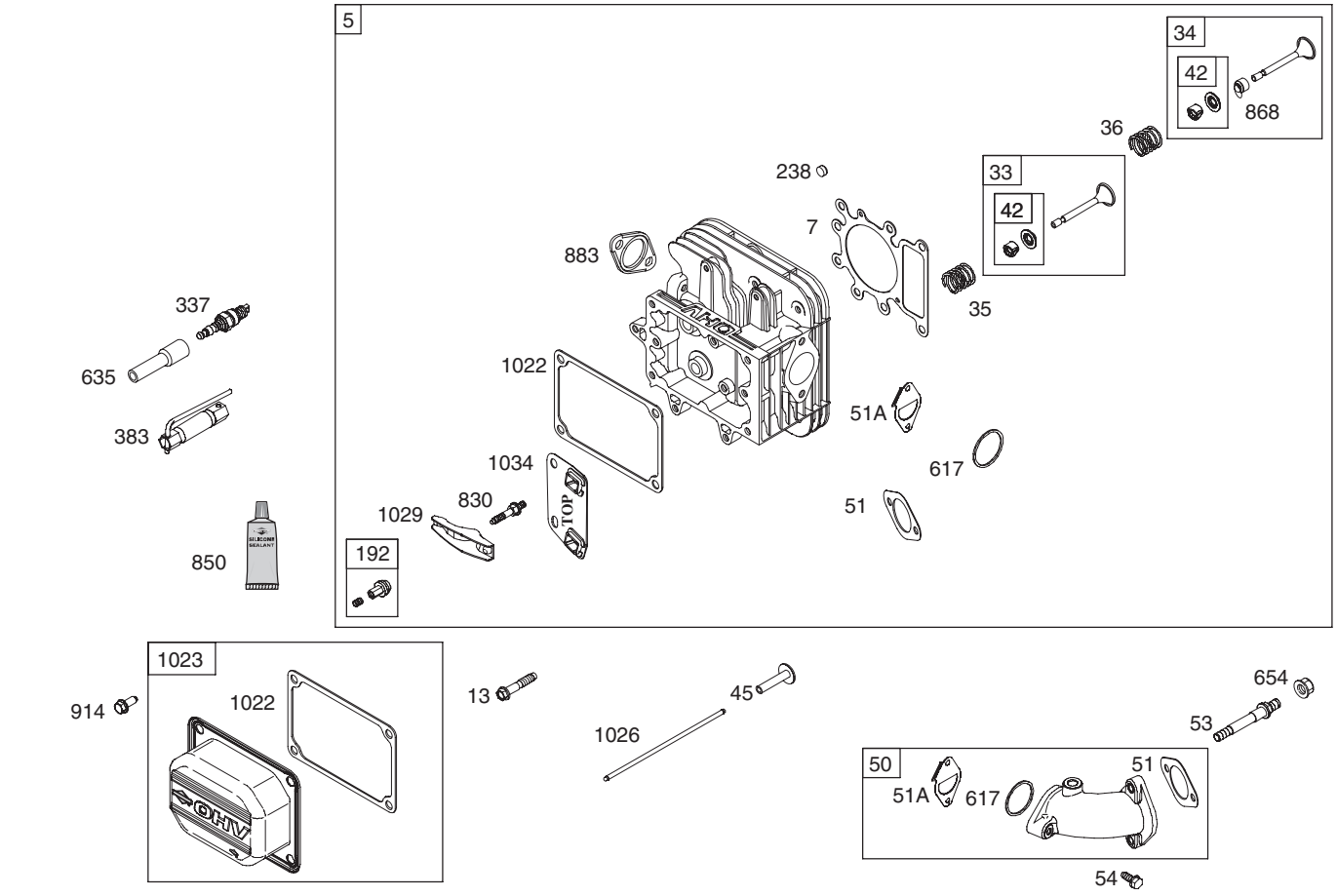

48 SHORT BLOCK
1330 REPAIR MANUAL

Briggs & Stratton Engine Model 215707

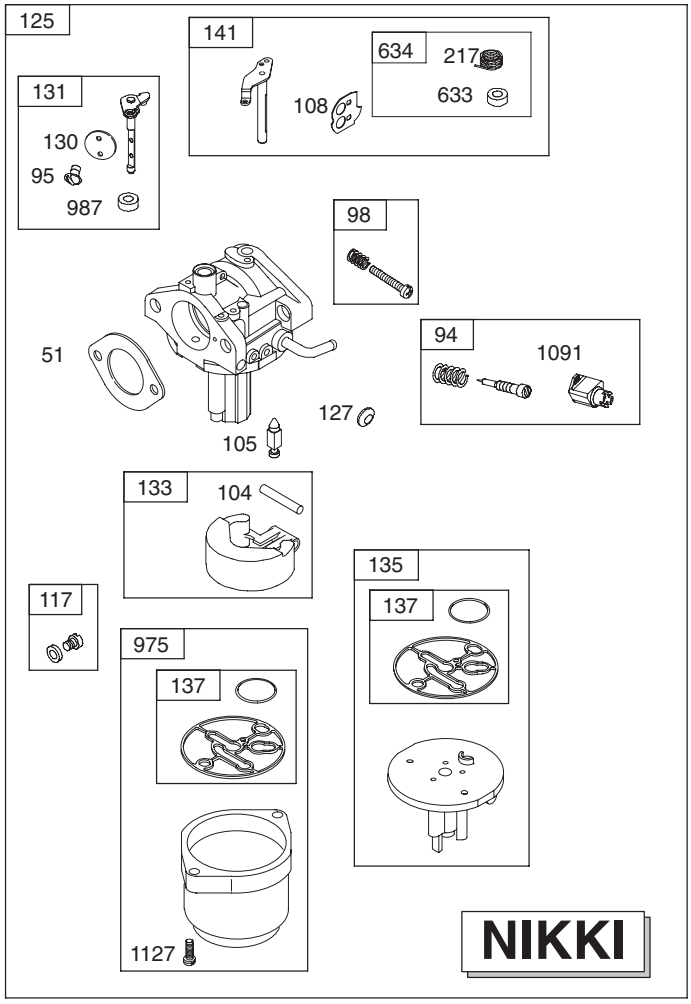

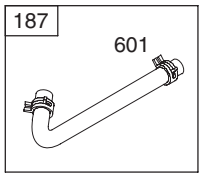



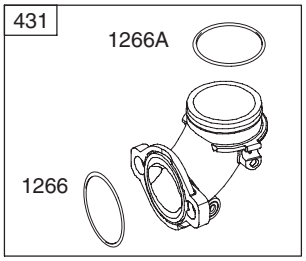

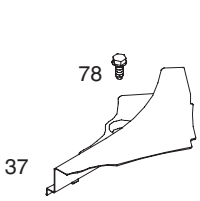

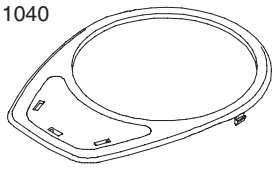

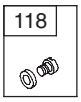

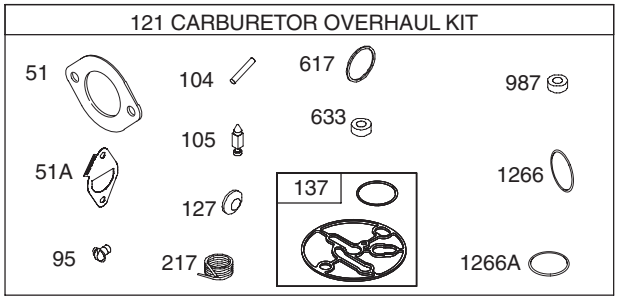

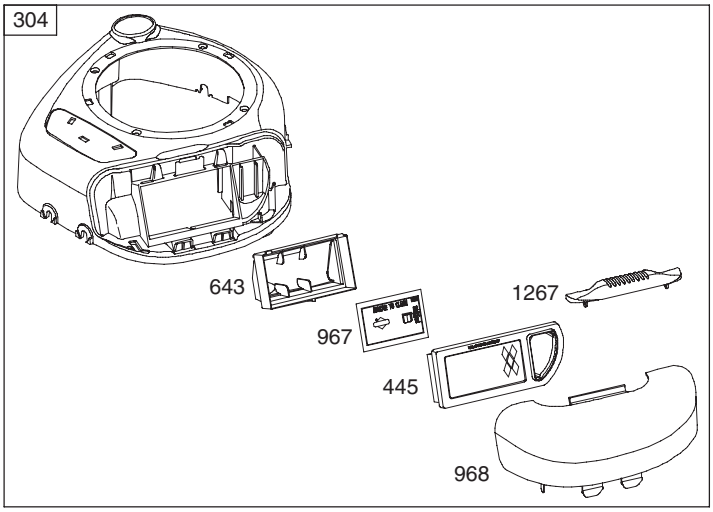

1036 EMISSIONS LABEL

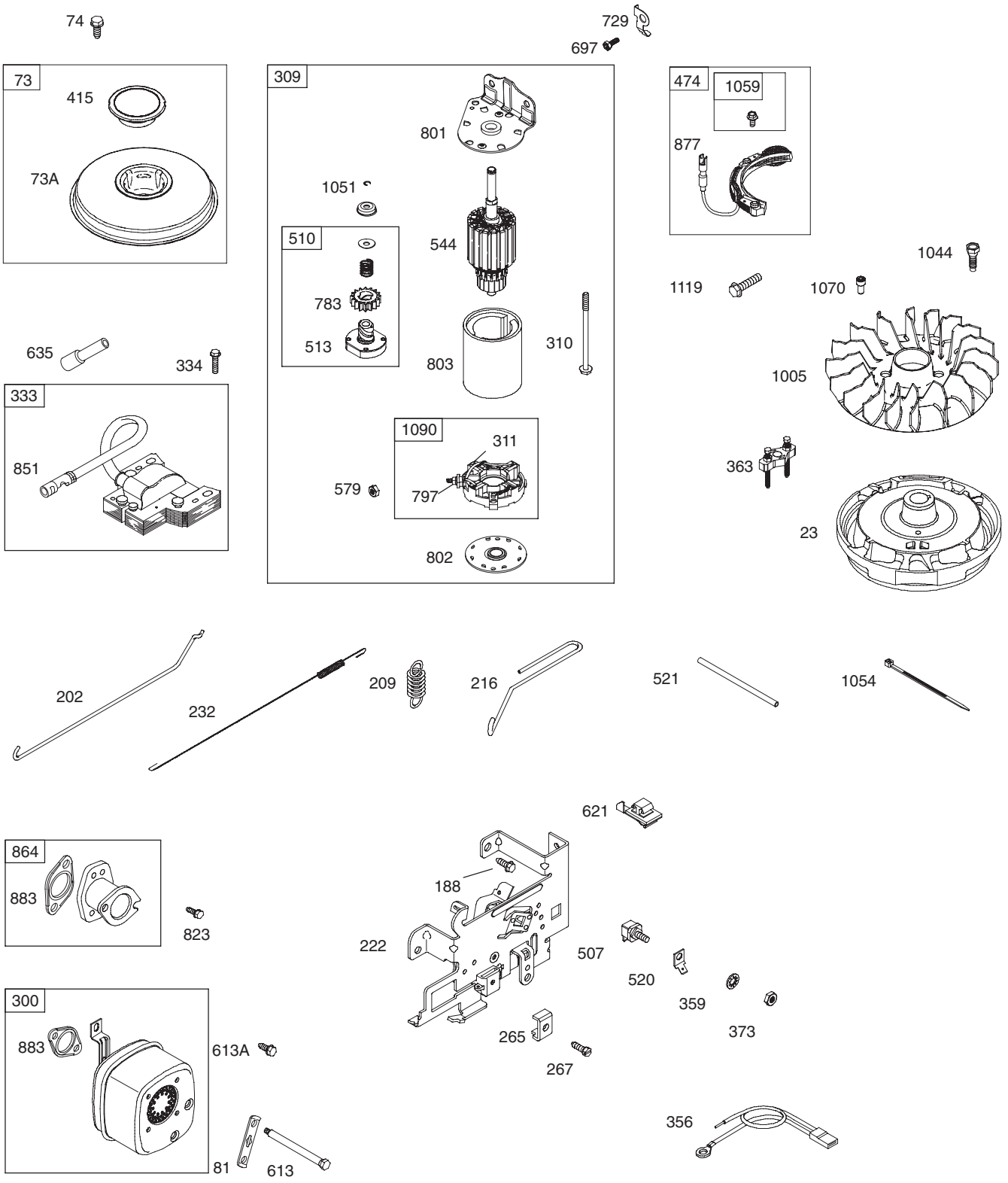
74
729
697
73
415
73A
309
801
1051
510
544
783
513
803
310
474
1059
877
1044
1119
1070
635
334
333
851
1005
363
1090
311
579
797
23
802
202
232
209
216
521
1054
621
188
222
507
520
359
373
265
267
356
864
883
823
300
883
613A
81
613

Briggs & Stratton Engine Model 215707

Ref.	Part No.		Description
1	BS-699045		Cylinder Assembly
2	BS-399265		Kit-Bushing/Seal
3	BS-391086S	*	Seal-Oil
4	BS-697106		Sump-Engine
5	BS-792964		Head-Cylinder
7	BS-273280S	* +	Gasket-Cylinder Head
9	BS-697109		Gasket-Breather
10	BS-697157		Screw (Breather Assembly)
11	BS-794683		Tube-Breather
12	BS-697110	*	Gasket-Crankcase
13	BS-690360		Screw (Cylinder Head)
15	BS-690946		Plug-Oil Drain
16	BS-698382		Crankshaft
20	BS-795387	*	Seal-Oil (PTO Side)
22	BS-692125		Screw (Crankcase Cover/Sump)
23	BS-698281		Flywheel
24	BS-222698S		Key-Flywheel
25	BS-698767		Piston Assembly (Standard)
	BS-698769		Piston Assembly (.020" Oversize)
26	BS-698375		Ring Set (Standard)
	BS-697120		Ring Set (.020" Oversize)
27	BS-698469		Lock-Piston Pin
28	BS-697099		Pin-Piston
29	BS-791633		Rod-Connecting
32	BS-791118		Screw (Connecting Rod)
33	BS-791934		Valve-Exhaust
34	BS-791935		Valve-Intake
35	BS-691279		Spring-Valve (Intake)
36	BS-691279		Spring-Valve (Exhaust)
37	BS-697352		Guard-Flywheel
42	BS-499586		Keeper-Valve
43	BS-691968		Slinger-Governor/Oil
45	BS-690564		Tappet-Valve
46	BS-793880		Camshaft
48	BS-697740		Short Block
50	BS-697361		Manifold-Intake
51	BS-692137	* + ϕ	Gasket-Intake
51A	BS-794312	* + ϕ	Gasket-Intake
53	BS-690227		Stud (Carburetor)
54	BS-691148		Screw (Intake Manifold)
73	BS-794437		Screen-Rotating
73A	BS-794137		Screen-Rotating

Ref.	Part No.		Description
74	BS-697897		Screw (Rotating Screen)
78	BS-691003		Screw (Flywheel Guard)
81	BS-691178		Lock-Muffler Screw
94	BS-793610		Kit-Idle Mixture
95	BS-690718	ϕ	Screw (Throttle Valve)
98	BS-695408		Kit-Idle Speed
104	BS-694918	ϕ	Pin-Float Hinge
105	BS-696136	ϕ	Valve-Float Needle
108	BS-698773		Valve-Choke
117	BS-794352		Jet-Main (Standard)
118	BS-791405		Jet-Main (High Altitude)
121	BS-698787		Kit-Carburetor Overhaul
125	BS-794653		Carburetor
127	BS-690727	ϕ	Plug-Welch
130	BS-698774		Valve-Throttle
131	BS-698776		Kit-Throttle Shaft
133	BS-694914		Float-Carburetor
135	BS-698780		Tube-Fuel Transfer
137	BS-698781		Gasket-Float Bowl
141	BS-698778		Kit-Choke Shaft
146	BS-691639		Key-Timing
177	BS-691031	*	Seal-O Ring (Dipstick)
187	BS-791805		Line-Fuel (Formed)
188	BS-691693		Screw (Control Bracket)
192	BS-691986		Adjuster-Rocker Arm
202	BS-691841		Link-Mechanical Governor
209	BS-792813		Spring-Governor (Brown)
216	BS-691840		Link-Governor
217	BS-695409		Spring-Choke Return
222	BS-694042		Bracket-Control
227	BS-691374		Lever-Governor Control
232	BS-691842		Spring-Governor Link
238	BS-691843		Cap-Valve
240	BS-394358S		Filter-Fuel
265	BS-691024		Clamp-Casing
267	BS-794904		Screw (Casing Clamp)
300	BS-794660		Muffler
304	BS-698473		Housing-Blower
305	BS-697102		Screw (Blower Housing) (Long)
305A	BS-793376		Screw (Blower Housing) (Short)
306	BS-697359		Shield-Cylinder
307	BS-691003		Screw (Cylinder Shield)

Ref.	Part No.		Description
309	BS-693551		Motor-Starter
310	BS-690323		Bolt (Starter Motor)
311	BS-497608		Brush Set
333	BS-795315		Armature-Magneto
334	BS-691061		Screw (Magneto Armature)
337	BS-491055S		Plug-Spark
356	BS-398808		Wire-Stop
358	BS-697151		Gasket Set-Engine
359	BS-691077		Washer (Ground Terminal)
363	BS-19203		Puller-Flywheel
373	BS-691612		Nut (Ground Terminal)
383	BS-89838S		Wrench-Spark Plug
404	BS-691691		Washer (Governor Crank)
415	BS-794129		Plug (Rotating Screen)
431	BS-697122		Elbow-Intake
445	BS-698413		Filter-Air Cleaner Cartridge
474	BS-696578		Alternator
505	BS-691251		Nut (Governor Control Lever)
507	BS-691972		Insulator
510	BS-693699		Drive-Starter
513	BS-692024		Clutch-Drive
520	BS-691084		Terminal-Ground
521	BS-690581		Shield-Cable
523	BS-699908		Dipstick
524	BS-691032	*	Seal-Dipstick Tube
525	BS-697184		Tube-Dipstick
544	BS-692034		Armature-Starter
552	BS-697144		Bushing-Governor Crank
562	BS-691119		Bolt (Governor Control Lever)
579	BS-691029		Nut (Starter Cable)
584	BS-794682		Cover-Breather Passage
601	BS-791850		Hose-Clamp
613	BS-691416		Screw (Muffler) (Long)
613A	BS-691678		Screw (Muffler) (Short)
614	BS-93306		Pin-Cotter (Governor Crank)
616	BS-692012		Crank-Governor
617	BS-692138	* ϕ	Seal-O Ring (Intake Manifold)
621	BS-692310		Switch-Stop
633	BS-699813		Seal-Choke/Throttle Shaft
634	BS-698779	ϕ	Spring/Seal Assembly
635	BS-691909		Boot-Spark Plug
643	BS-697155		Retainer-Air Filter

Ref.	Part No.		Description
654	BS-690958		Nut (Carburetor)
691	BS-692407	*	Seal-Governor Shaft
697	BS-690372		Screw (Drive Cap)
718	BS-690959		Pin-Locating
729	BS-691224		Clip-Wire
741	BS-697128		Gear-Timing
783	BS-693713		Gear-Pinion
797	BS-693167		Nut (Brush Retainer)
801	BS-691283		Cap-Drive
802	BS-691286		Cap-End
803	Housing-Starter (Not Serviced Separately, Order Starter Motor 693551, Reference 309)		
823	BS-698941		Screw (Muffler Adapter)
830	BS-691095		Stud-Rocker Arm
847	BS-790443		Dipstick/Tube Assembly
850	BS-100100		Sealant-Liquid (Rocker Cover Gasket and Breather Gasket)
851	BS-692424		Terminal-Spark Plug
864	BS-794661		Adapter-Muffler
868	BS-690968	* +	Seal-Valve
877	BS-393814		Wire/Connector-Alternator
883	BS-692236	* +	Gasket-Exhaust
914	BS-691108		Screw (Rocker Cover)
967	BS-697292		Filter-Pre Cleaner
968	BS-697420		Cover-Air Cleaner
975	BS-698783		Bowl-Float
987	BS-698777	ϕ	Seal-Throttle Shaft
1005	BS-794439		Fan-Flywheel
1022	BS-272475S		Gasket-Rocker Cover
1023	BS-794659		Cover-Rocker
1026	BS-794573		Rod-Push (Exhaust)
	BS-697394		Rod-Push (Intake)
1029	BS-691751		Arm-Rocker
1034	BS-690822		Guide-Push Rod
1036	Label-Emissions (Available from a Briggs & Stratton Authorized Dealer)		
1040	BS-697381		Plate-Trim
1044	BS-698139		Screw (Flywheel)
1051	BS-691265		Ring-Retaining
1054	BS-280275		Tie-Cable
1059	BS-698516		Kit-Screw/Washer (Alternator)
1070	BS-690363		Screw (Flywheel Fan)
1090	BS-691293		Retainer-Brush

Briggs & Stratton Engine Model 215707

Ref.	Part No.		Description
1091	BS-691333		Cap-Limiter
1095	BS-795807		Gasket Set-Valve
1119	BS-93621		Screw (Alternator)
1127	BS-695407		Screw (Float Bowl)
1263	BS-697124		Reed-Breather
1264	BS-697104		Screw (Breather Reed)
1266	BS-691917	* ϕ	Seal-O Ring (Intake Elbow) (Red)
1266A	BS-697123	* ϕ	Seal-O Ring (Intake Elbow) (Large)
1267	BS-697419		Latch-Blower Housing
1329	BS-2157070 604G1		Replacement Engine

* Included in Engine Gasket Set, Key. No. 358
ϕ Included in Carburetor Overhaul Kit, Key. No. 121
+ Included in Valve Gasket Set, Key. No. 1095

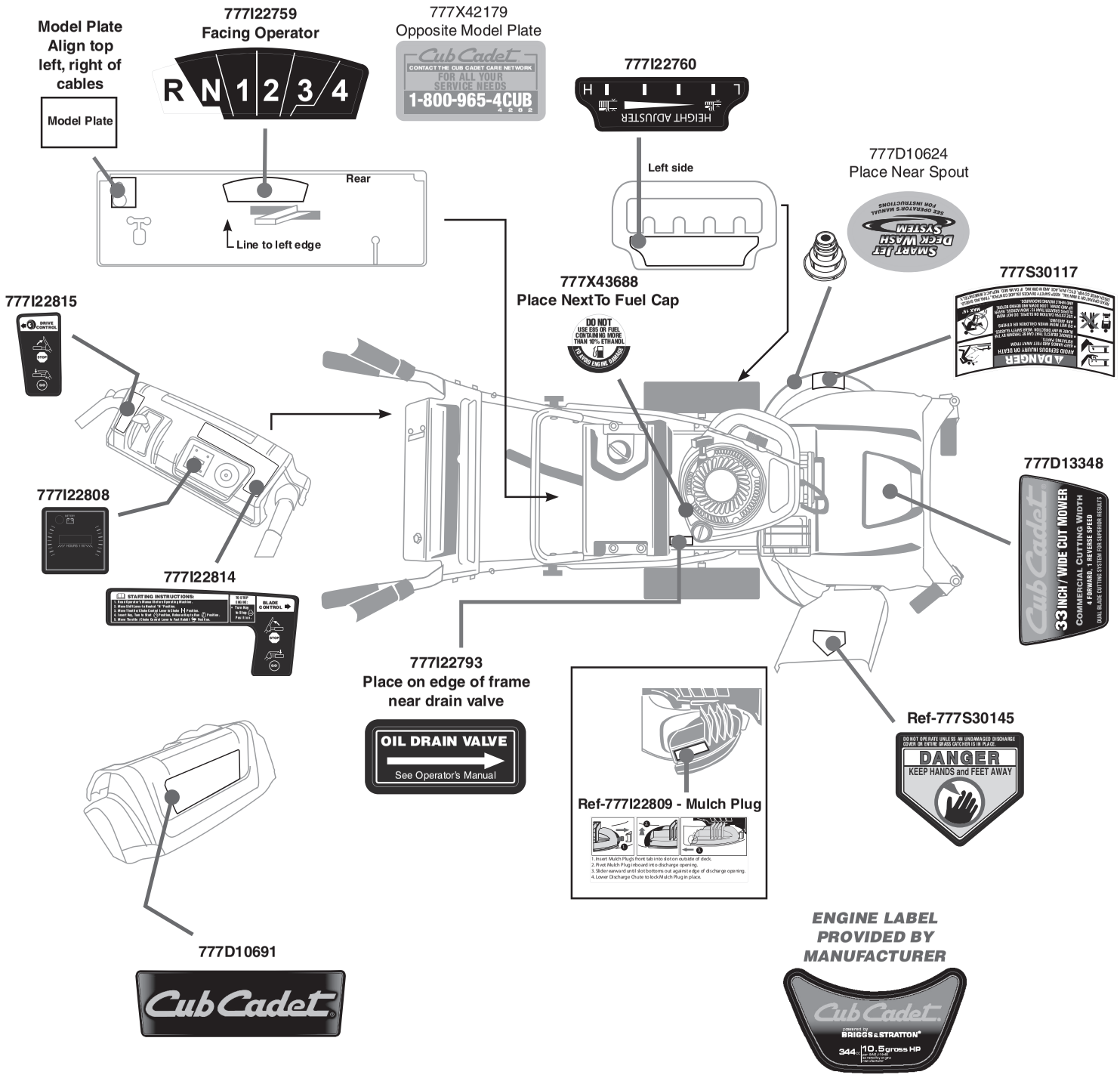
Model Plate
Align top left, right of cables
Model Plate
777I22759
Facing Operator
R N 1 2 3 4
777X42179
Opposite Model Plate
Cub Cadet
CONTACT THE CUB CADET CARE NETWORK FOR ALL YOUR SERVICE NEEDS
1-800-965-4CUB
777I22760
H L
HEIGHT ADJUSTER
Rear
Line to left edge
Left side
777D10624
Place Near Spout
SMART JET DECK WASH SYSTEM
SEE OPERATOR'S MANUAL FOR INSTRUCTIONS
777S30117
777I22815
DRIVE CONTROL
STOP
777X43688
Place NextTo Fuel Cap
DO NOT USE E85 OR FUEL CONTAINING MORE THAN 10% ETHANOL
777I22808
777I22814
STARTING INSTRUCTIONS:
BLADE CONTROL
STOP
777D13348
Cub Cadet
33 INCH / WIDE CUT MOWER
COMMERCIAL CUTTING WIDTH
4 FORWARD, 1 REVERSE SPEED
DUAL BLADE CUTTING SYSTEM FOR SUPERIOR RESULTS
777I22793
Place on edge of frame near drain valve
OIL DRAIN VALVE
See Operator's Manual
Ref-777I22809 - Mulch Plug
1. Insert Mulch Plug's front tab into slot on outside of deck.
2. Pivot Mulch Plug inboard into discharge opening.
3. Slide rearward until slot bottoms out against edge of discharge opening.
4. Lower Discharge Chute to lock Mulch Plug in place.
Ref-777S30145
DO NOT OPERATE UNLESS AN UNDAMAGED DISCHARGE COVER OR ENTIRE GRASS CATCHER IS IN PLACE.
DANGER
KEEP HANDS and FEET AWAY
777D10691
Cub Cadet
ENGINE LABEL PROVIDED BY MANUFACTURER
Cub Cadet
POWERED BY
BRIGGS & STRATTON
344cc 10.5gross HP

Tecumseh Transmission Model EP-17488

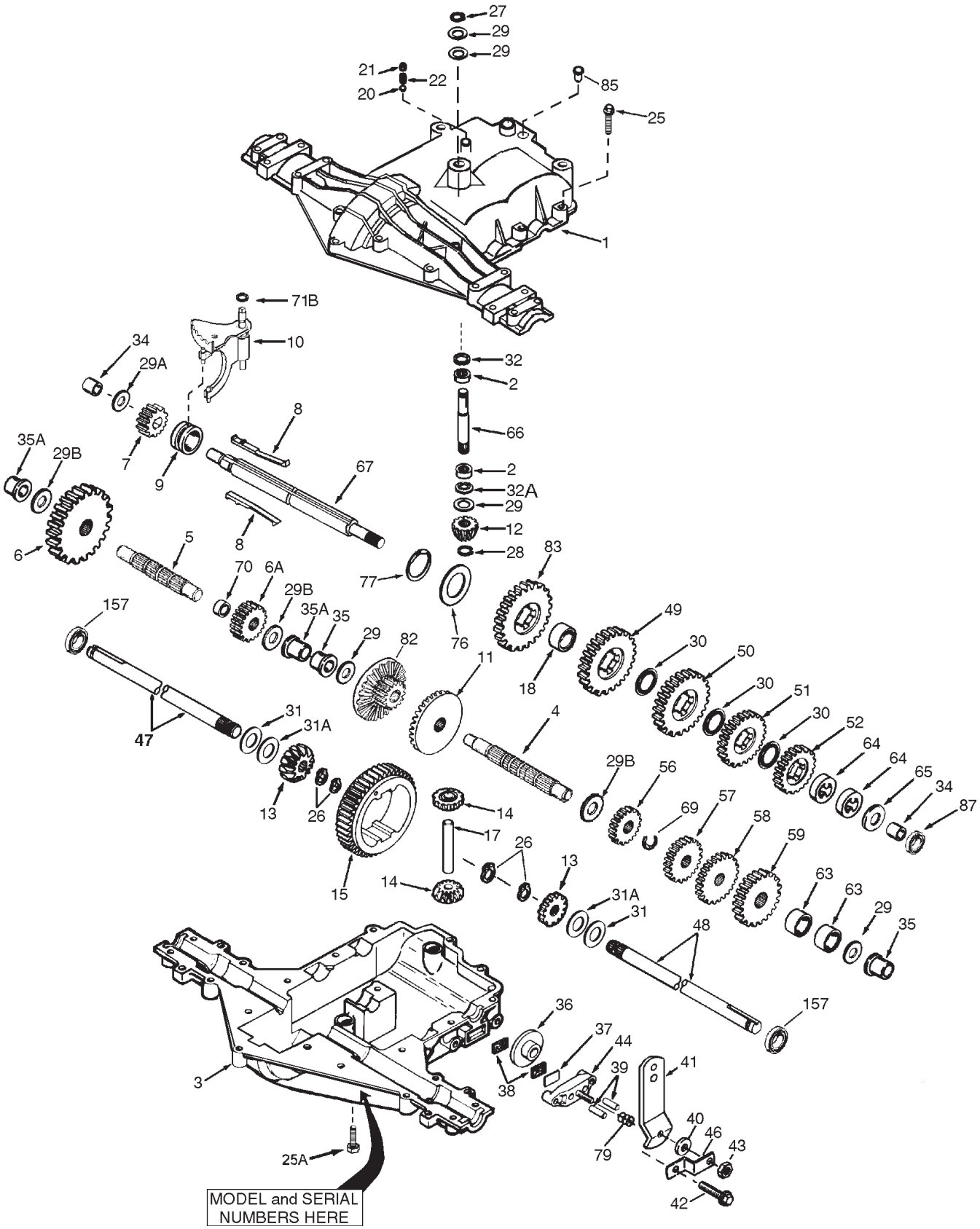

Ref. No.	Part No.	Description
1	TC-772147	Transaxle Cover
2	TC-780086A	Needle Bearing (1/2" long)
3	TC-770128A	Transaxle Case
4	TC-776395	Countershaft
5	TC-776409	Output Shaft
6	TC-778364	Spur Gear (38T-PM/SER)
6A	TC-778369	Spur Gear (15T-PM/SER)
7	TC-778330	Spur Gear (11T-PM/SER)
8	TC-792180A	Shift Key Set (Qty. 2)
9	TC-784352	Shift Collar
10	TC-784378	Shift Rod & Fork Assembly
11	TC-778334	Bevel Gear (30T-PM)
12	TC-778309	Input Bevel Pinion (13T-PM)
13	TC-778368	Bevel Gear 13T (Incl. ref. 13 & 14)
14	TC-778368	Bevel Gear 13T (Incl. ref. 13 & 14)
15	TC-778370	Ring Gear (43T)
17	TC-786188	Drive Pin
18	TC-786102	Spacer (1.130" x .695")
20	TC-792077A	Ball (Stainless Steel 5/16" dia.)
21	TC-792211	Screw, 3/8-16 x 3/8"
22	TC-792079	Spring
25	TC-792073A	Screw, 1/4-20 x 1-1/4"
25A	TC-792177	Screw, 1/4-20 x 1-3/8"
26	TC-792125	Retaining Ring-package of 2
27	TC-792035	Retaining Ring
28	TC-788040	Retaining Ring
29	TC-780072	Washer .627" ID .031"
29A	TC-780160	Thrust Washer (.563" ID x .031")
29B	TC-780051	Thrust Washer (.762" ID X .031")
30	TC-780108	Shift Washer (Cupped)
31	TC-780001	Washer .750" ID .56"
31A	TC-780195	Washer .750" ID .062
32	TC-788083	Oil Seal 5/8"
32A	TC-792001	O Ring (.823" OD)
34	TC-780194	Bushing (.563")
35	TC-780193	Flanged Bushing (.625" ID)
35A	TC-780197	Flanged Bushing (.751" ID)

Ref. No.	Part No.	Description
36	TC-790075	Brake Disk
37	TC-790007	Brake Pad Plate
38	TC-799021A	Brake Pad (pkg. of 2)
39	TC-786026	Dowel Pin .3125" x .750"
40	TC-792076A	Washer .312" ID .059"
41	TC-790104	Brake Lever
42	TC-792177	Screw 1/4-20 x 1-3/8"
43	TC-792075	Lock Nut 5/16-24
44	TC-790025	Brake Pad Holder
46	TC-786086	Bracket
47	TC-775146	Axle (10.719" long) (Incl. 26)
48	TC-775147	Axle (15.312" long) (Incl. 26)
49	TC-778338	Spur Gear (27T-PM/IC)
50	TC-778342	Spur Gear (22T-PM/IC)
51	TC-778313	Spur Gear (19T-PM/IC)
52	TC-778350	Spur Gear (16T-PM/IC)
56	TC-778337	Spur Gear (13T-PM/SER)
57	TC-778341	Spur Gear (18T-PM/SER)
58	TC-778351	Spur Gear (21T-PM/SER)
59	TC-778349	Spur Gear (24T-PM/SER)
63	TC-786071	Countershaft Spacer 1-1/8" x 3/8''
64	TC-786072	Brake Shaft Spacer 1-3/8" x 3/8''
65	TC-780189	Washer .563" ID .062
66	TC-776472	Input Shaft
67	TC-776396	Brake Shaft
69	TC-792170	Retaining Ring (.75" x .042")
70	TC-786187	Spacer (.890")
71B	TC-788092	O-Ring
76	TC-780090	Flat Washer (1.128" ID x .058")
77	TC-788078A	Retaining Ring (1.125" x .050")
79	TC-792144	Spring
82	TC-778333	Bevel (30T) & Spur Gear
83	TC-778338	Spur Gear (27T-PM/IC)
85	TC-792154	Oil Fill Plug
87	TC-788089A	Oil Seal 9/16" ID
157	TC-788088A	Oil Seal 3/4" ID



To order replacement parts, call a Customer Support Representative at (800) 965-4CUB.
Locate your nearest Cub Cadet dealer at (877) 282-8684
or visit www.cubcadet.com to find the nearest Cub Cadet dealer in your area.

CUB CADET LLC, P.O. BOX 361131 CLEVELAND, OHIO 44136-0019