CRAFTSMAN®

INSTRUCTION MANUAL | MANUAL DE INSTRUCTIONES

10" Sliding Compound Miter Saw
Sierra Ingleteadora Compuesta Deslizante de 254 mm (10 pulgados)

CMXEMAX69434501



IF YOU HAVE QUESTIONS OR COMMENTS, CONTACT US.
SI TIENE DUDAS O COMENTARIOS, CONTÁCTENOS.

1-888-331-4569 **WWW.CRAFTSMAN.COM**

Definitions: Safety Alert Symbols and Words

This instruction manual uses the following safety alert symbols and words to alert you to hazardous situations and your risk of personal injury or property damage.

DANGER: *Indicates an imminently hazardous situation which, if not avoided,* ***will*** *result in* ***death or serious injury.***

WARNING: *Indicates a potentially hazardous situation which, if not avoided,* ***could*** *result in* ***death or serious injury.***

CAUTION: *Indicates a potentially hazardous situation which, if not avoided,* ***may*** *result in* ***minor or moderate injury.***

(Used without word) Indicates a safety related message.

NOTICE: *Indicates a practice* ***not related to personal injury*** *which, if not avoided,* ***may*** *result in* ***property damage.***

Fig. 1

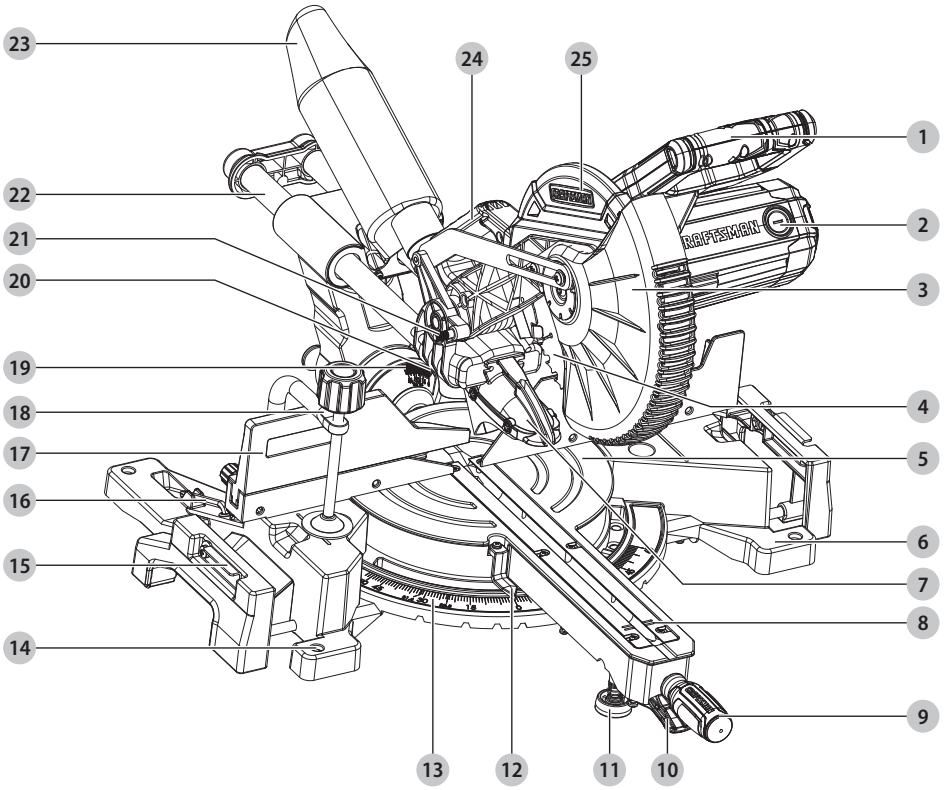

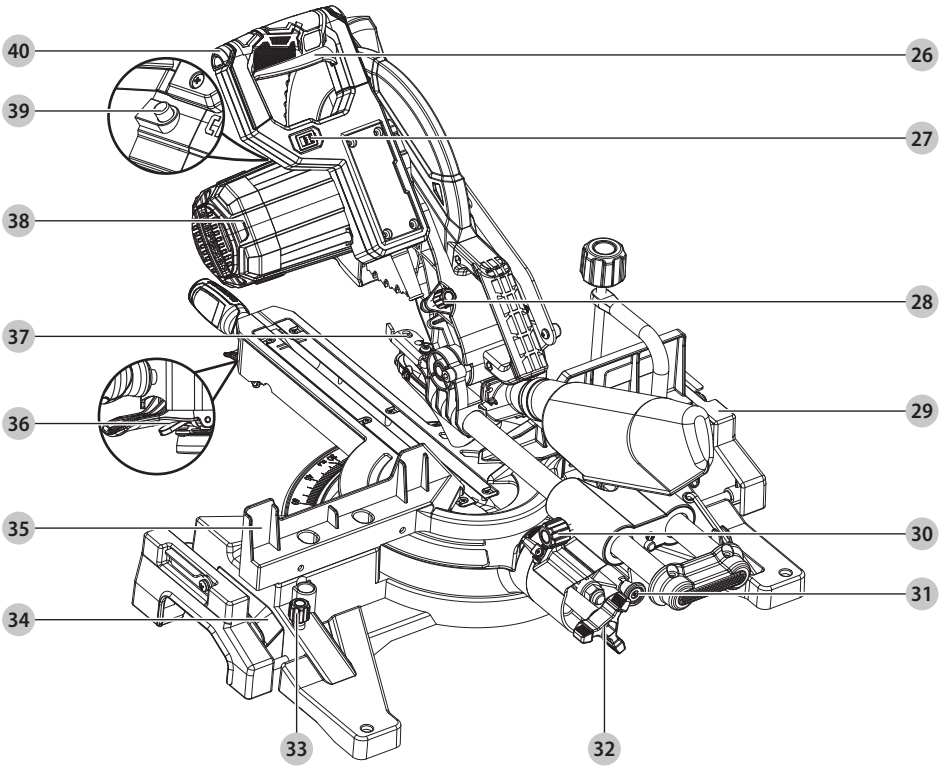

Components

1. Switch handle
2. Carbon brush cap
3. Lower blade guard
4. Saw blade
5. Miter table
6. Base
7. Dust duct inlet
8. Table insert
9. Miter lock handle
10. Miter latch lever
11. Leveling foot
12. Miter scale pointer
13. Miter scale
14. Mounting hole
15. Cut stop
16. Wrench
17. Sliding fence
18. Workpiece clamp
19. Bevel scale
20. Bevel scale pointer
21. Head lock pin
22. Slide bar
23. Dust bag
24. Carrying handle
25. Upper blade guard
26. Trigger switch
27. Precision blade guide systems ON/OFF switch
28. Depth adjustment knob
29. Extension table
30. Slide lock knob
31. Lock button
32. Bevel lock knob
33. Extension rail lock knob
34. Hand hold
35. Fence
36. Detent override
37. Depth stop
38. Motor
39. Arbor lock
40. Safety lock button

WARNING: Read all safety warnings and all instructions. *Failure to follow the warnings and instructions may result in electric shock, fire and/or serious injury.*

WARNING: *Never modify the product or any part of it. Damage or personal injury could result.*

WARNING: *To reduce the risk of injury, read the instruction manual.*

If you have any questions or comments about this or any product, call CRAFTSMAN toll free at: 1-888-331-4569.

10" Sliding Compound Miter Saw
CMXEMAX69434501

SAVE THESE INSTRUCTIONS AND MAKE THEM AVAILABLE TO OTHER USERS AND OWNERS OF THIS TOOL!

IMPORTANT SAFETY INFORMATION

Read and understand all of the safety precautions, warnings and operating instructions in the Instruction Manual before operating or maintaining this power tool.
Most accidents that result from power tool operation and maintenance are caused by the failure to observe basic safety rules or precautions. An accident can often be avoided by recognizing a potentially hazardous situation before it occurs, and by observing appropriate safety procedures.
Basic safety precautions are outlined in the "SAFETY" section of this Instruction Manual and in the sections which contain the operation and maintenance instructions.
Hazards that must be avoided to prevent bodily injury or machine damage are identified by WARNINGS on the power tool and in this Instruction Manual.
NEVER use this power tool in a manner that has not been specifically recommended by CRAFTSMAN.

SAFETY SYMBOLS

The label on your tool may include the following symbols. The symbols and their definitions are as follows:

V ..... volts
Hz ..... hertz
min ..... minutes
⎓ or DC ..... direct current.
Ⓘ ..... Class I Construction (grounded)
. . ./min ..... per minute
BPM ..... beats per minute
IPM ..... impacts per minute
RPM ..... revolutions per minute
sfpm ..... surface feet per minute
SPM ..... strokes per minute
A ..... amperes
W ..... watts
~ or AC ..... alternating current
..... Danger! keep hands away from blade.
..... Unlock / to loosen.
⎓ or AC/DC ..... alternating or direct current
..... Class II Construction (double insulated)
n_0 ..... no load speed
n ..... rated speed
..... earthing terminal.
..... safety alert symbol.
..... visible radiation.
..... wear respiratory protection.
..... wear eye protection.
..... wear hearing protection.
..... read all documentation
..... Lock / to tighten or secure.

WARNING: *The operation of any power tool can result in foreign objects being thrown into your eyes, which can result in severe eye damage. Before beginning power tool operation, always wear safety goggles or safety glasses with side shields and a full-face shield when needed. We recommend a Wide Vision Safety Mask for use over eyeglasses or standard safety glasses with side shields. Always use eye protection which is marked to comply with ANSI Z87.1. Everyday eyeglasses have only impact resistant lenses. They are NOT safety glasses.*

WARNING: *To ensure safety and reliability, all repairs should be performed by a qualified service technician.*

SAFETY INSTRUCTIONS

WARNING: Read all safety warnings, instructions, illustrations and specifications provided with this power tool. *Failure to follow all instructions listed below may result in electric shock, fire and/or serious injury.*

Save all warnings and instructions for future reference.
The term "power tool" in the warnings refers to your mains-operated (corded) power tool or battery operated (cordless) power tool.

1) Work area safety

a) Keep work area clean and well lit. Cluttered or dark areas invite accidents.
b) Do not operate power tools in explosive atmospheres, such as in the presence of flammable liquids, gases or dust. Power tools create sparks which may ignite the dust or fumes.
c) Keep children and bystanders away while operating a power tool. Distractions can cause you to lose control.

2) Electrical safety

a) Power tool plugs must match the outlet. Never modify the plug in any way. Do not use any adapter plugs with earthed (grounded) power tools. Unmodified plugs and matching outlets will reduce risk of electric shock.
b) Avoid body contact with earthed or grounded surfaces, such as pipes, radiators, ranges and refrigerators. There is an increased risk of electric shock if your body is earthed or grounded.
c) Do not expose power tools to rain or wet conditions. Water entering a power tool will increase the risk of electric shock.
d) Do not abuse the cord. Never use the cord for carrying, pulling or unplugging the power tool. Keep cord away from heat, oil, sharp edges or moving parts. Damaged or entangled cords increase the risk or electric shock.
e) When operating a power tool outdoors, use an extension cord suitable for outdoor use. Use of a cord suitable for outdoor use reduce the risk of electric shock.
f) If operating a power tool in a damp location is unavoidable, use a ground fault circuit interrupter (GFCI)

protected supply. Use of an GFCI reduces the risk of electric shock.

3) Personal safety

a) Stay alert, watch what you are doing and use common sense when operating a power tool. Do not use a power tool while you are tired or under the influence of drugs, alcohol or medication. A moment of inattention while operating power tools may result in serious personal injury.

b) Use personal protective equipment. Always wear eye protection. Protective equipment such as dust mask, non-skid safety shoes, hard hat, or hearing protection used for appropriate conditions will reduce personal injuries.

c) Prevent unintentional starting. Ensure the switch is in the off-position before connecting to power source and/or battery pack, picking up or carrying the tool. Carrying power tools with your finger on the switch or energizing power tools that have the switch on invites accidents.

d) Remove any adjusting key or wrench before turning the power tool on. A wrench or a key left attached to a rotating part of the power tool may result in personal injury.

e) Do not overreach. Keep proper footing and balance at all times. This enables better control of the power tool in unexpected situations.

f) Dress properly. Do not wear loose clothing or jewelry. Keep your hair, clothing and gloves away from moving parts. Loose clothes, jewelry or long hair can be caught in moving parts.

g) If devices are provided for the connection of dust extraction and collection facilities, ensure these are connected and properly used. Use of dust collection can reduce dust-related hazards.

h) Do not let familiarity gained from frequent use of tools allow you to become complacent and ignore tool safety principles. A careless action can cause severe injury within a fraction of a second.

4) Power tool use and care

a) Do not force the power tool. Use the correct power tool for your application. The correct power tool will do the job better and safer at the rate for which it was designed.

b) Do not use the power tool if the switch does not turn it on and off. Any power tool that cannot be controlled with the switch is dangerous and must be repaired.

c) Disconnect the plug from the power source and/or remove the battery pack, if detachable, from the power tool before making any adjustments, changing accessories, or storing power tools. Such preventive safety measures reduce the risk of starting the power tool accidentally.

d) Store idle power tools out of the reach of children and do not allow persons unfamiliar with the power tool or these instructions to operate the power tool. Power tools are dangerous in the hands of untrained users.

e) Maintain power tools and accessories. Check for misalignment or binding of moving parts, breakage of parts and any other condition that may affect the power tool's operation. If damaged, have the power tool repaired before use. Many accidents are caused by poorly maintained power tools.

f) Keep cutting tools sharp and clean. Properly maintained cutting tools with sharp cutting edges are less likely to bind and are easier to control.

g) Use the power tool, accessories and tool bits, etc., in accordance with these instructions, taking into account the working conditions and the work to be performed. Use of the power tool for operations different from those intended could result in a hazardous situation.

h) Keep handles and grasping surfaces dry, clean and free from oil and grease. Slippery handles and grasping surfaces do not allow for safe handling and control of the tool in unexpected situations.

5) Service

a) Have your power tool serviced by a qualified repair person using only identical replacement parts. This will ensure that the safety of the power tool is maintained.

Safety instructions for miter saw

- ***Miter saws are intended to cut wood or wood-like products, they cannot be used with abrasive cut-off wheels for cutting ferrous material such as bars, rods, studs, etc.*** *Abrasive dust causes moving parts such as the lower guard to jam. Sparks from abrasive cutting will burn the lower guard, the kerf insert and other plastic parts.*
- ***Use clamps to support the workpiece whenever possible. If supporting the workpiece by hand, you must always keep your hand at least 100 mm from either side of the saw blade. Do not use this saw to cut pieces that are too small to be securely clamped or held by hand.*** *If your hand is placed too close to the saw blade, there is an increased risk of injury from blade contact.*
- ***Push the saw through the workpiece. Do not pull the saw through the workpiece. To make a cut, raise the saw head and pull it out over the workpiece without cutting, start the motor, press the saw head down and push the saw through the workpiece****. Cutting on the pull stroke is likely to cause the saw blade to climb on top of the workpiece and violently throw the blade assembly towards the operator.*
- ***Never cross your hand over the intended line of cutting either in front or behind the saw blade.*** *Supporting the workpiece "cross handed" i.e. holding the workpiece to the right of the saw blade with your left hand or vice versa is very dangerous.*
- ***Do not reach behind the fence with either hand closer than 100 mm from either side of the saw blade, to remove wood scraps, or for any other reason while the blade is spinning.*** *The proximity of the spinning saw blade to your hand may not be obvious and you may be seriously injured.*
- ***Inspect your workpiece before cutting. If the workpiece is bowed or warped, clamp it with the outside bowed face toward the fence. Always make certain that there is no gap between the workpiece,***

fence and table along the line of the cut. *Bent or warped workpieces can twist or shift and may cause binding on the spinning saw blade while cutting. There should be no nails or foreign objects in the workpiece.*

- ***Do not use the saw until the table is clear of all tools, wood scraps, etc., except for the workpiece.*** *Small debris or loose pieces of wood or other objects that contact the revolving blade can be thrown with high speed.*
- ***Cut only one workpiece at a time.*** *Stacked multiple workpieces cannot be adequately clamped or braced and may bind on the blade or shift during cutting.*
- ***Ensure the miter saw is mounted or placed on a level, firm work surface before use.*** *A level and firm work surface reduces the risk of the miter saw becoming unstable.*
- ***Plan your work. Every time you change the bevel or miter angle setting, make sure the adjustable fence is set correctly to support the workpiece and will not interfere with the blade or the guarding system.*** *Without turning the tool "ON" and with no workpiece on the table, move the saw blade through a complete simulated cut to assure there will be no interference or danger of cutting the fence.*
- ***Provide adequate support such as table extensions, saw horses, etc. for a workpiece that is wider or longer than the table top.*** *Workpieces longer or wider than the miter saw table can tip if not securely supported. If the cut-off piece or workpiece tips, it can lift the lower guard or be thrown by the spinning blade.*
- ***Do not use another person as a substitute for a table extension or as additional support.*** *Unstable support for the workpiece can cause the blade to bind or the workpiece to shift during the cutting operation pulling you and the helper into the spinning blade.*
- ***The cut-off piece must not be jammed or pressed by any means against the spinning saw blade.*** *If confined, i.e. using length stops, the cut-off piece could get wedged against the blade and thrown violently.*
- ***Always use a clamp or a fixture designed to properly support round material such as rods or tubing.*** *Rods have a tendency to roll while being cut, causing the blade to "bite" and pull the work with your hand into the blade.*
- ***Let the blade reach full speed before contacting the workpiece.*** *This will reduce the risk of the workpiece being thrown.*
- ***If the workpiece or blade becomes jammed, turn the miter saw off. Wait for all moving parts to stop and disconnect the plug from the power source and/or remove the battery pack. Then work to free the jammed material.*** *Continued sawing with a jammed workpiece could cause loss of control or damage to the miter saw.*
- ***After finishing the cut, release the switch, hold the saw head down and wait for the blade to stop before removing the cut-off piece.*** *Reaching with your hand near the coasting blade is dangerous.*
- ***Hold the handle firmly when making an incomplete cut or when releasing the switch before the saw head is completely in the down position.*** *The braking action of the saw may cause the saw head to be suddenly pulled downward, causing a risk of injury.*

Additional safety warnings for miter saw

- *Use only saw blades recommended by the manufacturer for wood and analogous materials.*
- *Pay attention to the cutting capacities mentioned in the technical date.*
- *Pay attention to the maximum bevel angle and miter angle settings mentioned in the technical data.*
- *Use only a saw blade diameter in accordance with the markings on the saw and information about the bore diameter and the maximum kerf of the saw blade.*
- *Use only saw blades that are marked with a speed equal or higher than the speed marked on the tool.*
- *During blade changing procedure, the rotation direction arrow on the saw blade should comply with the one on the upper fixed blade guard.*
- *Pay attention to the setting device(s) and the locking device(s) for the miter angle and bevel angel mentioned in the controls.*
- *Turn the lower retractable blade guard by hand to test if it is rotating smoothly.*
- *Pay attention to how to connect dust extraction systems mentioned in assembly.*
- *Pay attention to the cutting sequence mentioned in the operation.*
- *Pay attention to the cutting depth for non-through cuts mentioned in the controls. Ensure that the miter saw is always stable and secure.*
- *Always fix and use the extension supporter during operation.*
- *Use additional supports if needed to ensure the stability of the workpiece.*
- *The power tool shall not be wet or applied in wet environment.*
- *Check the product, its power cord and plug as well as accessories for damage before each use. Do not use the product if it is damaged or shows wear.*
- *Double check that the accessories and attachments are properly fixed.*
- *Always hold the product on its handle. Keep the handle dry to ensure safe support.*
- *Ensure that the air vents are always unobstructed and clear. Clean them if necessary with a soft brush. Blocked air vents may lead to overheating and damage the product.*
- *Switch the product off immediately if you are disturbed while working by other people entering the working area. Always let the product come to complete stop before putting it down.*
- *Do not overwork yourself. Take regular breaks to ensure you can concentrate on the work and have full control over the product.*

DOUBLE INSULATION

Double insulation is a concept in safety in electric power tools, which eliminates the need for the usual three-wire grounded power cord. All exposed metal parts are isolated from the internal metal motor components with protecting insulation. Double insulated tools do not need to be grounded.

WARNING: *The double insulated system is intended to protect the user from shock resulting from a break in the tool's internal wiring. Observe all normal safety precautions to avoid electrical shock.*

WARNING: To reduce the risk of electrical shock, double-insulated tools are equipped with a polarized plug (one blade is wider than the other). This plug will fit into a polarized outlet only one way. *If the plug does not fit, contact a qualified electrician to install a polarized outlet. Do not change the plug in any way.*

Fig. 2

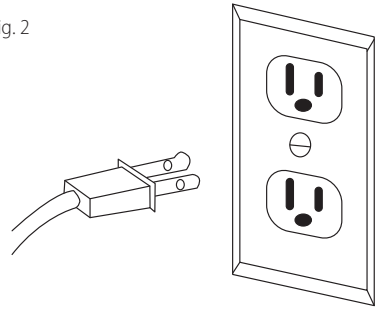

WARNING: *Double insulation does not take the place of normal safety precautions when operating this tool.*

CAUTION: *Servicing of a product with double insulation requires extreme care and knowledge of the system and should be performed only by a qualified service technician. For service, we suggest you return the tool to your nearest authorized service center for repair. Always use original factory replacement parts when servicing. Do not use power tools in wet of damp locations or expose them to rain or snow.*

ELECTRICAL CONNECTION

WARNING: *Do not touch the plug blades when inserting or removing the plug from an outlet.*

This tool has a precision-built electric motor. It should be connected to a power supply that is 120 volts, 60 Hz, AC only (normal household current). Do not operate this product on direct current (DC). A substantial voltage drop will cause a loss of power and the motor will overheat. If the tool does not operate when plugged into and outlet, double check the power supply.

GUIDELINES FOR EXTENSION CORDS

Use a proper extension cord. Make sure extension cords are in good condition. When using an extension cord, be sure to use a cord that is heavy enough to carry the drawn current needed by the saw. An undersized cord will cause a drop in line voltage, resulting in loss of power and overheating.
The table below shows the correct size to use, depending on the cord length and nameplate amperage rating. If in doubt, use the next heavier gauge. The smaller the gauge number, the heavier the cord.

MINIMUM GAUGE FOR CORD SETS

		Total Length of Cord in Feet (Meter)			
		0 - 25 (0 - 7.6)	26 - 50 (7.9 - 15.2)	51 - 100 (15.5 - 30.5)	101 - 150 (30.8 - 45.7)
Ampere Rating More Than	Not More Than	AW			
0 - 6		18	16	16	14
6 - 10		18	16	14	12
10 - 12		16	16	14	12
12 - 16		14	12	Not Recommended	

Be sure extension cords are properly wired and in good condition. Always replace a damaged extension cord or have it repaired by a qualified technician before using it. Protect extension cords from sharp objects, excessive heat, and damp or wet areas.
Use a separate electrical circuit for power tools. This circuit must not be less than #14 wire with a 15 Amp time-delayed fuse, and should be protected with a time-delayed circuit breaker or fuse. Before connecting the tool to the power line, make sure the switch is in the OFF position and the electric current is rated the same as the current stamped on the motor's nameplate. Running at a lower voltage will damage the motor.

WARNING: *To avoid electrical hazards, fire hazards, or damage to the tool, use proper circuit protection.*

WARNING: *Keep the extension cord clear of the working area. Position the cord so that it will not get caught on lumber, tools, or other obstructions while you are working with a power tool. Failure to do so can result in serious personal injury.*

WARNING: *Check extension cords before each use. If damaged, replace immediately. Never use tool with a damaged cord since touching the damaged area could cause electrical shock resulting in serious injury.*

GLOSSARY OF TERMS

The safe use of this product requires an understanding of the information on the tool and in this operator's manual as well as a knowledge of the project you are attempting. Before use of this product, familiarize yourself with all operating features and safety rules.

Blade: *A 10 in. (254 mm) blade is included with your miter saw. It will cut materials up to 12 in. (304.8 mm) wide, depending upon the angle at which the cut is being made.*

Carrying Handle: *For convenience when carrying or transporting the miter saw from one place to another, a carrying handle has been provided on top of the saw arm. To transport, turn off and unplug the saw, then lower the saw arm and lock it in the down position by depressing the head lock pin towards the saw housing.*

NOTICE: *DO NOT perform any cutting operation with the saw in the locked position.*

Depth Stop: *The depth stop allows the depth of cut of the blade to be limited. The depth stop is useful for applications such as grooving and tall vertical cuts.*

Bevel Lock Knob: *The bevel lock knob securely locks your compound miter saw at desired bevel angles. two positive stop adjustment screw have been provided on back of the saw. These adjustment screws are for making fine adjustments at 0°.*

Miter Lock Handle: *The miter lock handle securely locks the saw at desired miter angles. Tighten the handle to lock the saw in place. To release the saw, loosen the handle and squeeze the miter latch lever.*

Miter Scale: *The miter scale has nine index points provides at 0°, 15°, 22.5°, 31.6°, 45° (left) and 0°, 15°, 22.5°, 31.6°, 45°, 60° (right).*

Bevel Scale: *The bevel scale has index points provided at 0°, 22.5°, 33.6° and 45° left.*

Lower Blade Guard: *The lower blade guard is made of shock resistant, see-through plastic that provides protection from each side of the blade. It retracts over the upper blade guard as the saw is lowered into the workpiece.*

Slide Bar: *When unlocked, the saw arm will glide forward and backward the length of the slide bar for cutting various workpiece widths.*

Sliding Fence: *The sliding fence provided with this saw help hold the work piece securely when making most cuts. The sliding feature allows for clearance of the saw blade when making bevel or compound cuts. Some cuts may require that the sliding fence be removed completely to avoid interference between the fence and the blade.*

Arbor Lock: *A arbor lock has been provided for locking the arbor (keeping the saw blade from turning). Depress and hold the lock pin only while installing, changing, or removing the saw blade.*

Slide Lock Knob: *The slide lock knob locks and unlocks the sliding feature of this tool.*

Workpiece Clamp: *The workpiece clamp is mounted on the left or right base to securely clamp the workpiece.*

Base: *Supports the table, holds accessories and allows for workbench or leg set mounting.*

Mounting Holes: *To mount the miter saw to a stable surface.*

Trigger Switch: *To start the tool, squeeze the trigger. Release the trigger to turn off the miter saw.*

Detent Override: *allows the miter table to move freely to any desired angle. With the miter lock handle (1) loosened and the miter latch lever (2) squeezed (step. 1), pull the detent override (3) up (step. 2) and release the miter latch lever (2) (step. 3) to bypass the positive stops on the miter scale. To release the detent override and allow the miter table to engage the positive stops, squeeze and release the miter latch lever (2).*

Fig. 3

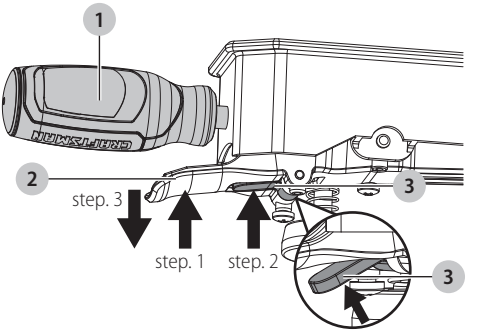

Head Lock Pin: *Locks the miter saw in the lowered position for storage and transportation.*

Switch Handle: *The switch handle contains the trigger switch. The blade is lowered into the workpiece by pushing down on the handle. The saw will return to its upright position when the handle is released.*

Wrench: *One end of the wrench is a hex wrench and the other end is a cross screwdriver. It is used for changing the blade. The storage area for the wrench is located in the rear of base.*

Wrench Storage: *Convenient storage to prevent misplacing the wrench.*

Arbor: *The arbor on which a blade is mounted*

Arbor Lock: *Allows the user to stop the blade from rotating while tightening or loosening the arbor bolt during blade replacement or removal.*

Workpiece: *The item being cut. The surfaces of a workpiece are commonly referred to as faces, ends and edges.*

Table Insert: *A plate inserted in the miter saw's table that allows for blade clearance.*

Non-through Cut: *Any cutting operation where the blade does not extend completely through the thickness of the workpiece.*

Through Sawing: *Any cutting operation where the blade extends completely through the thickness of the workpiece.*

Bevel Cut: *A cutting operation made with the blade at any angle other than 90° to the table surface.*

Miter Cut: *A cutting operation made with the work piece at any angle other than 90° to the blade.*

Compound Cut: *A crosscut made with both a miter angle and a bevel angle.*

Freehand: *Performing a cut without the workpiece being guided by a fence, miter gauge, or other aid.*

SPECIFICATIONS

Motor	120 V~ 60 Hz, 15 A
Speed (no load)	4500 RPM
Double insulated	Yes
Saw blade	10" (254 mm) 40T Carbide-tipped
Arbor size	5/8" (15.9 mm)
Dust port size	1 1/2" (38.1 mm)
Bevel range	0-48° (left)
Miter range	0-52° (left) & 0-60° (right)
Cutting capacity:	
Cross cut 0° x 0°	1 1/2" x 12" (38.1 x 304.8 mm) / 3 1/2" x 3 1/2" (88.9 x 88.9 mm)
Miter cut 45° x 0°	1 1/2" x 7 1/4" (38.1 x 184.2 mm)
Bevel cut 0° x 45°	1 1/2" x 12" (38.1 x 304.8 mm)
Compound cut 45° x 45°	1 1/2" x 7 1/4" (38.1 x 184.2 mm)
Crown capacity:	
Crown molding nested	5 1/4" (133 mm)
Baseboard against fence	3 5/8" (92 mm)
Miter/bevel positive stop angles:	
Miter detent stops	0°, 15°, 22.5°, 31.6°, 45° (left) 0°, 15°, 22.5°, 31.6°, 45°, 60° (right)
Bevel positive stops	0°, 22.5°, 33.6°, 45°
Weight	40.4 lb (18.36 kg)

LOOSE PARTS

The following items are included with your miter saw:

Fig. 4

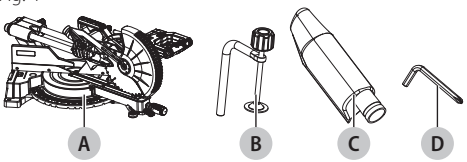

A. Miter saw assemby	1
B. Workpiece clamp	1
C. Dust bag	1
D. Wrench (in wrench storage)	1

ASSEMBLY

Unpacking your miter saw

This product requires assembly.

- Carefully lift saw from the carton by the carrying handle located at the top of the saw body, and place it on a level work surface.

CAUTION: *This tool is heavy. To avoid back injury, lift with your legs, not your back, and get help when needed.*

- This saw has been shipped with the miter table 60° right & saw head 0° and the saw head secured in the down position.
- To release the saw head, push down the switch handle and pull out the head lock pin.
- Raise the saw head by the handle. Hand pressure should remain on the switch handle to prevent sudden rise upon release of the head lock pin.
- Inspect the tool carefully to make sure that no breakage or damage occurred during shipping.
- Do not discard the packing material until you have carefully inspected and satisfactorily operated the tool.
- The saw is factory set for accurate cutting. After assembling it, check for accuracy. If shipping has influenced the settings, refer to specific procedures explained in this Operator's Manual.
- If any part is missing or damaged, do not attempt to assemble the miter saw, plug in the power cord, or turn the switch ON until the missing or damaged part is obtained and is installed correctly.

WARNING: *The use of attachments or accessories not listed in this manual might be hazardous and could cause serious personal injury.*

WARNING: *Do not attempt to modify this tool or create accessories not recommended for use with this tool. Any such alteration or modification is misuse, and could result in a hazardous condition leading to possible serious personal injury.*

WARNING: *Do not connect to the power supply until assembly is complete. Failure to comply could result in accidental starting and possible serious personal injury.*

WARNING: *Do not start the miter saw without checking for interference between the saw blade and the sliding fences. Damage could result to the blade if it strikes the sliding fence during operation of the saw.*

WARNING: *This saw can tip over if the saw head is released suddenly and the saw is not secured to a work surface. Always make sure the miter saw is securely mounted to a workbench or approved workstand. Failure to heed this warning can result in serious personal injury.*

WARNING: *Many of the illustrations in this manual show only portions of the miter saw. This is intentional so that we can clearly show points being made in the illustrations. Never operate the saw without all guards securely in place and in good operating condition.*

You will need

Items not supplied:
Framing square
5 mm Hex key

Items supplied:
Wrench (1 pc)

Unlocking and locking the saw head (Fig. 5a-5c)

Unlocking the saw head:

- To raise the saw head from its storage transport position.
- Firmly grasp the switch handle and apply downward pressure while at the same time pulling the head lock pin 1.
- Slowly raise the saw head to the up position.

Locking the saw head:

When transporting or storing the miter saw, the saw head should always be locked in the down position.

- Firmly grasp the switch handle and push the saw head down to its lowest position.
- Push the head lock pin 1 into the locking hole and check that the head lock knob is locked in place by turning the knob clockwise.

CAUTION: *To avoid injury and damage to the saw, transport and store the miter saw with the saw head locked in the down position. Never use the head lock pin to hold the saw head in a down position for cutting operations.*

Fig. 5a

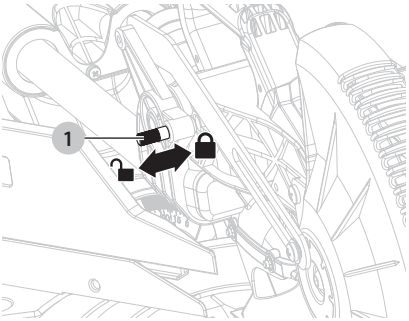

NOTICE: *To avoid damage, never carry the miter saw by the blade guard, power cord, miter lock handle or saw head. ALWAYS use the designated carrying handle 2 located on the top of the saw body or the hand holds 3 on each side underneath of the base (Fig. 4b)*

Fig. 5b

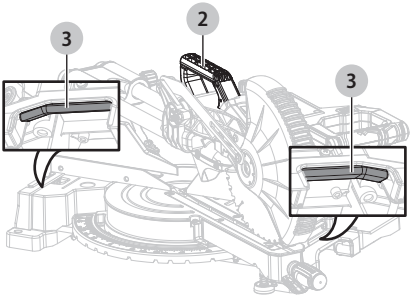

- Loosen the miter lock handle 4 by turning it counter-clockwise and squeeze the miter latch lever 5, move the table to 0°, release the miter latch lever 5 tighten the miter lock handle 4.

Fig. 5c

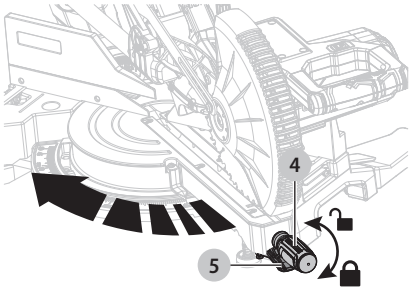

Mounting the miter saw (Fig. 6a-6c)

WARNING: *To avoid injury from unexpected saw movement:*

- *Disconnect the power cord from the outlet and lock the saw head in the lower position using the head lock pin.*
- *Lock the slide bars in place by tightening slide lock knob.*
- *To avoid back injury, lift the saw by using designated carrying handle located on the top of the saw head or the hand holds on each side underneath of the base.*
- *Never carry the miter saw by the blade guard, power cord, miter lock hand or saw arm. Carrying the tool by the plug cable could cause damage to the insulation or wire connections resulting in electric shock or fire.*
- *To avoid injury from flying debris, do not allow visitors to stand near the saw during any cutting operations.*

WARNING: *Before starting any cutting operation, clamp or bolt your miter saw to a workbench or an approved miter saw stand. If a miter saw stand is used, read operator's manual and follow the instructions for the miter saw stand. Never operate your miter saw on the floor or in a crouched position. Failure to heed this warning can result in serious personal injury.*

Mounting instructions (Fig. 6a-6b):

- For stationary use, place the saw in the desired location, directly on a workbench where there is room for handling and proper support of the workpiece. The base of the saw has four mounting holes 1 (Fig. 6a). Bolt the base of the miter saw to the work surface, using the recommended fastening method as shown in Fig. 6b.

NOTICE: *Mounting hardware is not included with this tool. Bolts, nuts, washers and screws must be purchased separately.*

Fig. 6a

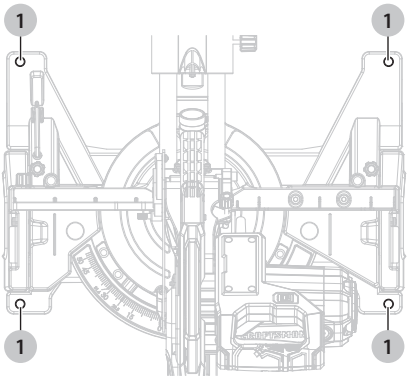

Fig. 6b

Stationary use

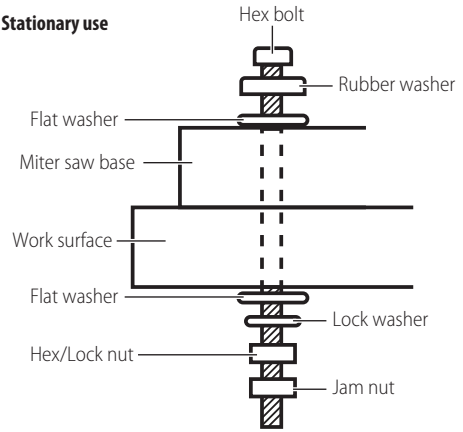

For portable use (Fig. 6a, 6c):

- Place the saw on a 3/4" (19 mm) thick piece of plywood 2 (Fig. 6c). Bolt the base of the miter saw securely to the plywood using the mounting holes 1 (Fig. 6a) on the base. Use C-clamps (not included) to clamp this mounting board to a stable work surface at the worksite. (Fig. 6c)

Fig. 6c

Portable use

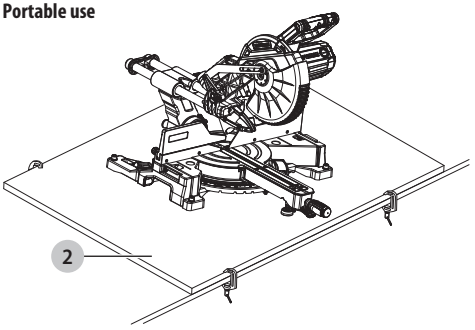

WARNING: *Carefully check the workbench or stand after mounting to make sure that no movement can occur during use. If any tipping, sliding, or walking is noted, secure the workbench or stand to the floor before operating.*

Adjusting leveling foot (Fig. 7)

NOTICE: *For stabilizing the tool the height of leveling foot 1 can be adjusted.*

Turn the leveling foot 1 clockwise or counterclockwise depending on the amount of support needed for making sliding cuts.

NOTICE: *Many of the illustrations in this manual show only portions of the compound miter saw. This is intentional so that we can clearly show points being made in the illustrations. Never operate the saw without all guards securely in place and in good operating condition.*

Fig. 7

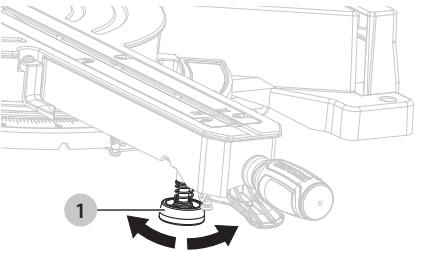

Install the workpiece clamp (Fig. 8)

NOTICE: *There are two mounting holes for the workpiece clamp. These are located just behind the miter fence on the left and right side of the base.*

The workpiece clamp provides greater control by clamping the workpiece to the miter table. It also helps to prevent the workpiece from creeping toward the saw blade. This is very helpful when cutting compound miters. Depending on the cutting operation and the size of the workpiece, it may be necessary to use a C-clamp (not included) instead of the workpiece clamp to secure the workpiece prior to making the cut. The workpiece clamp can be installed and used on either side of the blade.

To install the workpiece clamp:

- Place the workpiece clamp shaft 1 in one of the holes 2 located behind the miter fence.
- Rotate the workpiece clamp knob 3 to move it up or down as needed to secure the workpiece.

Fig. 8

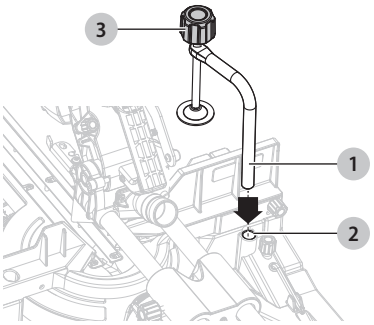

WARNING: *In some operations, the workpiece clamp assembly may interfere with the operation of the blade guard assembly. Always make sure there is no interference with the blade guard prior to beginning any cutting operation to reduce the risk of serious personal injury.*

Install the dust bag (Fig. 9)

A dust bag 1 is provided for use on this miter saw. It fits over the dust outlet 2 on the back of the saw.

NOTICE: *The dust outlet also accepts 11/2 " (38.1 mm) vacuum hose.*

WARNING: *Do not use this saw to cut and/or sand metals. The hot chips or sparks may ignite sawdust from the bag material.*

Fig. 9

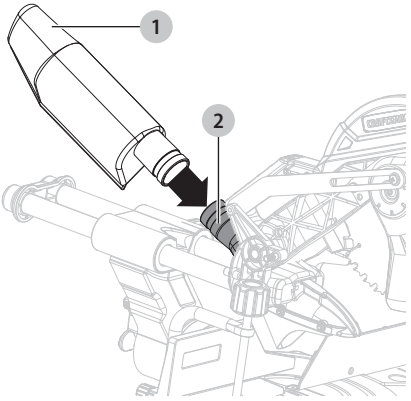

Wrench (Fig. 10)

A wrench 1 is included with this saw. One end of the wrench 1 is a phillips screwdriver and the other end is a hex key. Use the hex key end when installing or removing blade and the phillips end when removing or loosening screws. A storage area 2 for the wrench is located on the left back of the miter saw base.

Fig. 10

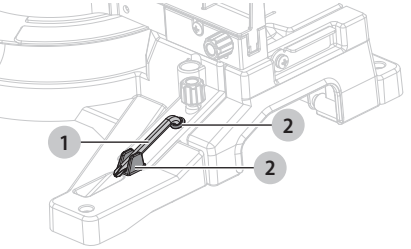

Remove and install sliding fence (Fig. 11)

Remove sliding fence:

- Loosen the fence lock knob 1 counter-clockwise.
- Slide the sliding fence 2 to the end of the slot and remove it from the slot.

Install sliding fence:

- Loosen the fence lock knob 1 counter-clockwise.
- Insert the sliding fence 2 into the slot and slide the fence to the desired position.
- Tighten the fence lock knob 1.

Fig. 11

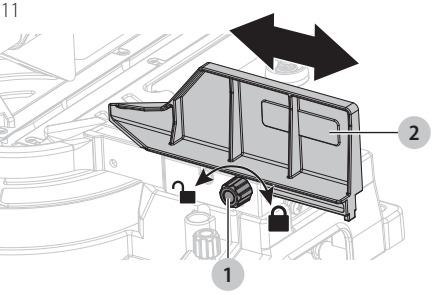

Unlocking the slide bar (Fig. 12)

- Loosen the slide lock knob 1 counterclockwise, then push the slide bar 2 forward or backward. The slide bar should always be locked in position by tightening it clockwise when transporting or storing.
- The slide lock knob 1 is located on the right of the bevel arm.

Fig. 12

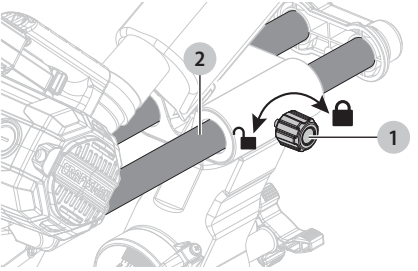

Remove and install the table insert (Fig. 13)

CAUTION: *The miter saw comes with the table insert already installed. These instructions are for replacing or adjusting either insert side.*

WARNING: *The table insert must be below the miter table. If the table insert is too high or too low, the workpiece can catch on the uneven edges resulting in binding which could result in serious personal injury.*

WARNING: *To avoid injury, ALWAYS unplug the saw to avoid accidental starting. Remove all small pieces of material from the table cavity before performing any cuts. The table insert may be removed for this purpose, but always reattach the table insert prior to performing a cutting operation.*

WARNING: *Do not start the miter saw without checking for interference between the blade and table insert. Damage could result to the blade, table insert or working table if blade strike occurs during the cutting operation.*

Never operate the saw without a table insert installed.

To remove / install:

- Unplug the saw.
- Loosen and remove the six screws 1 securing the table insert 2 .
- Lift the table insert 2 from the saw.
- To reinstall the table insert 2 , reposition the left and right side inserts on either side of the cut line, replace the six screws 1 and tighten, being careful not to overtighten which can cause the table insert to bow or bend.
- Check for blade clearance by moving the slide bar through full motion the blade in table slot. If either side of the table insert hits the saw blade, loosen the three screws for that side and adjust. Tighten the screws and check again for blade clearance.

Fig. 13

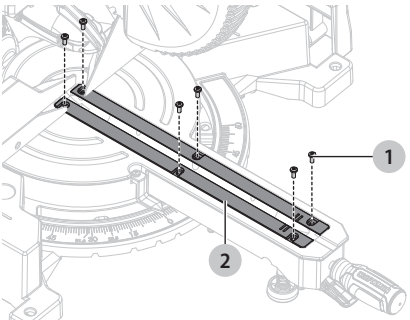

Removing and installing the blade (Fig. 14a-14c)

WARNING: *Only use a 10" (254 mm) diameter blade. Never use a blade that is too thick to allow the outer flange to engage with the flats on the arbor. Larger blades will come in contact with the blade guards, while thicker blades will prevent the arbor bolt from securing the blade on the arbor. Either of these situations could result in a serious accident and can cause serious personal injury. To avoid injury from an accidental start, make sure the switch is in the OFF position and the plug is not connected to the power source outlet.*

WARNING: *Make sure the arbor lock is not engaged before reconnecting saw to power source. Never engage arbor lock when blade is rotating.*

- Unplug the saw.
- Raise the lower blade guard 1 out of the way and hold it up.
- Loosen the screw 2 until it disengages the guard plate 3 .

NOTICE: *Do not remove the screw 2 .*

- Swing the guard plate 3 up and out of the way. (Fig. 14a)
- Press in the arbor lock 4 on the back of the saw's head and hold it in. (Fig. 14b)
- Loosen the arbor bolt 5 with wrench 6 (supplied), Remove the arbor bolt 5 , flat washer 7 and outer flange 8 . (Fig. 14c)

NOTICE: *The arbor bolt has a left-handed thread and removes by turning clockwise.*

NOTICE: *Make sure the inner flange 9 stays in place on the arbor 10 .*

- If replacing a used blade, remove the blade 11 . Install the new blade. Make sure that the blade's rotation arrow points in the same direction as the rotation arrow on the upper blade guard.
- Replace the outer flange 8 , flat washer 7 and arbor bolt 5 . Position the cupped side of the outer flange against the blade. Hold in the arbor lock 4 and use wrench to tighten the arbor bolt by turning it counter-clockwise. Release the arbor lock.
- Rotate the guard plate back into place and secure it with the guard plate screw.

WARNING: *Make sure the lower blade guard operates smoothly and properly protects from the blade before using the saw.*

WARNING: *To avoid injury, never use the saw without the guard plate securely in place. It keeps the arbor bolt from falling out if it accidentally loosens and helps prevent the spinning blade from coming off the saw.*

WARNING: *Make sure the flanges are clean and properly arranged. Lower the blade into the lower table and check for any contact with the metal base or the miter table.*

Fig. 14a

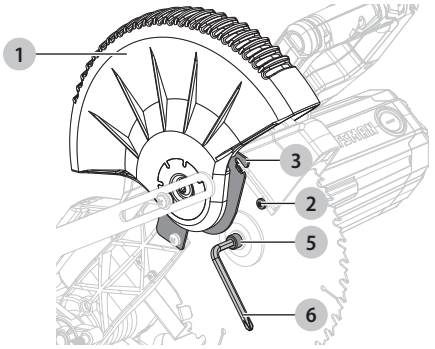

Fig. 14b

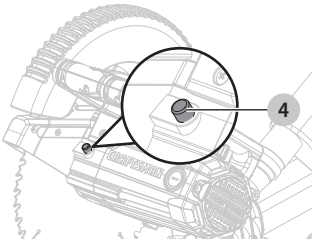

Fig. 14c

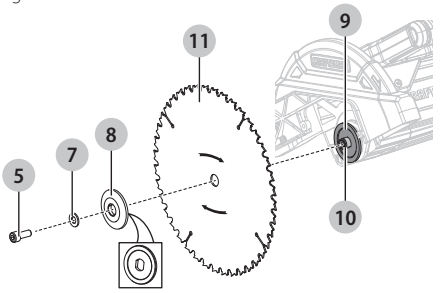

ADJUSTMENT

CAUTION: *Your product's miter cut and bevel cut angles have been preset at the factory but can and will be misaligned by rough handling and transportation. It is essential that your new miter saw be realigned before use. Please adhere to the following resetting instructions.*

Squaring the blade to the fence (Fig. 15a-15b)

- Unplug the saw.
- Set the bevel and miter angles to 0°.
- Lower and lock the saw head in the "DOWN" position.
- Removing the sliding fence.
- Place a framing square 1 against the fence 2 and saw blade 3 .

NOTICE: *Do not touch the tips of the blade teeth with the square.*

Fig. 14a

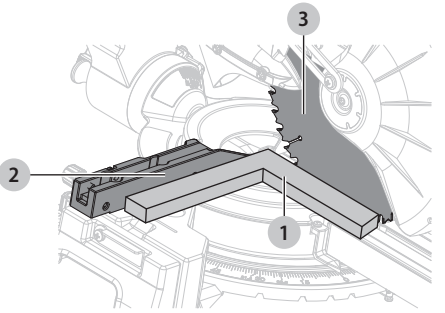

- If the blade is not 90° to the fence, loosen the four fence locking bolts 4 with the wrench 5 (supplied).
- Adjust the fence to be 90° to the blade and tighten the four fence locking bolts 4 .

Fig. 14b

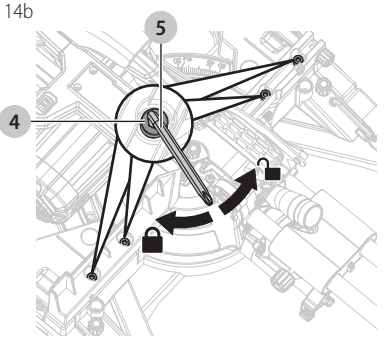

CAUTION: *If the saw has not been used recently, recheck blade squareness to the fence and readjust if necessary.*

- After fence has aligned, replace the sliding fence, using a scrap piece of wood, make a cut at 90° then check squareness on the piece. Readjust if necessary.

Bevel stop adjustment (Fig. 16a-16c)

WARNING: *To avoid injury from an accidental start, make sure the switch is in the OFF position and the plug is not connected to the power source outlet.*

90° (0°) Bevel adjustment (Fig. 16a-16b)

- Unplug the saw.
- Set the miter table at 0°.
- Pull out the lock button 1 and loosen bevel lock knob 2 , tilt the cutting arm completely to the right. Tighten the bevel lock knob 2 .
- Pull down the cutting head until the blade just enters the table insert.
- Place a framing square 3 on the miter table 4 and up against the saw blade 5 .

Fig. 16a

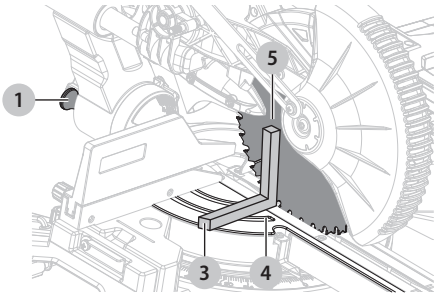

- If the blade is not 90° (0°) square with the miter table, loosen the bevel lock knob 2 , tilt the cutting head completely to the left, loosen two bolts 6 on back of saw with a 5 mm hex key (not supplied).
- Tilt the cutting arm back to the right at 90° (0°) bevel and recheck for alignment.
- Repeat above steps if further adjustment is needed.
- Tighten bevel lock knob 2 and two bolts 6 when alignment is achieved.

Fig. 16b

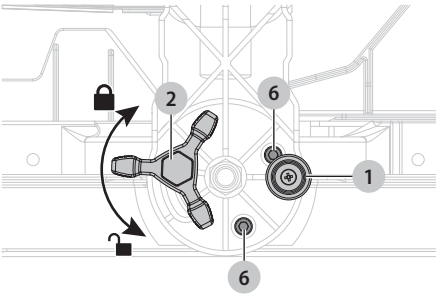

90° (0°) Bevel pointer adjustment (Fig. 16c)

- When the blade is exactly 90° (0°) to the table, loosen the bevel indicator screw 7 using the wrench (supplied).
- Adjust bevel indicator 8 to the "0" mark on the bevel scale 9 and retighten the screw.

Fig. 16c

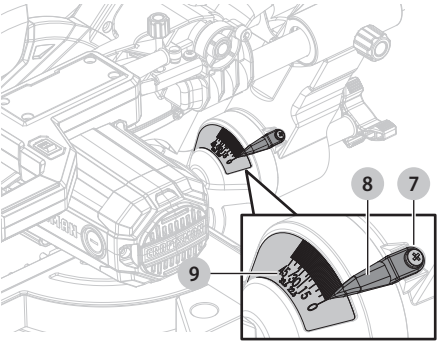

45° Bevel adjustment

- If the 90° (0°) bevel have been set correctly, you do not need to adjust the 45° bevel.

Miter scale (Fig. 17)

The miter scale can be easily read, showing miter angles from 0° to 52° to the left, and 0° to 60° to the right. The miter saw table has nine of the most common angle settings with positive stops at 0°, 15°, 22.5°, 31.6°, 45° (left) and 0°, 15°, 22.5°, 31.6°, 45°, 60° (right).

To adjust miter angles

- Loosen the miter lock handle 1 counterclockwise to unlock the table and squeeze the miter latch lever 2 .
- Move the table to align the pointer 3 to the desired degree on miter scale 4 .
- Release the miter latch lever 2 and tighten the miter lock handle 1 .

Miter angle pointer adjustment

- Unplug the saw.
- Move the miter table to the 0° positive stop.
- Loosen the pointer screw 5 and adjust the indicator 3 to the 0° mark on the miter scale 4 and retighten the screw.

Fig. 17

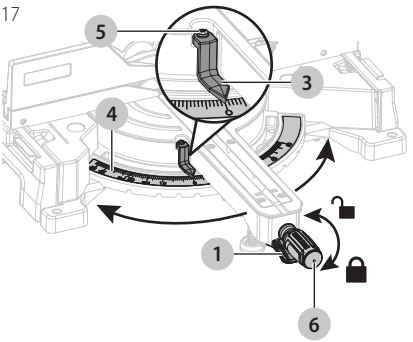

Depth stop adjustment (Fig. 18)

When used, the depth stop 1 limits the downward travel of the blade when doing non-through cuts.

- Unlock the head lock pin.
- Raise the saw head assembly.
- Turn the depth stop 1 counter-clockwise to position B to use the depth adjustment knob 2 setting.
- Pull down on the saw head to check the current setting.
- To change the setting, turn the depth adjustment knob 2 clockwise to decrease depth and counter-clockwise to increase depth.
- When non-through cuts finished, turn the depth stop 1 clockwise to position A.

Fig. 18

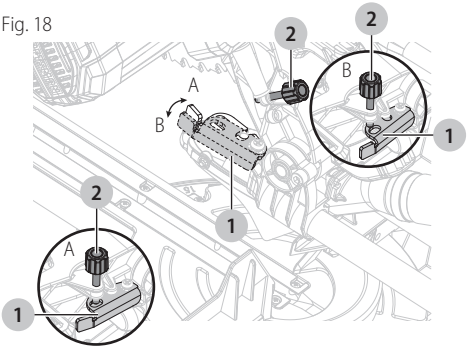

Position A: for through cutting
Position B: for non-through cutting

OPERATION

When transporting the miter saw, turn off and unplug the saw, then lower the saw head and lock it in the "DOWN" position. Always use the carrying handle or hand holds when lifting the saw.

WARNING: *To avoid injury from an accidental start, make sure the switch is in the OFF position and the plug is not connected to the power source outlet.*

WARNING: *Do not allow familiarity with tools to make you careless. Remember that a careless fraction of a second is sufficient to inflict serious injury.*

WARNING: *Always wear eye protection with side shields marked to comply with ANSI Z87.1. Failure to do so could result in objects being thrown into your eyes, resulting in possible serious injury.*

WARNING: *Do not use any attachments or accessories not recommended by the manufacturer of this tool. The use of attachments or accessories not recommended can result in serious personal injury.*

WARNING: *Never use another person as an additional support for a workpiece that is longer or wider than the miter table, or to help feed, support, or pull the workpiece.*

Applications

This product has been designed only for the purposes listed below:

- Only cross cutting wood and wood-like products (do not cut metals, ceramics or masonry products.)
- Bevel and compound cutting
- Cross cutting wide workpieces

WARNING: *Never cut metals ceramics or masonry products with this tool. This miter saw is designed for use on wood and wood-like products only.*

WARNING: *Before starting any cutting operation, clamp or bolt the compound miter saw to a workbench. Never operate the miter saw on the floor or in a crouched position. Failure to heed this warning can result in serious personal injury.*

WARNING: *To avoid serious personal injury, always tighten the miter lock handle and bevel lock knob securely before making a cut. Failure to do so could result in movement of the miter table or saw head while making a cut.*

WARNING: *To reduce the risk of serious personal injury, always wait for the blade to stop completely, turn off the tool and disconnect it from the power source before attempting to move it, change accessories or make any adjustments.*

WARNING: *Before each use, verify that the blade is free of cracks, loose teeth, missing teeth, or any other damage. Do not use if damage is observed or suspected.*

NOTICE: *Do not start the compound miter saw without checking for interference between the blade and the miter fence. Damage could result to the blade if it strikes the miter fence during operation of the saw.*

Body and hand position

WARNING: *Never place hands near the cutting area. Proper positioning of your body and hands when operating the miter saw will make cutting easier and safer. Keep children away. Keep all visitors at a safe distance from the miter saw. Make sure bystanders are clear of the saw and work piece. Do not force the saw. It will do the job better and safer at its designed rate.*

Starting a cut:

- Place hands at least 3 in. (76.2 mm) away from the cutting path of the blade.
- Hold workpiece firmly against the fence to prevent movement toward the blade.

- With the power switch OFF, bring the saw blade down to the workpiece to see the cutting path of the blade.
- Squeeze trigger switch to start saw.
- Lower blade into workpiece with a firm downward motion.

WARNING: *To avoid serious personal injury, keep hands outside the no hands zone, at least 3 in. from the blade. Never perform any cutting operation freehand (without holding workpiece against the fence). The blade could grab the workpiece if it slips or twists.*

Finishing a cut:

- Hold the saw head in the down position.
- Release trigger switch and wait for all moving parts to stop before moving your hands and raising the saw head.
- Unplug the miter saw.

Before freeing jammed material:

- Release trigger switch.
- Wait for all moving parts to stop.
- Unplug the miter saw.

ON/OFF switch (Fig. 19)

This miter saw is equipped with an ON/OFF trigger switch 1.

Turning saw on

- Press either the left safety lock button 2 or the right safety lock button 3 down to unlock the ON/OFF switch 1.
- To turn the miter saw on, depress the ON/OFF switch 1 located in the switch handle.

Turning saw off

- To turn it off, release the ON/OFF switch 1.

WARNING: *To avoid injury, after completing a cut and releasing the trigger switch, allow the blade to stop before raising the saw head.*
To avoid injury, check and tighten the arbor bolt periodically.

Fig. 19

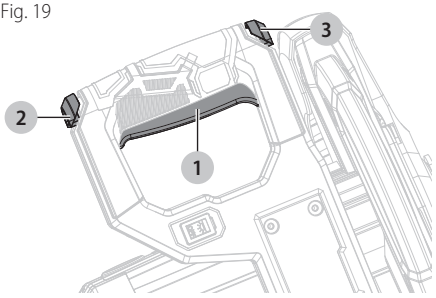

Use of precision blade guide systems ON/OFF switch (Fig. 20)

NOTICE: *The miter saw must be connected to a power source.*

- The precision blade guide systems is equipped with an ON/OFF switch 1. The precision blade guide system is independent of the miter saw's trigger switch.
- The precision blade guide systems casts the shadow of the blade onto the workpiece. This results in greater accuracy of cuts and requires no adjustments.
- To use this feature, press "☀" on the ON/OFF switch to turn on.
- Lower the saw head so the blade is approximately 1/4 in. from the workpiece. The shadow of the blade will be projected onto the workpiece, indicating where the blade teeth will make contact as the cut is made.

Fig. 20

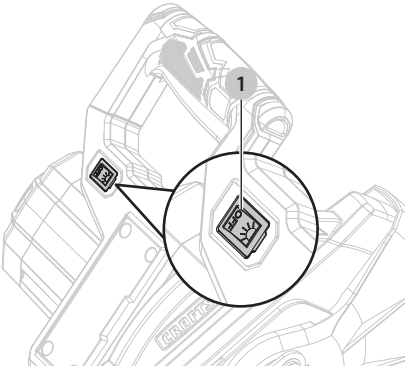

Extending and removing sliding fence (Fig. 21)

WARNING: *The sliding fence must be extended or removed when making any bevel cut. Failure to extend or remove the sliding fence will not allow enough space for the blade to pass through which could result in serious injury. At extreme miter or bevel angles the saw blade may also contact the sliding fence.*

Extending

- Loosen the fence lock knob 1 counter-clockwise.
- Extend the sliding fence 2 by sliding it out.
- Tighten the fence lock knob 1 clockwise to lock the sliding fence.

To remove the sliding fence, refer to the section "Remove and install sliding fence".

WARNING: *DRY RUN — It is important to know where the blade will intersect with workpiece during cutting operations. Always perform a simulated cutting sequence with the power tool switch OFF to gain an understanding of the projected path of the saw blade. At some extreme angles, the sliding fence might have to be the required location or removed to ensure proper clearance prior to making the cut.*

WARNING: *When transporting the saw, always secure the sliding fence and lock it.*

Fig. 21

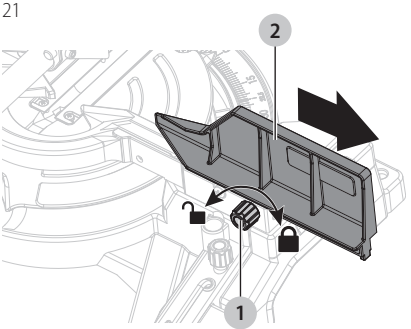

Sliding the saw head (Fig. 22)

CAUTION: *To reduce the risk of injury, return the slide bars to the full rear position after each crosscut operation.*

- For chop cutting operations on small workpieces, slide the saw head assembly completely toward the rear of the unit and tighten the slide lock knob 1.
- To cut wide boards, the slide lock knob 1 must be loosened to allow the saw head to slide freely.

Fig. 22

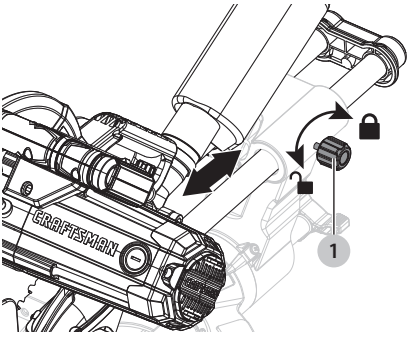

Using the workpiece clamp (Fig. 23)

- Turn the knob 1 on the workpiece clamp 2, adjust the workpiece clamp upward or downward to the desired position.

Fig. 23

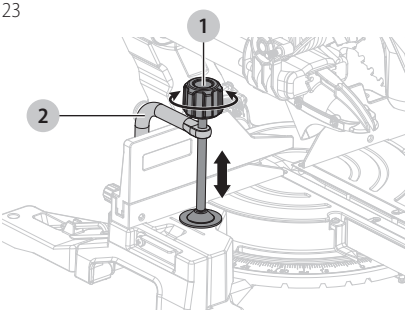

Support long workpieces (Fig. 24a-24b)

Long pieces need extension table supports.

WARNING: *Never use another person as a substitute for a extension table, as additional support for a workpiece that is longer than the basic table, or to help feed, support or pull the workpiece.*

- Loosen extension rail lock knob 1 (one on each side rear of the saw).
- Slide extension table 2 to desired position.
- Tighten extension rail lock knob 1.
- The extension table can let the workpiece lay flat on the base of the saw and working table during the cutting operation. Use the suitable workpiece clamp or a C-clamp to secure the workpiece.

Fig. 24a

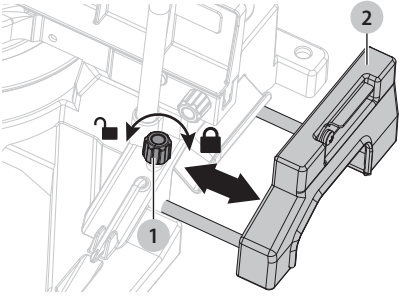

Fig. 24b

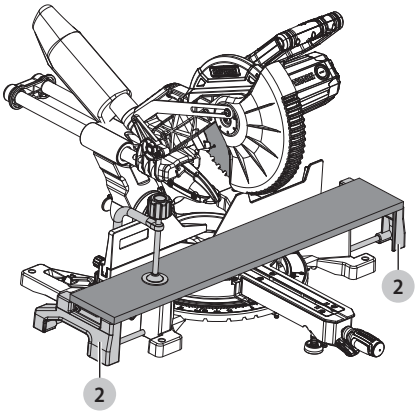

Cutting with your miter saw

WARNING: *When using a workpiece clamp or C-clamp to secure your workpiece, clamp workpiece on one side of the blade only. The workpiece must remain free on one side of the blade to prevent the blade from binding in workpiece. The workpiece binding the blade will cause motor stalling and kickback. This situation could cause an accident resulting in possible serious personal injury.*

WARNING: *NEVER move the workpiece or make adjustment to any cutting angle while the saw is running and the blade is rotating. Any slip can result in contact with the blade causing serious personal injury.*

WARNING: *Do not try to cut narrow pieces using the sliding feature. Failure to heed this warning could result in serious personal injury.*

WARNING: *Securely tighten the slide lock knob when making any non-sliding cuts. Failure to tighten the knob could result in the saw head moving during the cutting operation.*

CAUTION: *It may be necessary to slide the sliding fence out to the required location or remove it to ensure proper clearance prior to making the cut.*

Chop cuts (Fig. 25)

Chop cuts are used mainly for narrow workpieces.

- Turn the slide lock knob counter-clockwise to release the slide bars.
- Slide the saw head to the rear as far as it will go. Tighten the slide lock knob by turning the knob clockwise.
- Place the workpiece flat on the miter table with one edge securely against the fence. If the board is warped, place the convex side against the fence. If the concave edge of a board is placed against the fence, the board could collapse on the blade at the end of the cut, jamming the blade. (See Fig. 34a-34b)
- When cutting long pieces of lumber or molding, support the opposite end of the workpiece with extension table. (See Fig. 24b)
- Align cutting line on the workpiece with the edge of saw blade.
- Turn the precision blade guide systems ON/OFF switch on to project the blade shadow onto the workpiece.
- Grasp the workpiece firmly with one hand and secure it against the fence. Use the workpiece clamp or a C-clamp to secure the workpiece when possible. Make sure that the clamp does not interfere with the cutting operation.
- Before turning on the saw, perform a dry run of the cutting operation to make sure that no problems will occur when the cut is made.
- Grasp the switch handle firmly. Turn the switch on and allow several seconds for the blade to reach maximum speed.
- Slowly lower the blade into and through the workpiece.
- Release the switch trigger and allow the saw blade to stop rotating before raising the blade out of workpiece and removing the workpiece from the miter table.

Fig. 25

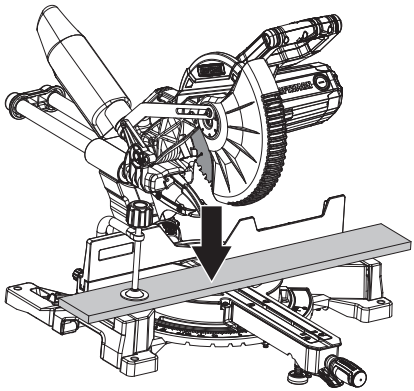

Slide cuts (Fig. 26a-26b)

This type of cut is used mainly for wide pieces. The slide lock knob is loosened and saw head is pulled towards the operator. The saw head is lowered to the workpiece and then pushed to the rear of the saw to make the cut.

WARNING: *Never make a cut by pulling the saw toward you as the blade can climb on top of the workpiece and come toward you. Failure to heed this warning could result in serious personal injury.*

- Pull out the head lock pin and lift saw head to its full height.

- Place the workpiece flat on the miter table with one edge securely against the fence. If the board is warped, place the convex side against the fence. If the concave edge of a board is placed against the fence, the board could collapse on the blade at the end of the cut, jamming the blade. (See Fig. 34a-34b)
- When cutting long pieces of lumber or molding, support the opposite end of the workpiece with extension table. (See Fig. 24b)
- Align cutting line on the workpiece with the edge of saw blade.
- Turn the precision blade guide systems ON/OFF switch on to project the blade shadow onto the workpiece.
- Loosen the slide lock knob by turning the knob counter-clockwise.
- Grasp the workpiece firmly with one hand and secure it against the fence. Use the workpiece clamp or a C-clamp to secure the workpiece when possible. Make sure that the clamp does not interfere with the cutting operation.
- Before turning on the saw, perform a dry run of the cutting operation to make sure that no problems will occur when the cut is made.
- With the saw off, grasp the switch handle firmly then pull the saw forward until the blade arbor (center of the saw blade) is over the front of the workpiece.
- Turn the saw on and allow several seconds for the blade to reach maximum speed.
- Slowly lower the blade into and through the front edge of the workpiece.
- Push the switch handle away from you and toward the bevel scale at the back of the saw.
- Release the switch trigger and allow the saw blade to stop rotating before raising the blade out of workpiece and removing the workpiece from the miter table.

Fig. 26a

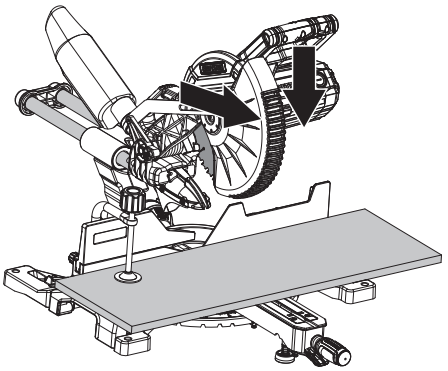

Fig. 26b

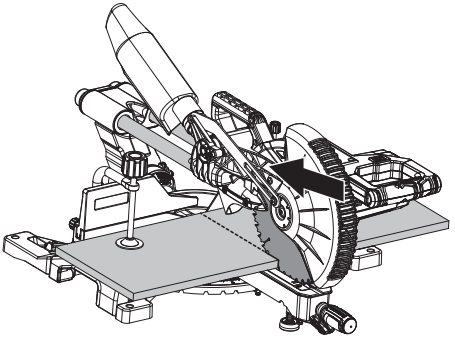

Miter cut (Fig. 27a-27b)

A miter cut is one that is at an angle across the horizontal surface of the material. 45° miter cuts to join two pieces in a right angle corner are common. A 30° cut is often used for a scarf joint or to make a chamfered end.

- Loosen the miter lock handle ❶ by turning it counter-clockwise and squeeze the miter latch lever ❷.
- Move the table to the desired angle.
- Release the miter latch and tighten the miter lock handle after adjusting the miter angle.

NOTICE: *You can quickly locate 0°, 15°, 22.5°, 31.6° and 45° left or 0°, 15°, 22.5°, 31.6°, 45° and 60° right by releasing the miter latch lever as you rotate the miter table. The table will seat itself in one of the positive stop notches, located in the miter table base.*

- Place the workpiece flat on the miter table with one edge securely against the fence. If the board is warped, place the convex side against the fence. If the concave edge of a board is placed against the fence, the board could collapse on the blade at the end of the cut, jamming the blade. (See Fig. 34a-34b)
- When cutting long pieces of lumber or molding, support the opposite end of the workpiece with extension table. (See Fig. 24b)
- Align cutting line on the workpiece with the edge of saw blade.
- Turn the precision blade guide systems ON/OFF switch on to project the blade shadow onto the workpiece.
- Grasp the workpiece firmly with one hand and secure it against the fence. Use the workpiece clamp or a C-clamp to secure the workpiece when possible.
- Before turning on the saw, perform a dry run of the cutting operation to make sure that no problems will occur when the cut is made.
- Grasp the saw handle firmly. Turn the switch on and allow several seconds for the blade to reach maximum speed.
- Slowly lower the blade into and through the workpiece.

- Release the switch trigger and allow the saw blade to stop rotating before raising the blade out of workpiece and removing the workpiece from the miter table.

Fig. 27a

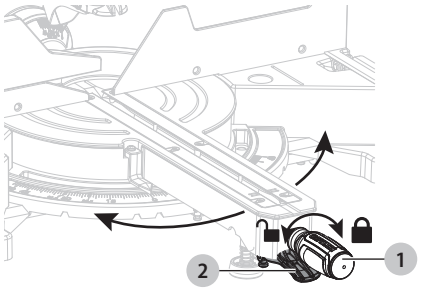

Fig. 27b

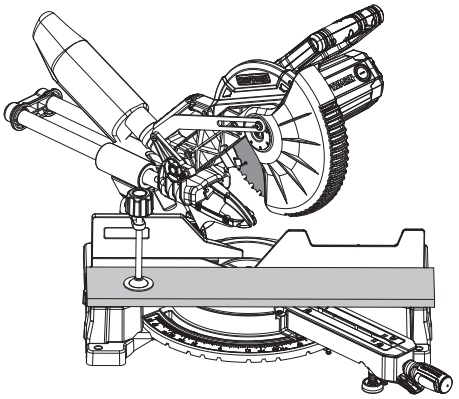

Crosscut (Fig. 28)

A crosscut is a cut made across the grain of the workpiece. A straight crosscut is a cut made with the miter table set at the 0° position.
Miter crosscuts are made with the miter table set at an angle other than 0°, either left or right.

- Loosen the miter lock handle by turning it counter-clockwise.
- Set the table to the desired angle: refer to "Miter cut".
- Release the miter latch and tighten the miter lock handle after adjusting the miter angle.
- Place the workpiece flat on the miter table with one edge securely against the fence. If the board is warped, place the convex side against the fence. If the concave edge of a board is placed against the fence, the board could collapse on the blade at the end of the cut, jamming the blade. (See Fig. 34a-34b)
- When cutting long pieces of lumber or molding, support the opposite end of the workpiece with extension table. (See Fig. 24b)
- Align cutting line on the workpiece with the edge of saw blade.
- Turn the precision blade guide systems ON/OFF switch on to project the blade shadow onto the workpiece.
- Grasp the workpiece firmly with one hand and secure it against the fence. Use the workpiece clamp or a C-clamp to secure the workpiece when possible.
- Before turning on the saw, perform a dry run of the cutting operation to make sure that no problems will occur when the cut is made.
- Grasp the saw handle firmly. Turn the switch on and allow several seconds for the blade to reach maximum speed.
- Slowly lower the blade into and through the workpiece.

Fig. 28

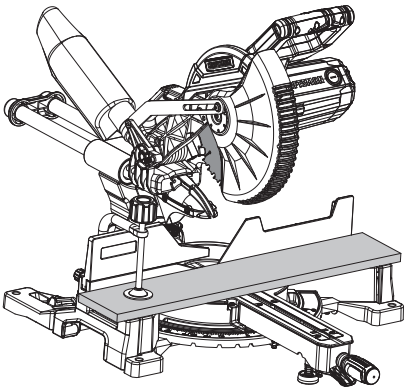

Bevel cut (Fig. 29a-29b)

CAUTION: *It may be necessary to slide the sliding fence out to the required location or remove it to ensure proper clearance prior to making the cut.*

CAUTION: *Use a clamping position that does not interfere with the cutting operation.*

A bevel cut is a cut made across the grain of the workpiece with the blade at an angle other than 90° to the miter table. A straight bevel cut is made with the miter table set at the 0° position and the cutting head set at a bevel angle between 0° and 48° left.

- Loosen the miter lock handle by turning it counter-clockwise and squeeze the miter latch lever.
- Move the table to the desired angle.
- Release the miter latch and tighten the miter lock handle after adjusting the miter angle.

NOTICE: *You can quickly locate 0°, 15°, 22.5°, 31.6° and 45° left or 0°, 15°, 22.5°, 31.6°, 45° and 60° right by releasing the miter latch lever as you rotate the miter table. The table will seat itself in one of the positive stop notches, located in the miter table base.*

- Loosen the bevel lock knob **1** at the rear of the saw.
- For adjustments at any bevel angle, pull the lock button

(2) out backward rotate it a 1/4 turn in either direction and releasing it in that position (A in Fig. 29a). Bevel angles can be set from 0° to 48°. Move the saw head assembly to the desired angle.

- To use the quick pre-set stops, pull the lock button (2) out backward until the saw head assembly can be moved and then release the lock button. The saw head assembly will lock into place at often-used bevel angles, including 0°, 22.5°, 33.6°, and 45° on left side.
- Lock the saw head assembly into position by tighten the bevel lock knob clockwise.
- Place the workpiece flat on the miter table with one edge securely against the fence. If the board is warped, place the convex side against the fence. If the concave edge of a board is placed against the fence, the board could collapse on the blade at the end of the cut, jamming the blade. (See Fig. 34a-34b)
- When cutting long pieces of lumber or molding, support the opposite end of the workpiece with extension table. (See Fig. 24b)
- Align cutting line on the workpiece with the edge of saw blade.
- Turn the precision blade guide systems ON/OFF switch on to project the blade shadow onto the workpiece.
- Grasp the workpiece firmly with one hand and secure it against the fence. Use the workpiece clamp or a C-clamp to secure the workpiece when possible.
- Before turning on the saw, perform a dry run of the cutting operation to make sure that no problems will occur when the cut is made.
- Grasp the saw handle firmly. Turn the switch on and allow several seconds for the blade to reach maximum speed.
- Slowly lower the blade into and through the workpiece.
- Release the switch trigger and allow the saw blade to stop rotating before raising the blade out of workpiece and removing the workpiece from the miter table.

Fig. 29a

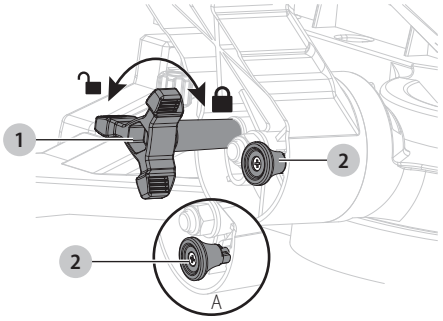

Fig. 29b

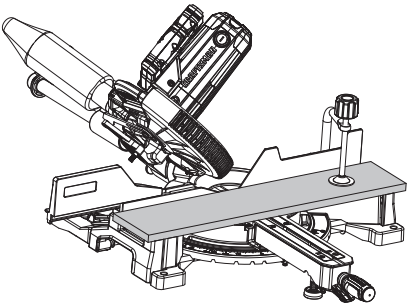

Compound miter cut (Fig. 30a-30b)

CAUTION: *It may be necessary to slide the sliding fence out to the required location or remove it to ensure proper clearance prior to making the cut.*

CAUTION: *Use a clamping position that does not interfere with the cutting operation.*

A compound miter cut is a cut made using a miter angle and a bevel angle at the same time. This type of cut is used to make picture frames, cut molding, make boxes with sloping sides, and for certain roof framing cuts.
To make this type of cut the control arm on the miter table must be rotated to the correct angle and the saw arm must be tilted to the correct bevel angle. Care should always be taken when making compound miter setups due to the interaction of the two angle settings.
Adjustments of miter and bevel settings are interdependent with one another. Each time you adjust the miter setting you change the effect of the bevel setting. Also, each time you adjust the bevel setting you change the effect of the miter setting.
It may take several settings to obtain the desired cut. The first angle setting should be checked after setting the second angle, since adjusting the second angle affects the first.
Once the two correct settings for a particular cut have been obtained, always make a test cut in scrap material before making a finish cut in good material.

- Loosen the miter lock handle by turning it counter-clockwise and squeeze the miter latch lever.
- Move the table to the desired angle.
- Release the miter latch and tighten the miter lock handle after adjusting the miter angle.

NOTICE: *You can quickly locate 0°, 15°, 22.5°, 31.6° and 45° left or 0°, 15°, 22.5°, 31.6°, 45° and 60° right by releasing the miter latch lever as you rotate the miter table. The table will seat itself in one of the positive stop notches, located in the miter table base.*

- Loosen the bevel lock knob at the rear of the saw.
- For adjustments at any bevel angle, pull the lock button out backward rotate it a 1/4 turn in either direction and releasing it in that position (A in Fig. 29a). Bevel

angles can be set from 0° to 48°. Move the saw head assembly to the desired angle.

- To use the quick pre-set stops, pull the lock button out backward until the saw head assembly can be moved and then release the lock button. The saw head assembly will lock into place at often-used bevel angles, including 0°, 22.5°, 33.6°, and 45° on left side.
- Lock the saw head assembly into position by tighten the bevel lock knob clockwise.
- Recheck miter angle setting. Make a test in scrap material.
- Place the workpiece flat on the miter table with one edge securely against the fence. If the board is warped, place the convex side against the fence. If the concave edge of a board is placed against the fence, the board could collapse on the blade at the end of the cut, jamming the blade. (See Fig. 34a-34b)
- When cutting long pieces of lumber or molding, support the opposite end of the workpiece with extension table. (See Fig. 24b)
- Align cutting line on the workpiece with the edge of saw blade.
- Turn the precision blade guide systems ON/OFF switch on to project the blade shadow onto the workpiece.
- Grasp the workpiece firmly with one hand and secure it against the fence. Use the workpiece clamp or a C-clamp to secure the workpiece when possible.
- Before turning on the saw, perform a dry run of the cutting operation to make sure that no problems will occur when the cut is made.
- Grasp the saw handle firmly. Turn the switch on and allow several seconds for the blade to reach maximum speed.
- Slowly lower the blade into and through the workpiece.

Fig. 30a

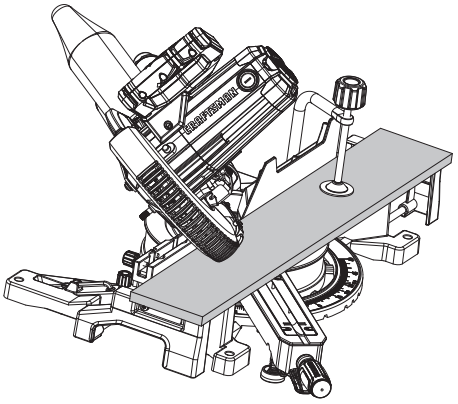

Fig. 30b

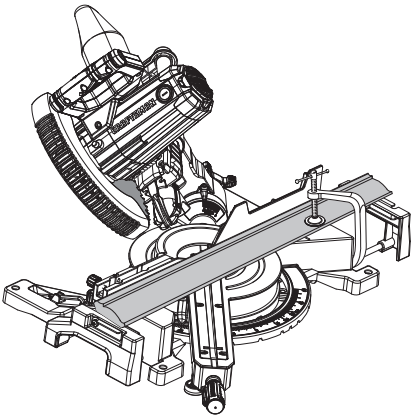

Cutting compound miters

To aid in making the correct settings, the compound angle setting chart below has been provided. Since compound cuts are the most difficult to accurately obtain, trial cuts should be made in scrap material, and much thought and planning made, prior to making your required cut.

PITCH OF SIDE	NUMBER OF SIDES						
	4	5	6	7	8	9	10
0°	M- 45.00° B- 0.00°	M- 36.00° B- 0.00°	M- 30.00° B- 0.00°	M- 25.71° B- 0.00°	M- 22.50° B- 0.00°	M- 20.00° B- 0.00°	M- 18.00° B- 0.00°
5°	M- 44.89° B- 3.53°	M- 35.90° B- 2.94°	M- 29.91° B- 2.50°	M- 25.63° B- 2.17°	M- 22.42° B- 1.91°	M- 19.93° B- 1.71°	M- 17.94° B- 1.54°
10°	M- 44.56° B- 7.05°	M- 35.58° B- 5.86°	M- 29.62° B- 4.98°	M- 25.37° B- 4.32°	M- 22.19° B- 3.81°	M- 19.72° B- 3.40°	M- 17.74° B- 3.08°
15°	M- 44.01° B- 10.55°	M- 35.06° B- 8.75°	M- 29.15° B- 7.44°	M- 24.95° B- 6.45°	M- 21.81° B- 5.68°	M- 19.37° B- 5.08°	M- 17.42° B- 4.59°
20°	M- 43.22° B- 14.00°	M- 34.32° B- 11.60°	M- 28.48° B- 9.85°	M- 24.35° B- 8.53°	M- 21.27° B- 7.52°	M- 18.88° B- 6.72°	M- 16.98° B- 6.07°
25°	M- 42.19° B- 17.39°	M- 33.36° B- 14.38°	M- 27.62° B- 12.20°	M- 23.56° B- 10.57°	M- 20.58° B- 9.31°	M- 18.26° B- 8.31°	M- 16.41° B- 7.50°
30°	M- 40.89° B- 20.70°	M- 32.18° B- 17.09°	M- 26.57° B- 14.48°	M- 22.64° B- 12.53°	M- 19.73° B- 11.03°	M- 17.50° B- 9.85°	M- 15.72° B- 8.89°
35°	M- 39.32° B- 23.93°	M- 30.76° B- 19.70°	M- 25.31° B- 16.67°	M- 21.53° B- 14.41°	M- 18.74° B- 12.68°	M- 16.60° B- 11.31°	M- 14.90° B- 10.21°
40°	M- 37.45° B- 27.03°	M- 29.10° B- 22.20°	M- 23.86° B- 18.75°	M- 20.25° B- 16.19°	M- 17.60° B- 14.24°	M- 15.58° B- 12.70°	M- 13.98° B- 11.46°
45°	M- 35.26° B- 30.00°	M- 27.19° B- 24.56°	M- 22.21° B- 20.70°	M- 18.80° B- 17.87°	M- 16.32° B- 15.70°	M- 14.43° B- 14.00°	M- 12.94° B- 12.62°
50°	M- 32.73° B- 32.80°	M- 25.03° B- 26.76°	M- 20.36° B- 22.52°	M- 17.20° B- 19.41°	M- 14.91° B- 17.05°	M- 13.17° B- 15.19°	M- 11.80° B- 13.69°
55°	M- 29.84° B- 35.40°	M- 22.62° B- 28.78°	M- 18.32° B- 24.18°	M- 15.44° B- 20.82°	M- 13.36° B- 18.27°	M- 11.79° B- 16.27°	M- 10.56° B- 14.66°
60°	M- 26.57° B- 37.76°	M- 19.96° B- 30.60°	M- 16.10° B- 25.66°	M- 13.54° B- 22.07°	M- 11.70° B- 19.35°	M- 10.31° B- 17.23°	M- 9.23° B- 15.52°
65°	M- 22.91° B- 39.86°	M- 17.07° B- 32.19°	M- 13.71° B- 26.95°	M- 11.50° B- 23.16°	M- 9.93° B- 20.29°	M- 8.74° B- 18.06°	M- 7.82° B- 16.26°
70°	M- 18.88° B- 41.64°	M- 13.95° B- 33.53°	M- 11.17° B- 28.02°	M- 9.35° B- 24.06°	M- 8.06° B- 21.08°	M- 7.10° B- 18.75°	M- 6.34° B- 16.88°
75°	M- 14.51° B- 43.08°	M- 10.65° B- 34.59°	M- 8.50° B- 28.88°	M- 7.10° B- 24.78°	M- 6.12° B- 21.69°	M- 5.38° B- 19.29°	M- 4.81° B- 17.37°
80°	M- 9.85° B- 44.14°	M- 7.19° B- 35.37°	M- 5.73° B- 29.50°	M- 4.78° B- 25.30°	M- 4.11° B- 22.14°	M- 3.62° B- 19.68°	M- 3.23° B- 17.72°
85°	M- 4.98° B- 44.78°	M- 3.62° B- 35.84°	M- 2.88° B- 29.87°	M- 2.40° B- 25.61°	M- 2.07° B- 22.41°	M- 1.82° B- 19.92°	M- 1.62° B- 17.93°
90°	M- 0.00° B- 45.00°	M- 0.00° B- 36.00°	M- 0.00° B- 30.00°	M- 0.00° B- 25.71°	M- 0.00° B- 22.50°	M- 0.00° B- 20.00°	M- 0.00° B- 18.00°

Each B (Bevel) and M (Miter) Setting is Given to the Closest 0.005°.

COMPOUND-ANGLE SETTINGS FOR POPULAR STRUCTURES

Cutting grooves (Fig. 31a-31b)

Using a wood chisel and the depth adjustment knob, it is possible to make a cutting grooves. Always make a practice cut on scrap wood. A groove should be cut as a slide cut.

- Unlock the slide lock knob.
- Turn the depth stop counter-clockwise to position B, Pull down on the saw head to check the current setting. Turn the depth adjustment knob until the desired depth of cut is attained. (See Fig. 18)
- A wooden spacer must be placed between the workpiece and the fence to create a distance of 2 1/2" (63.5 mm) between the workpiece and the fence for a consistent depth of cut in the workpiece. Use the workpiece clamp to clamp the spacer and another suitable clamp to clamp the workpiece. Make the slide cut at the desired depth.
- Turn the saw off, pull the saw arm forward.
- Turn the precision blade guide systems ON/OFF switch on to project the blade shadow onto the workpiece.
- Grasp the workpiece firmly with one hand and secure it against the fence.
- Before turning on the saw, perform a dry run of the cutting operation to make sure that no problems will occur when the cut is made.
- Grasp the saw handle firmly. Turn the switch on and allow several seconds for the blade to reach maximum speed.
- Push the blade down on top of the workpiece then back toward the rear of the saw to make a cut.
- Cut two outside grooves in the workpiece.
- Release the switch trigger and allow the saw blade to stop rotating before raising the blade out of workpiece and removing the workpiece from the miter table.
- Using a wood chisel, remove the material between the two outside grooves.
- When finished, turn the depth stop clockwise to position A for normal through cutting. (See Fig. 18)

WARNING: *Do not use a dado blade, use only the standard 10" (254 mm) diameter saw blade for this operation.*

Fig. 31a

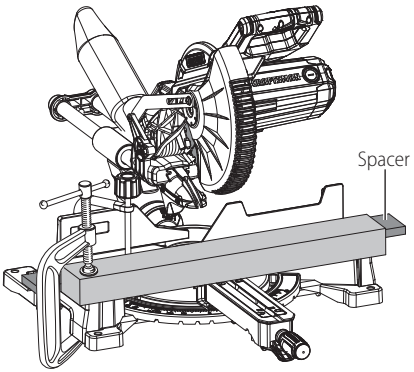

Fig. 31b

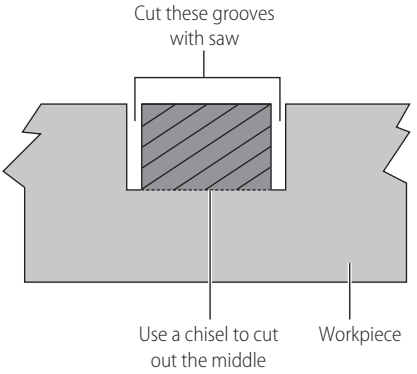

Repetitive cut (Fig. 32)

- The cut stop ❶ is designed for using during repetitive cutting. Rotate the cut stop ❶ to vertical position when make repetitive cutting.

NOTICE: *Only use one cut stop at a time.*

Fig. 32

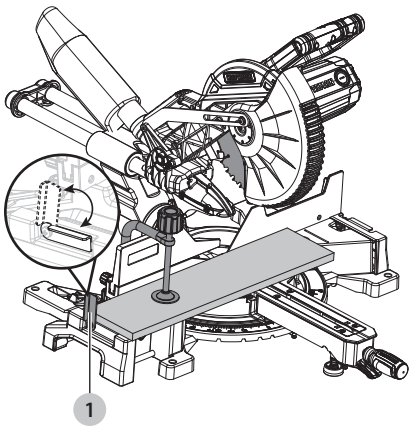

Clamping wide workpieces (Fig. 33)

When cutting wide workpieces, such as nominal 1 1/2" x 12" (38.1 x 304.8 mm), boards should be clamped securely as shown Fig. 33.

WARNING: *Never make a cut by pulling the saw toward you as the blade can climb on top of the workpiece and come toward you. Failure to heed this warning could result in serious personal injury.*

Fig. 33

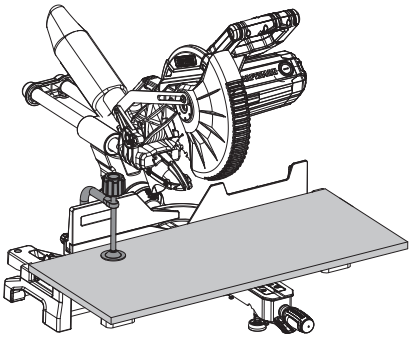

Cutting warped material (Fig. 34a-34b)

When cutting warped material, be certain that the material to be cut is positioned on the table with the convex side against the fence, as shown Fig. 34a.
If the warped material is positioned the wrong way as shown in Fig. 34b, it will pinch the blade near the end of the cut.

WARNING: *To avoid a kickback and to avoid serious personal injury, never position the concave edge of bowed or warped material against the fence.*

Fig. 34a

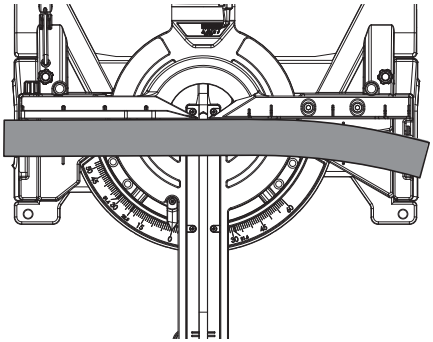

Correct

Fig. 34b

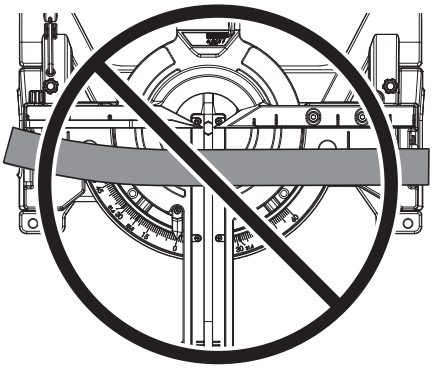

Incorrect

Cutting crown molding

The compound miter saw does an excellent job of cutting crown molding. In general, compound miter saws do a better job of cutting crown molding than any other tool.
In order to fit properly, crown molding must be compound mitered with extreme accuracy.
The two contact surfaces on a piece of crown molding that fit flat against the ceiling and the wall of a room are at angles that, when added together, equal exactly 90°. Most crown molding has a top rear angle (the section that fits flat against the ceiling) of 52° and a bottom rear angle (the section that fits flat against the wall) of 38°.

Laying molding flat on the miter table (Fig. 35)

To use this method for accurately cutting crown molding for a 90° inside or outside corner, lay the molding with its broad back surface flat on the miter table and against the fence.
When setting the bevel and miter angles for compound miters, remember that the settings are interdependent; changing one angle changes the other angle as well.
Keep in mind that the angles for crown molding are very precise and difficult to set. Since it is very easy for these angles to shift, all settings should first be tested on scrap molding. Also most walls do not have angles of exactly 90°; therefore, you will need to fine tune your settings.
When cutting crown molding by this method, the bevel angle should be set at 33.85°. The miter angle should be set at 31.6° either right or left, depending on the desired cut for the application. See the chart below for correct angle settings and correct positioning of crown molding on miter table.
The settings in the chart below can be used for cutting All Standard (U.S.) crown molding with 52° and 38° angles. The crown molding is placed flat on the miter table using the compound features of your miter saw.

Bevel Angle Setting	Type of Cut
33.85°	Left side, inside corner 1. Top edge of molding against fence 2. Miter table set right 31.62° 3. Save left end of cut
33.85°	Right side, inside corner 1. Bottom edge of molding against fence 2. Miter table set left 31.62° 3. Save left end of cut
33.85°	Left side, outside corner 1. Bottom edge of molding against fence 2. Miter table set left 31.62° 3. Save right end of cut
33.85°	Right side, outside corner 1. Top edge of molding against fence 2. Miter table set right 31.62° 3. Save right end of cut

Bevel Angle Setting	Type of Cut
0°	Left side, inside corner 1. Top edge of molding against fence 2. Miter table set right 45° 3. Save left end of cut
0°	Right side, inside corner 1. Bottom edge of molding against fence 2. Miter table set left 45° 3. Save left end of cut
0°	Left side, outside corner 1. Bottom edge of molding against fence 2. Miter table set left 45° 3. Save right end of cut
0°	Right side, outside corner 1. Top edge of molding against fence 2. Miter table set right 45° 3. Save right end of cut

Fig. 35

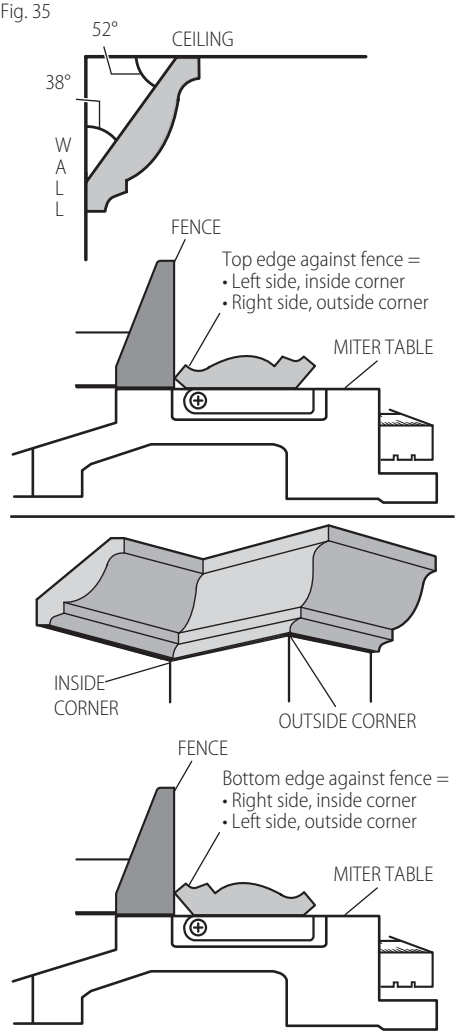

CROWN MOLDING FLAT ON MITER TABLE

Nesting crown molding against the miter fence (Fig. 36a-36b)

NOTICE: *Do not attempt to cut molding that is larger than 5-1/4 in. (133 mm) tall.*

- Set the bevel angle at 0° and the miter angle at 45° to either the left or the right. (For making 90° corners.)
- Nest and secure the crown molding 1 against fence 2 using a spring clamp 3 (not supplied) and hold crown molding securely.
- Before turning on the saw, perform a dry run of the cutting operation to make sure that no problems will occur when the cut is made.
- Grasp the saw handle firmly. Squeeze the switch trigger. Allow several seconds for the blade to reach maximum speed.
- Slowly lower the blade into and through the crown molding.

Fig. 36a

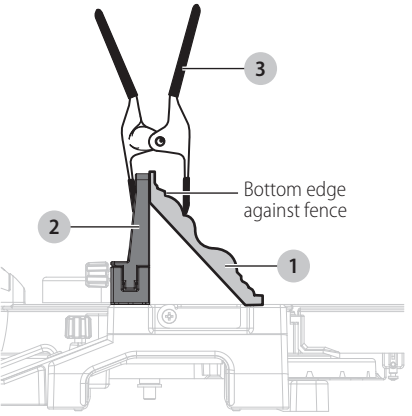

Fig. 36b

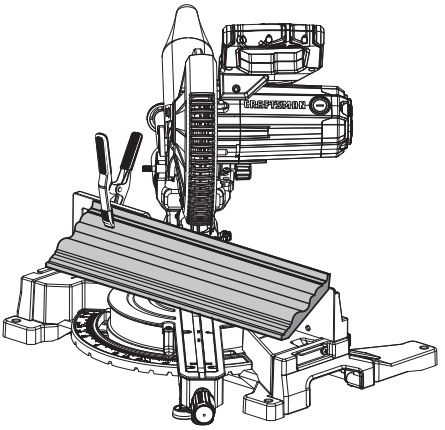

MAINTENANCE

WARNING: *Before performing any adjustment, make sure the tool is unplugged from the power supply. Failure to heed this warning could result in serious personal injury.*

WARNING: *When servicing, use only identical replacement parts. Use of any other part can create a hazard or cause product damage.*

WARNING: *To reduce the risk of serious personal injury, DO NOT touch the sharp points on the blade with fingers or hands while performing any maintenance.*

WARNING: *Always wear eye protection with side shields marked to comply with ANSI Z87.1 during product operation. If operation is dusty, also wear a dust mask.*

General maintenance

WARNING: *Do not at any time let brake fluid, gasoline, petroleum-based products, penetrating oils, etc., come in contact with plastic parts. They contain chemicals that can damage, weaken, or destroy plastic.*

- All bearings are sealed. They are lubricated for life and need no further maintenance.
- Periodically clean all dust and wood chips from around and under the base and the rotary table. Even though slots are provided to allow debris to pass through, some dust will accumulate.
- The brushes are designed to give you several years of use. If they ever need replacement, return the tool to the nearest service center for repair.

Worklight cleaning

- For the best worklight performance, perform the following maintenance regularly.
- Carefully clean sawdust and debris from worklight lens with a cotton swab.
- DO NOT use solvents of any kind, they may damage the lens.
- Dust build-up can block the worklight and prevent it from accurately indicating the line of cut.
- Follow miter saw's instruction manual to remove and install blade.
- With blade removed from saw, clean pitch and build-up from blade. Pitch and debris can interfere with the worklight and prevent it from accurately indicating the line of cut.

Dust duct cleaning

Depending on your cutting environment, saw dust can clog the dust duct and may prevent dust from flowing away from the cutting area properly. With the saw unplugged and the saw head raised fully, low pressure air or a large diameter dowel rod can be used to clear the dust out of the dust duct.

TROUBLESHOOTING

WARNING: *To avoid injury from an accidental start, turn the switch OFF and always remove the plug from the power source before making any adjustments. All electrical or mechanical repairs should be done only by qualified service technicians. Contact CRAFTSMAN Authorized Service Center. Consult CRAFTSMAN Authorized Service Center if for any reason the motor will not run.*

PROBLEM	CAUSE	SOLUTION
Saw will not start.	• Saw not plugged in. • Fuse blown or circuit breaker tripped. • Cord damaged. • Brushes worn out.	• Plug in saw. • Replace fuse or reset circuit breaker. • Have cord replaced by authorized service center. • Service brushes.
Blade does not come up to speed.	• Extension cord too light or too long. • Low house current.	• Replace with adequate size cord. • Contact your electric company.
Saw makes unsatisfactory cuts.	• Dull blade. • Blade mounted backwards. • Gum or pitch on blade. • Incorrect blade for work being done.	• Replace blade. • Turn blade around. • Remove blade and clean with coarse steel wool and turpentine or household oven cleaner. • Change the blade type.
Does not make accurate miter cuts.	• Miter angle pointer not adjusted correctly. • Blade is not square to fence. • Workpiece moving.	• Check and adjust. • Check and adjust. • Clamp workpiece securely to fence.
Material pinches blade.	• Cutting warped material.	• Refer to "Cutting warped material".

REPLACEMENT PARTS LIST

FREE WARNING LABEL REPLACEMENT: If your warning labels become illegible or are missing, call 1-888-331-4569 for a free replacement.

For replacement parts, call our customer service department at 1-888-331-4569, 8 a.m. - 8 p.m., EST, Monday - Friday.

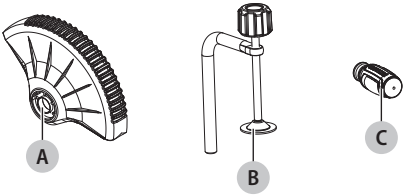

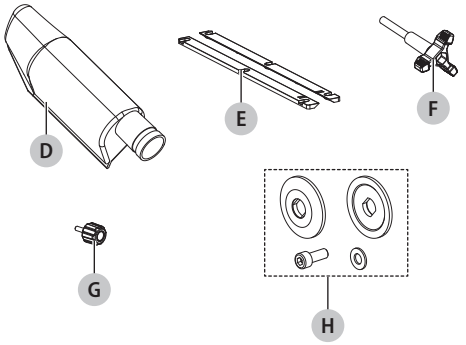

PART	DESCRIPTION	PART #
A	Lower blade guard	127092101
B	Workpiece clamp	127092102
C	Miter lock handle	127092103
D	Dust bag	127092104
E	Table insert	127092105
F	Bevel lock knob	127092106
G	Slide lock knob	127092107
H	Blade locking assembly	127092108

Register Online

Thank you for your purchase. Register your product now for:

- **WARRANTY SERVICE:** Registering your product will help you obtain more efficient warranty service in case there is a problem with your product.
- **CONFIRMATION OF OWNERSHIP:** In case of an insurance loss, such as fire, flood or theft, your registration of ownership will serve as your proof of purchase.
- **FOR YOUR SAFETY:** Registering your product will allow us to contact you in the unlikely event a safety notification is required under the Federal Consumer Safety Act. Register online at www.craftsman.com/registration

THREE-YEAR LIMITED WARRANTY

- This compound miter saw is warranted to the original purchaser from the original purchase date for three (3) years subject to the warranty coverage described herein.
- This compound miter saw is warranted to be free from defects in material and workmanship. If you believe that the compound miter saw is defective at any time during the specified warranty period, simply return the compound miter saw to the place of purchase for a free replacement or refund or call 1-888-331-4569 for warranty services.
- This warranty is void if: defects in materials or workmanship or damages result from repairs or alterations which have been made or attempted by others or the unauthorized use of nonconforming parts; the damage is due to normal wear, damage is due to abuse (including overloading of the tool beyond capacity), improper maintenance, neglect or accident; or the damage is due to the use of the tool after partial failure or use of improper accessories or unauthorized repair or alteration. This warranty gives you specific legal rights, and you may also have other rights that vary from state to state.
- For questions, warranty claims, and/or warranty replacement parts, call our customer service department at 1-888-331-4569.