SPECIFICATIONS

COS-EPGR486G Gas Range



Size	48 Inch / 6.8 cu. ft. Capacity (Total)
Fuel	Gas
Installation	Freestanding / Slide-In
Controls	Plastic Knobs with Metallic Coating
Oven	Convection
Material	Stainless Steel
Electrical	120V / 60Hz
Racks	4 Racks, 6 Positions
Oven Functions	Bake, Broil, Convection Bake, Convection Broil
Burners	• Super-Rapid / 18,000 BTU • x5 Rapid / 12,000 BTU • Griddle / 15,000 BTU • Main Bake Burner / 22,000 BTU • Secondary Bake Burner / 14,000 BTU • Broil Burner / 14,000 BTU
Included Components	4 Racks, Cast Iron Grates, Power Cord, Install Kit, Manual

COS-EPGR486G

Transform your kitchen from ordinary to refined with Cosmo's COS-EPGR486G gas range and 6.8 cu. ft. total capacity gas oven. Using 6 sealed burners, griddle, and double oven, you can cook a variety of main dishes, sauces, baked goods and more.

Features

• Designed for freestanding or slide-in

• Gas cooktop with 6 burners & 1 griddle

• Double gas ovens

• Main oven: 4.8 cu. ft. capacity with standard convection

• Second oven: 2.2 cu. ft. capacity with standard bake

• 4 main oven functions: bake , broil, convection bake, convection broil

Storage Drawer

Knob LED Lights

Triple Layer Glass

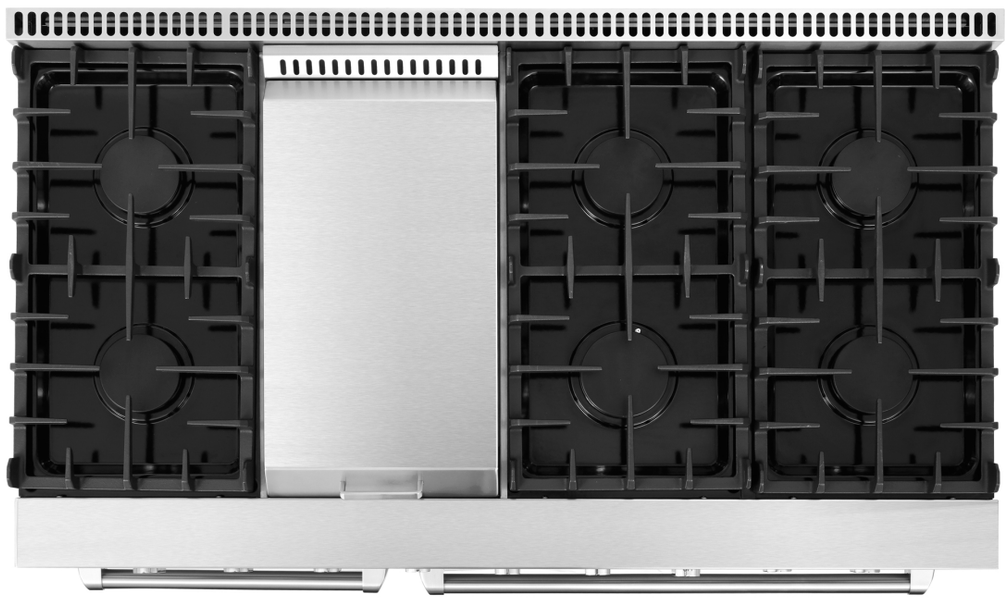

See Page 2 for dimensions

DIMENSIONS

COS-EPGR486G Gas Range

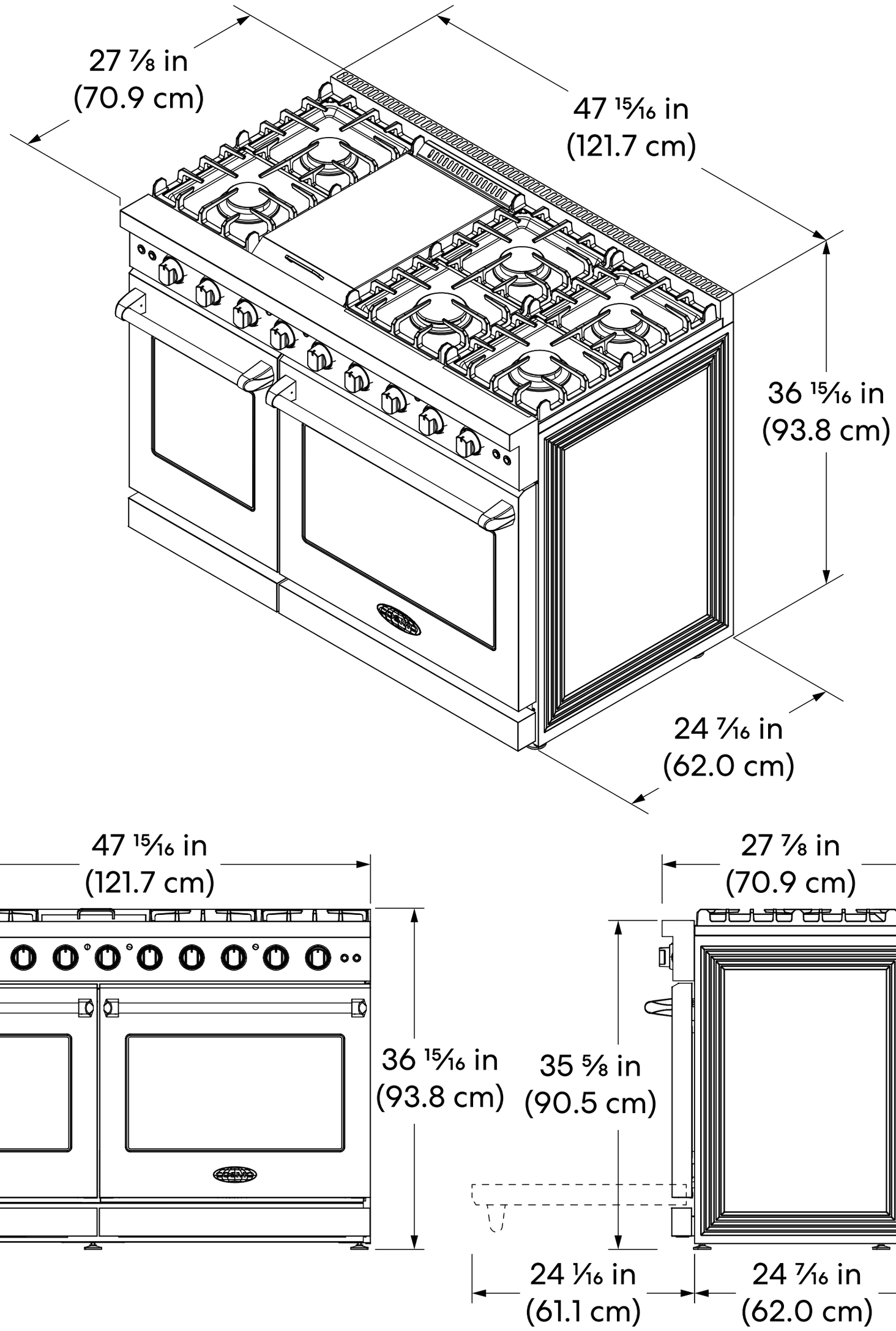

Dimensions (WxDxH): 47.9” x 27.9” x 36.9”