CHEFMAN

TurboFry®
8-Quart
Digital Air Fryer



RJ38-8T-SERIES

Get to Know Your Air Fryer

1. Control panel
2. Basket rack
3. Basket
4. Basket handle

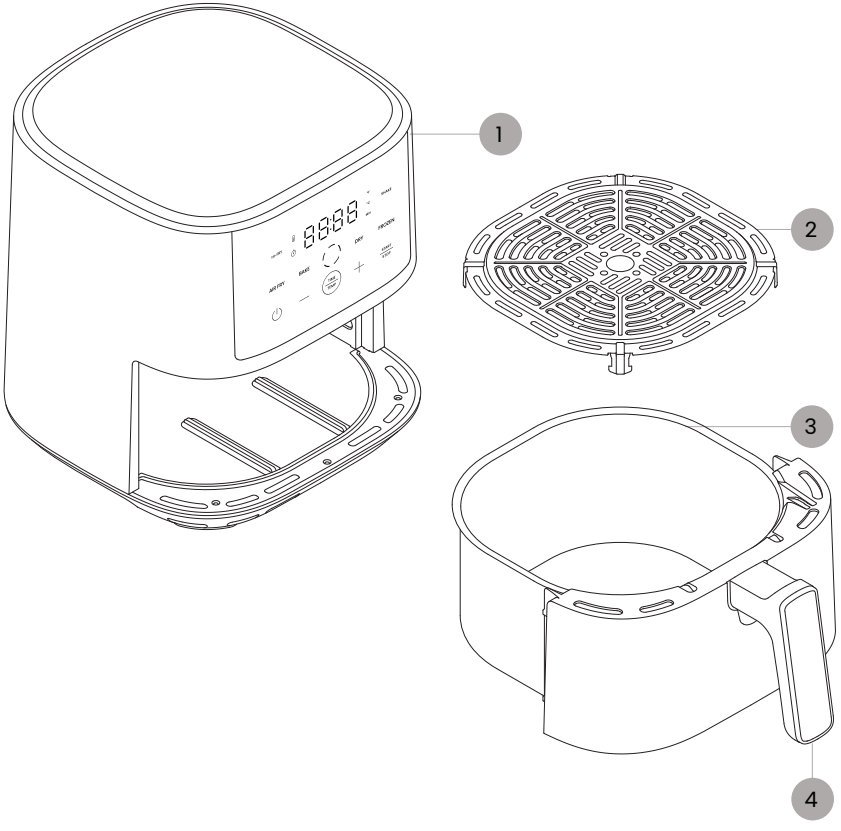

Control Panel

1. HI-FRY button
2. Temperature/time display
3. Dash display
4. SHAKE indicator
5. Cook function buttons
6. START | STOP button
7. Plus sign button
8. TIME | TEMP button
   (press and hold to switch between °F and °C)
9. Minus sign button
10. Power button

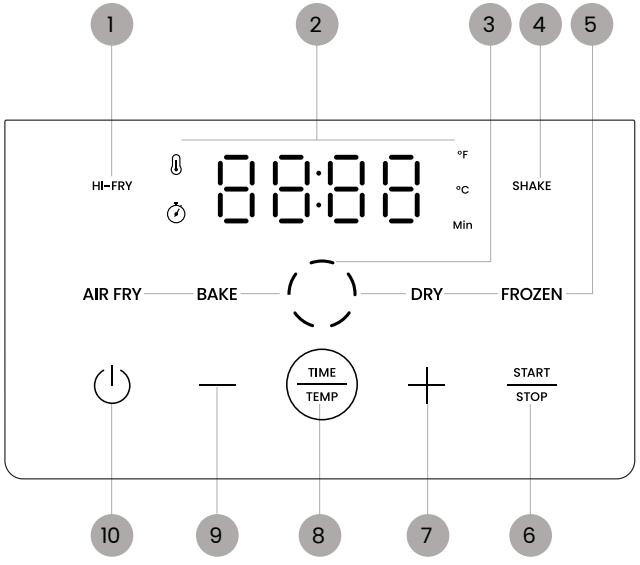

READ ALL INSTRUCTIONS BEFORE USE

For your safety and continued enjoyment of this product, always read the instruction manual before using.

SAFETY INSTRUCTIONS & IMPORTANT SAFEGUARDS

When using electrical appliances, basic safety precautions should always be followed, including the following:

1. Read all instructions.
2. **Do NOT** touch hot surfaces. Use handles or knobs.
3. To protect against electric shock, do not immerse cord, plugs, or unit body in water or other liquids.
4. Close supervision is necessary when any appliance is used by or near children.
5. Unplug from outlet when not in use and before cleaning. Allow to cool before putting on or taking off parts, and before cleaning the appliance.
6. **Do NOT** operate any appliance with a damaged cord or plug or after the appliance malfunctions, or has been damaged in any manner. Contact Chefman Customer Support for examination, repair, or adjustment.
7. The use of accessory attachments not recommended by Chefman may cause injuries.
8. **Do NOT** use outdoors.
9. **Do NOT** let cord hang over edge of table or counter, or touch hot surfaces.
10. **Do NOT** place on or near a hot gas or electric burner, or in a heated oven.
11. Extreme caution must be used when moving an appliance containing hot oil or other hot liquids.
12. To disconnect, turn any control to off, then remove plug from wall outlet.
13. **Do NOT** use the appliance for anything other than its intended use.
14. Place the unit on a flat, sturdy, heat-resistant surface. **Do NOT** place the unit near or on any type of heat source, such as a gas or electric burner, stove, or oven, even if not on. **Do NOT** use near an open flame or flammable materials.
15. The unit will emit some heat. Allow sufficient space around the unit when in use, and **do NOT** place near other items or appliances.
16. Check that your home power supply corresponds with the intended voltage of the air fryer.

SAFETY INSTRUCTIONS & IMPORTANT SAFEGUARDS

17. Never wrap the cord tightly around the appliance during use or storage; this may cause the wire to fray and break.
18. This product is not a deep fryer. It is **NOT** meant to be filled with oil. Never fill any parts of the air fryer with oil. If you choose to use oil, toss food with oil in a separate bowl and then transfer food to the removable rack or basket.
19. **Do NOT** leave uncooked ingredients in the air fryer for more than a short period of time before cooking; raw meat, poultry, fish, fruits, and vegetables can spoil.
20. **Do NOT** move the air fryer while it is full of food.
21. **Do NOT** move the unit during use. During initial use, you may notice some smoke and/or a slight odor. This is normal and should quickly dissipate. It should not happen after the appliance has been used a few more times.
22. **Do NOT** leave the air fryer unattended during use.
23. Some areas do get **HOT** during use, and the touch screen may get warm. **Do NOT** touch the heating elements. **Do NOT** place hands or other body parts near the air vents while the air fryer is in use; burns may result. Take caution when handling the hot air fryer rack and all removable parts.
24. Use protective mitts and/or tongs to remove hot food from the air fryer.

SAVE THESE INSTRUCTIONS FOR HOUSEHOLD USE ONLY

SAFETY INSTRUCTIONS & IMPORTANT SAFEGUARDS

WARNING: This appliance has a polarized plug (one blade is wider than the other). This plug is intended to fit into a polarized outlet only one way. If the plug does not fit fully into the outlet, reverse the plug. If it still does not fit, contact a qualified electrician. Do not attempt to modify the plug in any way or force it into the outlet. This could result in injury or electric shock.

Short Cord Instructions

A short power-supply cord is provided to reduce the hazards of entanglement or tripping over a longer cord. Longer detachable power-supply cords or extension cords are available and may be used if care is exercised in their use. If a longer detachable power-supply extension cord is used:

1. The marked electrical rating of the extension cord should be at least as great as the electrical rating of the appliance.
2. The longer cord should be arranged so that it will not drape over the countertop or tabletop where it can be pulled on by children or tripped over.



California Proposition 65:
(Applicable for California Residents only)
WARNING: Cancer and Reproductive Harm
www.P65Warnings.ca.gov

Do not place the appliance on a stovetop or any other heatable surface, even if stovetop is not on.
Doing so is a fire hazard.



SAFETY INSTRUCTIONS & IMPORTANT SAFEGUARDS

Power Cord Safety Tips

1. Never pull or yank on the cord or the appliance.
2. To insert the plug, grasp it firmly and guide it into the outlet.
3. To disconnect the appliance, grasp the plug and remove it from the outlet.
4. Never use the product if the power cord shows signs of abrasion or excessive wear. Contact Chefman Customer Support for additional guidance and support.
5. Never wrap the cord tightly around the appliance, as this could place undue stress on the cord where it enters the appliance and cause it to fray and break.

DO NOT OPERATE THE APPLIANCE IF THE POWER CORD SHOWS ANY DAMAGE OR IF THE APPLIANCE WORKS INTERMITTENTLY OR STOPS WORKING ENTIRELY.

Before First Use



1. Remove all packaging materials, such as plastic bags and foam inserts. Check to ensure that all parts and accessories are accounted for.
2. Read and remove any stickers on the unit except for the rating label, which should remain on the unit.
3. Wipe down the interior and exterior with a damp cloth.
4. Wash the basket and rack with warm, soapy water. Dry thoroughly.

Quick Start:
How to Cook in the Air Fryer

The air fryer's high-speed fan cooks your favorite foods quickly for perfect results each time. The rack in the basket allows air to circulate around foods for even cooking and crisping and lets excess fat drip down and away from foods for healthier eating.

CAUTION: Never fill the basket with oil. Unlike deep fryers, air fryers require little to no oil to produce a crisp texture. If you choose to use oil, toss foods with just a little in a separate bowl before cooking in the air fryer.

1. Place the air fryer on a hard, flat surface with at least 6 inches of clearance on top and in back for proper air flow, then plug in the air fryer.

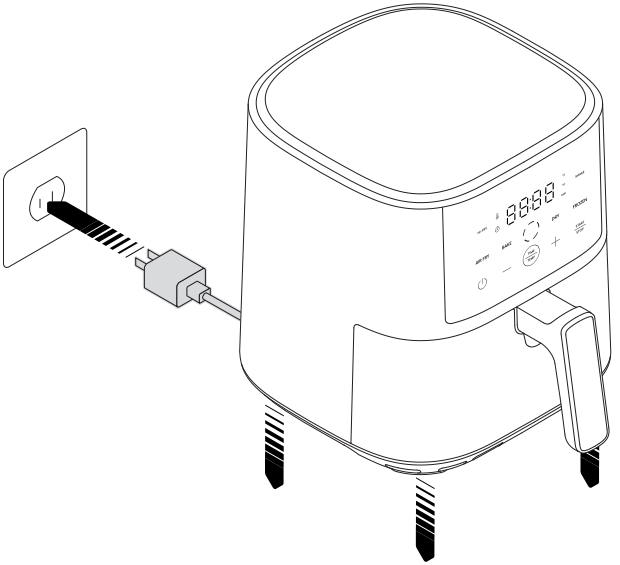

2. Lower the rack into the basket, making sure the feet are pointing down. There should be a small amount of space between the rack and the bottom of the basket. Press down on the rack to ensure it is secure and level. **CAUTION:** Never use aerosol cooking spray on the air fryer's nonstick parts, as it can cause the coating to chip.

3. Place the food on the rack and slide the basket into the air fryer. (For the DRY function, place food below the rack to keep it stable.) To allow for good air circulation, do not fill the basket past the **MAX** line. **NOTE:** If using the BAKE function, wait until the unit has preheated before putting the food in the basket.

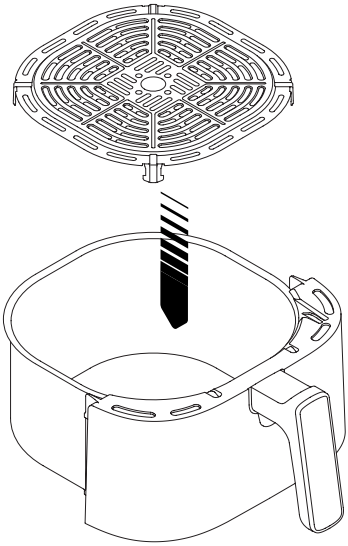

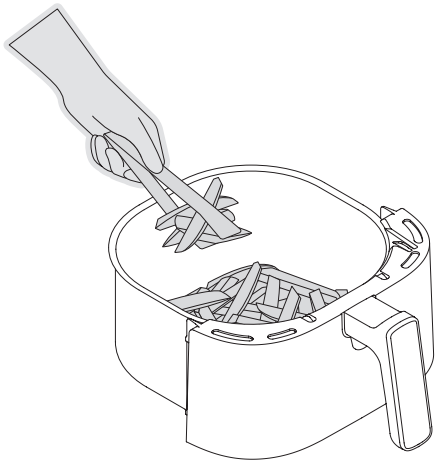

4. Select a function (see p. 12). Set the temperature by pressing the **TIME | TEMP** button until the temperature displays, then press the plus or minus sign. Then set the time: press the **TIME | TEMP** button until the time displays, then press the plus or minus sign. Press **START** to begin cooking.

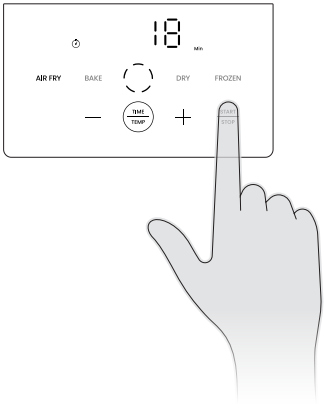

5. During cooking, the **Shake** reminder light on the control panel may turn on depending on the selected function. Remove the basket and shake (or flip) food, then return the basket to the unit to continue cooking. If your food does not need to be shaken, simply ignore the warning and it will turn off after about 60 seconds. **NOTE:** You can remove the basket at any time during cooking to check on foods. When you return the basket to the unit, cooking will resume where it left off.

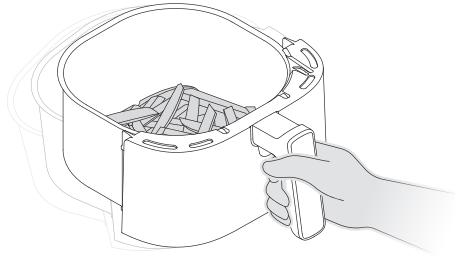

6. When the timer is done, the air fryer will beep and cooking will stop. Remove the basket, check food for doneness, and serve.

Special Function: HI-FRY The HI-FRY button becomes available in the last 2 minutes of cook cycles 5 minutes or longer. You can press it to raise the temperature to 450˚F for 2 minutes for a little extra browning and an extra-crispy finish. (You can also press it right after the cook cycle ends). The HI-FRY button is not available for the DRY (dehydrate) function.

Cook Functions at a Glance

The four cook functions make your air fryer much more versatile, allowing you to bake cookies or muffins, cook steaks or chicken breasts directly from frozen, or dehydrate your own fruits and vegetables. Here's how the four functions differ:

Function	Default Time	Temperature Range	Use it For...	Notes
AIR FRY	15 min	300-400°F	Items you'd roast in the oven: fresh vegetables for a crisp browned finish; fresh meat and poultry; chicken wings; frozen prepared foods such as french fries and chicken tenders.	Shake alert halfway through cook time.
BAKE	30 min	200-350°F	Cupcakes, cookies, rolls...anything you'd bake in a toaster oven.	No shake alert. Unit displays "PRE" for first 5 minutes of cook time as unit preheats.
DRY (dehydrate)	6 hr	90-200°F	Making homemade beef jerky; dehydrating fresh fruits, vegetables, and herbs.	No shake alert, no Hi Fry available. For best results, place food under the rack to prevent fan from blowing it out of place.
FROZEN	30 min	300-400°F	Cooking frozen raw proteins, such as chicken breasts, burgers, or steaks, without the need to thaw.	Shake alert halfway through cook time. Starts at 200°F for first 5 minutes of the cook cycle before increasing to selected temperature.

Cooking Tips

Let the unit preheat when baking. While most functions don't need to preheat, The BAKE function includes a built-in 5-minute preheat; only after the unit reaches the desired temperature will the timer begin counting down. For best results, wait until the unit is fully heated before adding food. **CAUTION:** Be careful when adding food after preheating, as the inside of the air fryer will be hot.

Use the FROZEN function to thaw and cook. The FROZEN function includes an initial 5-minute cook at 200°F to jump-start the thawing of the food. It then heats up further to the selected temperature. This 5-minute cycle is not a preheat: food should be added before starting the unit, and it is part of the total cook time.

For a crisp exterior, oil foods lightly. When air frying, some foods, especially if fresh, benefit from being tossed with a little oil in a separate bowl first. However, high-fat foods, like a well-marbled steak, or prepared foods usually require no additional oil.

Avoid wet batters. Loose batters, such as tempura or beer batter, should not be used in the air fryer, as the batter does not set quickly and will drip off the food. Instead, stick to thick, pasty batters or breaded foods like chicken nuggets.

Stabilize food for dehydrating. When using the DRY (dehydrate) function, place food under the rack instead of on top of it. This will prevent the fan from blowing food out of place, particularly lightweight items like herbs.

Don't overcrowd the basket. Too much food, especially if tightly packed, can inhibit browning and crisping. A better bet is to fry food in batches.

Shake the basket during cooking for even air frying. A good shake is especially beneficial for smaller foods like french fries, onion rings, and chicken wings. For larger or more fragile foods, consider gently tossing or flipping for even results. A flip is also recommended when cooking on the frozen function.

Check on foods early. Check foods on the earlier side of the cooking time to avoid overcooking. You can always slide the basket back in to continue cooking.

Follow food-safety guidelines for doneness. Because air fryer temperatures and food sizes can vary, do not rely exclusively on recipe timing when cooking food. Check foods for doneness against current safety guidelines before serving.

Keep It Clean

With its nonstick coating and dishwasher-safe parts, the air fryer is super easy to clean.

1. Unplug the air fryer and let it cool completely before cleaning.
2. To remove the cooled rack from the basket, pull the rack straight up and out, using the center hole for easier handling. CAUTION: Do NOT lift the rack out of the basket when hot.
3. Wash the basket and rack with warm, soapy water, then rinse and dry well. The basket and rack are also top-rack dishwasher safe.
4. Wipe down the interior and exterior with a damp cloth. Do NOT put the unit in the dishwasher or submerge in water or any other liquid. Do NOT use abrasive cleansers, or you could damage the finishes.
5. Dry the unit and all accessories completely before storing.

Having Trouble?

Problem	Likely Cause	Solution
Food isn't golden brown and crisp.	Food wasn't tossed in oil.	While you can air fry with no added oil, coating foods very lightly with oil (usually just ½ teaspoon per batch) helps guarantee crisp results. Preheating the air fryer also helps.
Food cooked unevenly.	Food was overcrowded in the basket; food was not shaken or flipped during cooking.	Fill the air fryer basket loosely with food to let air circulate. Shake, toss, or flip foods at least once during cooking for more even results.
Smoke is coming from the unit.	There is too much fat in the oven.	Avoid cooking very fatty foods, such as sausages, in the air fryer, and be sure the basket, rack, and interior of the unit are clean before cooking. Otherwise, contact Chefman® Customer Support for assistance.
An error code displayed on the control panel.	If E3 displays, it means the air fryer has shut off due to overheat protection. If E1 or E2 displays, it means there is a malfunction that can't be fixed.	E3: Allow the air fryer to cool fully and it will operate normally. E1 or E2: Please contact Chefman® Customer Support.

Terms & Conditions

Limited Warranty
RJ Brands, LLC d/b/a Chefman® offers a limited 1-year Warranty (the "Warranty") available on sales through authorized distributors and retailers only. Please note that this Warranty becomes valid from the date of initial retail purchase and that the Warranty is nontransferable and applies only to the original purchaser.

This Warranty is void without proof of purchase within the United States and Canada. Please be aware that this Warranty supersedes all other warranties and constitutes the entire agreement between the consumer and Chefman®. Any changes to the Terms and Conditions of this Warranty must be in writing, signed by a representative of Chefman®. No other party has the right or ability to alter or change the Terms and Conditions of this Warranty.

We may ask you to please submit, via email, photos and/or video of the issue you are experiencing. This is to help us better assess the matter and possibly offer a quick fix. Photos and/or video may also be required to determine Warranty eligibility.

We encourage you to register your product. Registering can make the Warranty process easier and can keep you informed of any updates or recalls on your product. To register, follow the directions on the Chefman® Warranty Registration page in the Chefman® User Guide. Please retain your proof of purchase even after registering. In the event that you do not have proof of your purchase date, we may declare your Warranty void or we may, at our sole discretion, apply the date of manufacture as the purchase date for purposes of this Warranty.

What the Warranty Covers

- **Manufacturer Defects**
  Chefman® products are warranted against defects in material and workmanship, under normal household use, for a period of 1 year from the date of purchase when used in accordance with the directions listed in the Chefman® User Guide. If your product does not work as it should, please contact Customer Support at support@chefman.com so that we may assist you.

This Warranty Does Not Cover

- **Misuse**
  Damage that occurs from neglectful or improper use of products, including, but not limited to, damage that occurs as a result of usage with incompatible voltage, regardless of whether the product was used with a converter or adapter. See Safety Instructions in the Chefman® User Guide for information on proper use of product;

- **Poor Maintenance**
  General lack of proper care. We encourage you to take care of your Chefman® products so that you may continue to enjoy them. Please see cleaning and maintenance directions in the Chefman® User Guide for information on proper maintenance;

- **Commercial Use**
  Damage that occurs from commercial use;

- **Normal Wear and Tear**
  Damage or degradation expected to occur due to normal use over time;

- **Altered Products**
  Damage that occurs from alterations or modifications by any entity other than Chefman® such as the removal of the rating label affixed to the product;

- **Catastrophic Events**
  Damage that occurs from fire, floods, or natural disasters; or

- **Loss of Interest**
  Claims of loss of interest or enjoyment.

For product information, please visit us at Chefman.com.

EXCEPT WHERE SUCH LIABILITY IS REQUIRED BY LAW, THIS WARRANTY DOES NOT COVER, AND CHEFMAN® SHALL NOT BE LIABLE FOR, INCIDENTAL, INDIRECT, SPECIAL, OR CONSEQUENTIAL DAMAGES, INCLUDING WITHOUT LIMITATION, DAMAGE TO, OR LOSS OF USE OF THE PRODUCT, OR LOST SALES OR PROFITS OR DELAY OR FAILURE TO PERFORM THIS WARRANTY OBLIGATION. THE REMEDIES PROVIDED HEREIN ARE THE EXCLUSIVE REMEDIES UNDER THIS WARRANTY, WHETHER BASED ON CONTRACT, TORT OR OTHERWISE.

Warranty Registration

What do I need to register my product?

- Contact Information
- Model Number (see example below)
- Proof of Purchase (online confirmation, receipt, gift receipt)
- Date Code (see example below)
- Access Code (see example below)

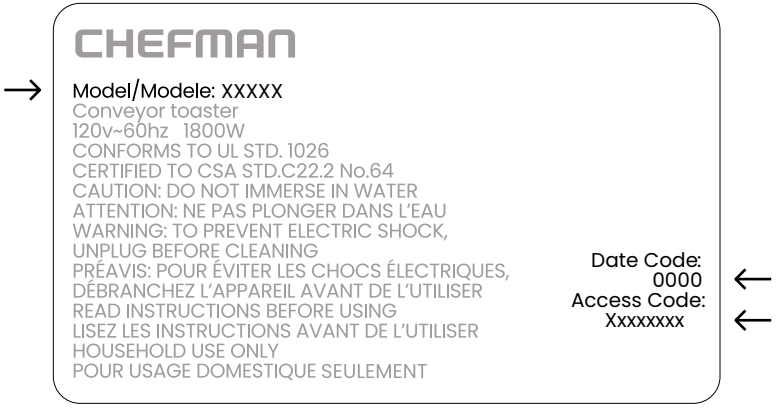

NOTE: Label depicted here is an example.
Please see label on your product for actual model/date code/access code.

How do I register my product?

All you need to do is fill out a simple Chefman® registration form.
You can easily access the form in one of the two ways listed below:

- Visit Chefman.com/register.
- Scan the QR code to the right to access site.

CHEFMAN

TurboFry®
8-Quart
Digital Air Fryer

RJ38BTSERIESUG091825

Chefman® is a registered trademark of RJ Brands, LLC.
TurboFry® is a registered trademark of RJ Brands, LLC.