CHEFMAN

ExacTemp® 12-Quart Digital Air Fryer+

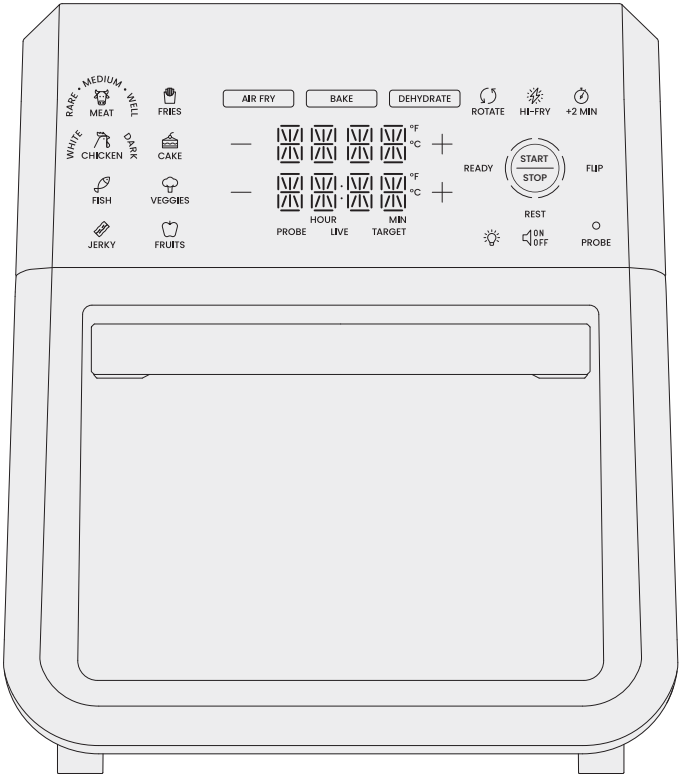



RJ38-RDO-PV12

Get to Know Your Air Fryer

1. Capacitive Touch Control Panel
2. Wire Cooking Racks (3)
3. Drip Tray | Baking Pan
4. Probe Thermometer
5. Probe Winding Wheel
6. Spit Forks and Screws (2 of each)
7. Rotisserie Spit
8. Fetch Tool
9. Door with Viewing Window
10. Cool-Touch Handle
11. Rack Holders
12. Integrated Probe Storage (on side)
13. Integrated Power Cord Storage (on back)

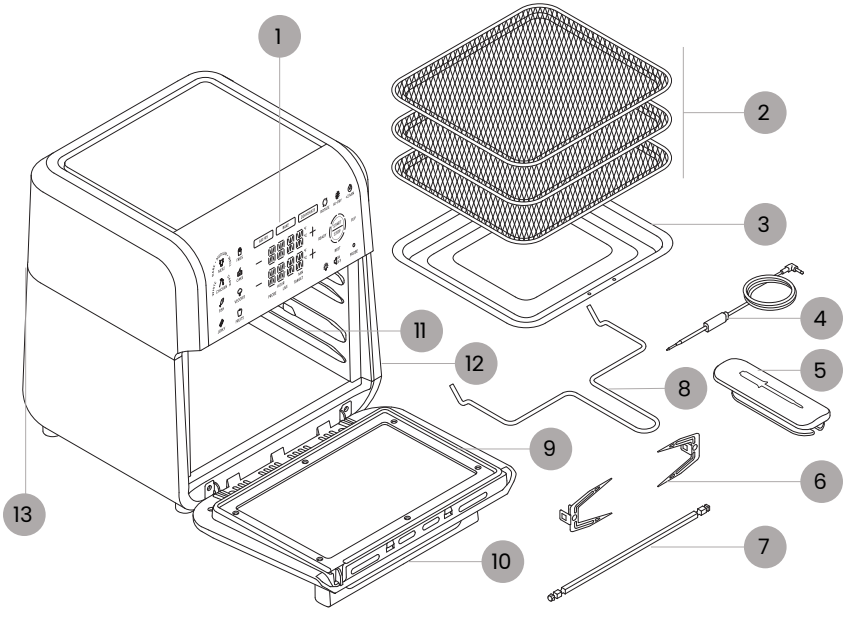

Control Panel

A. Probe Cooking Presets
B. Timed Cooking Presets
C. Cook Function Buttons
D. Oven + | – Buttons (top)
E. Time and Probe + | – Buttons (bottom)
F. Temp | Time Display
G. ROTATE Button
H. HI-FRY Button
I. +2 MIN Button
J. START | STOP Button
K. Circular Progress Bars
L. FLIP Light
M. REST Light
N. Probe Attachment Port
O. PROBE Light
P. Sound Button
Q. Oven Light Button
R. READY Light

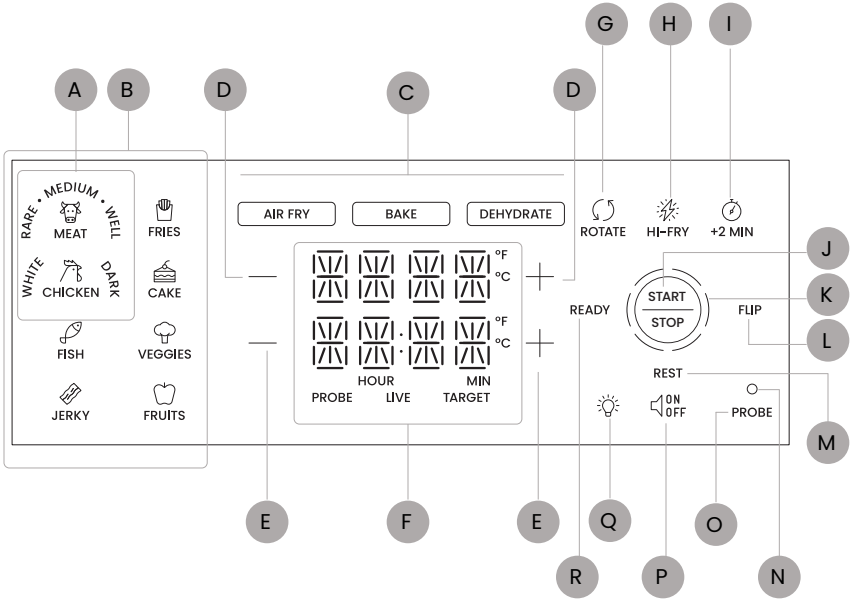

READ ALL INSTRUCTIONS BEFORE USE

For your safety and continued enjoyment of this product, always read the instruction manual before using.

SAFETY INSTRUCTIONS & IMPORTANT SAFEGUARDS

WARNING: When using electrical appliances, basic safety precautions should always be followed, including:

1. Read all instructions.
2. Do not touch hot surfaces. Use handles or knobs.
3. To protect against electrical shock, do not immerse cord or plug in water or other liquid.
4. Close supervision is necessary when any appliance is used by or near children.
5. Unplug from outlet when not in use and before cleaning. Allow to cool before putting on or taking off parts.
6. Do not operate any appliance with a damaged cord or plug or after the appliance malfunctions or has been damaged in any manner. If this should occur, contact Chefman Customer Support for examination, repair, or adjustment.
7. The use of accessory attachments not recommended by Chefman may cause injuries.
8. Do not use outdoors.
9. Do not let cord hang over edge of table or counter, or touch hot surfaces.
10. Do not place on or near a hot gas or electric burner, or in a heated oven.
11. Extreme caution must be used when moving an appliance containing hot oil or other hot liquids.
12. Always attach plug to appliance first, then plug cord into the wall outlet.
13. To disconnect, turn any control to off, then remove plug from wall outlet.
14. Do not use appliance for other than intended use.
15. When using this appliance, provide adequate ventilation above and on all sides for air circulation. Do not allow this appliance to touch curtains, wall coverings, clothing, dish towels or other flammable materials during use. Do not cover air fryer and ensure air vents, located on the back of the fryer, are not covered.

SAFETY INSTRUCTIONS & IMPORTANT SAFEGUARDS

16. This appliance generates heat during use. Proper precautions must be taken to prevent the risk of burns, fire, or other damage to persons or property. Keep hands clear of the immediate area surrounding the air fryer during operation and use grips and handles on the appliance when operating. Do not put hands or other body parts inside the air fryer housing while in use or hot.
17. Use caution when opening the air fryer. The inside of the unit and its contents are very hot. Use tongs or protective gloves to remove food from trays.
18. Do not move the air fryer while it is in use and/or full of food.
19. Always unplug the air fryer after use.
20. Never place the air fryer in the dishwasher. This product housing cannot be immersed in water and is not dishwasher safe.
21. The housing of the air fryer can be wiped down between uses with a nonabrasive cleaner.
22. Store air fryer in a cool, dry place.
23. Never wrap the cord tightly around the appliance during use or storage; this may cause the wire to fray and break.

SAVE THESE INSTRUCTIONS FOR HOUSEHOLD USE ONLY

SAFETY INSTRUCTIONS & IMPORTANT SAFEGUARDS

WARNING: This appliance has a polarized plug (one blade is wider than the other). To reduce the risk of electric shock, this plug is intended to fit into a polarized outlet only one way. If the plug does not fit fully into the outlet, reverse the plug. If it still does not fit, contact a qualified electrician. Do not attempt to modify the plug in any way.

Short Cord Instructions

A short power-supply cord is provided to reduce the hazards resulting from entanglement or tripping over a longer cord. Longer detachable power-supply cords or extension cords are available and may be used if care is exercised in their use. If a longer detachable power-supply extension cord is used:

1. The marked electrical rating of the extension cord should be at least as great as the electrical rating of the appliance.
2. The longer cord should be arranged so that it will not drape over the countertop or tabletop where it can be pulled on by children or tripped over.

SAFETY INSTRUCTIONS & IMPORTANT SAFEGUARDS

Power Cord Safety Tips

1. Never pull or yank on the cord or the appliance.
2. To insert the plug, grasp it firmly and guide it into the outlet.
3. To disconnect the appliance, grasp the plug and remove it from the outlet.
4. Never use the product if the power cord shows signs of abrasion or excessive wear. Contact Chefman® Customer Support for additional guidance and support.
5. Never wrap the cord tightly around the appliance, as this could place undue stress on the cord where it enters the appliance and cause it to fray and break

DO NOT OPERATE THE APPLIANCE IF THE POWER CORD SHOWS ANY DAMAGE OR IF THE APPLIANCE WORKS INTERMITTENTLY OR STOPS WORKING ENTIRELY.



California Proposition 65:
(Applicable for California Residents only)
WARNING: Cancer and Reproductive Harm
www.P65Warnings.ca.gov

Do not place the appliance on a stovetop or any other heatable surface, even if stovetop is not on. Doing so is a fire hazard.



Before First Use



1. Remove all packaging materials. Check to ensure that all parts and accessories are accounted for. (Note that the probe is located in its storage compartment under the right side of the unit.)
2. Read and remove any stickers on the air fryer except for the rating label, which should remain on the unit.
3. Wipe down the interior and exterior with a damp cloth. Wash the accessories with warm, soapy water; rinse and dry thoroughly (do not immerse the probe cord in water).
4. Place the unit on a flat, heat-resistant surface positioned at least 2 inches away from the wall or any other objects. **CAUTION:** Never place the unit on a stovetop, even if the stove is off, as that creates a fire risk.

Quick Start:
How to Cook in Time Mode

Time Cook Mode allows you to cook your food for a certain length of time using three different cook functions (**AIR FRY**, **BAKE**, and **DEHYDRATE**). The air fryer requires no preheating and cooks faster than a traditional oven, which means you can enjoy your favorite hot foods in mere minutes. **NOTE:** On first use, the unit may emit a slight odor, which is normal and will dissipate with use.

1. Place the unit on a hard, flat surface away from all sources of heat and plug it in.
2. Place the food on the rack(s), baking pan, or rotisserie spit (see p. 18). If not using the pan, position it on the floor of the unit as a drip tray for easy cleanup.

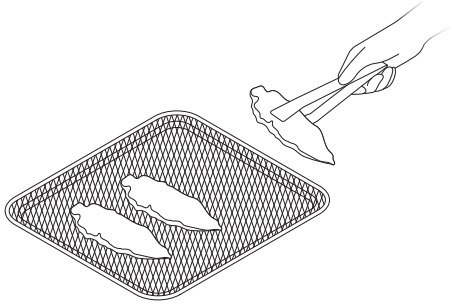

3. Slide the food into the air fryer and close the door.

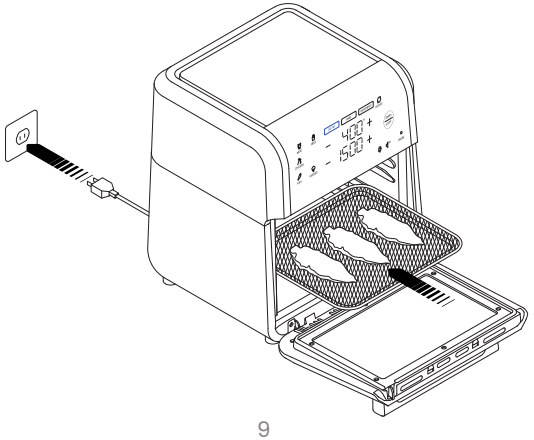

4. Press the cook function button of your choice (**AIR FRY**, **BAKE**, or **DEHYDRATE**). The button will turn blue and the available presets for that function will illuminate on the display.
5. To use the presets, press the appropriate icon for the food you're cooking. The button will turn blue, and the programmed temperature and time will appear on the display. **NOTE:** Changing the temperature or time once a preset is selected will cancel the preset.
6. If not using the presets, set the desired temperature and time by pressing the top and bottom sets of + and – buttons on the display.
7. If cooking with the rotisserie spit (see p. 18), make sure the **ROTATE** button is selected (it should be lit blue). Otherwise, make sure it is deselected (it should be lit white). The rotate function may be turned off or on at any time during cooking by pressing the button. **NOTE:** The **ROTATE** button is not available for **DEHYDRATE**.
8. Press the **START | STOP** button to begin cooking and the timer will start counting down.

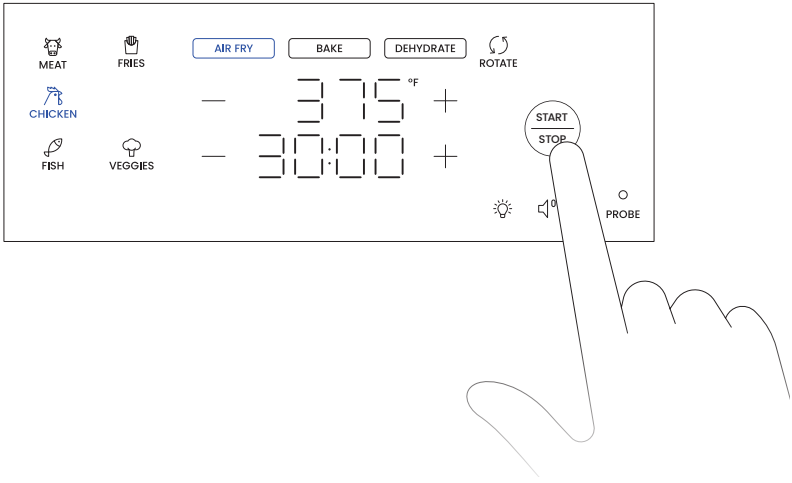

9. If you'd like to check on foods during cooking, press the oven light button on the display and look through the window on the door. You can also open the door to check; the cooking timer will pause when the door is opened and resume when the door is closed. To stop cooking before the timer ends, press **START | STOP**.

10. If using the **AIR FRY** cook function, the **FLIP** indicator light will turn on midway through the cooking cycle as a reminder to flip food. Open the oven door, carefully flip food with tongs if needed, and close the door to resume. If your food does not need to be flipped, simply ignore the alert and it will turn off after 60 seconds.
11. Cook until the timer ends. The word **READY** will appear on the display and cooking will stop.
12. Using oven mitts, carefully remove the rack(s) and pan. If using the spit, use the fetch tool in one hand and an oven mitt in the other to remove (see p. 19 for more detailed directions).

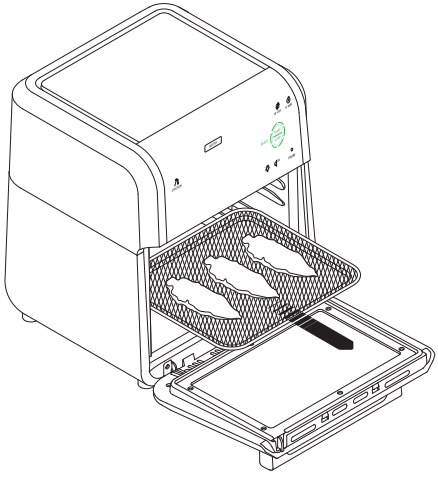

13. Check food for doneness and serve. **NOTE:** If not powered off, the unit will automatically go into Sleep Mode after 20 minutes of no activity. To wake the unit up, open the door or press **START | STOP**.

Time Mode Cooking Presets

The presets make it quick and easy to set the cooking time and temperature for the food. Keep in mind the presets reflect the average appropriate time and temperature. Always check foods for doneness according to proper food safety guidelines.

AIR FRY Presets				
Preset	**Default Time**	**Default Temp**	**Rotate Option**	**Flip?**
FRIES	18 min.	400°F (205°C)	No	Yes, halfway through
CHICKEN	30 min.	375°F (190°C)	Yes	Yes, halfway through
FISH	10 min.	350°F (175°C)	No	No
MEAT	25 min.	375°F (190°C)	Yes	Yes, halfway through
VEGGIES	15 min.	350°F (175°C)	No	Yes, halfway through

NOTE: The temperature for Air Fry ranges from 200°F (90°C) to 400°F (205°C), and the time ranges from 1 minute to 1 hour and 30 minutes.

BAKE Presets				
Preset	**Default Time**	**Default Temp**	**Rotate Option**	**Flip?**
CHICKEN	45 min.	375°F (190°C)	No	No
FISH	15 min.	350°F (175°C)	No	No
VEGGIES	25 min.	350°F (175°C)	No	No
CAKE	20 min.	325°F (160°C)	No	No

NOTE: The temperature for Bake ranges from 200°F (90°C) to 400°F (205°C), and the time ranges from 1 minute to 2 hours.

DEHYDRATE Presets*				
Preset	**Default Time**	**Default Temp**	**Rotate Option**	**Flip?**
JERKY	4 hours	165°F (75°C)	No	No
VEGGIES	6 hours	130°F (51°C)	No	No
FRUIT	8 hours	135°F (55°C)	No	No

* When dehydrating, follow a trusted recipe and follow food safety guidelines.

NOTE: The temperature for Dehydrate ranges from 95°F (35°C) to 200°F (90°C), and the time ranges from 30 minutes to 24 hours.

Quick Start: How to Cook in Probe Mode

As an alternative to cooking by time, Probe Mode allows you to cook meats, chicken, and fish to their ideal internal temperatures with the included probe, so you can be sure they've reached perfect doneness.

1. Place the unit on a hard, flat surface away from all sources of heat and plug it in.
2. Insert the probe horizontally into the thickest part of your food (see drawings below). Be sure the tip of the probe isn't touching bone. If you're cooking multiple pieces (for instance, several chicken breasts), put the probe in the largest one.

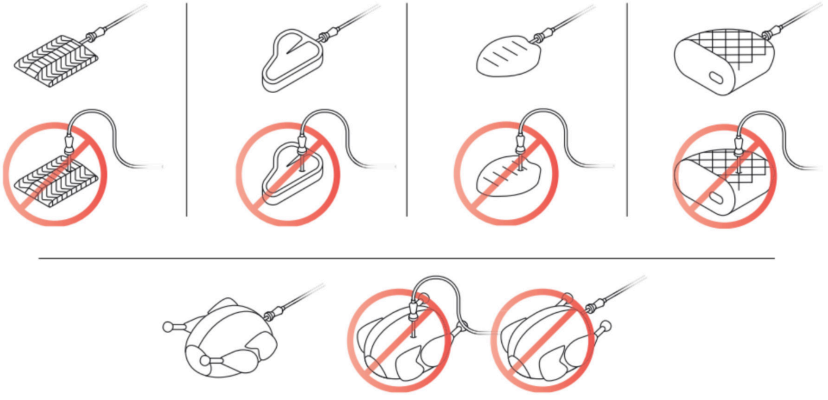

3. Place the food on the rack(s) or baking pan. If not using the pan, position it on the floor of the unit as a drip tray for easy cleanup.

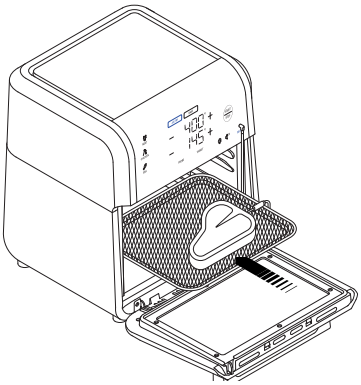

4. Slide the food into the air fryer and plug the probe into the probe attachment port. Then, close the door.
5. Press the cook function button of choice (**AIR FRY** or **BAKE**). The cook function will turn blue and the meat presets will illuminate on the display.
6. Set the oven temperature by pressing the top set of + and – buttons. Next, set the target probe temperature by pressing the bottom set of + and – buttons OR by choosing the **MEAT**, **CHICKEN**, or **FISH** preset. For meat, choose your preferred doneness (rare to well-done) by pressing the **MEAT** button repeatedly. For chicken, choose your type of meat (light or dark) by pressing the **CHICKEN** button repeatedly. **NOTE:** Changing the target temperature once a preset is selected will cancel the preset.
7. Press the **START | STOP** button to begin cooking. The probe temperature on the display will alternate between the current ("LIVE") temperature and the target internal temperature of the food. (LED segments around the **START | STOP** button will progressively illuminate during cooking to indicate how close your food is to completion.)

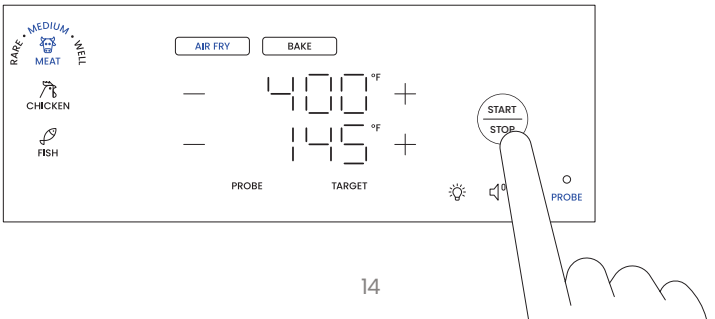

8. If using the Air Fry cook function, the **FLIP** indicator light will turn on midway through the cooking cycle as a reminder to flip food. Open the oven door, carefully flip food with tongs if needed, and close the door to resume. If your food does not need to be flipped, simply ignore the alert and it will turn off after 60 seconds.
9. When the internal temperature reaches its target (or 5°F/2°C below it when using the **MEAT** preset), cooking will stop and the **REST** light will come on. Open the oven door to let some of the heat dissipate but leave the probe in the food as it rests (the internal temperature will continue to rise). If you set the target temperature manually, or are using the **CHICKEN** or **FISH** preset, the unit will count down a 2-minute rest. If cooking meat, the **REST** light will remain on until the internal temperature reaches its target (usually in about 2 to 5 minutes).

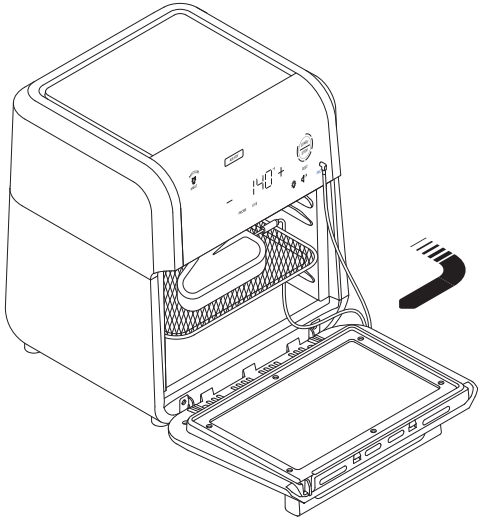

10. When resting is complete, the word **READY** will appear on the display.
11. Using oven mitts, carefully remove the rack(s) and pan. Check the food for doneness, carefully remove the probe from the food, and serve. **NOTE:** If not powered off, the unit will automatically go into Sleep Mode after 20 minutes of no activity. To wake the unit up, press **START | STOP** or open the oven door.

Probe Mode Cooking Presets

The preset buttons represent the recommended target temperatures for these proteins. When cooking meat, the unit will stop cooking when the probe temperature is 5°F (2°C) below the target internal temperature, then enter a short rest phase (see p. 15, Step 9 for more information). When cooking fish or chicken, the unit will continue to cook until the probe temperature has reached the target. **NOTE:** Only **AIR FRY** and **BAKE** are available in Probe Mode.

Preset	Target Internal Temp	Rotate Option	Flip?
CHICKEN	165°F (74°C)	No	Yes (Air Fry only)
CHICKEN – Dark Meat	175°F (80°C)	No	Yes (Air Fry only)
FISH	145°F (62°C)	No	No
MEAT – Rare	125°F (52°C)	No	Yes (Air Fry only)
MEAT – Medium-Rare	135°F (58°C)	No	Yes (Air Fry only)
MEAT – Medium	145°F (62°C)	No	Yes (Air Fry only)
MEAT – Medium-Well	155°F (68°C)	No	Yes (Air Fry only)
MEAT – Well	165°F (74°C)	No	Yes (Air Fry only)

Special Functions

ROTATE

The **ROTATE** button is automatically selected for certain presets but should be used when cooking with the rotisserie spit. When selected, it will continuously rotate food 360° for perfect, even cooking. If not using the spit, make sure the button is deselected. The **ROTATE** button is not available for **DEHYDRATE** or Probe Mode.

HI-FRY

The **HI-FRY** button becomes available (illuminates) partway through a cooking cycle. When pressed, it will temporarily raise the temperature to 450°F (235°C) for 2 minutes to give foods a little additional browning. This button is not available for **DEHYDRATE**.

+2 MIN

The **+2 MIN** button becomes available (illuminates) toward the end of cooking. Pressing it will add 2 more minutes at the current temperature, and it can be pressed repeatedly to add additional time. For Time Mode Cooking, you can press the **+2 MIN** button as the end of the cooking cycle nears, or immediately after cooking ends. For Probe Mode Cooking, you can press the **+2 MIN** button after the unit enters **READY** Mode. This button is not available for **DEHYDRATE**.

FARENHEIT/CELSIUS TOGGLE

To switch the oven display between °F and °C, press and hold either the Oven + | - button pair or the Time and Probe + | - button pair for 5 seconds.

Digital Cookbook
Scan for a downloadable cookbook, full of delicious recipes created just for your ExacTemp® Digital Air Fryer+.

How to Use the Rotisserie Spit (Max: 4 lb)

Using the spit with the rotate feature is perfect for roasting a whole chicken to even, crisp perfection and for slowly cooking whole, boneless pieces of meat, such as beef or pork tenderloins. You can also experiment with roasting a small cauliflower head or a peeled pineapple. **NOTE:** The rotate function is not available for **DEHYDRATE** or Probe Mode.

Place the baking pan on the floor of the unit.

If using the spit to cook a whole chicken, be sure the giblets are removed. Season the chicken as desired and truss tightly. (Be sure the chicken will fit in the oven with room to rotate; a 3 to 3½ lb chicken works well.) Run the spit through the bird lengthwise, starting at the cavity in the back. Carefully slide the spit forks onto each end of the shaft, sinking them deep into the breast meat at one end and the thigh meat at the other end. Lock the forks in place with screws, leaving at least 1 inch of free space on both ends of the rod. The chicken should be secure and should not be able to slide around on the spit.

Alternatively, if using the spit to cook a piece of meat, carefully push the spit lengthwise through the center of the meat. Carefully slide the spit forks onto each end of the shaft, inserting the prongs deeply into the meat. Lock the forks in place with screws, leaving at least 1 inch of free space on both ends of the rod. The meat should be secure and should not be able to slide around on the spit.

Guide the spit into the rotisserie rack position by placing the left shaft into the rotisserie gear located on the left interior wall. Once in place, lift the right shaft and lay it on the rotisserie holder located on the right interior wall. Be sure the meat or chicken can rotate freely in the air fryer.

Close the door and proceed with cooking following the directions on p. 10, beginning with Step 4 and choosing the **AIR FRY** or **BAKE** cook function. **CAUTION:** The spit will get hot during cooking. Use the fetch tool and oven mitts and handle with care to avoid injury (see p. 19 for more detailed directions on the fetch tool).

How to Use the Fetch Tool

The fetch tool is handy for removing the hot spit from the air fryer.

Hold the fetch tool by its handle with one hand. Have a potholder in (or an oven mitt on) the other hand.

Guide the fetch tool into the unit, positioning the prongs below the shafts of the rotisserie spit.

Use the tool to lift the right side of the spit from the rotisserie holder. Once it's free, lift the left side.

Carefully guide the hot spit and food from the air fryer and transfer to a heat-resistant surface.

Cooking Tips

- When air frying, oil foods lightly for a crisp exterior. Some foods, especially if fresh, benefit from being tossed with a little oil in a separate bowl before frying. However, high-fat foods, like a well-marbled steak, or prepared foods usually require no additional oil.
- Avoid wet batters. Loose batters, such as those used for deep frying, do not work in air fryers, as the batter simply slides off. Adapt such recipes to give foods a thicker coating, preferably including breadcrumbs to help the coating adhere.
- Use medium-high to high heat for air frying. Most foods air fry best between 350°F (175°C) and 400°F (205°C). For gentler cooking and reheating, use a lower temperature to avoid overcooking.
- Don't overcrowd the racks or pan. Too much food, especially if tightly packed, can inhibit browning and crisping. A better bet: cook food in batches.
- If using multiple wire racks, carefully switch rack positions halfway through the cooking cycle to ensure even cooking. For dehydrating, switch rack positions from top to bottom periodically.
- When cooking by time, check foods on the earlier side of the cooking time; you can always put the food back in to continue cooking.
- Because food sizes can vary, do not rely exclusively on recipe timing when cooking food. Check food for doneness against current safety guidelines before serving.

Having Trouble?

Why is there white smoke coming from my unit?

White smoke can be a sign that there's too much fat in the fryer. Avoid cooking very fatty foods, such as sausages, in the air fryer, and be sure that the accessories and interior of the air fryer are clean before cooking.

Why has my food cooked unevenly?

Two culprits are likely: overcrowding and not switching rack positions. Evenly distribute foods on the rack(s) and pan. Flipping foods midway through cooking also helps. If using multiple racks, try switching rack positions at least once during cooking.

Why isn't my food crisp?

Though you can air fry with no added oil, coating foods very lightly with oil (usually just teaspoon per batch for most recipes) helps guarantee crisp results. Preheating the air fryer also helps.

In Probe Cook Mode, why does the unit stop cooking before it reaches my target temperature?

All food experiences "carryover cooking" after being pulled from the heat source, where the temperature continues to rise a few more degrees. To avoid overcooking on meat, the air fryer is designed to take carryover cooking into account; when it's 5˚F (2˚C) below the target temperature, active cooking stops, and a rest phase begins, to let the food come to the final target temperature off the heat. For best results, open the air fryer door during the rest phase but leave the probe in the food until it reaches the target temperature.

When cooking with the probe, why is my meat undercooked even after the rest period?

Inserting the probe correctly is critically important for getting accurate readings. You want the tip of the probe to be at the center of the thickest part of the meat, but not touching any bone. See the drawings on p. 14 for examples of proper probe placement.

Keep It Clean

The air fryer is easy to clean and should be cleaned after each use. Follow the directions below.

1. Unplug the unit, unplug the probe (if used), and let the unit cool completely before cleaning.
2. Wipe down the exterior and interior of the unit with a clean, damp cloth and dry thoroughly. Do not let liquid get into the probe attachment port. Do not put the unit in the dishwasher or submerge it in water or any other liquid.
3. Using a sponge, soft cloth, or nylon pad, wash the glass on the door with dish soap and warm water, and dry thoroughly. Do not use a spray glass cleaner.
4. Wash all accessories with warm, soapy water; rinse, and dry well (do not immerse the probe cord in water). All accessories besides the probe are top-rack dishwasher safe.
5. When dry, insert the probe in its slot on the winding wheel, and wind the cord around the wheel to prevent kinks. Store the probe and winding wheel in the compartment on the side of the unit.
6. Do not use abrasive cleansers, which can damage the finishes.

Notes

Terms & Conditions

Limited Warranty
RJ Brands, LLC d/b/a Chefman® offers a limited 1-year Warranty (the "Warranty") available on sales through authorized distributors and retailers only. Please note that this Warranty becomes valid from the date of initial retail purchase and that the Warranty is non-transferable and applies only to the original purchaser.

This Warranty is void without proof of purchase within the United States and Canada. Please be aware that this Warranty supersedes all other warranties and constitutes the entire agreement between the consumer and Chefman®. Any changes to the Terms and Conditions of this Warranty must be in writing, signed by a representative of Chefman®. No other party has the right or ability to alter or change the Terms and Conditions of this Warranty.

We may ask you to please submit, via email, photos and/or video of the issue you are experiencing. This is to help us better assess the matter and possibly offer a quick fix. Photos and/or video may also be required to determine Warranty eligibility.

We encourage you to register your product. Registering can make the Warranty process easier and can keep you informed of any updates or recalls on your product. To register, follow the directions on the Chefman® Warranty Registration page in the Chefman® User Guide. Please retain your proof of purchase even after registering. In the event that you do not have proof of your purchase date, we may declare your Warranty void or we may, at our sole discretion, apply the date of manufacture as the purchase date for purposes of this Warranty.

What the Warranty Covers

- **Manufacturer Defects**
  Chefman® products are warranted against defects in material and workmanship, under normal household use, for a period of 1 year from the date of purchase when used in accordance with the directions listed in the Chefman® User Guide. If your product does not work as it should, please contact Customer Support at support@chefman.com so that we may assist you.

This Warranty Does Not Cover

- **Misuse**
  Damage that occurs from neglectful or improper use of products, including, but not limited to, damage that occurs as a result of usage with incompatible voltage, regardless of whether the product was used with a converter or adapter. See Safety Instructions in the Chefman® User Guide for information on proper use of product;

- **Poor Maintenance**
  General lack of proper care. We encourage you to take care of your Chefman® products so that you may continue to enjoy them. Please see Keep It Clean directions in this Chefman® User Guide for information on proper maintenance;

- **Commercial Use**
  Damage that occurs from commercial use;

- **Normal Wear and Tear**
  Damage or degradation expected to occur due to normal use over time;

- **Altered Products**
  Damage that occurs from alterations or modifications by any entity other than Chefman® such as the removal of the rating label affixed to the product;

- **Catastrophic Events**
  Damage that occurs from fire, floods, or natural disasters; or

- **Loss of Interest**
  Claims of loss of interest or enjoyment.

For product information, please visit us at Chefman.com.

EXCEPT WHERE SUCH LIABILITY IS REQUIRED BY LAW, THIS WARRANTY DOES NOT COVER, AND CHEFMAN® SHALL NOT BE LIABLE FOR, INCIDENTAL, INDIRECT, SPECIAL, OR CONSEQUENTIAL DAMAGES, INCLUDING WITHOUT LIMITATION, DAMAGE TO, OR LOSS OF USE OF THE PRODUCT, OR LOST SALES OR PROFITS OR DELAY OR FAILURE TO PERFORM THIS WARRANTY OBLIGATION. THE REMEDIES PROVIDED HEREIN ARE THE EXCLUSIVE REMEDIES UNDER THIS WARRANTY, WHETHER BASED ON CONTRACT, TORT OR OTHERWISE.

Warranty Registration

What do I need to register my product?

- Contact Information
- Model Number (see example below)
- Proof of Purchase (online confirmation, receipt, gift receipt)
- Date Code (see example below)
- Access Code (see example below)

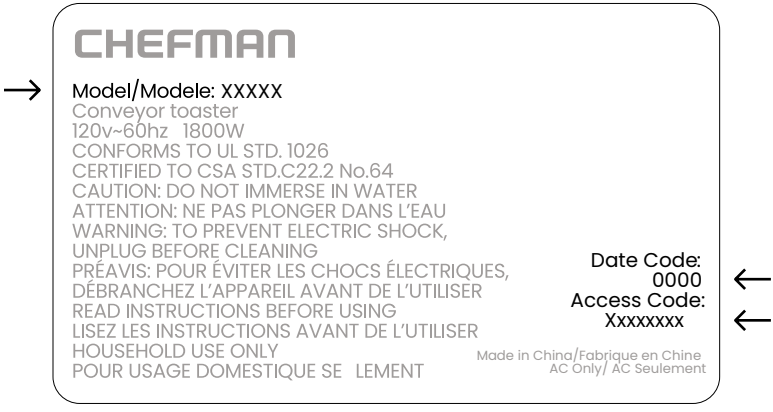

NOTE: Label depicted here is an example.
Please see label on your product for actual model/date code/access code.

How do I register my product?

All you need to do is fill out a simple Chefman® registration form.
You can easily access the form in one of the two ways listed below:

- Visit Chefman.com/register.
- Scan the QR code to the right to access site.

CHEFMAN

ExacTemp® 12-Quart
Digital Air Fryer+

RJ38RDOPV12UG091224

Chefman® is a registered trademark of RJ Brands, LLC.
ExacTemp® is a registered trademark of RJ Brands, LLC.