CHEFMAN

Crispinator™

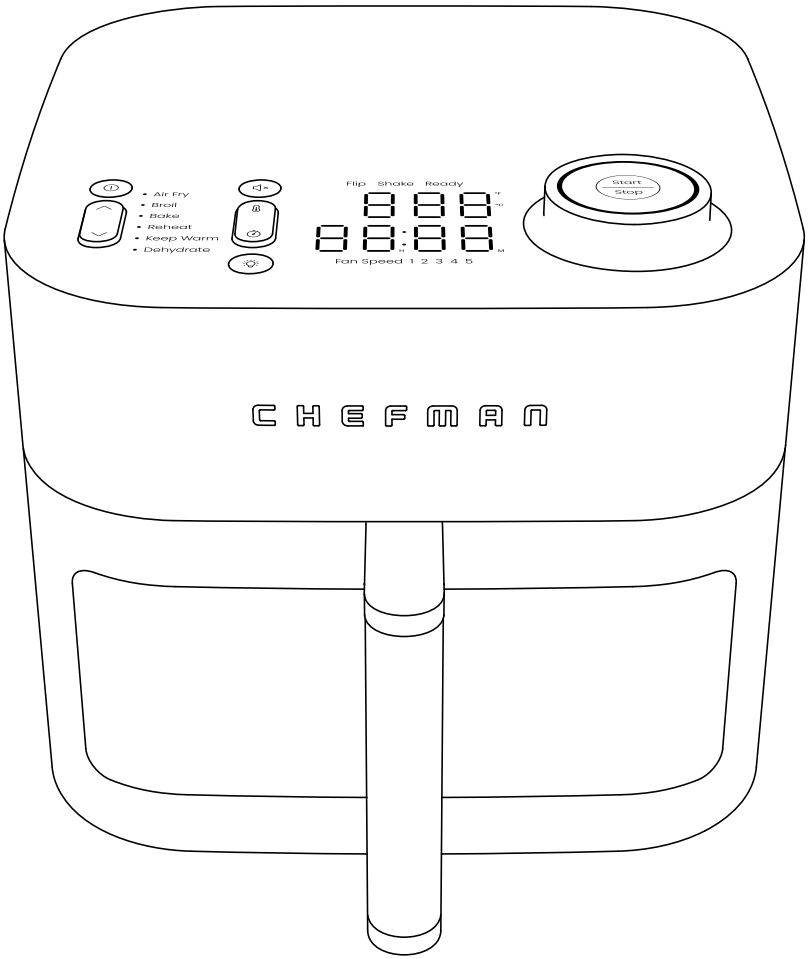

C38-8W-1-US-SERIES









Table of Contents

4	Get to Know Your Crispinator
5	Control Panel
6	Safety Instructions & Important Safeguards
10	Before First Use
11	Quick Start: How to Cook in the Crispinator
14	Cook Functions at a Glance
15	Cooking Tips
16	50 Ways to Cook in your Crispinator
21	Keep It Clean
22	Having Trouble?
23	Notes
24	Terms & Conditions
27	Warranty Registration

Get to Know Your Crispinator

1. Nonstick basket rack
2. Control panel
3. Time | Temperature adjustment knob
4. Heating element | fan (on ceiling)
5. Interior light
6. 8-quart capacity basket
7. Basket window
8. Basket handle

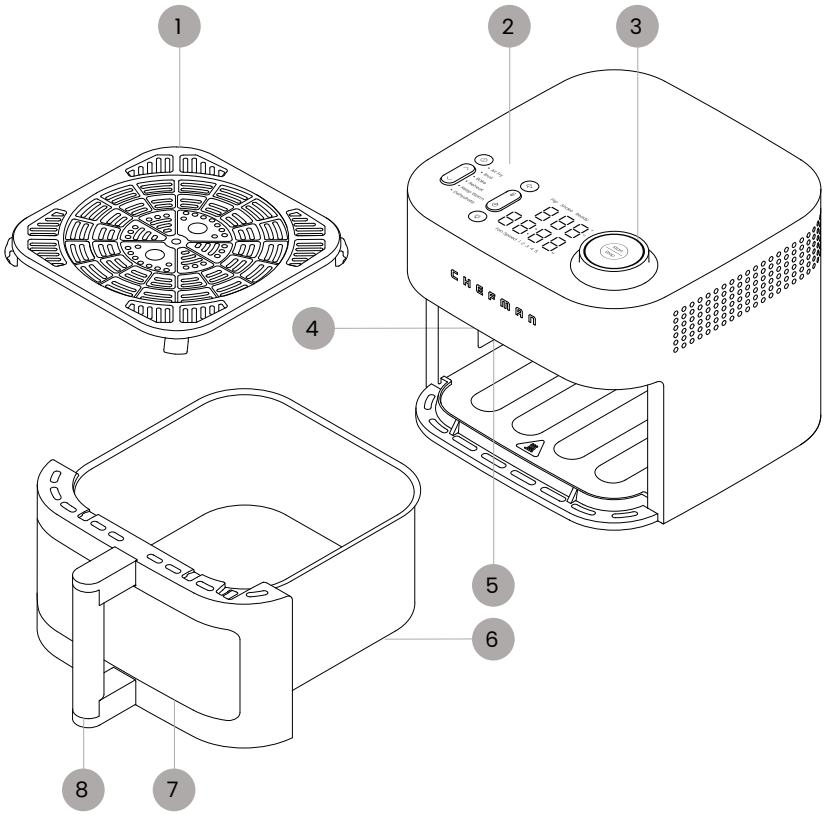

C38-8W-1-US-SERIES_UG_LIVE_040126.indd 4 4/1/26 4:03 PM

Control Panel

1. Power button
2. Cook function indicator lights
3. Time | Temperature* selector
4. Mute button
5. Flip | Shake | Ready lights
6. Temperature display
7. Time | Temperature adjustment knob
8. Start | Stop button
9. Time display
10. Fan speed indicators
11. Interior light button
12. Cook function selector

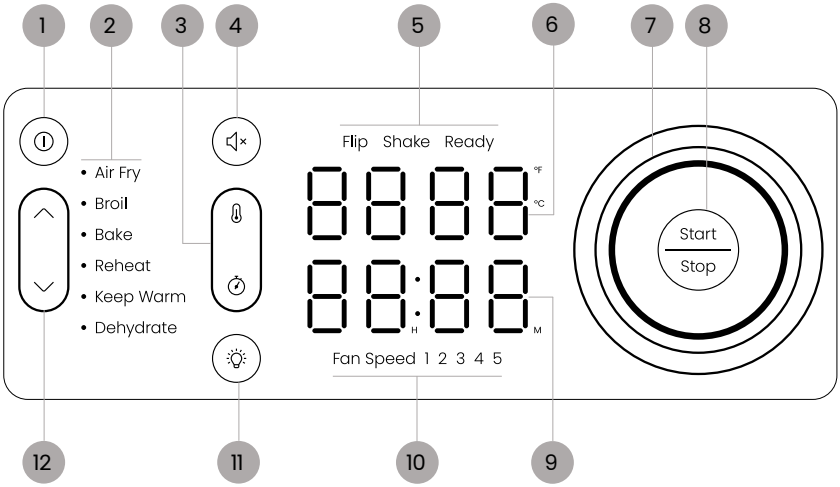

* Press and hold the temperature side of the selector for 3 seconds to switch between °F and °C.

READ ALL INSTRUCTIONS BEFORE USE

For your safety and continued enjoyment of this product, always read the instruction manual before using.

C38-8W-1-US-SERIES_UG_LIVE_040126.indd 5 4/1/26 4:03 PM

SAFETY INSTRUCTIONS & IMPORTANT SAFEGUARDS

When using electrical appliances, basic safety precautions should always be followed, including:

1. Read all instructions.
2. **Do NOT** touch hot surfaces. Use handles or knobs.
3. To protect against electric shock, do not immerse cord, plugs, or unit body in water or other liquids.
4. Close supervision is necessary when any appliance is used by or near children.
5. Unplug from outlet when not in use and before cleaning. Allow to cool before putting on or taking off parts, and before cleaning the appliance.
6. **Do NOT** operate any appliance with a damaged cord or plug or after the appliance malfunctions, or has been damaged in any manner. Contact Chefman Customer Support for examination, repair, or adjustment.
7. The use of accessory attachments not recommended by Chefman may cause injuries.
8. **Do NOT** use outdoors.
9. **Do NOT** let cord hang over edge of table or counter, or touch hot surfaces.
10. **Do NOT** place on or near a hot gas or electric burner, or in a heated oven.
11. Extreme caution must be used when moving an appliance containing hot oil or other hot liquids.
12. To disconnect, turn any control to off, then remove plug from wall outlet.
13. **Do NOT** use the appliance for anything other than its intended use.
14. Place the unit on a flat, sturdy, heat-resistant surface. **Do NOT** place the unit near or on any type of heat source, such as a gas or electric burner, stove, or oven, even if not on. **Do NOT** use near an open flame or flammable materials.
15. The unit will emit some heat. Allow sufficient space around the unit when in use, and **do NOT** place near other items or appliances.
16. Check that your home power supply corresponds with the intended voltage of the air fryer.

C38-8W-1-US-SERIES_UG_LIVE_040126.indd 6 4/1/26 4:03 PM

SAFETY INSTRUCTIONS & IMPORTANT SAFEGUARDS

17. Never wrap the cord tightly around the appliance during use or storage; this may cause the wire to fray and break.
18. This product is not a deep fryer. It is **NOT** meant to be filled with oil. Never fill any parts of the air fryer with oil. If you choose to use oil, toss food with oil in a separate bowl and then transfer food to the removable rack or basket.
19. **Do NOT** leave uncooked ingredients in the air fryer for more than a short period of time before cooking; raw meat, poultry, fish, fruits, and vegetables can spoil.
20. **Do NOT** move the air fryer while it is full of food.
21. **Do NOT** move the unit during use. During initial use, you may notice some smoke and/or a slight odor. This is normal and should quickly dissipate. It should not happen after the appliance has been used a few more times.
22. **Do NOT** leave the air fryer unattended during use.
23. Some areas do get **HOT** during use, and the touch screen may get warm. **Do NOT** touch the heating elements. **Do NOT** place hands or other body parts near the air vents while the air fryer is in use; burns may result. Take caution when handling the hot air fryer rack and all removable parts.
24. Use protective mitts and/or tongs to remove hot food from the air fryer.

SAVE THESE INSTRUCTIONS FOR HOUSEHOLD USE ONLY

C38-8W-1-US-SERIES_UG_LIVE_040126.indd 7 4/1/26 4:03 PM

SAFETY INSTRUCTIONS & IMPORTANT SAFEGUARDS

WARNING: This appliance has a polarized plug (one blade is wider than the other). This plug is intended to fit into a polarized outlet only one way. If the plug does not fit fully into the outlet, reverse the plug. If it still does not fit, contact a qualified electrician. Do not attempt to modify the plug in any way or force it into the outlet. This could result in injury or electric shock.

Short Cord Instructions

A short power-supply cord is provided to reduce the hazards of entanglement or tripping over a longer cord. Longer detachable power-supply cords or extension cords are available and may be used if care is exercised in their use. If a longer detachable power-supply extension cord is used:

1. The marked electrical rating of the extension cord should be at least as great as the electrical rating of the appliance.
2. The longer cord should be arranged so that it will not drape over the countertop or tabletop where it can be pulled on by children or tripped over.

C38-8W-1-US-SERIES_UG_LIVE_040126.indd 8 4/1/26 4:03 PM

SAFETY INSTRUCTIONS & IMPORTANT SAFEGUARDS

Power Cord Safety Tips

1. Never pull or yank on the cord or the appliance.
2. To insert the plug, grasp it firmly and guide it into the outlet.
3. To disconnect the appliance, grasp the plug and remove it from the outlet.
4. Never use the product if the power cord shows signs of abrasion or excessive wear. Contact Chefman Customer Support for additional guidance and support.
5. Never wrap the cord tightly around the appliance, as this could place undue stress on the cord where it enters the appliance and cause it to fray and break.

DO NOT OPERATE THE APPLIANCE IF THE POWER CORD SHOWS ANY DAMAGE OR IF THE APPLIANCE WORKS INTERMITTENTLY OR STOPS WORKING ENTIRELY.

California Proposition 65:
(Applicable for California Residents only)
WARNING: Cancer and Reproductive Harm
www.P65Warnings.ca.gov

Do not place the appliance on a stovetop or any other heatable surface, even if stovetop is not on.
Doing so is a fire hazard.

C38-8W-1-US-SERIES_UG_LIVE_040126.indd 9 4/1/26 4:03 PM

Before First Use

1. Remove all packaging materials, such as plastic bags and foam inserts. Check to ensure that all parts and accessories are accounted for.
2. Read and remove any stickers on the unit except for the rating label, which should remain on the unit.
3. Wipe down the interior and exterior with a damp cloth.
4. Wash the basket and rack with warm, soapy water. Dry thoroughly.

C38-8W-1-US-SERIES_UG_LIVE_040126.indd 10 4/1/26 4:03 PM

Quick Start:
How to Cook in the Crispinator

The Crispinator's powerful DC motor produces higher temperatures and fan speeds, to cook your favorite foods even more quickly than standard air fryers, with perfect results each time. The rack in the basket allows air to circulate around foods for even cooking and crisping, and lets excess fat drip down and away from foods for healthier eating.

CAUTION: Never fill the basket with oil. Unlike deep fryers, air fryers require little to no oil to produce a crisp texture. If you choose to use oil, toss foods with just a little in a separate bowl before cooking in the air fryer.

1. Place the air fryer on a hard, flat surface with at least 6 inches of clearance on top and in back for proper airflow, then plug in the air fryer.

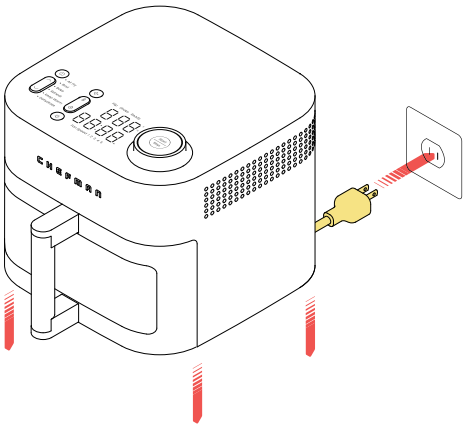

2. Lower the rack into the basket, making sure the feet are pointing down. There should be a small amount of space between the rack and the bottom of the basket. Press down on the rack to ensure it is secure and level. **CAUTION:** Never use aerosol cooking spray on the air fryer's nonstick parts, as it can cause the coating to chip.

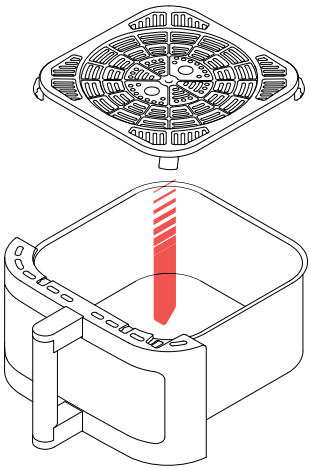

C38-8W-1-US-SERIES_UG_LIVE_040126.indd 11 4/1/26 4:03 PM

3. Place the food on the rack and slide the basket into the air fryer.

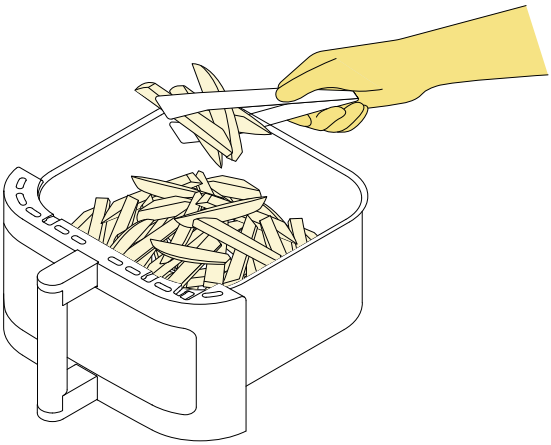

4. Use the up/down arrows on the **Cook function selector** to choose a function (see p. 14 for their descriptions and differences). Press the thermometer icon on the **Time | Temperature selector**, then use the **Time | Temperature adjustment knob** to set the temperature. Press the clock icon on the **Time | Temperature selector**, then use the knob again to set the timer.

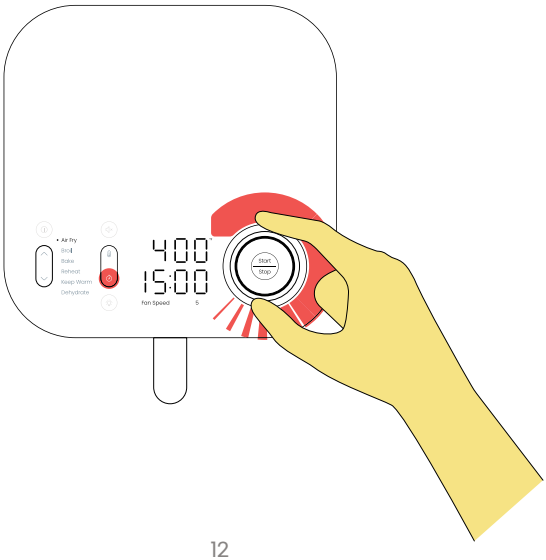

C38-8W-1-US-SERIES_UG_LIVE_040126.indd 12 4/1/26 4:03 PM

5. Press **START** to begin cooking.

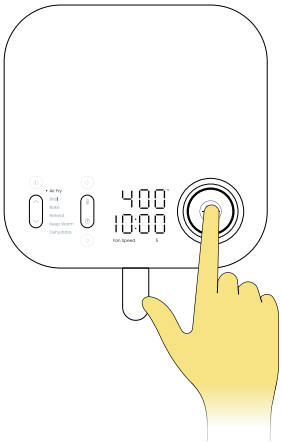

6. Depending on your cook function, the **Shake** or **Flip** reminder lights on the control panel may turn on (and the unit beep) halfway through the cook time. Remove the basket and shake (or flip) food, then return the basket to the unit to continue cooking. If your food does not need to be shaken or flipped, simply ignore the warning and it will turn off after about 60 seconds. **NOTE:** You can press the interior light button OR remove the basket at any time during cooking to check on foods. When you return the basket to the unit, cooking will resume where it left off.

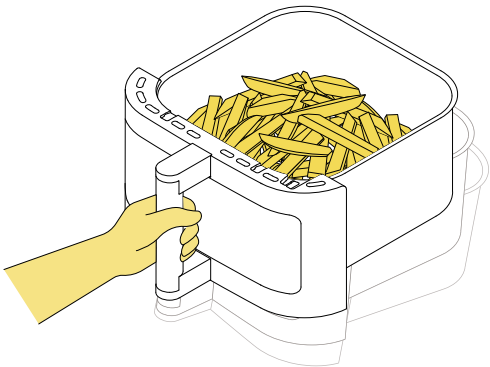

7. When the timer is done, the air fryer will beep, cooking will stop, and the **Ready** light will display. Remove the basket, check food for doneness, and serve.

C38-8W-1-US-SERIES_UG_LIVE_040126.indd 13 4/1/26 4:03 PM

Cook Functions at a Glance

The 6 cook functions and 5 fan speeds make your Crispinator way more versatile than the average air fryer. By varying the fan speed, time, and temperature, they let you bake, broil, reheat leftovers, and more.

Function	Default Time	Temperature Range	Fan Speed	Flip or Shake alert?
Air Fry	15 minutes	350°F–450°F	100% (5)	Shake alert, halfway through cook times 5 minutes or longer
Broil	10 minutes	425°F–450°F	60% (3)	Flip alert, halfway through cook times 5 minutes or longer
Bake	30 minutes	300°F–450°F	40% (2)	None
Reheat	5 minutes	250°F–400°F	80% (4)	Flip alert, halfway through cook times 5 minutes or longer
Keep Warm	30 minutes	170°F–275°F	60% (3)	None
Dehydrate	6 hours	90°F–200°F	20% (1)	None

Digital Cookbook
Scan here for a digital cookbook of delicious recipes created by our expert chefs especially for your Crispinator.

C38-8W-1-US-SERIES_UG_LIVE_040126.indd 14 4/1/26 4:03 PM

Cooking Tips

- **While not necessary, preheating the unit will cook foods faster** and promote crisp results. If the unit is cold, add a few minutes to your expected cooking time. **CAUTION:** Be careful when adding food after preheating, as the inside of the air fryer will be hot.
- S**ome foods, especially if fresh, benefit from being tossed with a little oil** in a separate bowl before air frying. However, high-fat foods, like a well-marbled steak, or prepared foods usually require no additional oil.
- **Loose, wet batters, such as tempura or beer batter, should not be used** in the air fryer, as the batter does not set quickly and will drip off the food. Instead, stick to thick, pasty batters or breaded foods like chicken nuggets.
- **Don't overcrowd the basket**. Too much food, especially if tightly packed, can inhibit browning and crisping. A better bet is to cook food in batches.
- **To mute the air fryer's beeps,** such as the Shake | Flip notification or end-of-cook notification, press the Mute button once. To turn the sound back on, press Mute again.
- **Some baked goods, especially cookies, benefit from resting** in the air fryer for about 5 minutes after cooking time is up. Letting the temperature in the basket decrease gradually rather than suddenly will help the cookies finish baking more evenly all over.
- **Though the cook functions are programmed with a default fan speed,** you can adjust the speed for certain situations—for instance to reheat delicate foods such as pastries or thin fish fillets at a lower speed than 4 (the default for Reheat). To adjust the speed, press and hold the Light button for 3 seconds, then use the Time | Temperature knob to change the speed (you'll see the fan speed indicator lights changing). When you've selected your desired speed, press the Start | Stop button to confirm. You'll need to press it again to start the cook. Once the cook finishes, the fan speed will reset to the default. **NOTE:** Adjusting the speed may produce different results than what is listed in the charts beginning on p. 16.
- **Shake the basket during cooking for even cooking.** When air frying or cooking frozen food, a good shake is especially beneficial for smaller foods like french fries, onion rings, and chicken wings. For larger or more fragile foods, consider gently tossing or flipping for even results.
- **Check on foods early.** Check foods on the earlier side of the cooking time to avoid overcooking. You can always slide the basket back in to continue cooking.
- **Because air fryer temperatures and food sizes can vary,** do not rely exclusively on recipe timing when cooking food. Check foods for doneness against current food safety guidelines before serving.

C38-8W-1-US-SERIES_UG_LIVE_040126.indd 15 4/1/26 4:03 PM

50 Ways to Cook in Your Crispinator

Use these handy charts as a guideline for using the different cook functions to prepare some of your favorite foods. The quantities suggested below allow ample room for airflow but can be adjusted—keep in mind that the fuller the air fryer basket, the more time is required. The times suggested are averages; always check foods for doneness against current food safety guidelines before serving.

Air Fry



Frozen Food	Amount/Prep	Oil?	Time (min)	Temp (°F)	Shake/Flip
French fries (standard)	1 lb	No	12–15	450	Shake once
French fries (standard)	1½ lb	No	16–18	450	Shake once
French fries (thick)	1½ lb	No	18–20	450	Shake once
Chicken nuggets/ tenders	1 lb	No	10–13	435	Shake once
Fish sticks	1 lb, in one even layer	No	15–17	425	No
Tater tots	2 lb	No	20–22	450	Shake once
Coconut shrimp	about 1 dozen pieces (½ lb)	No	10–13	425	Shake once
Mozzarella sticks	2 lb	No	8–10	400	Shake once

C38-8W-1-US-SERIES_UG_LIVE_040126.indd 16 4/1/26 4:03 PM

Veggies	Amount/Prep	Oil?	Time (min)	Temp (°F)	Shake/Flip
Asparagus	1 bunch, tough ends trimmed	Yes	6–9	400	Shake once
Brussel sprouts	1 lb (about 25), halved	Yes	13–15	380	Shake once
Carrots	1 lb, peeled, cut into 1" pieces	Yes	15	400	Shake once
Potatoes (red/yellow)	1 lb, cut into 1" chunks	Yes	15	400	Shake once
Sweet potato pieces	1 lb, peeled, cut into 1" chunks	Yes	13–15	400	Shake once
Seafood	**Amount/Prep**	**Oil?**	**Time (min)**	**Temp (°F)**	**Shake/Flip**
Crab cakes	4 cakes, 4-oz each	No	12–15	375	No
Salmon	2 fillets, 6-oz each	Brush skin lightly, if needed	8–12	375	No
Meat	**Amount/Prep**	**Oil?**	**Time (min)**	**Temp (°F)**	**Shake/Flip**
Chicken breast (skinless)	4 breasts, 6–8 oz each	Brush lightly	15–20	375	Flip once
Bone-in chicken thigh	4 thighs	No	18–25	400	No
Chicken wings (drumettes and flats)	15 pieces, about 1½ lb	No	22–25	450	Shake once
Bone-in pork chops	2 1"-thick chops	Brush lightly	15–18	400	Flip once

C38-8W-1-US-SERIES_UG_LIVE_040126.indd 17 4/1/26 4:03 PM

Bake



Proteins	Amount/Prep	Oil?	Time	Temp (°F)	Shake/Flip
Stuffed fish fillets	4 fillets	Brush lightly	10–13 min	375	No
Stuffed chicken breasts	2 breasts	Brush lightly	22–25 min	375	No
Pastry	**Amount/Prep**	**Oil?**	**Time (min)**	**Temp (°F)**	**Shake/Flip**
Cake*store-bought batter	450–455g in an 8" round pan	No	23–25	350	No
Cupcakes	1 doz	No	18–20	300	No
Slice-and-bake cookies**	6–9 pieces, about 1 oz each	No	13–15	320	No
Yeasted breads	1 doz dinner rolls	No	13–15	305	No
Other	**Amount/Prep**	**Oil?**	**Time (min)**	**Temp (°F)**	**Shake/Flip**
Whole russet potato	2, poked with a fork	No	40–45	400	No
Whole sweet potato	2, poked with a fork	No	35–40	400	No
Baked pasta dishes	6–8"-diameter ramekin	No	7–9	350	No

*After baking ends, let cakes rest 20 to 30 minutes before removing from the pan.
**After baking ends, let cookies rest in air fryer for 5 minutes before opening. Transfer to a cooling rack and let cool before enjoying.

C38-8W-1-US-SERIES_UG_LIVE_040126.indd 18 4/1/26 4:03 PM

Broil



Seafood	Amount/Prep	Oil?	Time (min)	Temp (°F)	Shake/Flip
Thin fish fillet (e.g., flounder)	2 fillets	Yes	4–6	450	No
Thick fish fillet (e.g., salmon or halibut)	2 fillets (6 oz each)	Yes	11–15	450	No
Large shrimp (31–40 per lb)	1 lb, thawed	Yes	6–8	435	Shake once
Meat	**Amount/Prep**	**Oil?**	**Time (min)**	**Temp (°F)**	**Shake/Flip**
Steak	1–2 steaks, about 1" thick	Brush lightly	12–23 (16 med)	425	Flip once
Beef burgers	4 patties, about 4 oz each	Brush lightly	9–10 (med)	425	No
Other	**Amount/Prep**	**Oil?**	**Time (min)**	**Temp (°F)**	**Shake/Flip**
Melt		No	3–4 min	425	No
Brown		No	5–6 min	450	No
Brûlée (e.g., Crème brûlée)		No	8–10 min	450	No

C38-8W-1-US-SERIES_UG_LIVE_040126.indd 19 4/1/26 4:03 PM

Dehydrate



Fruit	Amount/Prep	Oil?	Time	Temp (°F)	Shake/Flip
Citrus	⅛" thick slices	No	4–6 hrs	165	No
Bananas	¼" thick slices	No	8–10 hrs	135	No
Strawberries	¼" thick slices	No	10 hrs	130	No
Apples	⅛" thick slices	No	6–12 hrs	135	No
Other	**Amount/Prep**	**Oil?**	**Time**	**Temp (°F)**	**Shake/Flip**
Herbs	1 bunch	No	8–16 hrs	110	No
Beef jerky	⅛-¼" slices	No	3 hrs	165	No

Reheat

Food	Amount/Prep	Oil?	Time (min)	Temp (°F)	Shake/Flip
Pizza slice	1-2 slices	No	5	375	No
Veggies	1-4 servings	No	5–10	375	Shake once
Veggies	4-6 servings	No	10–15	375	Shake once
Large proteins	4-6 servings	No	15–20	300	No
Small proteins	1-4 servings	No	5–10	375	Flip once
Fried foods	1-4 servings	No	10–15	350	Shake/Flip once
Fried foods	4-6 servings	No	10–20	350	Shake/Flip once

C38-8W-1-US-SERIES_UG_LIVE_040126.indd 20 4/1/26 4:03 PM

Keep It Clean

1. With its nonstick coating and dishwasher-safe parts, the air fryer is super easy to clean.
2. Unplug the air fryer and let it cool completely before cleaning.
3. To remove the cooled rack from the basket, pull the rack straight up and out, using the center holes for easier handling. **CAUTION: Do NOT** lift the rack out of the basket when hot.
4. Wash the basket and rack with warm, soapy water, then rinse and dry well. The basket and rack are also top-rack dishwasher safe. **Do NOT** use glass cleaner on the basket window.
5. Wipe down the interior and exterior with a damp cloth. **Do NOT** put the unit in the dishwasher or submerge in water or any other liquid. **Do NOT** use abrasive cleansers, or you could damage the finishes.
6. Dry the unit and all accessories completely before storing.

C38-8W-1-US-SERIES_UG_LIVE_040126.indd 21 4/1/26 4:03 PM

Having Trouble?

Problem	Likely Cause	Solution
Air-fried food isn't golden brown and crisp.	Food wasn't tossed in oil.	While you can air fry with no added oil, coating foods very lightly with oil (usually just ½ teaspoon per batch) helps guarantee crisp results. Preheating the air fryer also helps.
Air fried food cooked unevenly.	Food was overcrowded in the basket; food was not shaken or flipped during cooking.	Fill the air fryer basket loosely with food to let air circulate. When air frying or cooking frozen food, shake, toss, or flip foods at least once during cooking for more even results.
Baked goods cooked unevenly.	Food had not finished baking all the way through.	Let your food rest after the baking finishes. See footnotes on p. 18.
Smoke is coming from the unit.	There is too much fat in the air fryer.	Avoid cooking very fatty foods, such as sausages, in the air fryer, and be sure the basket, rack, and interior of the unit are clean before cooking. Otherwise, contact Chefman Customer Support for assistance.
An error code displays on the control panel.	E01: short circuit E02: open circuit E03: fan stopped working due to high temperature. E04: unit overheated.	For E01 or E02, contact Chefman Customer Support. For E03 or E04, let the unit cool down for about 30 minutes. If the problem is not resolved, contact Chefman Customer Support.

C38-8W-1-US-SERIES_UG_LIVE_040126.indd 22 4/1/26 4:03 PM

Notes

C38-8W-1-US-SERIES_UG_LIVE_040126.indd 23 4/1/26 4:03 PM

Terms & Conditions

Limited Warranty
RJ Brands, LLC d/b/a Chefman® offers a limited 5-year Warranty (the "Warranty") available on sales through authorized distributors and retailers only. Please note that this Warranty becomes valid from the date of delivery and that the Warranty is nontransferable and applies only to the original purchaser.

This Warranty is void without proof of purchase within the United States and Canada. Please be aware that this Warranty supersedes all other warranties and constitutes the entire agreement between the consumer and Chefman®. Any changes to the Terms and Conditions of this Warranty must be in writing, signed by a representative of Chefman®. No other party has the right or ability to alter or change the Terms and Conditions of this Warranty.

We may ask you to please submit, via email, photos and/or video of the issue you are experiencing. This is to help us better assess the matter and possibly offer a quick fix. Photos and/or video may also be required to determine Warranty eligibility.

We encourage you to register your product. Registering can make the Warranty process easier and can keep you informed of any updates or recalls on your product. To register, follow the directions on the Chefman® Warranty Registration page in the Chefman® User Guide. Please retain your proof of purchase even after registering. In the event that you do not have proof of your purchase date, we may declare your Warranty void or we may, at our sole discretion, apply the date of manufacture as the purchase date for purposes of this Warranty.

C38-8W-1-US-SERIES_UG_LIVE_040126.indd 24 4/1/26 4:03 PM

What the Warranty Covers

- **Manufacturer Defects**
  Chefman® products are warranted against defects in material and workmanship, under normal household use, for a period of 5 years from the date of delivery when used in accordance with the directions listed in the Chefman® User Guide. If your product does not work as it should, please contact Customer Support at support@chefman.com so that we may assist you;

This Warranty Does Not Cover

- **Misuse**
  Damage that occurs from neglectful or improper use of products, including, but not limited to, damage that occurs as a result of usage with incompatible voltage, regardless of whether the product was used with a converter or adapter. See Safety Instructions in the Chefman® User Guide for information on proper use of product;

- **Poor Maintenance**
  General lack of proper care. We encourage you to take care of your Chefman® products so that you may continue to enjoy them. Please see Keep It Clean directions in this Chefman® User Guide for information on proper maintenance;

- **Commercial Use**
  Damage that occurs from commercial use;

- **Normal Wear and Tear**
  Damage or degradation expected to occur due to normal use over time;

- **Altered Products**
  Damage that occurs from alterations or modifications by any entity other than Chefman® such as the removal of the rating label affixed to the product;

- **Catastrophic Events**
  Damage that occurs from fire, floods, or natural disasters; or

- **Loss of Interest**
  Claims of loss of interest or enjoyment.

C38-8W-1-US-SERIES_UG_LIVE_040126.indd 25 4/1/26 4:03 PM

For product information, please visit us at Chefman.com.

EXCEPT WHERE SUCH LIABILITY IS REQUIRED BY LAW, THIS WARRANTY DOES NOT COVER, AND CHEFMAN® SHALL NOT BE LIABLE FOR, INCIDENTAL, INDIRECT, SPECIAL, OR CONSEQUENTIAL DAMAGES, INCLUDING WITHOUT LIMITATION, DAMAGE TO, OR LOSS OF USE OF THE PRODUCT, OR LOST SALES OR PROFITS OR DELAY OR FAILURE TO PERFORM THIS WARRANTY OBLIGATION. THE REMEDIES PROVIDED HEREIN ARE THE EXCLUSIVE REMEDIES UNDER THIS WARRANTY, WHETHER BASED ON CONTRACT, TORT OR OTHERWISE.

C38-8W-1-US-SERIES_UG_LIVE_040126.indd 26 4/1/26 4:03 PM

Warranty Registration

What do I need to register my product?

- Contact Information
- Model Number (see example below)
- Proof of Purchase (online confirmation, receipt, gift receipt)
- Date Code (see example below)
- Access Code (see example below)

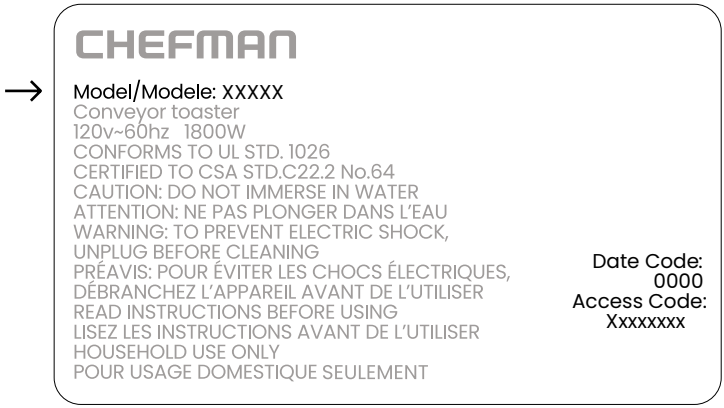

NOTE: Label depicted here is an example.
Please see label on your product for actual model/date code/access code.

How do I register my product?

All you need to do is fill out a simple Chefman® registration form.
You can easily access the form in one of the two ways listed below:

- Visit Chefman.com/register.
- Scan the QR code to the right to access site.

C38-8W-1-US-SERIES_UG_LIVE_040126.indd 27 4/1/26 4:03 PM







C38BWIUSSERIESUG040126

Chefman® is a registered trademark of RJ Brands, LLC.

