CHEFMAN Crisp n' Go™
Glass-Bowl Air Fryer

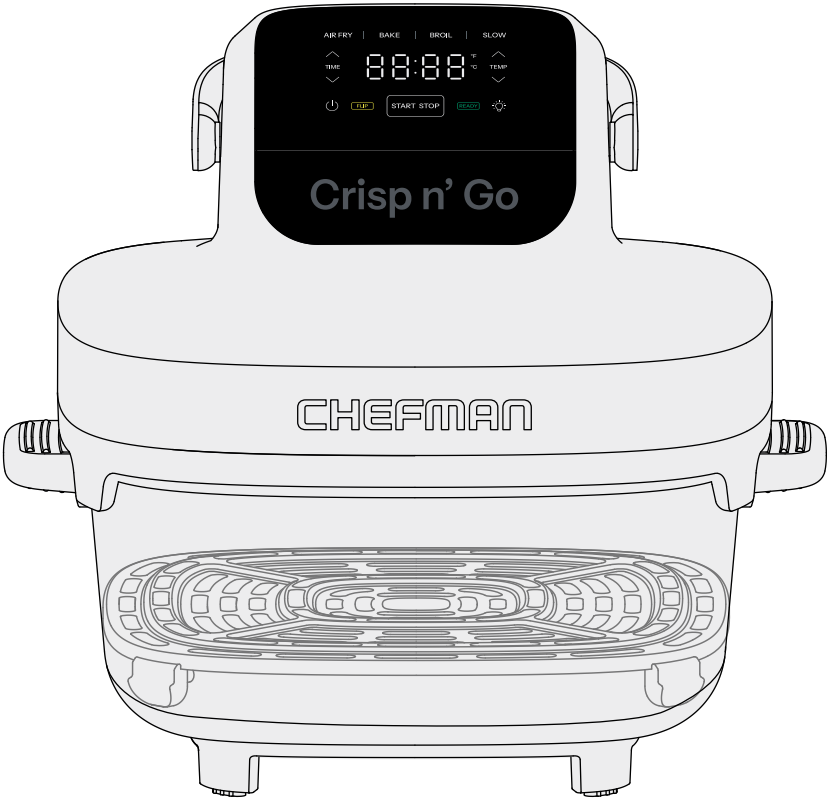

RJ38-G4-SERIES

READ ALL INSTRUCTIONS BEFORE USE

For your safety and continued enjoyment of this product, always read the instruction manual before using.

Table of Contents

4 Get to Know Your Air Fryer
5 Control Panel
6 Safety Instructions & Important Safeguards
10 Before First Use
11 Quick Start: How to Cook in the Crisp n' Go™
15 Cooking Functions at a Glance
16 Cooking Tips
17 Air Fryer Cooking Chart
19 Keep It Clean
20 Having Trouble?
21 Notes
24 Terms & Conditions
27 Warranty Registration

Get to Know Your Air Fryer

1. Top handle
2. Control panel
3. Cooking Top
4. Heating element/convection fan (on underside of cooking top)
5. Nonstick cooking rack
6. Rack feet (4)
7. Silicone handle covers
8. Tempered glass cooking bowl
9. Bowl handles (2)
10. Storage lid

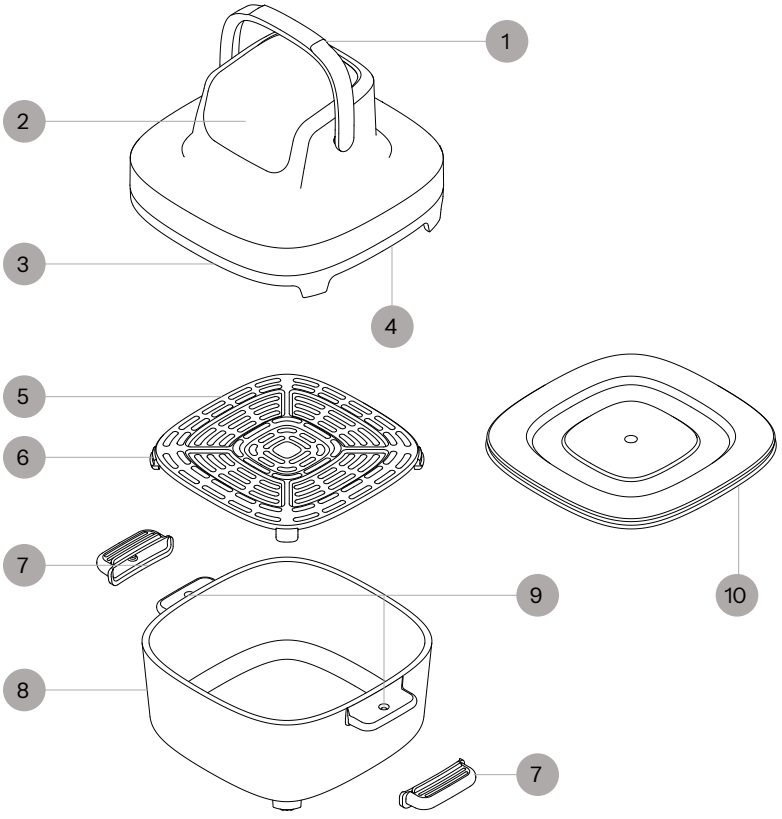

Control Panel

1. Cook function buttons: AIR FRY, BAKE, BROIL, SLOW/DRY*
2. Time | Temperature display
3. TIME and TEMP adjustment buttons**
4. Internal light button
5. READY light
6. START | STOP button
7. FLIP reminder light
8. Power button

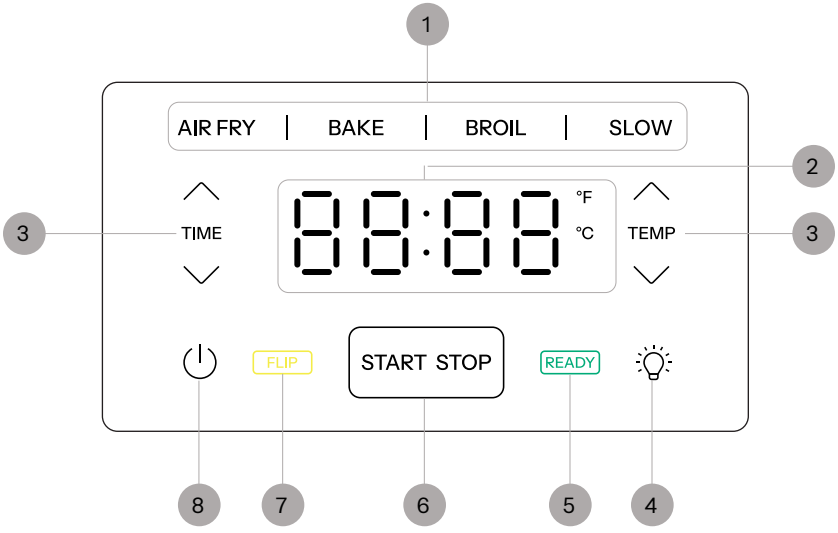

*To activate the DRY (dehydrate) function, press and hold the SLOW button for 5 seconds.

**To switch between Fahrenheit and Celsius, press and hold the TEMP ⌃⌄ buttons for 3 seconds. To mute the air fryer's beeps, press and hold the TIME ⌃⌄ buttons for 3 seconds.

SAFETY INSTRUCTIONS & IMPORTANT SAFEGUARDS

When using electrical appliances, basic safety precautions should always be followed, including:

1. Read all instructions.
2. **Do NOT** touch hot surfaces. Use protective mitts and handles.
3. To protect against electric shock, **do NOT** immerse cord, plugs, or unit body in water or other liquids.
4. Close supervision is necessary when any appliance is used by or near children.
5. Unplug from outlet when not in use and before cleaning. Allow to cool before putting on or taking off parts, and before cleaning the appliance.
6. **Do NOT** operate any appliance with a damaged cord or plug or after the appliance malfunctions, or has been damaged in any manner. Contact Chefman Customer Support for examination, repair, or adjustment.
7. The use of accessory attachments not recommended by Chefman may cause injuries.
8. **Do NOT** use outdoors.
9. **Do NOT** let cord hang over edge of table or counter, or touch hot surfaces.
10. **Do NOT** place on or near a hot gas or electric burner, or in a heated oven.
11. Extreme caution must be used when moving an appliance containing hot oil or other hot liquids.
12. To disconnect, turn any control to OFF, then remove plug from wall outlet.
13. **Do NOT** use the appliance for anything other than its intended use.
14. Place the unit on a flat, sturdy, heat-resistant surface. **Do NOT** place the unit near or on any type of heat source, such as a gas or electric burner, stove, or oven, even if not on. **Do NOT** use near an open flame or flammable materials.
15. The unit will emit some heat. Allow sufficient space around the unit when in use, and **do NOT** place near other items or appliances.
16. Check that your home power supply corresponds with the intended voltage of the air fryer.

SAFETY INSTRUCTIONS & IMPORTANT SAFEGUARDS

17. Never wrap the cord tightly around the appliance during use or storage; this may cause the wire to fray and break.
18. This product is not a deep fryer. It is **NOT** meant to be filled with oil. Never fill any parts of the air fryer with oil. If you choose to use oil, toss food with oil in a separate bowl and then transfer food to the removable rack or basket.
19. **Do NOT** leave uncooked ingredients in the air fryer for more than a short period of time before cooking; raw meat, poultry, fish, fruits, and vegetables can spoil.
20. **Do NOT** move the air fryer while it is full of food.
21. **Do NOT** move the unit during use. During initial use, you may notice some smoke and/or a slight odor. This is normal and should quickly dissipate. It should not happen after the appliance has been used a few more times.
22. **Do NOT** leave the air fryer unattended during use.
23. Some areas do get **HOT** during use, and the touch screen may get warm. **Do NOT** touch the heating elements. **Do NOT** place hands or other body parts near the air vents while the air fryer is in use; burns may result. Take caution when handling the hot air fryer rack and all removable parts.
24. Use protective mitts and/or tongs to remove hot food from the air fryer.

SAVE THESE INSTRUCTIONS FOR HOUSEHOLD USE ONLY

SAFETY INSTRUCTIONS & IMPORTANT SAFEGUARDS

WARNING: This appliance has a polarized plug (one blade is wider than the other). This plug is intended to fit into a polarized outlet only one way. If the plug does not fit fully into the outlet, reverse the plug. If it still does not fit, contact a qualified electrician. Do not attempt to modify the plug in any way or force it into the outlet. This could result in injury or electric shock.

Short Cord Instructions

A short power-supply cord is provided to reduce the hazards of entanglement or tripping over a longer cord. Longer detachable power-supply cords or extension cords are available and may be used if care is exercised in their use. If a longer detachable power-supply extension cord is used:

1. The marked electrical rating of the extension cord should be at least as great as the electrical rating of the appliance.
2. The longer cord should be arranged so that it will not drape over the countertop or tabletop where it can be pulled on by children or tripped over.

Do not place the appliance on a stovetop or any other heatable surface, even if stovetop is not on. Doing so is a fire hazard.



SAFETY INSTRUCTIONS & IMPORTANT SAFEGUARDS

Power Cord Safety Tips

1. Never pull or yank on the cord or the appliance.
2. To insert the plug, grasp it firmly and guide it into the outlet.
3. To disconnect the appliance, grasp the plug and remove it from the outlet.
4. Never use the product if the power cord shows signs of abrasion or excessive wear. Contact Chefman Customer Support for additional guidance and support.
5. Never wrap the cord tightly around the appliance, as this could place stress on the cord where it enters the appliance and cause it to fray and break.

DO NOT OPERATE THE APPLIANCE IF THE POWER CORD SHOWS ANY DAMAGE OR IF THE APPLIANCE WORKS INTERMITTENTLY OR STOPS WORKING ENTIRELY.

Before First Use

1. Remove all packaging materials, such as plastic bags and foam inserts. Check to ensure that all parts and accessories are accounted for.
2. Read all stickers on the unit.
3. Wipe down the interior and exterior with a damp cloth.
4. Wash the bowl, rack, and storage lid with warm, soapy water. Dry thoroughly.

Quick Start:
How to Cook in the Crisp n' Go™

The Crisp n' Go's glass cooking bowl, high-powered multi-speed convection fan, and four distinct functions (plus a bonus DRY function) make it much more versatile than a typical air fryer, allowing you to bake cookies or muffins, broil steaks, or braise chicken thighs. The rack in the cooking bowl allows air to circulate around foods for even cooking and crisping and lets excess fat drip down and away from foods for healthier eating.

CAUTION: Never fill the cooking bowl with oil. Unlike deep fryers, air fryers require little to no oil to produce a crisp texture. If you choose to use oil, toss foods with just a little in a separate bowl before cooking in the air fryer.

1. Place the air fryer bowl on a hard, flat surface with at least 6 inches of clearance on top and in back for proper airflow.
2. Lower the rack into the bowl, making sure the rack feet are pointing down. (In a few instances, the rack is not necessary; for example, if you're cooking food with a liquid, such as broth.) There should be a small amount of space between the rack and the bottom of the bowl. Press down on the rack to ensure it is secure and level. **CAUTION:** Never use aerosol cooking spray on the air fryer's nonstick rack, as it can cause the coating to chip.

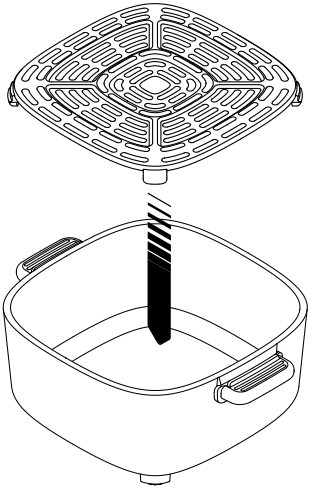

3. Place the food on the rack. To allow for good air circulation, be sure the food comes no higher than 2 inches below the top of the bowl.

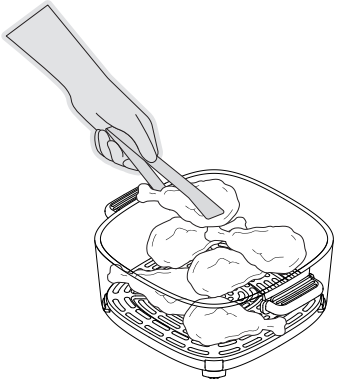

4. With the bowl handles to the sides, lower the cooking top onto the bowl with the control panel facing forward. Plug the cooking top into an electrical outlet.

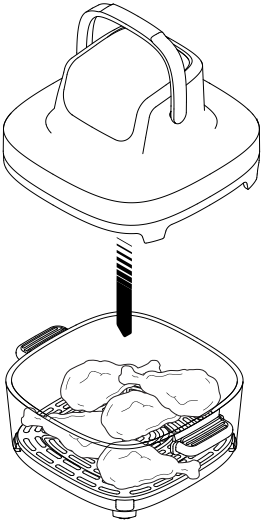

5. Select and press a cook function button: **AIR FRY, BAKE, BROIL,** or **SLOW**. You can also access the bonus **DRY** (dehydrate) function by pressing and holding the **SLOW** button for 5 seconds. The digital display will toggle back and forth between time and temperature every 5 seconds. You can adjust the default amounts using the **TIME** and **TEMP** adjustment buttons. Press **START** to begin cooking. (Refer to the Cooking Functions chart on p. 15 for default time and temperature settings.)

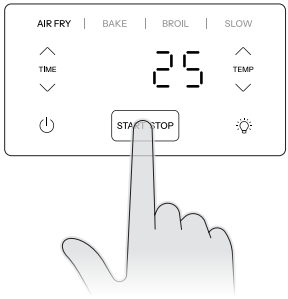

6. The internal light automatically turns on during the first 10 seconds of cooking, then turns off. However, you can turn it back on to check on your food by pressing the **Internal light** button.
7. During **BROIL** or **AIR FRY** cooking cycles, the **FLIP** reminder light on the control panel will turn on. Remove the cooking top and set it down on a heatproof surface; cooking will pause. **CAUTION:** Avoid setting the hot cooking top on non-heatproof surfaces, such as laminate or wood countertops. Carefully flip your food if desired, then return the cooking top to the unit and cooking will resume. If your food does not need to be flipped, simply ignore the warning and it will turn off after 60 seconds. **NOTE:** When the cooking top is removed, the word "Lid" will display, and cooking will stop. When the cooking top is replaced, "Lid" will turn off and cooking will resume. If the top is not replaced correctly, "Lid" will continue to display and the unit will beep

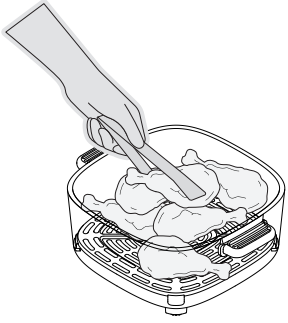

8. When the timer is done, the air fryer will beep and cooking will stop. Remove the cooking top, check food for doneness, and serve. **CAUTION**: Only pick up and carry the glass bowl after removing the cooking top, and use potholders or mitts.

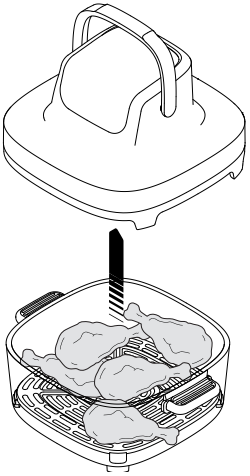

9. After serving, you can store any leftovers right in the glass cooking bowl. Simply snap on the storage lid and transfer the bowl to the refrigerator. **NOTE:** If you plan to reheat in the microwave, it's best to remove the rack before storing. To ensure food safety, follow the leftover/storage instructions in your recipe, as well as those for reheating the food. **CAUTION:** The storage lid is NOT microwave-safe; remove it before reheating.

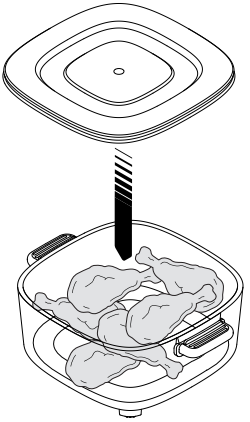

Scan here for a digital cookbook of recipes created just for your Crisp n' Go.

Cooking Functions at a Glance

Function	Default Time	Temperature Range	Fan Speed	Use it For...	Notes
AIR FRY	15 min	350°F–450°F	100%	Items you'd roast in the oven: fresh vegetables for a crisp browned finish; fresh meat and poultry, chicken wings; frozen prepared foods such as french fries and chicken tenders.	Flip reminder turns on halfway through cook time on cook cycles 10 minutes or longer. Toss fresh food in a little oil to enhance browning and crisping. Frozen foods usually don't need any additional oil.
BAKE	30 min	300°F–450°F	40%	Cupcakes, cookies, rolls... anything you'd bake in a toaster oven.	Let food sit in air fryer for 5 minutes after cooking.
BROIL	10 min	425°F–450°F	60%	Beautifully browned, perfectly cooked steaks; thicker fish fillets such as salmon, open-face sandwiches.	Flip reminder turns on halfway through cook time on cook cycles 10 minutes or longer.
SLOW	90 min	250°F–350°F	20%	Slow-roasting thicker cuts of meat, braising chicken until it's fall-off-the-bone tender, roasting vegetables.	If you're cooking food with a liquid, such as broth, we recommend not using the rack.
DRY (dehydrate)	6 hr	90°F–200°F	20%	Dehydrating fruit, berries, herbs, and more.	To use this bonus function, press and hold the SLOW button for about 5 seconds until "drY" appears on the digital display. (To switch back to the SLOW function, press the SLOW button again for about 5 seconds until "SLo" appears on the digital display.)

Cooking Tips

- Some foods, especially if fresh, benefit from being tossed with a little oil in a separate bowl before air frying. However, high-fat foods, like a well-marbled steak, or prepared foods usually require no additional oil.
- Wet, loose batters, such as tempura or beer batter, should not be used in the air fryer, as the batter does not set quickly and will drip off the food. Instead, stick to thick, pasty batters or breaded foods like chicken nuggets.
- Don't overcrowd the bowl. Too much food, especially if tightly packed, can inhibit browning and crisping. A better bet is to cook food in batches.
- For the most even cooking on the BAKE function, baked goods often benefit from resting in the closed air fryer for about 5 minutes after the cycle finishes.
- When baking cookies, lining the rack with parchment paper makes them easier to remove. Cut the parchment a little wider than the rack, creating "handles" to lift them all out together. **CAUTION:** Be sure to cut the parchment small enough that it will not touch the heating element.
- To enhance the flavor of your braises, air fry the meat or poultry first until golden-brown, then add liquid and cook on the braise function until the proteins are tender and fully cooked.
- Follow food-safety guidelines for doneness. Because air fryer temperatures and food sizes can vary, do not rely exclusively on recipe timing when cooking food. Check foods for doneness against current safety guidelines before serving.
- Leftovers can be stored in the glass cooking bowl with the storage lid, either in the refrigerator or freezer. If you plan on reheating foods in the microwave, remove the rack before storage. If you've frozen your leftovers, let them thaw in the refrigerator before reheating.
- Stored leftovers can be reheated in the Crisp n' Go (we recommend the Air Fry function at 350°F). If you prefer reheating in the microwave, the bowl is microwave-safe but the rack and storage lid are not. The bowl and the lid are NOT oven-safe.

Air Fryer Cooking Chart

Function	Food	Amount/Prep	Time	Temp	Toss/ Flip	Notes
Air Fry	Fries (frozen)	1 lb	16-18 min	450°F	yes, halfway	
Air Fry	Chicken Wings	1 lb drums and flats	20-25 min	425°F	yes, halfway	
Air Fry	Chicken Nuggets	8-10 oz frozen (about 12-15 pieces)	9-11 min	450°F	yes, halfway	
Air Fry	Green Beans	8-10 oz lightly oiled, if desired	7-10 min	400°F	yes, halfway	
Air Fry	Brussels Sprouts	10-12 oz, trimmed and halved, lightly oiled	12-14 min	375°F	yes, halfway	
Air Fry	Shrimp	8-10 oz large shrimp, peeled and deveined (about 20-24)	8-10 min	400°F	no	
Bake	Cupcakes	6 silicone cupcake molds, filled about halfway	14-16 min	300°F	no	Let rest briefly in hot air fryer once finished to ensure baked goods are cooked through.
Bake	Dinner Rolls	4 frozen dinner rolls, thawed to room temp and proofed	12-14 min	350°F	no	Let rest in hot air fryer once finished for at least 5 minutes before removing. Brush with melted butter, if desired.
Broil	Pizza Bagel	1 half bagel, topped with sauce and shredded cheese	6-8 min	450°F	no	
Broil	Chicken Breast	1 or 2 breasts, about 8-10 oz each	20-25 min	425°F	yes, halfway	
Broil	Salmon	1 or 2 fillets, each about 1 inch thick and 6 oz	12-14 min	450°F	no	
Broil	Steak	One 1-inch-thick strip steak, lightly oiled, if desired	15-20 min	425°F	yes, halfway	Let rest at room temperature at least 5 minutes before serving.
Slow	Braised Chicken Thighs	4 bone-in, skin-on thighs, seasoned to taste and placed in bowl (no rack) with 1 1/2 to 2 cups liquid. Use stock as your liquid for best flavor.	90-120 min	300°F	no	For more coloring on top, broil vegetables (without liquid) at 450°F for 10-15 min before braising.

Function	Food	Amount/Prep	Time	Temp	Toss/ Flip	Notes
Slow	Thick-cut Steak	One 2-inch-thick strip steak, seasoned to taste	rare: 35 min med: 50 min well: 75 min	350°F	no	For more color and texture, sear steaks on high heat for about 1-2 minutes per side and rest before serving.
Slow	Thick-cut Pork Chops	One or two 2-inch bonless pork chops, seasoned to taste	med: 40 min med-well: 45 well: 50 min	300°F	no	For more color and texture, sear chops on high heat for about 1-2 minutes per side and rest before serving.
Slow	Slow-Roasted Carrots	1 lb peeled, cut into 1-inch pieces, and tossed with a little oil	45-50 min	325°F	yes	
Slow	Foil-Steamed Beets (whole)	4 large beets, ends removed, oiled and seasoned. Wrap in foil and place in bowl without rack.	1-2 hr	350°F	no	Once cooked, carefully open foil packet to cool. When cool, gently peel beets.
Dry	Apples	Cut into slices, 1/8-inch- thick	6-12 hr	135°F	no	
Dry	Strawberries	Cut into slices 1/4-inch- thick	10-12 hr	130°F	no	
Dry	Citrus	Cut into slices 1/8-inch- thick	4-6 hr	165°F	no	

Keep It Clean

With its nonstick rack and dishwasher-safe parts, the air fryer is super easy to clean.

1. Unplug the air fryer and let it cool completely before cleaning.
2. To remove the cooled rack from the bowl, hold it by the two holes in the center of the rack, then pull the rack straight up and out of the bowl. **CAUTION:** Do NOT lift the rack out of the bowl when hot.
3. Wash the bowl and rack with warm, soapy water, then rinse and dry well. The bowl, rack, and storage lid are also top-rack dishwasher safe. Though the silicone handle guards are also dishwasher safe, it's best to remove them from the bowl's handles so they don't come off in the dishwasher and get lost.
4. Wipe down the outside of the cooking top with a damp cloth. **Do NOT** put the cooking top in the dishwasher or submerge it in water or any other liquid. **Do NOT** use abrasive cleansers, or you could damage the finishes.
5. Periodically, especially after heavy use or cooking fatty foods, we recommend cleaning the grate on the underside of the cooking top that protects the heating element: Turn the top upside down. Spray a paper towel with club soda, and then use it to wipe down the grate thoroughly. Do not attempt to remove the grate or clean the heating element itself.
6. Dry the bowl, rack, and cooking top completely before storing.

Having Trouble?

Problem	Likely Cause	Solution
Food isn't golden brown and crisp.	Food wasn't tossed in oil.	While you can air fry with no added oil, coating foods very lightly with oil (usually just 1/2 teaspoon per batch) helps guarantee crisp results. Preheating the air fryer also helps.
Food cooked unevenly.	Food was overcrowded in the glass cooking bowl; food was not flipped during broiling or air frying.	Fill the cooking bowl loosely with food to let air circulate. When broiling or air frying, flip foods halfway through cooking for more even results. When baking, let the food sit in the air fryer for about 5 minutes after cooking ends before opening.
Smoke is coming from the unit.	There is too much fat in the fryer. After heavy use, fat can build up behind the grate on the underside of the cooking top. Smoke may indicate that the grate needs cleaning	Avoid cooking very fatty foods, such as sausages, in the air fryer. Clean the grate following the instructions on p. 19. If this does not correct the problem, contact Chefman Customer Support for assistance.
An error code displayed on the control panel.	Code E01: Ambient temperature is too low. Code E02: Ambient temperature is too high. Code E03: A heat sensor has come loose. Code E04: Motor has stopped working. Code E05: Heating element has stopped working.	E01 and E02: Use the air fryer in a room between 32°F and 104°F. E03, E04 and E05: Contact Chefman Customer Support.

Notes

Notes

Notes

Terms & Conditions

Limited Warranty
RJ Brands LLC d/b/a Chefman® offers a limited 1-year Warranty (the "Warranty") available on sales through authorized distributors and retailers only. Please note that this Warranty becomes valid from the date of delivery and that the Warranty is nontransferable and applies only to the original purchaser.

This Warranty is void without proof of purchase within the United States and Canada. Please be aware that this Warranty supersedes all other warranties and constitutes the entire agreement between the consumer and Chefman®. Any changes to the Terms and Conditions of this Warranty must be in writing, signed by a representative of Chefman®. No other party has the right or ability to alter or change the Terms and Conditions of this Warranty.

We may ask you to please submit, via email, photos and/or video of the issue you are experiencing. This is to help us better assess the matter and possibly offer a quick fix. Photos and/or video may also be required to determine Warranty eligibility.

We encourage you to register your product. Registering can make the Warranty process easier and can keep you informed of any updates or recalls on your product. To register, follow the directions on the Chefman® Warranty Registration page in the Chefman® User Guide. Please retain your proof of purchase even after registering. In the event that you do not have proof of your purchase date, we may declare your Warranty void or we may, at our sole discretion, apply the date of manufacture as the purchase date for purposes of this Warranty.

What the Warranty Covers

- **Manufacturer Defects**
  Chefman® products are warranted against defects in material and workmanship, under normal household use, for a period of 1 year from the date of delivery when used in accordance with the directions listed in the Chefman® User Guide. If your product does not work as it should, please contact Customer Support at support@chefman.com so that we may assist you.

This Warranty Does Not Cover

- **Misuse**
  Damage that occurs from neglectful or improper use of products, including, but not limited to, damage that occurs as a result of usage with incompatible voltage, regardless of whether the product was used with a converter or adapter. See Safety Instructions in the Chefman® User Guide for information on proper use of product;

- **Poor Maintenance**
  General lack of proper care. We encourage you to take care of your Chefman® products so that you may continue to enjoy them. Please see Keep it Clean directions in this Chefman® User Guide for information on proper maintenance;

- **Commercial Use**
  Damage that occurs from commercial use;

- **Normal Wear and Tear**
  Damage or degradation expected to occur due to normal use over time;

- **Altered Products**
  Damage that occurs from alterations or modifications by any entity other than Chefman® such as the removal of the rating label affixed to the product;

- **Catastrophic Events**
  Damage that occurs from fire, floods, or natural disasters; or

- **Loss of Interest**
  Claims of loss of interest or enjoyment.

For product information, please visit us at Chefman.com.

EXCEPT WHERE SUCH LIABILITY IS REQUIRED BY LAW, THIS WARRANTY DOES NOT COVER, AND CHEFMAN® SHALL NOT BE LIABLE FOR, INCIDENTAL, INDIRECT, SPECIAL, OR CONSEQUENTIAL DAMAGES, INCLUDING WITHOUT LIMITATION, DAMAGE TO, OR LOSS OF USE OF THE PRODUCT, OR LOST SALES OR PROFITS OR DELAY OR FAILURE TO PERFORM THIS WARRANTY OBLIGATION. THE REMEDIES PROVIDED HEREIN ARE THE EXCLUSIVE REMEDIES UNDER THIS WARRANTY, WHETHER BASED ON CONTRACT, TORT OR OTHERWISE.

Warranty Registration

What do I need to register my product?

- Contact Information
- Model Number (see example below)
- Proof of Purchase (online confirmation, receipt, gift receipt)
- Date Code (see example below)
- Access Code (see example below)

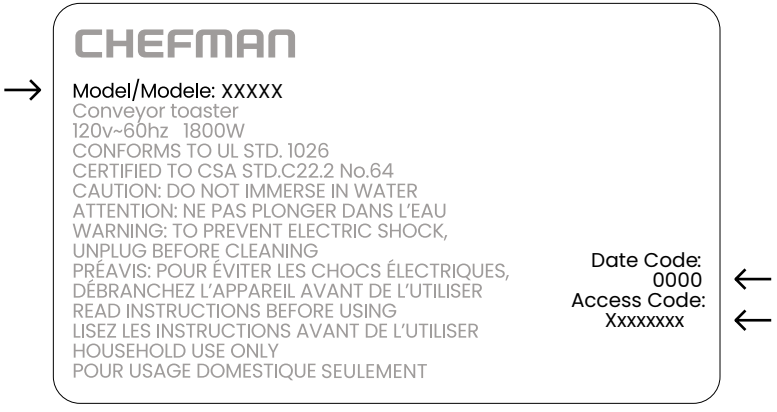

NOTE: Label depicted here is an example.
Please see label on your product for actual model/date code/access code.

How do I register my product?

All you need to do is fill out a simple Chefman® registration form.
You can easily access the form in one of the two ways listed below:

- Visit Chefman.com/register.
- Scan the QR code to the right to access site.

CHEFMAN Crisp n' Go™
Glass-Bowl Air Fryer

RJ38G4SERIESUG101326

Chefman® is a registered trademark of RJ Brands LLC.
Crisp n' Go™ is a trademark of RJ Brands LLC.