CHEFMAN

Coffee Station Pro
10-in-1 Beverage Center

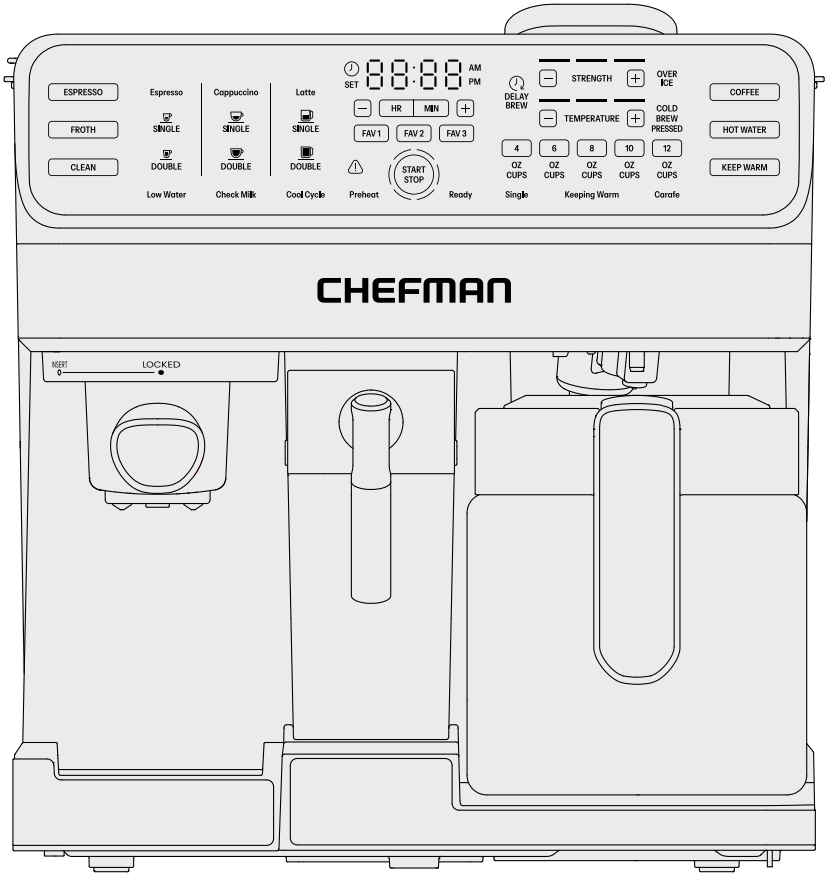

RJ54-CS-V2-SERIES

Get To Know Your Coffee Station

1. Water tank with handle
2. Control panel
3. Drip coffee carafe
4. Milk reservoir
5. Fold-down cup platform with removable rubber trivet
6. Warming plate (with HOT indicator light)
7. Nespresso® capsule basket
8. Single & double portafilter baskets
9. Measuring scoop | tamper
10. Removable espresso drip tray
11. Adjustable-height espresso coaster
12. Portafilter
13. Coffee filter holder
14. K-Cup® adapter
15. Reusable drip coffee filter basket
16. Removable accessory storage tray
17. Drip coffee shower head and K-Cup® pin



READ ALL INSTRUCTIONS BEFORE USE

For your safety and continued enjoyment of this product, always read the instruction manual before using.

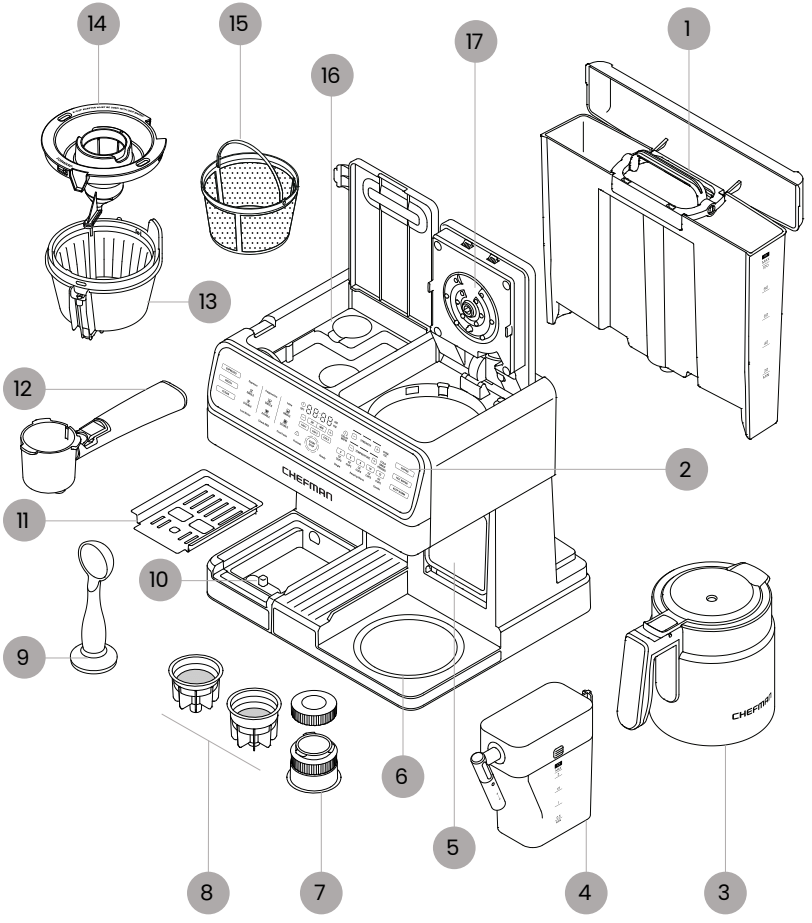
14
15
16
17
1
13
12
2
11
10
9
6
5
4
3
8
7
CHEFMAN

Control Panel

1. ESPRESSO button
2. FROTH button
3. CLEAN button
4. Espresso | Cappuccino | Latte (SINGLE and DOUBLE) buttons
5. Clock SET button
6. Clock
7. HR | MIN adjustment buttons
8. Favorite buttons
9. Ready light
10. START | STOP button
11. Preheat light
12. Preheating alert | Error warning light
13. Cool Cycle light
14. Check Milk warning light
15. Low Water warning light

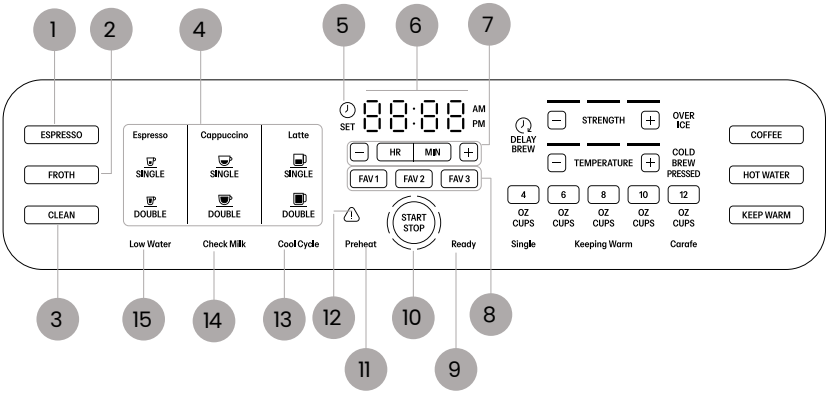

16. DELAY BREW button (drip coffee only)
17. STRENGTH | TEMPERATURE adjustment buttons
18. OVER ICE button
19. COFFEE button
20. HOT WATER button
21. KEEP WARM button
22. COLD BREW/COLD PRESSED button
23. Carafe light (illuminates when K-Cup® adapter is not inserted)
24. Keeping Warm light
25. Single light (illuminates when K-Cup® adapter is inserted)
26. Single and Carafe size selector buttons (4, 6, 8, 10 and 12 oz/cups)

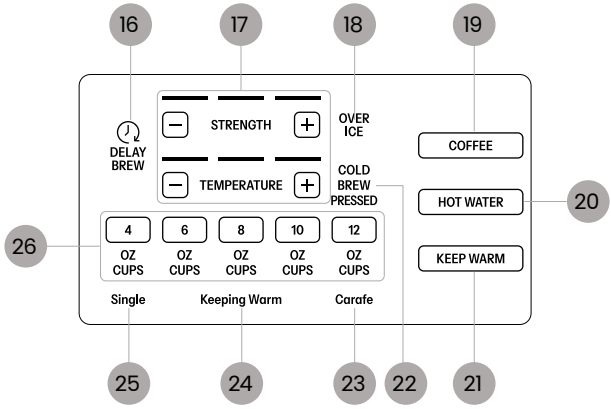

SAFETY INSTRUCTIONS & IMPORTANT SAFEGUARDS

When using electrical appliances, basic safety precautions should always be taken, including the following:

1. Read all instructions.
2. **Do NOT** touch hot surfaces. Use handle or knobs.
3. To protect against electrical shock, do **NOT** submerge the appliance or allow the power cord to come into contact with water or any other liquid.
4. Close supervision is necessary when any appliance is used by or near children.
5. This appliance is not intended for use by persons (including children) with reduced physical, sensory or mental capabilities, or lack of experience and knowledge, unless they have been given supervision or instruction concerning use of the appliance by a person responsible for their safety. Children should be supervised to ensure that they do not play with the appliance.
6. Unplug from outlet when not in use and before cleaning. Allow the appliance to cool before putting on or taking off parts, and before cleaning.
7. **Do NOT** operate any appliance with a damaged cord or plug or after the appliance malfunctions, or has been damaged in any manner. If this should occur, contact Chefman Customer Support.
8. The use of accessory attachments not recommended by Chefman may result in fire, electric shock, or injury to persons.
9. **Do NOT** use outdoors.
10. **Do NOT** let cord hang over the edge of table or counter, or touch hot surfaces.
11. **Do NOT** place on or near a hot gas or electric burner, or in a heated oven.
12. To disconnect, turn any control to off, then remove plug from wall outlet.
13. **Do NOT** use the appliance for other than intended use.
14. Scalding may occur if the lid is opened during heating cycle.
15. **Do NOT** allow young children to operate the appliance or use as a toy. Close supervision is necessary when any appliance is used near children.

SAFETY INSTRUCTIONS & IMPORTANT SAFEGUARDS

16. Extension cords are not recommended for use with this product.
17. **NEVER** carry the appliance by the power cord or yank it to disconnect from electrical outlet; instead grasp the plug and pull to disconnect.
18. **Do NOT** remove the brew basket while the appliance is brewing. Scalding may occur if it is removed during brewing cycle.
19. **Do NOT** operate your appliance in an appliance garage or under a wall cabinet. When storing in an appliance garage always unplug the unit from the electrical outlet. Not doing so could create a risk of fire, especially if the appliance touches the walls of the garage or the door touches the unit as it closes.
20. **Do NOT** use well water; use tap, filtered, or bottled water.
21. Clogging and backing up of water and/or coffee in the filter basket can occur under any of the following conditions: The use of coffee that is too finely ground; using two or more paper filters; using a permanent filter in conjunction with a paper filter; not cleaning coffee grounds from a permanent filter; or allowing coffee grounds to spill over the filter.
22. **ALWAYS** use appliance on a dry, level surface.
23. **Do NOT** touch warming plate while the brewer is in use.
24. The carafe is designed for use with this appliance. It must never be used on a range top.
25. **Do NOT** set a hot carafe on a wet or cold surface.
26. **Do NOT** use a cracked or scratched carafe or a carafe that has a loose or weakened handle.
27. **Do NOT** clean carafe with abrasive cleansers, steel wool pads, or other abrasive material.
28. **Do NOT** place carafe in microwave.
29. **Do NOT** expose carafe to extreme temperature changes.
30. **Do NOT** drink directly from the carafe. Liquid from the carafe may be very hot.
31. **Do NOT** use the carafe to store any other type of food when not in use.

SAFETY INSTRUCTIONS & IMPORTANT SAFEGUARDS

32. Ensure that the carafe is completely empty before starting a cleaning or brewing cycle. Starting a cycle with water or coffee in the carafe will cause an overflow.
33. To prevent illness from bacterial growth in the appliance, follow all cleaning instructions in the Keep It Clean section of this user guide.
34. Allow unit to cool before removing brew basket, water reservoir, or filters or before surface cleaning.
35. Clean the system on a weekly basis.
36. **Do NOT** use single-serve espresso capsules or K-Cup® pods other than those intended for this appliance. If the capsule or pod does not fit, do not force it into the appliance.

SAVE THESE INSTRUCTIONS FOR HOUSEHOLD USE ONLY

SAFETY INSTRUCTIONS & IMPORTANT SAFEGUARDS

WARNING: This appliance has a polarized plug (one blade is wider than the other). This plug is intended to fit into a polarized outlet only one way. If the plug does not fit fully into the outlet, reverse the plug. If it still does not fit, contact a qualified electrician. Do not attempt to modify the plug in any way or force it into the outlet. This could result in injury or electric shock.

Short Cord Instructions

A short power-supply cord is provided to reduce the hazards of entanglement or tripping over a longer cord. Do not use an extension cord with this product.

Power Cord Safety Tips

1. Never pull or yank on the cord or the appliance.
2. To insert the plug, grasp it firmly and guide it into the outlet.
3. To disconnect the appliance, grasp the plug and remove it from the outlet.
4. Never use the product if the power cord shows signs of abrasion or excessive wear. Contact Chefman Customer Support for additional guidance and support.
5. Never wrap the cord tightly around the appliance, as this could place undue stress on the cord where it enters the appliance and cause it to fray and break.

DO NOT OPERATE THE APPLIANCE IF THE POWER CORD SHOWS ANY DAMAGE OR IF THE APPLIANCE WORKS INTERMITTENTLY OR STOPS WORKING ENTIRELY.

Do not place the appliance on a stovetop or any other heatable surface, even if stovetop is not on. Doing so is a fire hazard.



Before First Use

1. Remove all packaging materials and check to ensure that all parts and accessories are accounted for. Read all stickers and remove ones that are not permanent.
2. Remove and hand wash the water tank, milk reservoir, portafilter, portafilter baskets, measuring scoop | tamper, espresso drip tray, drip coffee filter basket, filter holder, K-Cup® adapter, and carafe with a mild detergent and water. Rinse and dry well.
3. Remove the red plug from the back of the coffee maker, then set the water tank in its base, making sure it's fully seated. (The red plug must be removed before the water tank can be installed.)
4. Set the clock: Press the Clock **SET** button and the time display will blink. Use the +/- buttons to adjust hours. Press the **MIN** button, then use the +/- buttons to adjust minutes. (You can hold + and – down to scroll faster through the numbers.) Press the **AM | PM** button to toggle between the two settings. Once you've set the correct time, press the Clock **SET** button again to confirm. **NOTE:** The clock must be set to the current time to use the Delay Brew function (see p. 21).

How to Make Hot Coffee Drinks

The unit powers up immediately upon plugging in. After 5 minutes of inactivity, it will go into sleep mode (all lights off except the clock). To wake it up, tap anywhere on the control panel.

The unit begins preheating immediately after being powered on. If you try to run a brewing cycle before the unit is fully preheated (for instance, immediately after powering on), the **Preheat** light will illuminate. Once the appliance is fully preheated, the **Preheat** light will turn off and brewing cycles can begin.

The control panel has two sides: espresso drinks are controlled and dispensed on the left, and drip coffee and single-serve (K-Cup®) coffee on the right. Pressing any of the primary buttons (**ESPRESSO**, **FROTH**, **CLEAN**, **COFFEE**, **HOT WATER**, or **KEEP WARM**) will illuminate only the buttons related to customizing that function. Appropriate accessories must always be in place in order to brew a particular type of coffee. For instance the K-cup® adapter must be correctly inserted when you press **COFFEE** to brew a single-serve cup.

How to Brew Single-Serve Coffee

1. Fill the water tank with water. You can do this either while it is installed on the unit or remove it to fill under a faucet. Return the tank to the unit, making sure it is fully seated, and close the lid.

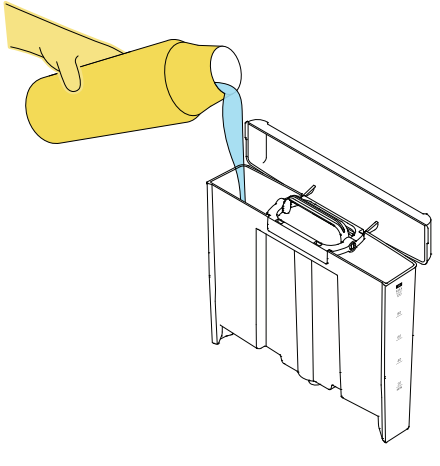

2. With the unit powered on, select **COFFEE** on the right side of the control panel. Place the K-Cup® adapter in the coffee filter holder with the word "FORWARD" facing towards you. The **Single** light will illuminate on the control panel; if it doesn't, make sure the adapter is fully seated in the filter holder. Place a K-Cup® into the center pocket of the adapter. Close the brew chamber lid. **WARNING:** If the K-Cup® adapter is not inserted correctly and not detected, the unit will brew in cups, rather than oz, which could cause overflow.

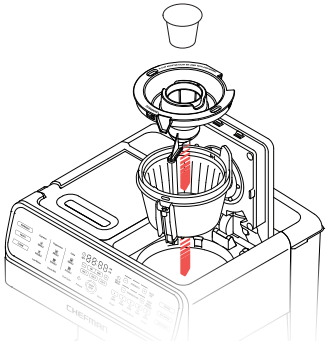

3. Place a single-serve cup below the brew head on the right side of the unit. For smaller cups, you can flip down the raised platform to bring the cup closer to the brew head for reducing coffee splatter.
4. If desired, press the **OVER ICE** button. Select your preferred size (8, 10, or 12 oz) and adjust the temperature and strength, if desired, using the + and – buttons. Press **START | STOP**.

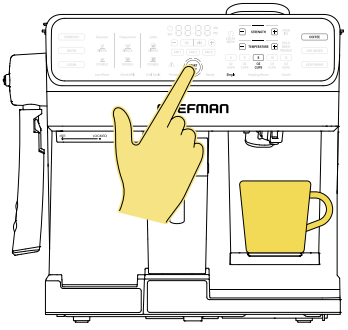

5. When the brewing is finished, the **Ready** light will illuminate on the control panel. To steam milk for your coffee, insert the filled milk container, rotate the nozzle over the cup and press the **FROTH** button, then **START | STOP**.

How to Brew Drip Coffee (Carafe)

1. Fill the water tank with water and return it to the unit. If the K-Cup® adapter was used previously, pulling it out will also pull out the drip coffee filter holder; be sure to separate them.
2. Place EITHER the included reusable mesh filter basket or a paper filter in the filter holder. **CAUTION:** Do not use the reusable filter together with a paper filter; using them together may cause a backup of hot water when brewing.

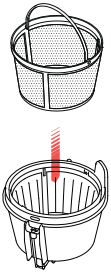

3. Add the desired amount of ground coffee to the filter. See the chart on p. 14 for our recommended amount of coffee per cup, but adjust according to your taste.

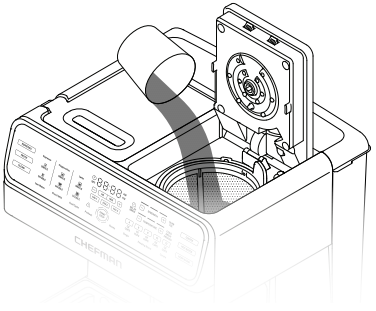

4. Slide the carafe (with the lid closed) onto the heating plate. The **Carafe** light will blink if the carafe is not properly seated.

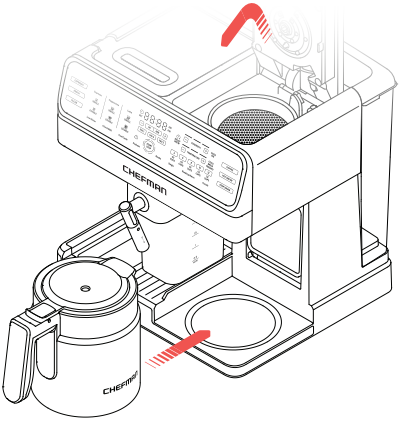

5. With the unit powered on, select **COFFEE** on the right side of the control panel. Select your preferred amount to brew (4, 6, 8, 10, or 12 cups) and adjust the temperature and strength, if desired, using the + and – buttons. To turn on the Keep Warm function, press the **KEEP WARM** button, then press **START | STOP**.

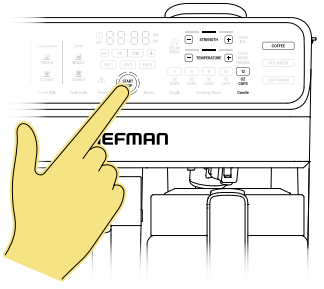

6. When brewing ends, the **Ready** light will illuminate. There is a pause-and-serve feature, which will immediately pause brewing when the carafe is removed from the heating plate. (Keep in mind that pouring a cup mid-brew can alter the strength and flavor of the finished brew.) If the carafe is not returned to the heating plate after 2 minutes, brewing will turn off.

Recommended Amounts of Ground Coffee

Cups to be Brewed	**Heaping scoops of ground coffee** (using included scoop)	**Grams**
4	3-4	30-40
6	4-5	40-50
8	6-7	60-70
10	7-9	70-90
12	9-11	90-110

How to Make Hot Espresso Drinks

How to Brew Espresso

The specially designed portafilter can be used with either ground coffee or with original-style Nespresso® (or Nespresso®-compatible) capsules. Capsules are prepackaged doses of coffee grounds in a disposable capsule, typically made from plastic or aluminum with a foil top.

1. Select one of the two portafilter baskets and drop it into the portafilter. Use basket 1 for a single shot of espresso. Use basket 2 for for a double dose of espresso in a smaller size drink.
2. Use the measuring scoop to fill the basket with finely ground espresso (approximately 1 level scoop/8 g for a single shot and 2 level scoops/15 g for a double shot; do not overfill).
3. Using the tamper end of the measuring scoop, press on the grounds firmly and evenly. Be sure the surface is smooth and flat. Clean any excess grounds from the portafilter rim to ensure a proper fit in the brew head.

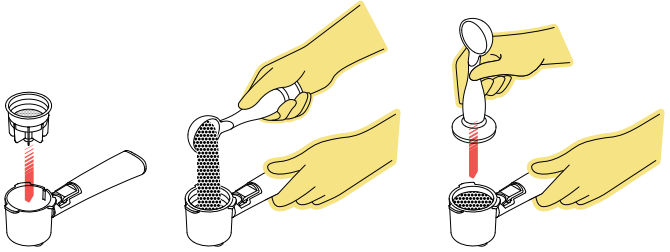

4. Alternatively, to brew with a Nespresso®-style capsule, place it in the capsule adapter and screw the two pieces together. **NOTE:** Capsules are best for single shots. Brewing a capsule as a double yields a much weaker flavor. Do NOT use the Vertuo®-style pods, which are flatter, as this unit only works with capsules.

For Either Ground or Capsule Espresso

1. With the unit powered on, select **ESPRESSO** on the left side of the unit.
2. Position the portafilter beneath the brew head with its handle pointing left. Insert the portafilter up into the brew head, lining up the handle with the the word **INSERT** on the brew head.

3. Slowly turn the handle to the right until it's aligned with the word **LOCKED;** you'll feel some resistance once it is almost in place.

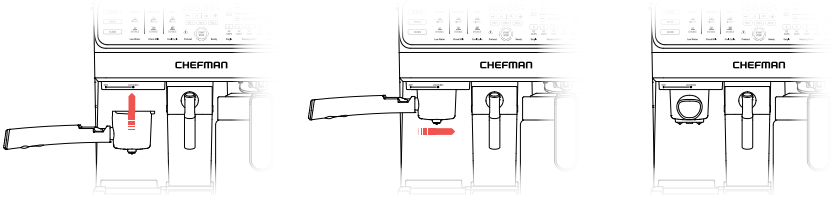

4. Place a heatproof cup or demitasse on the metal coaster over the drip tray. **NOTE:** You can flip over the metal coaster of the drip tray to change the height of the cup under the brew head.
5. Select a **SINGLE** or **DOUBLE** Espresso by pressing the appropriate button, then press **START | STOP**.

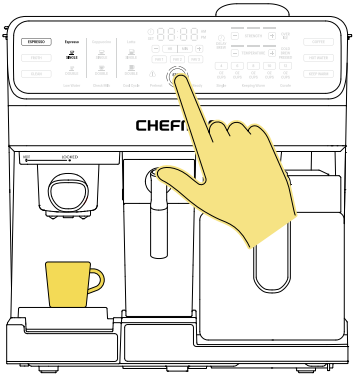

6. When brewing is complete, the **Ready** light will illuminate. Remove from platform and enjoy! Wait at least 60 seconds after brewing, then remove the portafilter and let it cool. To empty the spent coffee grounds, flip up the portafilter basket retention clip to partially cover the lip of the basket. Press the clip with your thumb to hold the basket in place as you tap the portafilter against the side of a waste bin.

Espresso Drink Volumes

Selected Size	Approx. Volume
Single	30 ml
Double	60 ml

How to Make Hot Cappuccino or Latte Drinks

How to Make a Cappuccino or Latte

With its integrated milk frother, the Coffee Station brews creamy lattes and foam-topped cappuccinos with the touch of one button.

1. With the unit powered on, select **ESPRESSO** on the left side of the unit.
2. Follow the directions on p. 15 to add ground coffee or a Nespresso® capsule to the portafilter, and install the portafilter under the brew head.
3. Remove the milk reservoir lid and fill with milk between the **MIN** and **MAX** lines.

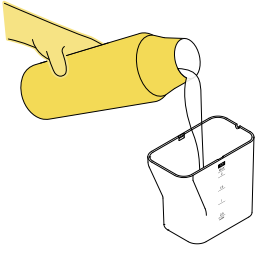

4. Place the lid back on the reservoir and slide it into the unit, with the tube facing forward. (If the reservoir is not properly inserted, the **Check Milk** light will illuminate.)

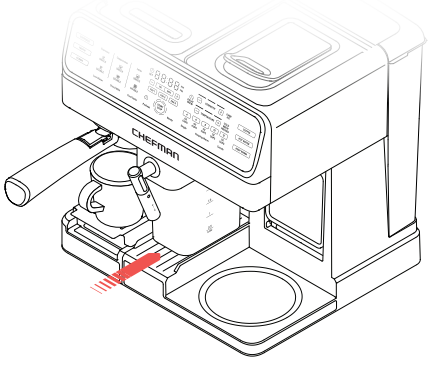

5. Place a heatproof cup or mug on the metal coaster over the drip tray. **NOTE:** Be sure to use a large mug, especially for a double latte (which can yield as much as 285 ml). You can flip over the metal coaster of the drip tray to change the height of the cup under the brew head.
6. Swivel the milk dispensing tube so it's positioned over the cup. If necessary, extend the metal nozzle tube to better reach the cup.
7. Select a **SINGLE** or **DOUBLE** Cappuccino or Latte by pressing the appropriate button, then press **START | STOP**.

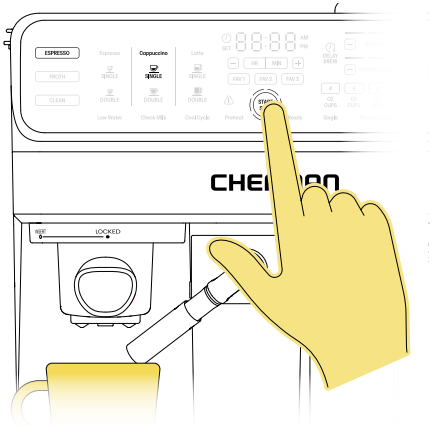

8. The unit will first froth the milk and dispense into the cup, then brew the espresso for your drink. When the unit is finished, the **Ready** light will illuminate.
9. When you are finished making cappuccinos or lattes, we recommend immediately running a quick Clean cycle to clean the frothing wand (see p. 24). If there is milk left in the reservoir, remove the reservoir and refrigerate it for future use. Do not store milk in the reservoir for more than 1 week, as the container is not air-tight. Before refilling, always clean the reservoir and use fresh milk.

Cappuccino and Latte Drink Volumes

Selected Size	Approx. Volume
Single Cappuccino	150 ml
Double Cappuccino	225 ml
Single Latte	175 ml
Double Latte	285 ml

How to Make Cold Coffee Drinks

Over Ice

Available for both single-serve and carafe coffee, the Over Ice function brews smaller volumes (see chart below) at full strength to compensate for ice melt. Temperature is not adjustable. To use: Set up the unit for either carafe or single-serve mode with an ice-filled carafe or glass. Press the **OVER ICE** button, choose a size, and press **START | STOP**. There are long pauses with this function, so be sure the **Ready** light is lit before removing the cup or carafe.

Cold Brew Coffee

Available for both single-serve and carafe coffee, this function brews cool, slow, smaller volumes to extract maximum flavor with minimal ice melt. To use: Set up the unit for either carafe or single-serve mode and select your preferred size (see chart below). Place a mug under the hot water outlet. Press **COFFEE**, then **Cold Brew.** In most cases, the **Cool Cycle** light will blink, meaning the unit needs to cool the water in the boiler (see p. 21). Press **START | STOP**. About 5 oz of water will dispense into the mug. After the **Cool Cycle** light turns off, remove the mug, then place an ice-filled carafe or glass on the platform and press **START | STOP** again.

Over Ice | Cold Brew Recommended Amounts and Yields

Single		
Selected Button	**Amount to Use**	**Actual Yield**
8 oz	1 K-Cup	4 oz
10 oz	1 K-Cup	5 oz
12 oz	1 K-Cup	6 oz

Carafe		
Selected Button	**Amount to Use**	**Actual Yield**
4 cups	3-4 scoops	2 cups
6 cups	4-5 scoops	3 cups
8 cups	6-7 scoops	4 cups
10 cups	7-9 scoops	5 cups
12 cups	9-11 scoops	6 cups

Cold-Pressed Espresso

This function brews espresso at a low temperature and slower rate, resulting in a smoother brew with less acidity. The volume is the same as for hot espresso (see p. 16). To use it, set up the unit for espresso brewing and set a mug on the carafe platform. Select the **SINGLE** or **DOUBLE** espresso icon, then press **Cold Pressed** on the right side of the unit. In most cases, the **Cool Cycle** light will blink (see p. 21). Press **START | STOP.** About 5 oz of water will dispense into the mug. After the **Cool Cycle** light turns off, press **START | STOP** again and the cold brewing process will begin.

Special Functions

Hot Water

The Coffee Station has a Hot Water function, perfect for dispensing one-touch hot water for tea, hot cocoa, or instant noodles. It's dispensed from an independent nozzle, completely separate from the coffee system, so you get fresh-tasting water every time, without any coffee residue. To use, place a cup (or carafe) under the coffee brew head. With the unit powered on, press **HOT WATER**, select the amount in ounces (similar to single-serve coffee), then press **START | STOP**.

Froth Milk

The unit has a milk froth-only option, which allows you to add steamed milk and foam to non-espresso coffee drinks, or to froth milk for hot chocolate or other beverages.

With the unit powered on, fill the milk reservoir and slide it into place on the unit. The **Check Milk** light will turn off.

If you're frothing milk for a just-brewed single-serve coffee, you can swivel the froth dispensing tube so it's positioned over the cup on the coffee platform. (Otherwise, hold or place a cup or pitcher under the froth dispensing tube.)

Press **FROTH**, then choose the volume of frothed milk by pressing the **SINGLE** or **DOUBLE** button. Press **START | STOP**. The unit will froth and dispense milk; approximately 70 ml for the single and 120 ml for the double. **NOTE:** If you try to run a frothing cycle before the unit is fully preheated (for instance, immediately after powering on), the **Preheat** light will illuminate. As soon as the unit has fully preheated, the frothing cycle will begin immediately.

After making the frothed milk, we recommend immediately running a quick clean cycle to clean any milk residue inside of the frother (see p. 24).

Preheating

The Coffee Station immediately begins heating water for brewing when it is powered on or woken up from sleep mode. If you press **START** on a brewing function before it has reached brewing temperature, the **Preheat** light will turn on in red. As soon as the unit is fully heated, brewing will begin automatically. Preheating usually takes 1 to 2 minutes, although certain functions, such as Cappuccino, may require further preheating.

Cool Cycle

When the Coffee Station is powered on, it immediately begins preheating the water for use. However the Cold Brew Coffee and Cold Pressed Espresso functions require cooler water. If the water in the boiler is already too hot, the **Cool Cycle** light will blink after you make one of those selections. When this happens, place a large cup or mug under the hot water outlet (on the carafe plate). **Do NOT** yet place your carafe or glass there. Press **START | STOP**, and the unit will flush about 5 oz of cool water through the boiler and into the mug. When the Cool Cycle has finished running (about 20 seconds), the light will stop blinking and the **START | STOP** button will light up. Remove the cup of water and set your carafe, glass, or espresso cup in place. Press **START | STOP** again and brewing will begin. **NOTE:** If you run a cold brew or cold pressed function immediately after waking up the unit from Sleep mode, it may bypass the Cool Cycle because the water won't already be heated.

Delay Brew

The Delay Brew function allows you to program carafe coffee to brew in the future, so you have a hot pot of coffee ready for you whenever you choose. To use it, first ensure the Coffee Station is set up to brew in Carafe mode and has the empty carafe seated on the warming plate. Press the **DELAY BREW** button; the starting time will blink. Use the + and – buttons to adjust the time you wish to begin brewing, using the **HR | MIN** button to toggle between hours and minutes. Set any additional parameters for the brew that you'd like to customize: strength, temperature, and/or volume. Press **START | STOP** to confirm. The **DELAY BREW** button will turn blue, indicating that it is programmed to brew in the future. (If the lid is open, if the carafe is missing, or if the K-Cup® adapter has been left in the brew chamber, **DELAY BREW** will continue to blink, indicating the unit is not properly set. If **DELAY BREW** is still blinking when the programmed brew time is reached, the cycle will immediately terminate without brewing.)

To cancel a programmed Delay Brew function, simply press the **DELAY BREW** button again. **NOTE:** If you want to use the Delay Brew function daily, you'll need to reset it each day, but after programming the time once, it will keep the previously programmed time.

While a Delay Brew function is programmed, you can still use the coffee maker for a single-serve K-Cup® coffee, but be sure to return the filter with grounds to the unit before the time it is set to brew.

IMPORTANT: Be sure the water tank is filled and there is coffee in the brewing chamber. The minimum water mark is 590 ml (20 oz), so if it is above that but not full enough to brew a larger pot, the unit will brew only what is there, then the **Low Water** light will illuminate, and brewing will terminate.

Keep Warm

The Keep Warm function keeps your coffee in the carafe warm for up to 2 hours. When setting up a carafe brew, the Keep Warm default is to be on for 60 minutes (the **Keeping Warm** light will be illuminated when the warming plate is on). The Keep Warm function can also be turned on manually and the duration adjusted: Press the **KEEP WARM** button, then use the + and - buttons to choose how long the warming plate will be on. At this point, you can either press any function button to save the new time and exit to Standby mode OR press the **START | STOP** button to start the warming plate with the new time. The warming plate will automatically turn off when the set time has expired. To turn Keep Warm off at anytime, press the **KEEP WARM** button. Once the unit has finished brewing, you can modify the amount of time remaining for the plate to be on by holding down the **KEEP WARM** button for 3 seconds. **CAUTION:** Be sure to place only heatproof items on the warming plate.

How to Program Favorites

Using the Favorites function, you can save up to 3 favorite brew cycles on your Coffee Station for one-touch brewing of any style of coffee. (Though favorites can be used for espresso drinks, these are already one-touch programs, so it may be more beneficial to use the favorites for carafe and single-serve styles.)

To program a favorite, first set all your parameters, as desired: brew strength, temperature and volume. You can even program a Delay Brew setting with your chosen start time. (Delay Brew is already a one-touch function, but this lets you have multiple Delay Brew times pre-set.) Press and hold **FAV 1, FAV 2**, or **FAV 3** for 3 seconds. The unit will beep to confirm that the settings are saved.

To use a saved favorite, simply press that button. Ensure that the unit is filled with water and coffee, and the appropriate cup or carafe is in place, then press **START | STOP**.

Having Trouble?

Problem	Possible Cause	Solution
Error alert light ⚠ plus an error code appears on screen.	1. ⚠ + E01X – Overheated temp. sensor 2. ⚠ + E02 – Temp. sensor malfunction 3. ⚠ + E03 – Low water flow in a pump	1. Unplug unit and let it cool down for a few minutes before restarting. 2. Unplug, then plug in and turn back on. 3. Unplug, refill water tank and turn back on. In all cases, if the problem persists, contact customer service.
Preheat light comes on when trying to brew.	The unit is not fully preheated.	Wait about 2 minutes and light should turn off, then brewing functions will become available.
When trying to brew K-Cup® pods, the unit is stuck in Carafe mode. (unit displays volume in cups rather than oz.)	The K-Cup® adapter is not fully seated.	Remove and reinsert the K-Cup® adapter, making sure the adapter is sitting flush over the filter basket.
Brewed coffee overflowing from filter basket.	Both the reusable filter and a paper filter were used.	Use only the reusable mesh filter OR a paper filter, not both together.
Carafe light is blinking.	Carafe is missing or not fully seated on the heating plate.	Place carafe on the heating plate.
Espresso not flowing out of the brew head.	1. Coffee grind is too fine. 2. Too much coffee in filter basket. 3. Coffee has been tamped down too much.	1. Use a coarser grind. 2. Add less coffee to the portafilter. 3. Refill filter and use less pressure when tamping.
Espresso leaking out from around the portafilter.	1. Portafilter not rotated to full lock position. 2. Coffee grounds were left around the filter basket rim. 3. Too much coffee in filter basket.	1. Rotate portafilter to locked position (handle aligns with “Locked”). 2. Wipe off rim. 3. Fill with less coffee.
Check Milk lights up when brewing a latte or cappuccino.	Milk reservoir is missing or not fully seated on the unit.	Remove and reinsert the milk reservoir.
Milk is not frothy or not coming out of the dispensing tube.	1. Milk is not cold enough. 2. Froth dispensing tube is blocked. 3. Internal parts of frother need cleaning.	1. Chill milk and milk reservoir. 2. Follow the instructions on p. 24–25 to clean the milk reservoir and the froth dispensing tube. 3. Follow the instructions on p. 26–27 to clean frother internal parts.
Delay Brew light is blinking.	1. The lid is open. 2. The carafe is missing. 3. The K-Cup® adapter has been left in the brew chamber.	1. Close the lid. 2. Seat the carafe on warming plate. 3. Remove the adapter from the chamber and make sure coffee-filled filter is in place.
Why is my cold brew or over-ice coffee not cold?	While Cold Brew/Pressed functions are brewed at a lower temperature to minimize ice melt, they do not come out COLD.	Brew these styles of coffee directly into an ice-filled cup, carafe, or glass. Depending on what you add (such as cold milk), you may also want to add more ice after brewing.

Keep It Clean

Regular maintenance will keep your Coffee Station in excellent working order. Daily maintenance is quick and easy; for more periodic tasks refer to this chart.

Task	Frequency	See p.
Wash any accessories used.	Daily	24
Run a quick clean cycle on the milk frother wand	Immediately after use	24
Remove and refrigerate milk reservoir (no need to empty)	Immediately after use	24
Wipe down exterior housing	Daily	24
Empty and wash water tank	Weekly	25
Empty and wash milk reservoir	Weekly (if used)	25
Flush of frother system	Weekly (if used daily)	25
Deep clean of frother internal parts	Every 30-60 Days (depending on frequency of use)	26-27
Descaling coffee, espresso, and hot water systems	Every 100 cycles (50 for hot water)	28-29

After Each Use

1. If the milk frother is used, it's important to run a frother Quick Clean cycle immediately to clear out the frothing tube (unless you're making a second frothed-milk drink): Place an empty 170 ml (6 oz) or larger cup under the milk tube, then press **CLEAN,** then **SINGLE**, then **START | STOP.** The unit will flush a small amount of hot water through the frothing tube to purge out any remains of milk in the tube.
2. Clean any accessories used—carafe, filter basket and filter holder, K-cup® adapter, rubber trivet, portafilter and portafilter baskets, espresso coaster and drip tray—with warm, soapy water, then rinse and dry thoroughly. These accessories are also top-rack dishwasher safe, except for the portafilter and the portafilter baskets. (Remove the lid of the carafe before putting in the dishwasher.)
3. If there is milk left in the reservoir, remove the reservoir and refrigerate it for the next use (empty and wash it once a week; see p. 25).
4. Wipe down the Coffee Station's housing with a soft, damp cloth. Do not use abrasive sponges or cleaners, which can damage the finish.
5. The clean, dry portafilter can be hung on the left side of the unit for storage. Simply pull the round cover off the storage notch and insert the portafilter in the notch. The round cover can be kept in the accessory storage tray.

Cleaning the Milk and Water Reservoirs (weekly)

1. Empty the milk reservoir (discard any milk that's been in there for a week). Wash the reservoir and lid in warm, soapy water, then rinse and dry thoroughly before reassembling. The reservoir is top-rack dishwasher safe, but the lid can't be effectively cleaned in the dishwasher.
2. Remove the water tank from the unit and wash it in warm, soapy water; rinse and dry thoroughly. Return the tank to the unit. Empty the water tank before any long periods of nonuse.

Milk Frother Internal Flush (weekly)

1. After emptying and cleaning the milk reservoir, fill it with water and insert it into the unit.
2. Place a 295 ml (10 oz) cup or larger under the froth dispensing tube.
3. From Standby mode, press **CLEAN** then **FROTH**. Select the **DOUBLE** button, then press **START | STOP**. The unit will flush the entire frothing system with water, dispensing it into the cup.
4. When the cycle finishes, the unit will enter Standby mode. Empty the cup and milk reservoir.-

Frother Deep Clean (30-60 days)

Over time, milk residue can build up in the frother's internal parts, requiring a deep cleaning. Depending on frequency of use, we recommend doing this deep cleaning every 1 to 2 months, or whenever you notice a decrease in the amount or quality of the milk foam.

1. Remove the milk reservoir from the unit.
2. Remove the lid assembly and transfer any remaining milk to another container and refrigerate.
3. Twist the froth dispensing tube in either direction until it's pointing

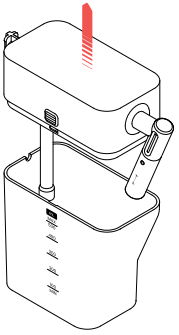

straight up, then pull away from the lid. Twist the pipe at the other end of the lid (the steam adapter) counter-clockwise and pull away. Remove the suction straw by simply pulling off.

4. Turn the lid over. Rotate the

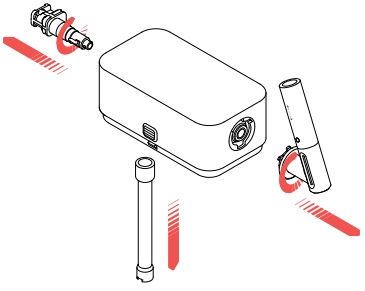

dial on the lid to the unlocked position, then remove the dial and set it aside.

5. Separate the two pieces of the

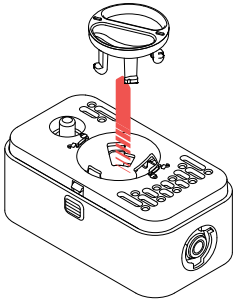

lid, and then lift out the tubing assembly inside.

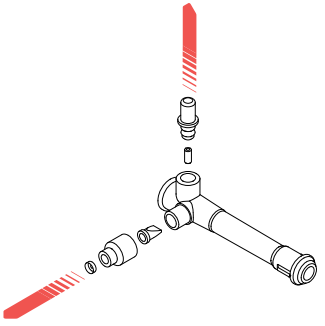

6. Gently pull outward on the froth tubing assembly to separate all the small silicone, plastic, and metal parts.

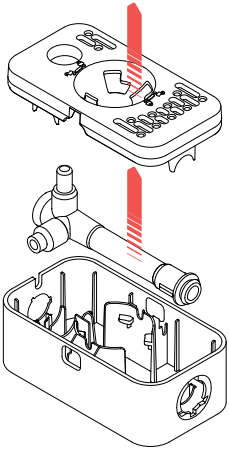

7. Pull the metal sleeve off the froth dispensing tube.

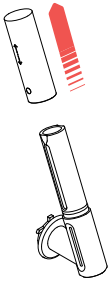

8. Transfer all of these small parts to a bowl of warm soapy water and wash by hand.
9. Transfer to a bowl of fresh water and rinse thoroughly. (We recommend washing in bowls so as not to lose any parts.)
10. Let the parts dry, then reassemble by pushing them back into place as shown in the diagrams.
11. Snap the upper and lower lid pieces together, then put the locking dial in place and turn to lock it.
12. Reinsert the froth dispensing tube and suction straw into the lid and return the lid to the milk reservoir.

Every 100 Uses: Descaling the brewing systems

Calcium buildup (or "scale"), caused over time by minerals commonly found in water, can adversely affect brewing and shorten the life of your appliance. After the Coffee or Espresso system runs 100 times (or 50 times for Hot Water) the Coffee Station will notify you to run a descaling cycle on that system: in Standby mode the **CLEAN** button will blink. Press the **CLEAN** button and the system that needs descaling will illuminate. If you have very hard water, the unit may require more frequent descaling; we recommend running a descale cycle when you notice an increase in the time required to brew espresso or when the drip-coffee cycle is especially slow or noisy.

To descale a system:

1. Prepare a commercial descaling solution according to package directions or mix a 50/50 solution of water and white vinegar. Add the solution to the water tank; the amount needed depends on which system you're cleaning, see chart on the following page.
2. With the unit powered on, press **CLEAN** on the control panel. The **CLEAN** button will blink and the system that needs descaling (**ESPRESSO**, **COFFEE**, or **HOT WATER)** will illuminate in blue.
3. Set an empty receptacle (see chart on the following page) under the brew head/water outlet of whichever system you are cleaning. If descaling the espresso system, insert and lock the portafilter (no basket) in place. If descaling the coffee system, remove the K-cup® adapter but keep the filter holder in place.
4. Press **START | STOP** to start the cleaning cycle. The unit will run the descaling solution through the tubing of the selected system to dissolve and flush out the calcium buildup.
5. When the cleaning function ends, the unit will return to standby mode. Empty the receptacle of cleaning solution and return it to under the brew head/outlet.
6. Empty the water tank and refill to the **MAX** fill line with fresh water. Run the cleaning cycle twice more with fresh water, emptying the receptacle and refilling the tank with clean water in between, to flush the unit of descaling solution.

Descaling Specifics

Refer to this chart to determine how much descaling solution to add to the reservoir and what size receptacle to use for the discard.

Brewing System	Descaling Solution Amount	Receptacle
Espresso	770 ml (26 oz)	Heatproof 475 ml (or larger) liquid measuring cup
Coffee	1630 ml (55 oz)	Use carafe
Hot Water	830 ml (28 oz)	Use carafe
All Three Systems	2.6 L (89 oz)	Carafe under drip coffee brewhead AND 475 ml measuring cup under espresso brewhead.

NOTE: Though the Coffee, Espresso, and Hot Water systems each need to be descaled separately, you can do them one after the other if you prefer, even if they're not all due for descaling yet. We recommend cleaning all of them with the descaling solution, then doing two rinse cycles on all. The cycle counter will be reset to 0 for all three systems after doing this, even if a descaling was not already due.

Notes

Notes

Terms & Conditions

Limited Warranty
RJ Brands, LLC d/b/a Chefman® offers a limited 1-year Warranty (the "Warranty") available on sales through authorized distributors and retailers only. Please note that this Warranty becomes valid from the date of delivery and that the Warranty is nontransferable and applies only to the original purchaser.

This Warranty is void without proof of purchase within the United States and Canada. Please be aware that this Warranty supersedes all other warranties and constitutes the entire agreement between the consumer and Chefman®. Any changes to the Terms and Conditions of this Warranty must be in writing, signed by a representative of Chefman®. No other party has the right or ability to alter or change the Terms and Conditions of this Warranty.

We may ask you to please submit, via email, photos and/or video of the issue you are experiencing. This is to help us better assess the matter and possibly offer a quick fix. Photos and/or video may also be required to determine Warranty eligibility.

We encourage you to register your product. Registering can make the Warranty process easier and can keep you informed of any updates or recalls on your product. To register, follow the directions on the Chefman® Warranty Registration page in the Chefman® User Guide. Please retain your proof of purchase even after registering. In the event that you do not have proof of your purchase date, we may declare your Warranty void or we may, at our sole discretion, apply the date of manufacture as the purchase date for purposes of this Warranty.

What the Warranty Covers

- **Manufacturer Defects**
  Chefman® products are warranted against defects in material and workmanship, under normal household use, for a period of 1 year from the date of delivery when used in accordance with the directions listed in the Chefman® User Guide. If your product does not work as it should, please contact Customer Support at support@chefman.com so that we may assist you.

This Warranty Does Not Cover

- **Misuse**
  Damage that occurs from neglectful or improper use of products, including, but not limited to, damage that occurs as a result of usage with incompatible voltage, regardless of whether the product was used with a converter or adapter. See Safety Instructions in the Chefman® User Guide for information on proper use of product;

- **Poor Maintenance**
  General lack of proper care. We encourage you to take care of your Chefman® products so that you may continue to enjoy them. Please see Keep It Clean directions in this Chefman® User Guide for information on proper maintenance;

- **Commercial Use**
  Damage that occurs from commercial use;

- **Normal Wear and Tear**
  Damage or degradation expected to occur due to normal use over time;

- **Altered Products**
  Damage that occurs from alterations or modifications by any entity other than Chefman® such as the removal of the rating label affixed to the product;

- **Catastrophic Events**
  Damage that occurs from fire, floods, or natural disasters; or

- **Loss of Interest**
  Claims of loss of interest or enjoyment.

For product information, please visit us at Chefman.com.

EXCEPT WHERE SUCH LIABILITY IS REQUIRED BY LAW, THIS WARRANTY DOES NOT COVER, AND CHEFMAN® SHALL NOT BE LIABLE FOR, INCIDENTAL, INDIRECT, SPECIAL, OR CONSEQUENTIAL DAMAGES, INCLUDING WITHOUT LIMITATION, DAMAGE TO, OR LOSS OF USE OF THE PRODUCT, OR LOST SALES OR PROFITS OR DELAY OR FAILURE TO PERFORM THIS WARRANTY OBLIGATION. THE REMEDIES PROVIDED HEREIN ARE THE EXCLUSIVE REMEDIES UNDER THIS WARRANTY, WHETHER BASED ON CONTRACT, TORT OR OTHERWISE.

Warranty Registration

What do I need to register my product?

- Contact Information
- Model Number (see example below)
- Proof of Purchase (online confirmation, receipt, gift receipt)
- Date Code (see example below)
- Access Code (see example below)

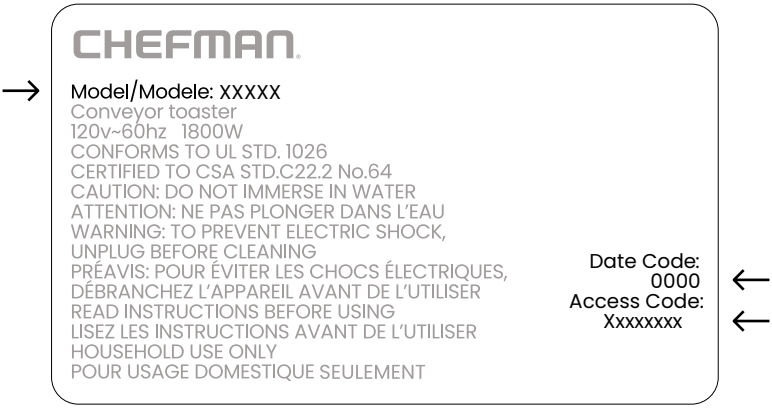

NOTE: Label depicted here is an example.
Please see label on your product for actual model/date code/access code.

How do I register my product?

All you need to do is fill out a simple Chefman® registration form.
You can easily access the form in one of the two ways listed below:

- Visit Chefman.com/register.
- Scan the QR code to the right to access site.

CHEFMAN

Coffee Station Pro

10-in-1 Beverage Center

RJ54CSV2SERIESUG061526

Chefman® is a registered trademark of RJ Brands, LLC.

K-Cup® is a registered trademark of Keurig Green Mountain, Inc.

Nespresso® is a registered trademark of Nestlé Nespresso S.A.

The Chefman® Coffee Station is not affiliated with or sponsored by Keurig Green Mountain, Inc. or Nestlé Nespresso S.A.