CHEFMAN

7-Quart Digital Slow Cooker



RJ15-7-SS-D

Get to Know Your Slow Cooker

1. Lid handle
2. Tempered glass lid
3. Ceramic cooking insert
4. Base handles (2)
5. Base
6. Nonskid feet (partially shown)
7. Control panel

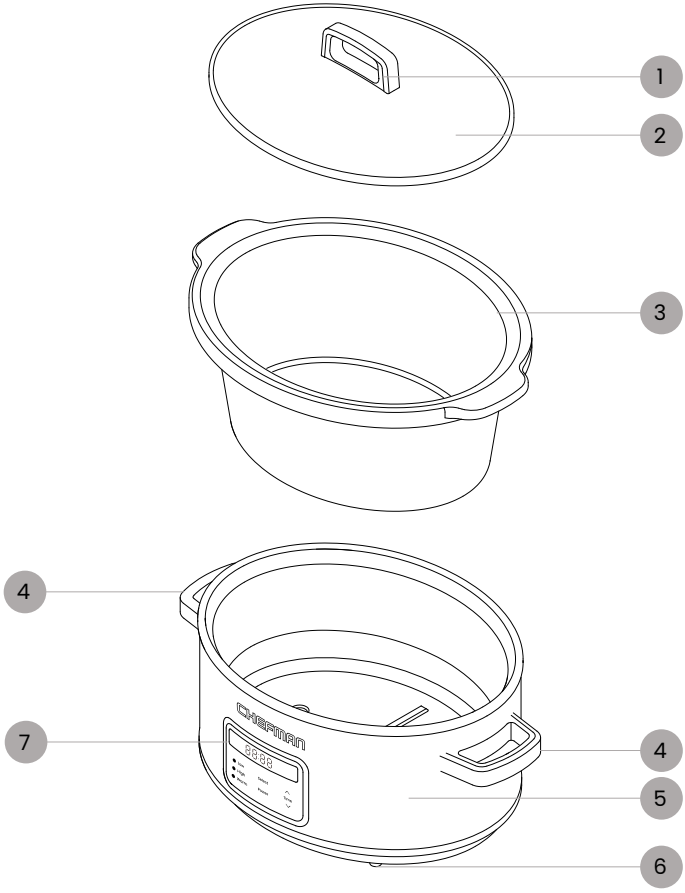

READ ALL INSTRUCTIONS BEFORE USE

For your safety and continued enjoyment of this product, always read the instruction manual before using.

Control Panel

1. Time display
2. Time adjustment buttons
3. Cooking mode Select button
4. Power button
5. Cooking mode indicator lights

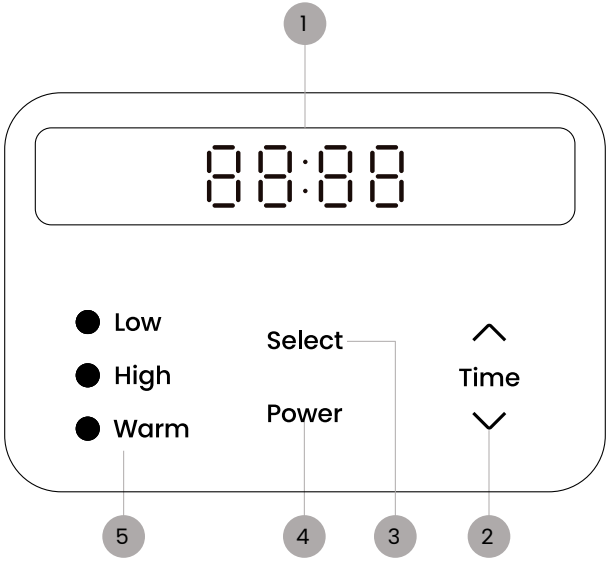

Handling of Slow Cooker Parts
Like any stoneware, the cooking insert may break or crack if not properly handled. Refer to the chart below for proper handling of the cooking insert and other slow cooker parts.

Part	Stovetop Safe	Oven Safe	Microwave Safe	Dishwasher Safe
Cooking Insert	No	Yes, but not in the broiler	Yes	Yes
Lid	No	No	No	Yes
Base	No	No	No	No

SAFETY INSTRUCTIONS & IMPORTANT SAFEGUARDS

WARNING: When using electrical appliances, basic safety precautions should always be followed, including:

1. Read all instructions.
2. **Do NOT** touch hot surfaces. Use handles or knobs.
3. To protect against electric shock **do NOT** immerse cord, plugs, or unit body in water or other liquid.
4. Close supervision is necessary when any appliance is used by or near children.
5. Unplug from outlet when not in use and before cleaning. Allow to cool before putting on or taking off parts, and before cleaning the appliance.
6. **Do NOT** operate any appliance with a damaged cord or plug, or after the appliance malfunctions or has been damaged in any manner. Contact Chefman Customer Support for examination, repair, or adjustment.
7. The use of accessory attachments not recommended by Chefman may cause injuries.
8. **Do NOT** use outdoors.
9. **Do NOT** let cord hang over edge of table or counter, or touch hot surfaces.
10. **Do NOT** place on or near a hot gas or electric burner, or in a heated oven.
11. Extreme caution must be used when moving an appliance containing hot oil or other hot liquids.
12. Always attach plug to appliance first, then plug cord in the wall outlet. To disconnect, turn any control to OFF, then remove plug from wall outlet.
13. **Do NOT** use appliance for other than intended use.
14. Avoid sudden temperature changes, such as adding refrigerated foods into a heated pot.
15. Intended for countertop use only.
16. **WARNING:** Spilled food can cause serious burns. Keep appliance and cord away from children. Never drape cord over edge of counter, never use outlet below counter, and **do NOT** use any long, detachable power-supply cord or extension cord.

SAFETY INSTRUCTIONS & IMPORTANT SAFEGUARDS

17. The manufacturer does not recommend using this machine in countries that do not support 120V AC even if a voltage adapter, transformer, or converter is in use.

SAVE THESE INSTRUCTIONS FOR HOUSEHOLD USE ONLY

WARNING: This appliance has a polarized plug (one blade is wider than the other). To reduce the risk of electric shock, this plug will fit in a polarized outlet only one way. If the plug does not fit the outlet perfectly, reverse the plug. If it should still not fit, contact a qualified electrician. Do not modify the plug in any way.

Short Cord Instructions

1. A short, detachable power cord is provided to reduce the risk resulting from becoming entangled in or tripping over a longer cord.
2. **WARNING:** Do not use an extension cord with this product. Serious burns may result from the slow cooker being pulled off a countertop. Do not allow the cord to hang over the edge of the counter where it may be grabbed by children or become entangled with the user.

SAFETY INSTRUCTIONS & IMPORTANT SAFEGUARDS

Power Cord Safety Tips

1. Never pull or yank on the cord or the appliance.
2. To insert the plug, grasp it firmly and guide it into the outlet.
3. To disconnect the appliance, grasp the plug and remove it from the outlet.
4. Never use the product if the power cord shows signs of abrasion or excessive wear. Contact Chefman Customer Support for additional guidance and support.
5. Never wrap the cord tightly around the appliance, as this could place undue stress on the cord where it enters the appliance and cause it to fray and break.

DO NOT OPERATE THE APPLIANCE IF THE POWER CORD SHOWS ANY DAMAGE OR IF THE APPLIANCE WORKS INTERMITTENTLY OR STOPS WORKING ENTIRELY.



California Proposition 65:
(Applicable for California Residents only)
WARNING: Cancer and Reproductive Harm
www.P65Warnings.ca.gov

Do not place the appliance on a stovetop or any other heatable surface, even if stovetop is not on. Doing so is a fire hazard.



How to Use the Slow Cooker 

Before First Use

1. Remove all packaging materials from inside and outside the unit, and check to ensure that all parts are accounted for.
2. Read and remove any stickers on the slow cooker except for the rating label, which should remain on the unit.
3. Wipe down the interior and exterior of the base with a damp cloth. Wash the cooking insert and lid with warm, soapy water and dry thoroughly.

IMPORTANT: During the first few minutes of initial use, you may notice smoke and/or a slight odor. This is normal and should quickly dissapear. It will not recur after the unit has been used a few more times.

How to Cook in the Slow Cooker

The slow cooker allows for true hands-off cooking. Just add your ingredients, set the temperature, and come back in a few hours to a ready-to-eat meal.

1. Prepare your ingredients for cooking.
2. Place the slow cooker on a hard, flat surface away from other sources of heat. Lower the cooking insert into the base.
3. Add the food to the cooking insert. Make sure the insert is at least one-quarter full and no more than three-quarters full. (See “Cooking Tips” starting on p. 9 for more information on how to arrange foods in the insert and when to add certain ingredients for optimal results.) Place the lid on the slow cooker.
4. Plug in the unit and press **Power** to turn it on. Use the **Select** button to choose your desired cooking cycle: High or Low. For most foods, the end result will be the same whether cooked on Low or High (Low just takes longer). Alternatively, you can select Warm if you are adding hot, already-cooked food to the pot and just want to keep it warm, for instance, for serving on a buffet.
5. If desired, use the **Time** adjustment buttons to increase or reduce the time, from 30 minutes to 24 hours. The unit will begin cooking automatically.
6. Let the unit cook for the duration of the selected cycle. When the cycle is complete, the unit will automatically switch to Warm mode. Always check foods for doneness according to current food safety guidelines before serving.

7. To serve, carefully lift the lid. You may leave the cooking insert in the base or remove it. Use potholders when handling the insert, and place it on a heatproof surface.
8. **CAUTION:** Hot steam will escape when the lid is removed and can potentially cause burns. Keep away from the steam.
9. When the slow cooker enters Warm mode (whether automatically after a cooking cycle, or manually selected by you), it will stay in Warm mode for 1 hour, or until turned off. However, the duration of Warm mode can be adjusted just like the cooking modes.
10. When finished, press **Power** to turn the slow cooker off, unplug it, and let it cool completely before cleaning.

Cooking Tips

- The important difference between High modes and Low modes is how long they take to bring food to a simmer. Choose one of the Low cycles to cook all day (for example, during a workday). Choose a High cycle to cook in either 4 or 6 hours.
- For best results, avoid lifting the lid during cooking except to quickly add ingredients, as this causes heat to escape.
- If the cooking insert has been in the fridge, let it come to room temperature before cooking.
- For more depth and flavor, sear or brown foods in a separate pan on the stovetop before slow cooking. Ground meats should always be browned before slow cooking.
- Cut onions, potatoes, and other root vegetables into pieces no larger than 2 inches to ensure they cook through at the same rate as other ingredients. It's best to position them at the bottom and sides of the cooking insert and to place meats on top for thorough cooking.
- Liquid doesn't evaporate from a slow cooker as in a regular pot, so add only enough liquid to cover the ingredients for soups and stews. You can always add more liquid at the end of cooking if the soup or stew seems too thick.
- To decrease the amount of fat in recipes, trim as much of the visible fat as possible from meats or poultry before cooking (including poultry skin), and drain any fat after browning meat and before slow cooking.
- If using quick-cooking vegetables, such as green beans, add them during the last 30 minutes of cooking so they don't become too soft.
- If using dairy products (such as milk or sour cream), add them during the last 30 minutes of cooking, as they can break down and curdle during slow cooking.
- If adding pasta or rice, partially cook them in a separate pot of boiling water until not quite tender, then add them to the slow cooker during the last 30 minutes of cooking.
- If cooking fish, slow cook its sauce first, then add the fish and cook for 15 to 30 minutes to avoid overcooking.

- Add dried herbs and spices at the beginning of cooking and fresh herbs when cooking is complete.
- Thaw frozen foods completely before adding to the slow cooker.
- Dried beans should be soaked overnight, drained, and rinsed before slow cooking.
- Conventional cooking recipes may be adapted for the slow cooker. While individual recipes may require some experimentation, the chart below can be used as a general cooking guideline. (**NOTE:** The times listed in the chart are approximate and should only serve as a guide.)

Regular Cooking Time	**Slow Cooker Cooking Time**	
	Low	**High**
30 minutes	6-8 hours	3-4 hours
30-60 minutes	8-10 hours	5-6 hours
1-3 hours	10-12 hours	7-8 hours

Keep It Clean

1. Unplug the slow cooker and let it cool completely.
2. Wash the cooking insert and lid with a sponge and warm, soapy water. Dry thoroughly. If food residue sticks to the insert, fill it with warm, soapy water and let it soak before cleaning. Do not use abrasive cleansers or a scouring pad, as these can damage the finish. The lid and insert are also top-rack dishwasher safe.
3. To remove water spots or mineral deposits from the cooking insert, wipe with distilled white vinegar or pour a small amount into the insert and let it soak. Then wash the pot in warm, soapy water, rinse, and dry.
4. Wipe down the base with a damp cloth if necessary. Never immerse the base or plug in water or any other liquid. The base is not dishwasher safe.
5. Make sure all parts are dry before storing. To store, place the cooking insert inside the base and place the lid over the insert. Never wrap the cord tightly around the appliance; keep it loosely coiled instead.

Terms & Conditions

Limited Warranty
RJ Brands, LLC d/b/a Chefman® offers a limited 1-year Warranty (the "Warranty") available on sales through authorized distributors and retailers only. Please note that this Warranty becomes valid from the date of delivery and that the Warranty is nontransferable and applies only to the original purchaser.

This Warranty is void without proof of purchase within the United States and Canada. Please be aware that this Warranty supersedes all other warranties and constitutes the entire agreement between the consumer and Chefman®. Any changes to the Terms and Conditions of this Warranty must be in writing, signed by a representative of Chefman®. No other party has the right or ability to alter or change the Terms and Conditions of this Warranty.

We may ask you to please submit, via email, photos and/or video of the issue you are experiencing. This is to help us better assess the matter and possibly offer a quick fix. Photos and/or video may also be required to determine Warranty eligibility.

We encourage you to register your product. Registering can make the Warranty process easier and can keep you informed of any updates or recalls on your product. To register, follow the directions on the Chefman® Warranty Registration page in the Chefman® User Guide. Please retain your proof of purchase even after registering. In the event that you do not have proof of your purchase date, we may declare your Warranty void or we may, at our sole discretion, apply the date of manufacture as the purchase date for purposes of this Warranty.

What the Warranty Covers

- **Manufacturer Defects**
  Chefman® products are warranted against defects in material and workmanship, under normal household use, for a period of 1 year from the date of delivery when used in accordance with the directions listed in the Chefman® User Guide. If your product does not work as it should, please contact Customer Support at support@chefman.com so that we may assist you.

This Warranty Does Not Cover

- **Misuse**
  Damage that occurs from neglectful or improper use of products, including, but not limited to, damage that occurs as a result of usage with incompatible voltage, regardless of whether the product was used with a converter or adapter. See Safety Instructions in the Chefman® User Guide for information on proper use of product;

- **Poor Maintenance**
  General lack of proper care. We encourage you to take care of your Chefman® products so that you may continue to enjoy them. Please see Keep It Clean in this Chefman® User Guide for information on proper maintenance;

- **Commercial Use**
  Damage that occurs from commercial use;

- **Normal Wear and Tear**
  Damage or degradation expected to occur due to normal use over time;

- **Altered Products**
  Damage that occurs from alterations or modifications by any entity other than Chefman® such as the removal of the rating label affixed to the product;

- **Catastrophic Events**
  Damage that occurs from fire, floods, or natural disasters; or

- **Loss of Interest**
  Claims of loss of interest or enjoyment.

For product information, please visit us at Chefman.com.

EXCEPT WHERE SUCH LIABILITY IS REQUIRED BY LAW, THIS WARRANTY DOES NOT COVER, AND CHEFMAN® SHALL NOT BE LIABLE FOR, INCIDENTAL, INDIRECT, SPECIAL, OR CONSEQUENTIAL DAMAGES, INCLUDING WITHOUT LIMITATION, DAMAGE TO, OR LOSS OF USE OF THE PRODUCT, OR LOST SALES OR PROFITS OR DELAY OR FAILURE TO PERFORM THIS WARRANTY OBLIGATION. THE REMEDIES PROVIDED HEREIN ARE THE EXCLUSIVE REMEDIES UNDER THIS WARRANTY, WHETHER BASED ON CONTRACT, TORT OR OTHERWISE.

Warranty Registration

What do I need to register my product?

- Contact Information
- Model Number (see example below)
- Proof of Purchase (online confirmation, receipt, gift receipt)
- Date Code (see example below)
- Access Code (see example below)

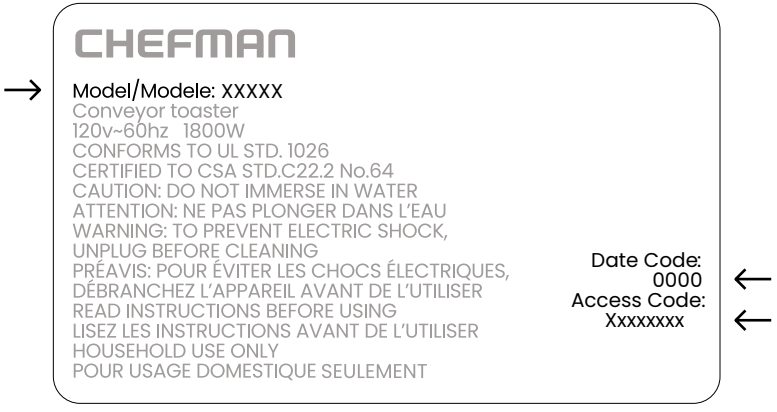

NOTE: Label depicted here is an example.
Please see label on your product for actual model/date code/access code.

How do I register my product?

All you need to do is fill out a simple Chefman® registration form.
You can easily access the form in one of the two ways listed below:

- Visit Chefman.com/register.
- Scan the QR code to the right to access site.

CHEFMAN

7-Quart
Digital Slow Cooker

RJ157SSDUG021226

Chefman® is a registered trademark of RJ Brands, LLC.