CHEFMAN®
BOILS FAST

FAST-BOIL™

1.2L ELECTRIC KETTLE

USER GUIDE

- Safety instructions
- Features
- Operating instructions
- Cleaning and maintenance
- Troubleshooting
- Notes
- Terms and conditions
- Warranty registration

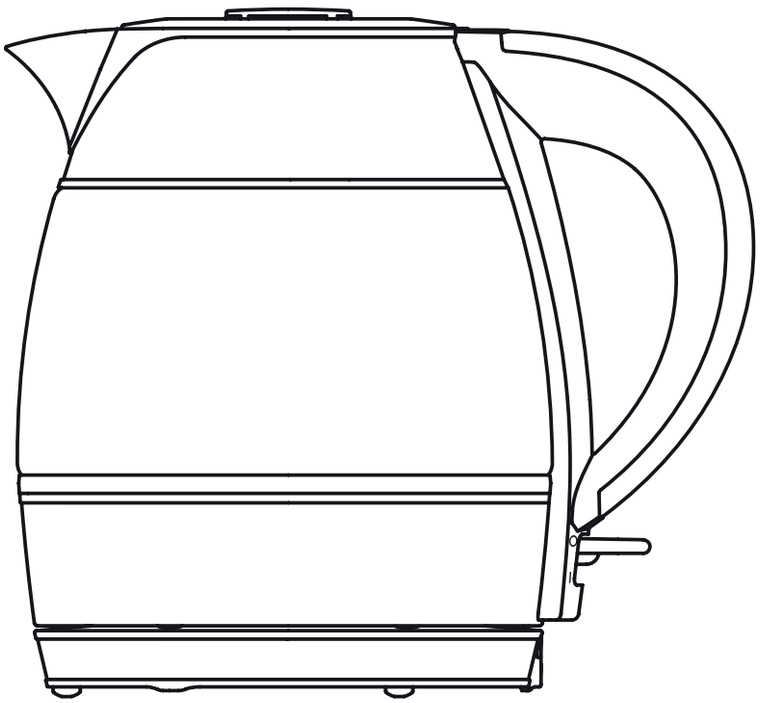

RJ11-12

COOKING FORWARD™

Welcome!

Whether this is your first Chefman® appliance or you're already a part of our family, we're happy to be in the kitchen with you. The Fast-Boil™ 1.2L Electric Kettle was designed to easily and quickly bring a pot of water to a boil for tea or other hot beverages. The compact size makes it perfect for smaller spaces or the office, and the kettle's rapid-heat technology means you can be steeping in minutes. The LED indicator lights to make it easy to see at a glance that your water is ready.

We know you're excited to start sipping, but please take a few minutes to read our directions, safety instructions, and warranty information.

From our kitchen to yours,
The Chefman® Team



READ ALL INSTRUCTIONS BEFORE USE

For your safety and continued enjoyment of this product, always read the instruction manual before using.

CONTENTS

4 Safety instructions

8 Features

9 Operating instructions

11 Cleaning and maintenance

13 Troubleshooting

14 Notes

15 Terms and conditions

18 Warranty registration

SAFETY INSTRUCTIONS

IMPORTANT SAFEGUARDS

WARNING: When using electrical appliances, basic safety precautions should always be followed, including the following:

1. Read all instructions.
2. Do not touch hot surfaces. Use handle.
3. To protect against fire, electric shock, and injury to persons do not immerse cord, plug, charging base, or unit in water or other liquid.
4. Close supervision is necessary when any appliance is used by or near children.
5. Unplug from outlet when not in use and before cleaning. Allow to cool before putting on or taking off parts, and before cleaning the appliance.
6. Do not operate any appliance with a damaged cord or plug or after the appliance malfunctions or has been damaged in any manner. Contact Chefman® Customer Support for examination, repair, or adjustment.
7. The use of accessory attachments not recommended by Chefman® may result in fire, electric shock, or injury to persons.
8. Do not use outdoors.
9. Do not let cord hang over edge of table or counter or touch hot surfaces.

SAFETY INSTRUCTIONS

IMPORTANT SAFEGUARDS

10. Do not place the unit near or on any type of heat source, such as a gas or electric burner, stove, or oven, even if not on. Do not use near an open flame or flammable materials.
11. To disconnect, turn any control to off, then remove plug from wall outlet.
12. Do not use the appliance for other than its intended use.
13. Scalding may occur if the lid is opened during the heating cycle.
14. Ensure lid is securely closed before serving any beverages.
15. Do not set a hot container on a wet or cold surface.
16. Do not use a cracked container or a container having a loose or weakened handle.
17. Do not clean container with cleaners, steel wool pads, or other abrasive material.

FOR HOUSEHOLD USE ONLY

SAVE THESE INSTRUCTIONS

SAFETY INSTRUCTIONS

IMPORTANT SAFEGUARDS

WARNING: This appliance has a polarized plug (one blade is wider than the other). This plug is intended to fit into a polarized outlet only one way. If the plug does not fit fully into the outlet, reverse the plug. If it still does not fit, contact a qualified electrician. Do not attempt to modify the plug in any way or force it into the outlet. This could result in injury or electrical shock.

SHORT CORD INSTRUCTIONS

A short power-supply cord is provided to reduce the hazards of entanglement or tripping over a longer cord. Longer detachable power-supply cords or extension cords are available and may be used if care is exercised in their use. If a longer detachable power-supply extension cord is used:

1. The marked electrical rating of the extension cord should be at least as great as the electrical rating of the appliance.
2. The longer cord should be arranged so that it will not drape over the countertop or tabletop where it can be pulled on by children or tripped over.

SAFETY INSTRUCTIONS

IMPORTANT SAFEGUARDS

POWER CORD SAFETY TIPS

1. Never pull or yank on the cord or the appliance.
2. To insert the plug, grasp it firmly and guide it into the outlet.
3. To disconnect the appliance, grasp the plug and remove it from the outlet.
4. Never use the product if the power cord shows signs of abrasion or excessive wear. Contact Chefman Customer Support for additional guidance and support.
5. Never wrap the cord tightly around the appliance, as this could place undue stress on the cord where it enters the appliance and cause it to fray and break.

DO NOT OPERATE APPLIANCE IF THE POWER CORD SHOWS ANY DAMAGE OR IF APPLIANCE WORKS INTERMITTENTLY OR STOPS WORKING ENTIRELY.

California Proposition 65:
(Applicable for California Residents only)

WARNING:
Cancer and Reproductive Harm - **www.P65Warnings.ca.gov.**



Do not place the appliance on a stovetop or any other heatable surface, even if stovetop is not on. Doing so is a fire hazard.

FEATURES

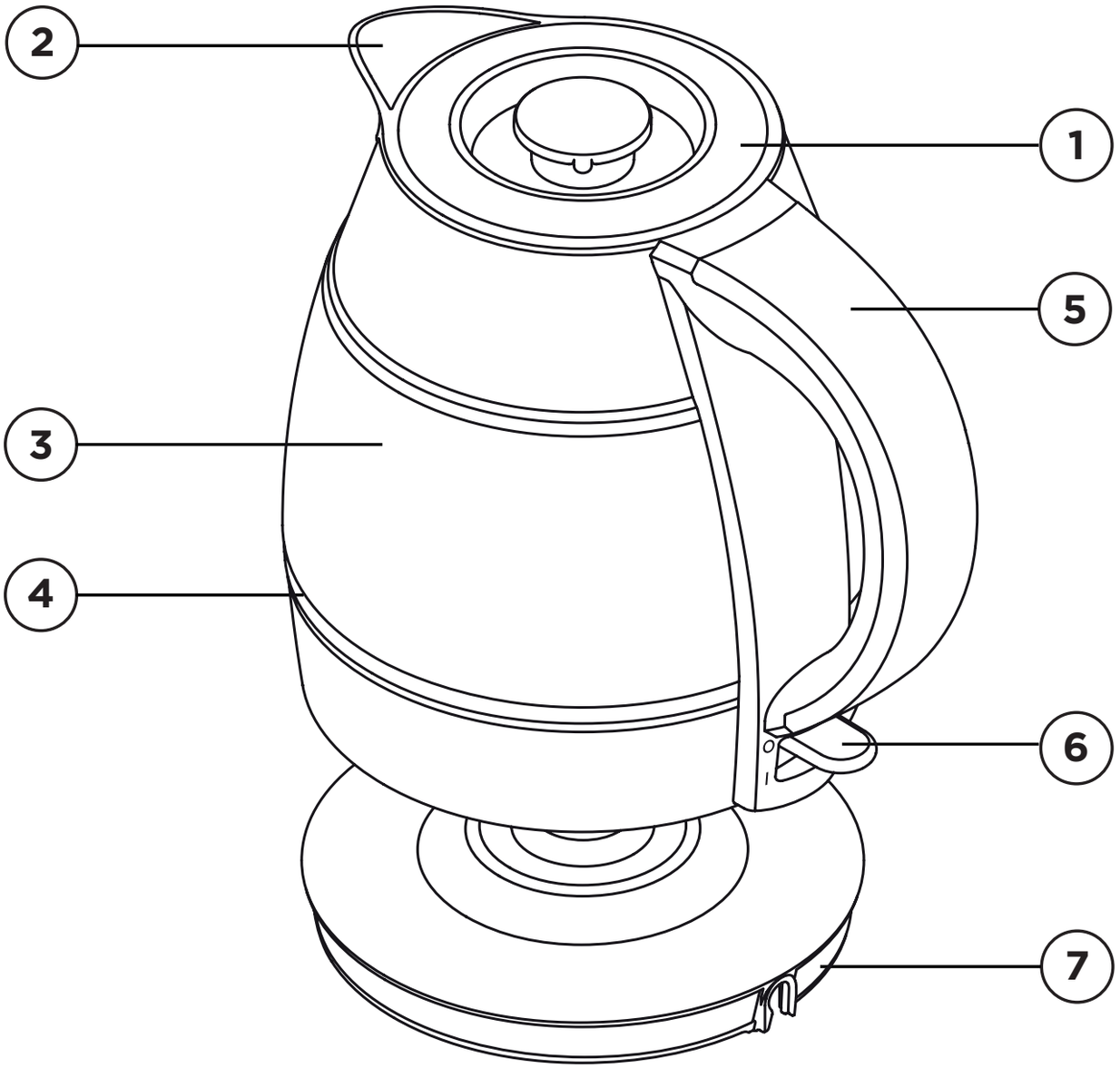

1. Removable lid
2. Drip-free spout with filter
3. Glass kettle
4. Blue LED indicator lights
5. Stay-cool handle
6. On/Off switch
7. 360° Swivel base

OPERATING INSTRUCTIONS

BEFORE FIRST USE

1. Read all instructions and follow them carefully.

2. Remove all packing materials and stickers from the inside and outside of the kettle. Gently wipe down the exterior with a damp cloth or paper towel.

2. Lift off the lid, fill with water to the MAX fill line (1.2 L) and bring to a boil following the instructions below.

4. Discard the boiled water, then rinse the kettle with fresh water. Never immerse the kettle, its base, the cord, or plug in water or any other liquid. The electrical connections and the On/Off switch must never come into contact with water or any other liquid.

HOW TO USE

1. Wedge the power cord into the notch on the 360° swivel base. Place the base on a flat, sturdy surface away from water splashes and any sources of heat. Plug cord into outlet.

2. Remove kettle from base if attached. Lift off the lid. Fill with desired amount of water. Do not exceed the MAX fill line (1.2 L), and do not fill below the MIN fill line (0.5 L). **NOTE:** Only use the kettle to heat water.

3. Return the lid to the kettle.

OPERATING INSTRUCTIONS

4. Place the kettle onto the base. Ensure that both the kettle and base are steady on the flat, sturdy surface.
5. Press the On/Off switch to turn the kettle on. The blue LED lights inside the kettle will illuminate to indicate the water is heating. Small bubbles will begin to form in the water to indicate the water is heating up, then large ones to indicate it's boiling. Once the water comes to a boil, the kettle and On/Off indicator light will automatically turn off. **CAUTION:** The kettle and water inside will be very hot. Handle with care. If choosing to open the lid when there is hot water inside, do so carefully. Hot steam may escape.
6. Use the handle to lift the kettle off the base. Carefully pour into desired vessel, i.e., cup, bowl, etc.
7. Return the kettle to the base. Press On/Off switch at any time to reheat the water (ensuring first that it is above the MIN line).

BOIL-DRY PROTECTION

If the kettle starts to heat without enough water, it will automatically turn off to avoid any potential damage.

CLEANING AND MAINTENANCE

CLEANING YOUR KETTLE

1. Unplug the kettle and allow it to cool.
2. Once it’s completely cool, gently wipe down exterior of the kettle with a damp cloth or paper towel.
3. Rinse the inside with water. **WARNING:** Never immerse the kettle, its base, the cord or the plug in water or any other liquid.
   IMPORTANT: The electrical connections and the On/Off switch must never come into contact with water or any other liquid.
4. To clean the spout filter, rinse it under hot water while gently rubbing it with a clean cloth or brush. Do not remove the spout filter.
5. Dry completely.

CLEANING AND MAINTENANCE

DESCALING

For the best-tasting hot water, descale the kettle regularly to remove any mineral deposits that may accumulate over time and cause discoloration. Descaling is recommended at least once a month, or more regularly if your water is very hard.

You can descale using either a commercial descaling solution, following the manufacturer's instructions, or using white vinegar. To descale with white vinegar: Fill the kettle with ¼ L water and ¼ L white vinegar and switch it on to boil. Once the mixture comes to a boil and the kettle shuts off, let it stand for 1 hour. Empty the kettle and rinse with water 5 to 6 times. Repeat if necessary.

NEVER USE A DESCALING METHOD OTHER THAN RECOMMENDED.

TROUBLESHOOTING

Problem	Possible Cause	Possible Solution
Kettle does not boil.	Kettle has become disconnected.	Insert the plug into the electrical outlet.
	Kettle is not properly connected to base.	Ensure that the kettle is properly inserted onto the base.
Kettle does not work.	Kettle was turned On without water and overheated.	Allow the kettle to cool and fill with water. It should start working in about 15 minutes.
Water has an unusual taste.	Kettle is new.	Pour out the water and boil clean water. If this problem continues, fill the kettle with water and two teaspoons of baking soda. Bring the water to a boil, let cool and pour out water. Rinse with lukewarm water.
Kettle turns On and switches Off immediately.	There is not enough water in the kettle.	Fill kettle with at least 0.5 L water so water reaches the MIN fill line. The kettle is equipped with Boil-Dry Protection to protect your kettle from heating up when there’s not enough water in it.

NOTES

TERMS AND CONDITIONS

Limited Warranty

RJ Brands, LLC d/b/a Chefman® offers a limited 1-year Warranty (the "Warranty") available on sales through authorized distributors and retailers only. Please note that this Warranty becomes valid from the date of initial retail purchase and that the Warranty is nontransferable and applies only to the original purchaser.

This Warranty is void without proof of purchase within the United States and Canada. Please be aware that this Warranty supersedes all other warranties and constitutes the entire agreement between the consumer and Chefman®. Any changes to the Terms and Conditions of this Warranty must be in writing, signed by a representative of Chefman®. No other party has the right or ability to alter or change the Terms and Conditions of this Warranty.

We may ask you to please submit, via email, photos and/or video of the issue you are experiencing. This is to help us better assess the matter and possibly offer a quick fix. Photos and/or video may also be required to determine Warranty eligibility.

We encourage you to register your product. Registering can make the Warranty process easier and can keep you informed of any updates or recalls on your product. To register, follow the directions on the Chefman® Warranty Registration page in the Chefman® User Guide. Please retain your proof of purchase even after registering. In the event that you do not have proof of your purchase date, we may declare your Warranty void or we may, at our sole discretion, apply the date of manufacture as the purchase date for purposes of this Warranty.

TERMS AND CONDITIONS
Limited Warranty

WHAT THE WARRANTY COVERS

- **Manufacturer Defects**
  Chefman® products are warranted against defects in material and workmanship, under normal household use, for a period of 1 year from the date of purchase when used in accordance with the directions listed in the Chefman® User Guide. If your product does not work as it should, please contact Customer Support at support@chefman.com so that we may assist you

THIS WARRANTY DOES NOT COVER

- **Misuse**
  Damage that occurs from neglectful or improper use of products, including, but not limited to, damage that occurs as a result of usage with incompatible voltage, regardless of whether the product was used with a converter or adapter. See Safety Instructions in the Chefman® User Guide for information on proper use of product;
- **Poor Maintenance**
  General lack of proper care. We encourage you to take care of your Chefman® products so that you may continue to enjoy them. Please see Cleaning and Maintenance directions in the Chefman® User Guide for information on proper maintenance;

TERMS AND CONDITIONS
Limited Warranty

- **Commercial Use**
  Damage that occurs from commercial use;
- **Normal Wear and Tear**
  Damage or degradation expected to occur due to normal use over time;
- **Altered Products**
  Damage that occurs from alterations or modifications by any entity other than Chefman® such as the removal of the rating label affixed to the product;
- **Catastrophic Events**
  Damage that occurs from fire, floods, or natural disasters; or
- **Loss of Interest**
  Claims of loss of interest or enjoyment.

CHEFMAN® WARRANTY REGISTRATION

What do I need to register my product?

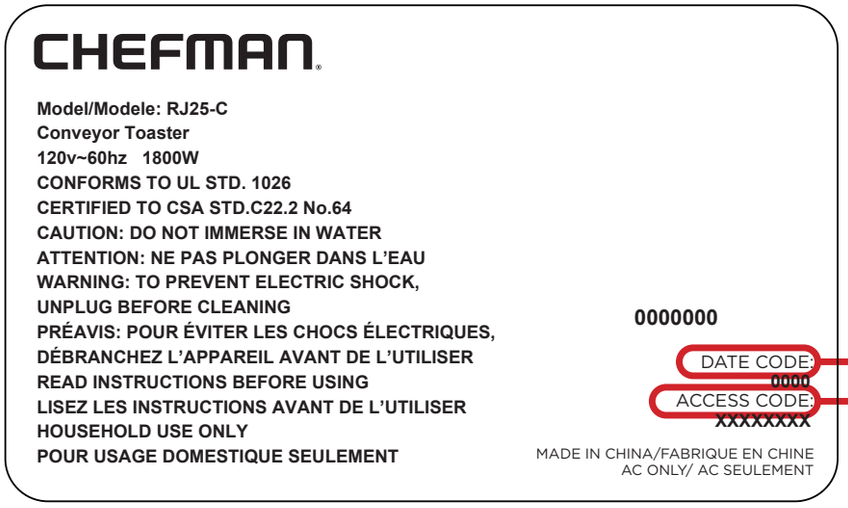

- Contact Information
- Model Number
- Proof of Purchase (online confirmation, receipt, gift receipt)
- Date Code
- Access Code

NOTE: Label depicted here is an example.

How do I register my product?

All you need to do is fill out a simple Chefman® registration form. You can easily access the form in one of the two ways listed below:

1. Visit Chefman.com/register.
2. Scan the QR code to access site:

CHEFMAN® WARRANTY REGISTRATION

For product information
Please visit us at Chefman.com.

EXCEPT WHERE SUCH LIABILITY IS REQUIRED BY LAW, THIS WARRANTY DOES NOT COVER, AND CHEFMAN® SHALL NOT BE LIABLE FOR, INCIDENTAL, INDIRECT, SPECIAL, OR CONSEQUENTIAL DAMAGES, INCLUDING WITHOUT LIMITATION, DAMAGE TO, OR LOSS OF USE OF THE PRODUCT, OR LOST SALES OR PROFITS OR DELAY OR FAILURE TO PERFORM THIS WARRANTY OBLIGATION. THE REMEDIES PROVIDED HEREIN ARE THE EXCLUSIVE REMEDIES UNDER THIS WARRANTY, WHETHER BASED ON CONTRACT, TORT OR OTHERWISE.

Chefman® is a registered trademark of RJ Brands, LLC.
Cooking Forward™ is a trademark of RJ Brands, LLC.

CHEFMAN®

CHEFMAN.COM | @MYCHEFMAN

©CHEFMAN 2025

RJ11-12_UG_FINAL_OTP_011625