OPERATOR'S MANUAL

MODEL #201533
10 TON LOG SPLITTER

ACTIVATE YOUR WARRANTY

by registering your product:
championpowerequipment.com

SERIAL NO.

1·877·338·0999

or visit **championpowerequipment.com**

READ AND SAVE THIS MANUAL. This manual contains important safety precautions which should be read and understood before operating the product. Failure to do so could result in serious injury. This manual should remain with the product.

Specifications, descriptions and illustrations in this manual are as accurate as known at the time of publication, but are subject to change without notice.

5434-M-OP | REV 20250724 | EN

Champion Power Equipment, Inc.

TABLE OF CONTENTS

Introduction **3**

Safety Definitions **3**

Important Safety Instructions **4**

Fuel Safety 5
Training Instructions 6
Preparation 7
Operation 7
Maintenance 8
Safety and Dataplate Labels 9
Safety Symbols 10
Operation Symbols 12
Quickstart Label Symbols 12

Controls and Features **13**

Log Splitter 13
Engine 14
Parts Included 15
Parts Not Included 15

Assembly **16**

Open Shipping Crate 16
Install the Wheels 16
Install the Support Leg 16
Install the Beam 16
Install the Engine 17
Install the Cylinder 17
Install the Bracket 17
Install the Handle 17
Install the Hoses 17
Add Engine Oil 19
Add Fuel 20
Add Hydraulic Oil 21

Operation **21**

Before Each Use Inspect the Log Splitter 21
Log Splitter Location 22
Starting the Engine 22
Stopping the Engine 22
Log Splitter Operation 23

Maintenance **23**

Cleaning the Log Splitter 23
Changing the Engine Oil 24
Cleaning and Adjusting the Spark Plug(s) 24
Cleaning the Air Filter 24
Changing the Hydraulic Oil 25
Maintenance Schedule 25

Storage **26**

Log Splitter Storage 26
Engine Stored for Less than 30 Days 26
Engines Stored for Over 30 Days 26

Specifications **27**

Log Splitter Specifications 27
Engine Specifications 27
Engine Oil Specifications 27
Hydraulic Oil Specifications 27
Fuel Specifications 27
Spark Plug Specifications 27
Valve Specifications 27
Important Message About Temperature 27

Troubleshooting **28**

FOR PARTS BREAKDOWN

Search by model number at
championpowerequipment.com

INTRODUCTION

Congratulations on your purchase of a Champion Power Equipment (CPE) product. CPE designs, builds, and supports all of our products to strict specifications and guidelines. With proper product knowledge, safe use, and regular maintenance, this product should bring years of satisfying service.

Every effort has been made to ensure the accuracy and completeness of the information in this manual at the time of publication, and we reserve the right to change, alter and/or improve the product and this document at any time without prior notice.

Since CPE highly values how our products are designed, manufactured, operated and are serviced, and also highly value your safety and the safety of others, we would like you to take the time to review this product manual and other product materials thoroughly and be fully aware and knowledgeable of the assembly, operation, dangers and maintenance of the product before use. Fully familiarize yourself, and make sure others who plan on operating the product fully familiarize themselves too, with the proper safety and operation procedures before each use. Please always exercise common sense and always err on the side of caution when operating the product to ensure no accident, property damage, or injury occurs. We want you to continue to use and be satisfied with your CPE product for years to come.

When contacting CPE about parts and/or service, you will need to supply the complete model and serial numbers of your product. Transcribe the information found on your product's nameplate label to the table below

CPE TECHNICAL SUPPORT TEAM
1-877-338-0999
MODEL NUMBER
201533
SERIAL NUMBER
DATE OF PURCHASE
PURCHASE LOCATION

SAFETY DEFINITIONS

The purpose of safety symbols is to attract your attention to possible dangers. The safety symbols, and their explanations, deserve your careful attention and understanding. The safety warnings do not by themselves eliminate any danger.
The instructions or warnings they give are not substitutes for proper accident prevention measures.

⚠ DANGER

DANGER indicates a hazardous situation which, if not avoided, will result in death or serious injury.

⚠ WARNING

WARNING indicates a hazardous situation which, if not avoided, could result in death or serious injury.

⚠ CAUTION

CAUTION indicates a hazardous situation which, if not avoided, could result in minor or moderate injury.

NOTICE

NOTICE indicates information considered important, but not hazard-related (e.g., messages relating to property damaged).

IMPORTANT SAFETY INSTRUCTIONS

⚠ WARNING

Cancer and Reproductive Harm – www.P65Warnings.ca.gov

⚠ DANGER

Engine exhaust contains carbon monoxide, a colorless, odorless, poison gas. Breathing carbon monoxide will cause nausea, dizziness, fainting or death.
If you start to feel dizzy or weak, move to fresh air immediately.

Operate log splitter ONLY outdoors in a well ventilated area.

DO NOT operate the log splitter inside any building, including garages, basements, crawlspaces, sheds, or enclosure.

DO NOT allow exhaust fumes to enter a confined area through windows, doors, vents or other openings.

⚠ DANGER

Using an engine indoors **CAN KILL YOU IN MINUTES**. Engine exhaust contains carbon monoxide. This is a poison you cannot see or smell.

NEVER use inside a home or garage, **EVEN IF** doors and windows are open.

ALWAYS use **OUTSIDE** and far away from windows, doors, and vents.

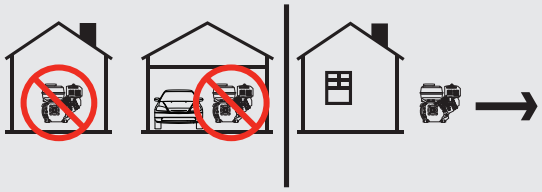

⚠ WARNING

Although the log splitter contains a spark arrester, maintain a minimum distance of 5 ft. (1.5 m) from dry vegetation to prevent fires.

⚠ WARNING

Sparks can result in fire or electrical shock.

When servicing the engine:

Disconnect the spark plug wire and place it where it cannot contact the plug.

DO NOT check for spark with the plug removed.

Use only approved spark plug testers.

⚠ WARNING

Running engines produce heat. Severe burns can occur on contact. Combustible material can catch fire on contact.

DO NOT touch hot surfaces.

Avoid contact with hot exhaust gases.

Allow equipment to cool before touching.

Maintain at least 3 ft. (91.4 cm) of clearance on all sides to ensure adequate cooling.

⚠ WARNING

Crush Hazard

Wedge can cut through skin and break bones. Keep all limbs away from wedge and endplate.

⚠ WARNING

Projectile Hazard

Pieces of log may be ejected from the log splitter while operating. Always wear ANSI approved safety glasses when operating. Be alert.

⚠ WARNING

Keep operator work zone clear of debris while working to ensure safe footing.

⚠ DANGER

Skin Injection Hazard.

Hydraulic oil escaping under high pressure can penetrate skin and cause serious bodily injury. In the event that hydraulic oil may penetrate the skin and to avoid serious infections such as gangrene, seek proper medical attention immediately.

⚠ WARNING

Always make sure all hydraulic oil connections are tightly secured and hydraulic hoses are in good condition, no cuts, tears, or damage before applying pressure to the system.

⚠ WARNING

Always keep hands and body parts away from nozzles or pinholes that could eject hydraulic oil under high pressure in the event of an oil leak.

NEVER use bare hands to search for leaks. Leaks can be detected by using cardboard, paper or scrap wood over the suspected area.

⚠ WARNING

Rapid retraction of the starter cord will pull hand and arm towards the engine faster than you can let go. Broken bones, fractures, bruises or sprains could result.

When starting engine, pull the starter cord slowly until resistance is felt and then pull rapidly to avoid kickback.

⚠ CAUTION

Parts of the hydraulic circuit (cylinder, pump, valve-body, hoses) can become very hot during operation.

⚠ WARNING

Improper treatment or use of the log splitter can damage it, shorten its life and void your warranty.

ALWAYS use the log splitter for its intended use.

ALWAYS operate only on level surfaces.

DO NOT expose log splitter to excessive moisture, dust, or dirt.

DO NOT allow any material to block the cooling slots.

DO NOT use the engine if:

- Equipment sparks, smokes or emits flames
- Equipment vibrates excessively

Fuel Safety

⚠ DANGER

GASOLINE AND GASOLINE VAPORS ARE HIGHLY FLAMMABLE AND EXPLOSIVE.

Fire or explosion can cause severe burns or death.

Gasoline and gasoline vapors:

- Gasoline vapors are highly flammable and explosive.
- Gasoline vapors can cause a fire or explosion if ignited.
- Gasoline is a liquid fuel and the resulting gasoline vapors can ignite and cause a fire or explosion.
- Gasoline is a skin irritant and needs to be cleaned up immediately if spilled on skin or clothes.
- Gasoline has a distinctive odor, this will help detect potential leaks quickly.
- In any petroleum gas fire, flames should not be extinguished unless by doing so the fuel supply valve can be turned OFF. This is because if a fire is extinguished and a supply of fuel is not turned OFF, then an explosion hazard could be created.
- Gasoline vapors expand and contract with ambient temperatures. Never fill the gasoline tank past the red FULL indicator on the fuel filter, as gasoline vapors needs room to expand if temperatures rise.

⚠ WARNING

When adding or removing gasoline:

Do not light or smoke cigarettes.

Always stop the engine and allow to cool for a minimum of two minutes before refueling.

Always loosen gasoline cap slowly to release vapor pressure and to keep fuel from escaping around the gasoline cap.

Always replace and tighten the gasoline cap securely after fueling.

Never remove the gasoline cap or add gasoline while the engine is running or when the engine is hot.

Always fill or drain gasoline outdoors in a well-ventilated area.

Do not pump gasoline directly into the log splitter at the gas station.

Always store gasoline in an EPA/CARB compliant container or to transfer the gasoline to the log splitter.

Do not overfill the gasoline tank.

Always keep gasoline away from sparks, open flames, pilot lights, heat and other sources of ignition.

⚠ WARNING

When starting the log splitter:

Do not attempt to start a damaged log splitter.

Always check that the gasoline cap, air filter, spark plug, fuel lines and exhaust system are properly in place.

Always allow spilled gasoline to evaporate fully before attempting to start the engine.

Always be certain that the log splitter is resting firmly on level ground.

⚠ WARNING

When operating the log splitter:

Do not move or tip the log splitter during operation.

⚠ WARNING

When transporting or servicing the log splitter:

Always check that the fuel valve is in the OFF position and the gasoline tank is empty.

Disconnect the spark plug wire.

⚠ WARNING

When storing the log splitter:

Store away from sparks, open flames, pilot lights, heat and other sources of ignition.

Do not store log splitter or gasoline near furnaces, water heaters, or any other appliances that produce heat or have automatic ignitions.

⚠ DANGER

Never place a gasoline container, gasoline tank, or any combustible material in the path of the exhaust stream during operation of the engine.

⚠ WARNING

Never use a gasoline container, gasoline tank, or any other fuel item that is broken, cut, torn or damaged.

Training Instructions

⚠ CAUTION

1. Read the Operator's Manual completely before attempting to use this log splitter.
2. Do not allow anyone to operate your log splitter who has not read the Operator's Manual or has not been instructed on the safe use of the log splitter.
3. Never allow children or untrained adults to operate this machine.
4. Accidents occur when more than one (1) person operates the log splitter. If a helper is assisting in loading logs to be split, never actuate controls until helper is clear of the area.
5. Never transport cargo on the log splitter or ride on the machine.
6. High fluid pressures develop in hydraulic log splitters. Pressurized hydraulic fluid escaping through a pin hole opening can puncture skin and cause severe infections or blood poisoning. Therefore, these instructions should be followed at all times.
   - Do not operate the unit with frayed, kinked, cracked or damaged hoses, fittings, or tubing.
   - Stop the engine and relieve hydraulic system pressure before changing or adjusting fittings, hoses, tubing, or other system components.
   - Do not adjust the pressure settings of the pump or valve.
   - Do not check for leaks with your hand. Leaks can be detected by passing cardboard or wood over the suspected area. Look for discoloration. If injured by escaping fluid, see a doctor at once. Serious infection or reaction can develop if proper medical treatment is not administered immediately.
7. Keep the operator zone and adjacent area clear for safe, secure footing.
8. Your log splitter is equipped with an internal-combustion engine and is not intended for use near any unapproved regulated and controlled forest, brush, or grass covered land. Always check with your local municipality, state and federal regulations prior to use.
9. Log splitters should be used only for splitting wood.

Preparation

⚠ CAUTION

1. Be thoroughly familiar with all controls and with proper use of the equipment.
2. Safety Gear:
   - Always wear safety shoes or heavy boots when operating the machine.
   - Always wear safety glasses or goggles when operating the machine.
   - Never wear jewelry or loose-fitting clothing that might become entangled in moving or rotating parts of the machine.
3. Make sure the log splitter is on a level surface. Block tires and ensure support leg is secure to prevent unintended movement of the log splitter during operation.
   - Always operate the splitter from the manufacturer's indicated operator zone.
4. Logs to be split on ram-type units should be cut as squarely as possible.

Operation

⚠ CAUTION

1. Before starting this log splitter, review all safety instructions. Failure to follow these instructions may result in serious injury to the operator or bystanders.
2. Be sure to confirm all hose clamp connections are tight before each use. It is possible for clamp connections to vibrate loose over time.
3. Never leave the machine unattended with the power source operating.
4. Never operate the machine when under the influence of alcohol, drugs or medication.
5. The machine owner should instruct all operators in safe log splitter operation.
6. Always operate the log splitter with all safety equipment in place and all controls properly adjusted for safe operation.
7. Always operate the log splitter at manufacturer's recommended speed.
8. Always keep hands and feet clear of moving parts.
9. When loading a ram-type log splitter, place your hands on the sides of the log, not the ends. Never place your hands or any part of your body between a log and any part of the log splitter.
10. On ram-type log splitters, never attempt to split more than one (1) log at a time unless the ram has been fully extended and a second log is needed to complete the separation of the first log.
11. On ram-type log splitters on which the logs are not cut square, the longest portion of the log should be rotated down and the most square end placed against the ram.
12. Always split logs with the grain of the wood.
13. Never split perpendicular to the grain of the wood.
14. Use only your hand to operate the log splitter controls.
15. Never add fuel to a running or hot engine.
16. Always turn the engine off and wait a minimum of 2 minutes to cool engine before removing gasoline cap prior to refueling.

Maintenance

⚠ CAUTION

1. Always shut off the power source while repairing or adjusting the log splitter except as recommended by the manufacturer.
2. Clean debris and chaff from the engine cylinder, cylinder head fins, recoil starter cover, and muffler areas. The engine is equipped with a spark arrestor muffler, clean and inspect it regularly (follow manufacturer's service instructions). Replace, if damaged.
3. Check to be sure all nuts and bolts are tight to assure the equipment is in safe working condition before next operation.

Safety and Dataplate Labels

These labels warn you of potential hazards that can cause serious injury. Read them carefully.

If a label comes off or becomes hard to read, contact Technical Support Team for possible replacement.

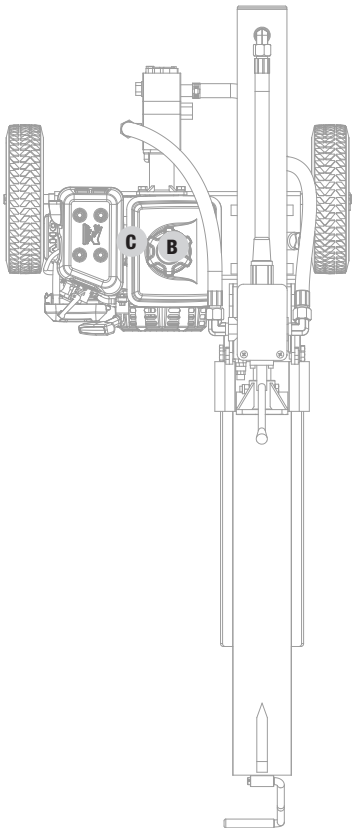

Top

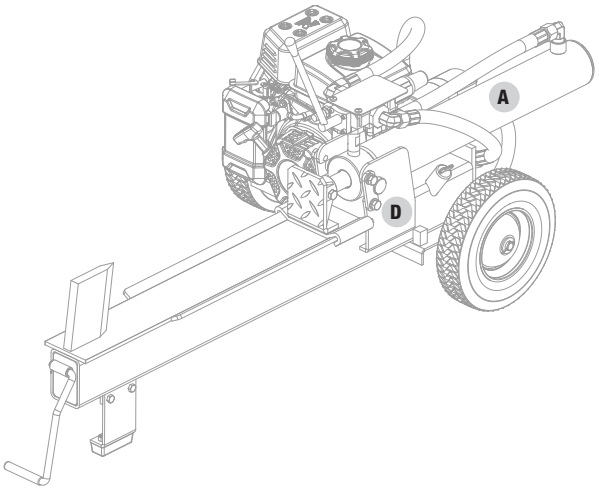

Side

	LABEL	DESCRIPTION
A		Safety Symbols/ CO Danger
B		Fuel
C		Hot Surface
D		Dataplate

Safety Symbols

Some of the following symbols may be used on this product. Please study them and learn their meaning. Proper interpretation of these symbols will allow you to more safely operate the product.

SYMBOL	MEANING
	Read Operator's Manual. To reduce the risk of injury, user must read and understand operator's manual before using this product.
	Eye and Ear Protection. Always wear safety goggles or safety glasses with side shields, and as necessary a full face-shield as well as full ear protection when operating this product.
	Footwear. Always wear safety shoes or heavy boots when operating the machine.
	Gloves. Always wear nonslip, heavy-duty protective gloves when operating this product.
	Safety Alert. Precautions that involve your safety.
	Risk of Fire. Fuel and its vapors are extremely flammable and explosive. Fire can cause severe burns or death. Do not add fuel while the product is operating or still hot.
	Skin Injection Hazard. High pressure hydraulic oil can inject under your skin. Make sure all fittings are tightly secure before applying pressure. Relieve system pressure before servicing.
	Always keep hands away from the wedge and the ram. Moving parts can crush or cut.

SYMBOL	MEANING
	Always keep feet away from the wedge and the ram. Moving parts can crush or cut.
	Hot Surface. To reduce the risk of injury or damage, avoid contact with any hot surface
	Open Flame alert. Fuel and its vapors are extremely flammable and explosive. Keep fuel away from smoking, open flames, sparks, pilot lights, heat, and other ignition sources.
	Hold logs on sides when loading. Keep hands and feet away from cylinder, wedge, and partially split logs.
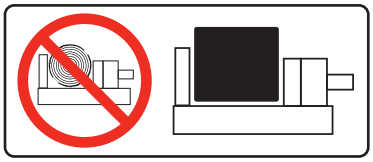	Never place hands or any part of the body between a log and any part of the log splitter. Do not split logs against the grain. Split logs end to end in the direction of the grain only.
	Toxic Fumes. The engine exhaust from this product contains chemicals known to the state of California to cause cancer and birth defects and other reproductive harm. **Risk of Asphyxiation.** This engine emits carbon monoxide, an odorless, colorless poison gas. Breathing carbon monoxide can cause nausea, fainting or death. Use only in a well ventilated area.
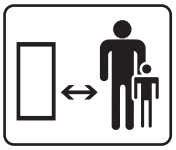	**Clearance.** Keep all objects including others at least 10 feet (3m) from this machine. Only one person should operate the log splitter and load the logs
	Never operate on an incline. Make sure the splitter is on a level surface. Block tires and ensure support leg is secure to prevent unintended movement of the log splitter during operation.

Operation Symbols

Some of the following symbols may be used on this product. Please study them and learn their meaning. Proper interpretation of these symbols will allow you to more safely operate the product.

SYMBOL	MEANING
	STOP or OFF
	Choke
	Run

SYMBOL		MEANING
		Fuel Valve ON/OFF

Quickstart Label Symbols

Some of the following symbols may be used on this product. Please study them and learn their meaning. Proper interpretation of these symbols will allow you to more safely operate the product.

Starting the Engine

⚠ DANGER

Move log splitter outside and far away from windows, doors and intake ventilation covers.

1. **Check oil level.**
   Recommended oil is 10W-30.
2. **Check gasoline level.**
   When adding gasoline, use a minimum octane rating of 87 and an ethanol content of 10% or less by volume.
3. Turn the **fuel valve** to “ON” position.
4. Move **choke lever** to “CHOKE” position.
5. Pull the **recoil cord**.
6. Move the **choke lever** to “RUN” position.

Stopping the Engine

1. Turn the **fuel valve** to “OFF” position.
2. Press **engine switch** to the “OFF” position.

CONTROLS AND FEATURES

Read this operator's manual before operating your log splitter. Familiarize yourself with the location and function of the controls and features. Save this manual for future reference.

Log Splitter

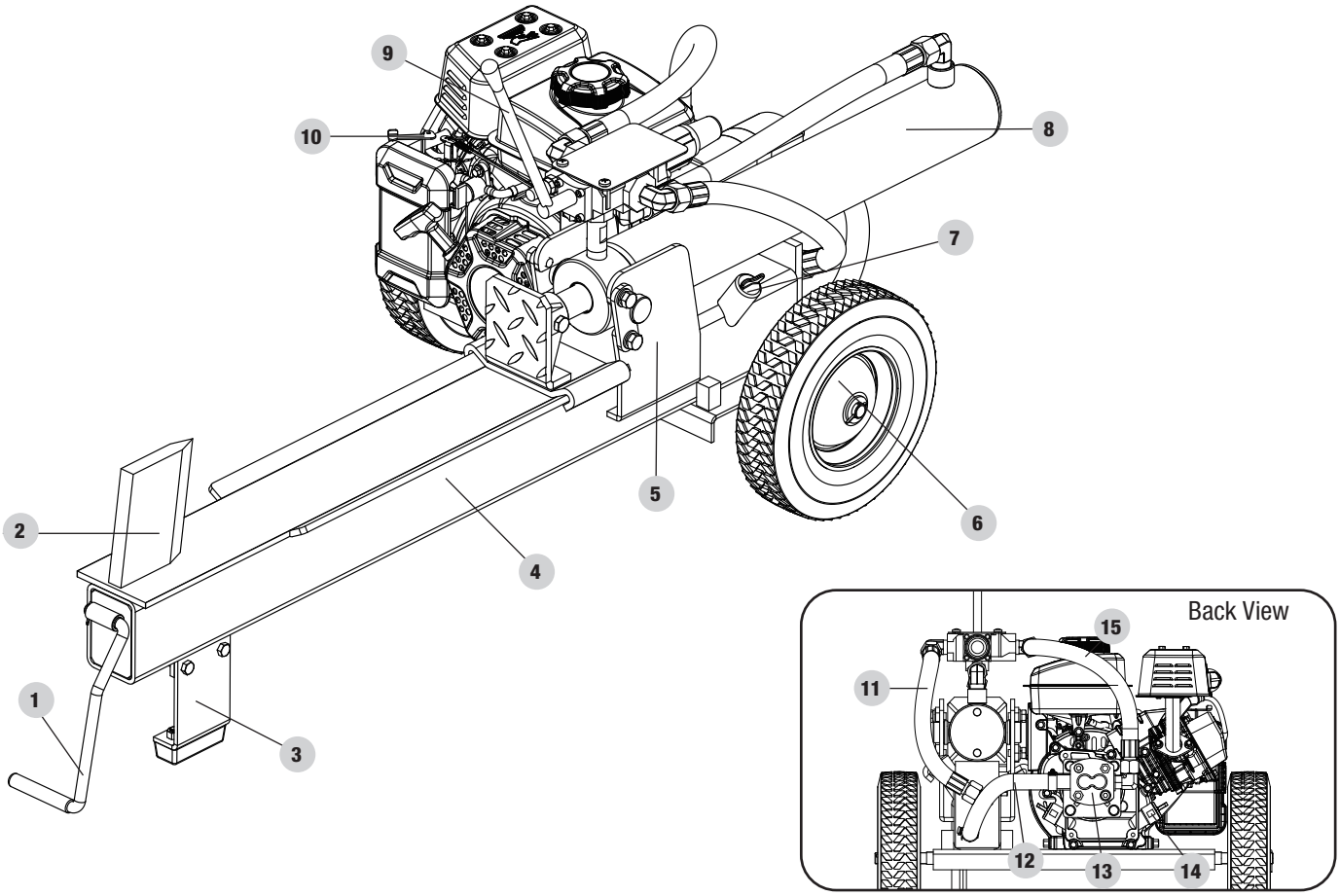

1. **Handle**
2. **Wedge**
3. **Support Leg** – Supports log splitter while operating.
4. **Splitting Beam / Log Cradle** – Prevents log from rolling off the beam.
5. **Mounting Plates** – Holds hydraulic cylinder in place.
6. **Wheels**
7. **Hydraulic Oil Dipstick** – Check and add Hydraulic oil.
8. **Hydraulic Cylinder** – Converts hydraulic pressure into linear force.
9. **Control Valve Handle** – Controls the movement of the thrust plate.
10. **Engine** – 79cc, OHV, 4-stroke, air cooled.
11. **Oil Return (Low pressure) Hose** – Feed hydraulic oil back into the hydraulic tank.
12. **Suction Hose** – Pulls hydraulic oil from the tank into the pump.
13. **Hydraulic Pump** – Pumps hydraulic oil through the system.
14. **Engine Oil Fill Cap / Dipstick** – Add or check the engine oil.
15. **Oil Inlet (High Pressure) Hose** – Feeds hydraulic oil into the hydraulic cylinder.

Engine

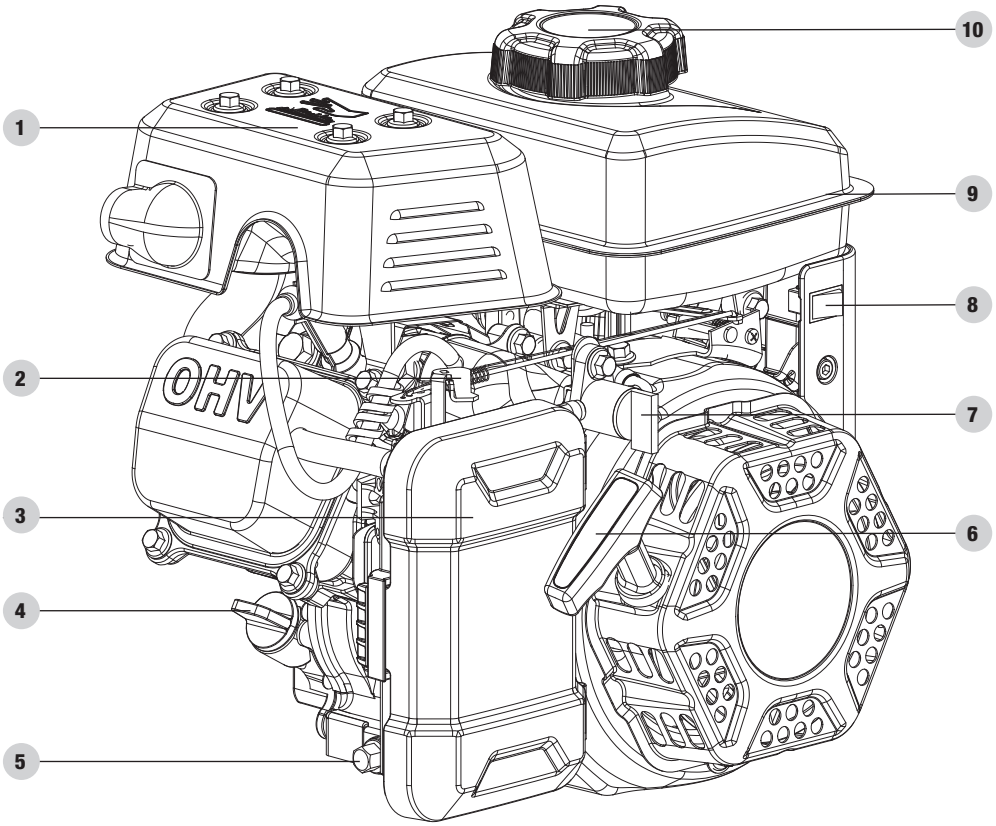

1. **Muffler**
2. **Choke**
3. **Air Filter**
4. **Engine Oil Fill Cap / Dipstick** (on each side)
5. **Oil Drain Bolt** (on each side)
6. **Recoil Starter**
7. **Fuel Valve**
8. **Engine On / Off Switch**
9. **Gasoline Tank** – 0.3 gal. (1.29 L)
10. **Gasoline Tank Cap**

Parts Included

Part	Part Qty.	Hardware Needed	Hardware Qty.	Tool Needed
Wheels	2	Cotter Pin Ø2.5 × 25	2	Needle nose pliers
		Washer Ø16	2	n/a
Support Leg	1	Bolt M8×25	2	2× 14mm wrench or socket
		Washer Ø8	2	n/a
		Lock washer Ø8	2	
		Nut M8	2	
Handle	1	Cotter Pin Ø2 × 20	1	Needle nose pliers
Engine	1	Bolt M8 × 20	4	1× 13 mm wrench or socket
		Washer Ø8	4	n/a
		Lock washer Ø8	4	
Engine Oil Funnel	1	n/a		n/a
Beam	1	Bolt M10 × 20	4	1× 8mm allen wrench
		Lock Washer Ø10	4	n/a
Ram Bracket	1	Bolt M10 × 60	1	1× 16mm wrench or socket
		Lock nut M10	1	1× 17mm wrench
Cylinder	1	Bolt M10 × 20	4	1× 17mm wrench or socket
		Washer Ø10	4	n/a
		Lock washer Ø10	4	
		Cylinder Fixing Plate	2	
Oil Return (Low Pressure) Hose	1	n/a		27mm open-end wrench
Oil Inlet (High Pressure) Hose	1	n/a		27mm open-end wrench
Suction Hose	1	C-Clamp	2	1× Cross head screw driver or 6mm socket
Spark Plug Socket Tool	1	n/a		n/a

Parts Not Included

– Engine Oil (10W-30): 0.4 US qt. (350 ml)

– Hydraulic Oil (ISO 32): 1.5 gal. (5.7 L)

ASSEMBLY

If your log splitter is already assembled, skip the assembly instructions in this manual.

If unassembled, please read and follow these instructions.

If you have any questions regarding the assembly of your log splitter, call our Technical Support Team at 1-877-338-0999. Please have your serial number and model number available.

Open Shipping Crate

1. Set the shipping crate on a solid, flat surface.
2. Carefully cut the shipping bands and remove lid of shipping crate.
3. Locate all hardware before beginning assembly.

Install the Wheels

1. Slide the wheel onto the axle.
2. Install the washer (38) and cotter pin (39) through the axle.

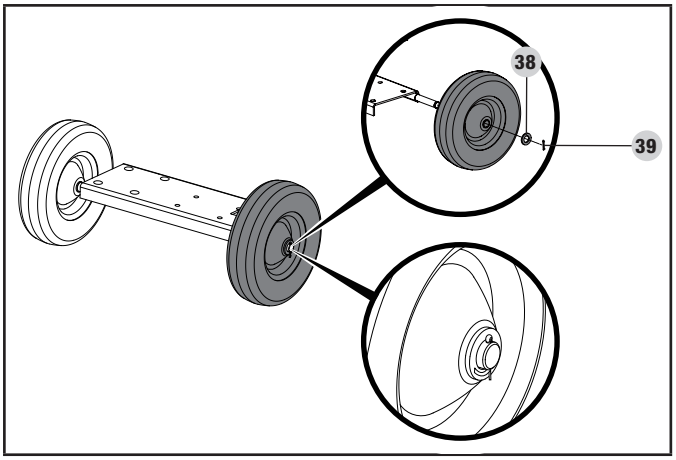

Install the Support Leg

1. Place the beam on a flat, level surface resting on the wedge and cylinder brackets.
2. Align the support leg (28) with the mounting holes on the beam bracket.
3. Place the M8×25 bolt (24) through the hole.
4. Place a Ø8 washer (27) and Ø8 lock washer (26) on the end of the bolt.
5. Install the M8 nut (25) on the bolt and tighten. Do not over tighten.

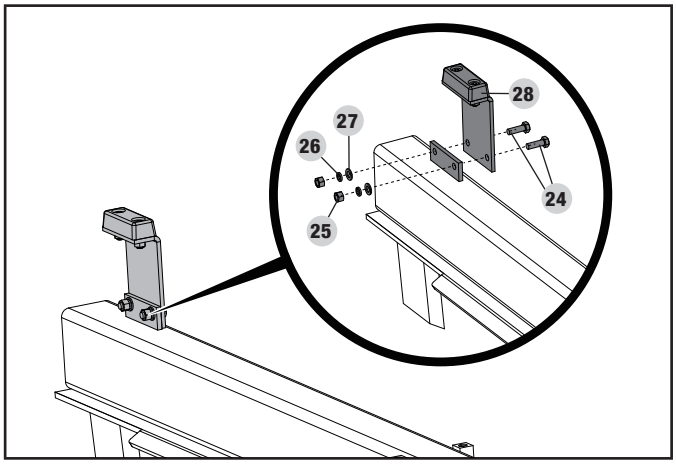

Install the Beam

1. With the beam still resting on the wedge and cylinder brackets, align the 4 larger holes on the wheel mount base plate with the threaded blocks on the beam.
2. Thread an M10×20 bolt (34) through a Ø10 washer (22).
3. Thread the bolt and washer through the hole on the base plate and into the threaded blocks on the beam and tighten
4. Repeat steps 1-3 for the remaining 3 bolt and washer sets to complete the mounting of the beam to the wheel mount.
5. Once all bolts are tightened, flip the assembly over to rest on the wheels and support leg.

NOTICE

The beam should extend to the opposite side of the wheel mounts as shown.

WARNING

The beam is extremely heavy and should only be handled with 2 or more people. DO NOT try and lift or handle the beam without assistance.

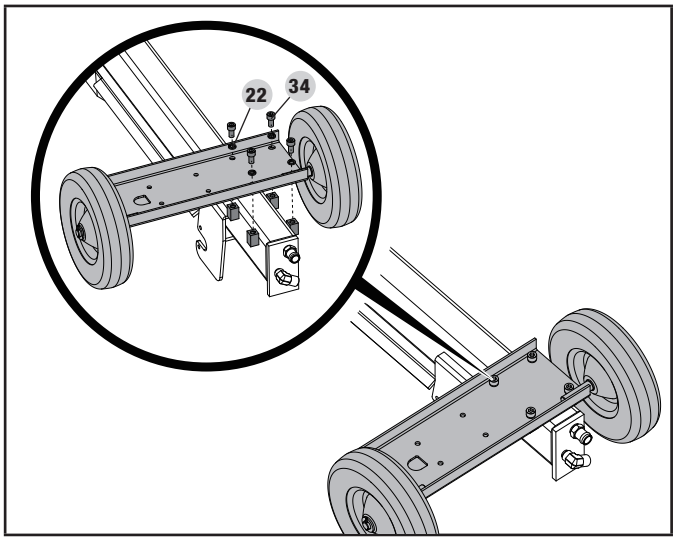

Install the Engine

1. Align the 4 holes on the base of the engine with the 4 smaller holes on the wheel mount.
2. Thread an M8×20 bolt (36) through an Ø8 Lock Washer (26) and Ø8 Washer (27).
3. Thread a bolt and washers set through a hole on the bottom of the wheel mount into the engine and tighten.
4. Repeat steps 1-3 for the remaining 3 bolt and washer sets to complete mounting of the engine to the wheel mount.

NOTICE

The recoil side of the engine should point the same direction as the beam as shown.

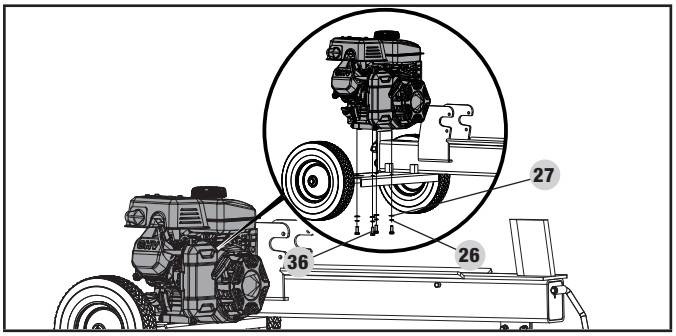

Install the Cylinder

1. Slide the cylinder pegs into the cylinder mounting slots on the top of the beam.
2. Secure the cylinder retention plates (20) with M10×20 bolts (23), Ø10 Lock Washers (22) and Ø10 Washers (21).

NOTICE

The recoil side of the engine should point the same direction as the beam as shown.

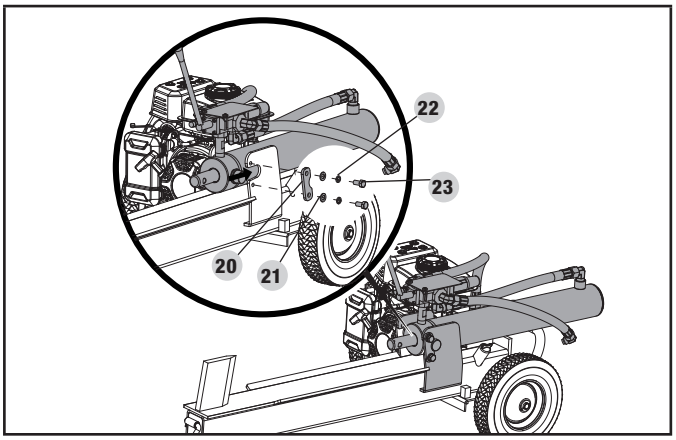

Install the Bracket

1. Slide the ram bracket (2) over the rod on the cylinder being sure to align the bolt holes.
2. Insert the M10×60 bolt (3) through the ram bracket and cylinder rod.
3. Secure the bolt with M10 lock nut (1). Do not over tighten.

NOTICE

A screwdriver can be inserted into the cylinder rod's bolt hole to rotate to proper position prior to installing the ram bracket.

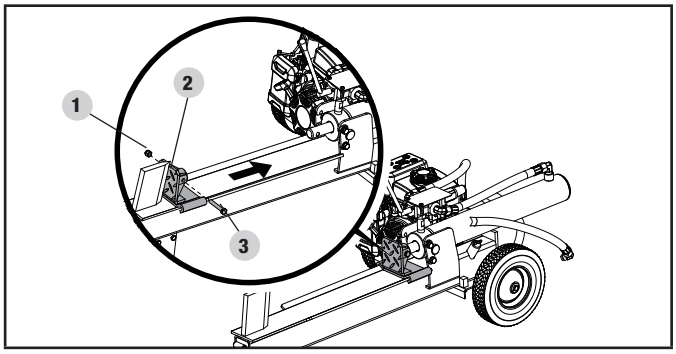

Install the Handle

1. Slide the handle (31) into the tube bracket on the end of the beam.
2. Secure with cotter pin (32).

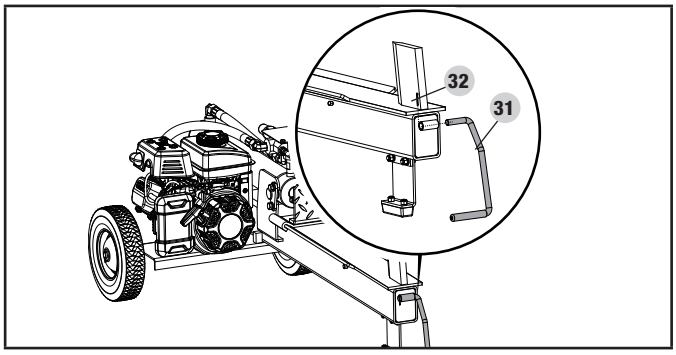

Install the Hoses

CAUTION

Red shipping plugs must be removed from hydraulic pump prior to installing hoses.

NOTICE

Hydraulic pump may contain residual oil from testing procedures during production. We recommend using an oil tray under the pump before removing the shipping plugs.

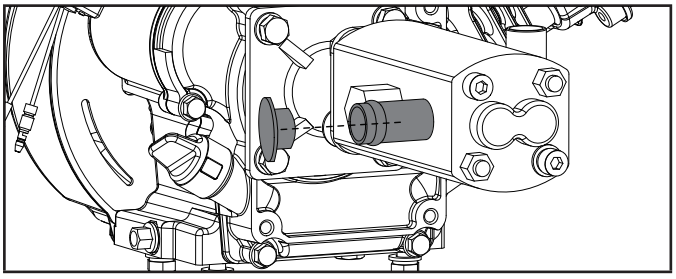

NOTICE

Some hoses may be preassembled by the factory, check your hoses per below instructions to ensure proper assembly.

Oil Inlet (High Pressure) and Oil Return Hoses

- These hoses are black and have swivel nuts on both ends.
- The oil inlet hose sends hydraulic oil from the pump to the control valve/cylinder.
- The oil return hose returns hydraulic oil from the control valve/cylinder to the tank.
- Hose connections do NOT require thread seal tape.

Suction Hose

- This is the clear hose that connects the hydraulic tank to the pump inlet.
- Secure both ends of hose with hose clamps.

Suction Hose

1. Using the provided hose clamps, connect one end of the clear oil hose to the hydraulic oil tank (C) just beneath the beam and the other end to the pump inlet on the side of the pump (D). Securely tighten the clamps on both ends of the clear hydraulic hose with either a flat head screw driver or 6mm socket (tighten to 3.65 ± 1.5 lbf-ft [4.95 ± 1.02 Nm]).

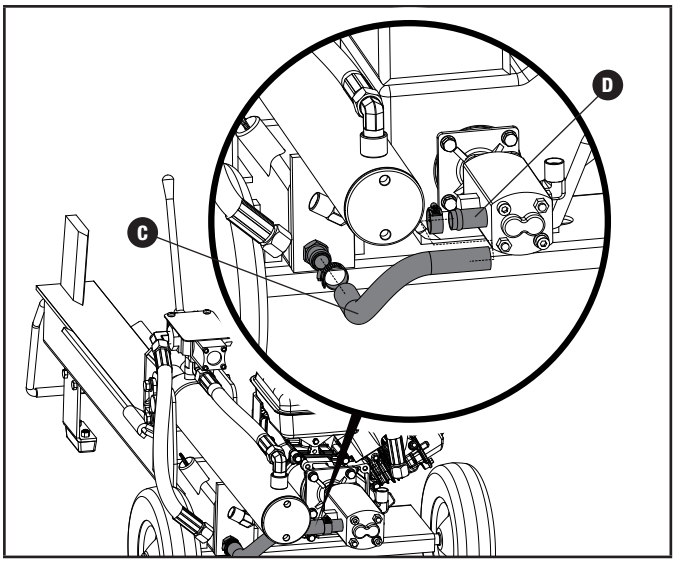

Oil Return (Low Pressure) Hose

2. Connect one end of hose to the control valve outlet (E). Connect the other end of the hose to the oil filter inlet (F). Securely tighten both ends of the hydraulic hose with a 27mm wrench (tighten to 48 ± 4 lbf-ft [65.1 ± 5.4 Nm]).

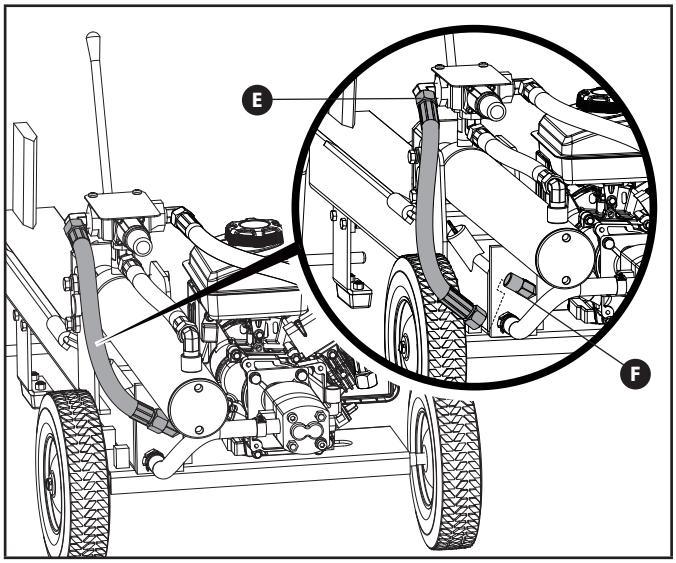

Oil Inlet (High Pressure) Hose

3. Connect one end of high pressure hose to the control valve inlet (A). Connect the other end of the hose to the pump outlet (B). Securely tighten both ends of the hydraulic hose with a 27mm wrench (tighten to 48 ± 4 lbf-ft [65.1 ± 5.4 Nm]).

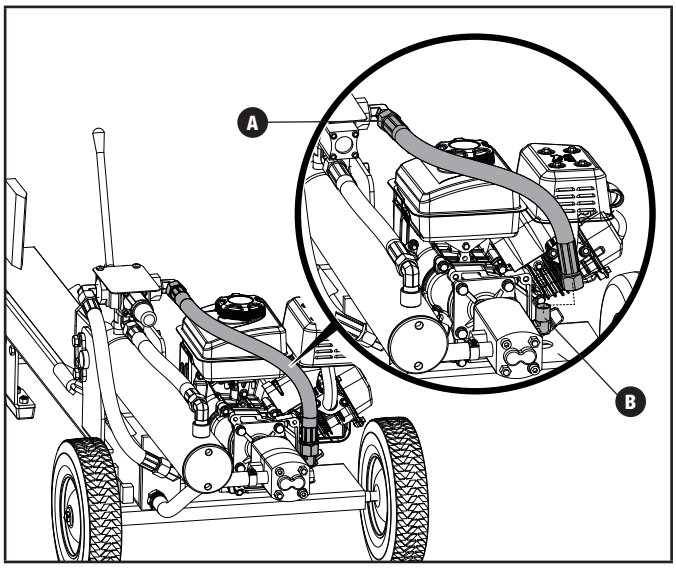

Add Engine Oil

⚠ WARNING

DO NOT attempt to crank or start the engine before it has been properly filled with the recommended type and amount of oil. Damage to the log splitter as a result of failing to follow these instructions will void your warranty.

NOTICE

The recommended oil type is **10W-30 automotive oil**.

NOTICE

Once oil has been added, a visual check should show oil about 1-2 threads from running out of the fill hole.

If using the dipstick to check oil level, DO NOT screw in the dipstick while checking.

NOTICE

Check oil often during the break-in period. Refer to the *Maintenance* section for recommended service intervals.

NOTICE

We consider the first 5 hours of run time to be the break-in period for the engine. During the break in period we recommend using standard automotive non-synthetic blended oils. After the break in period synthetic lubricant can be used but is not required. Avoid bogging or lugging the engine down and avoid prolonged running at constant RPM. After the 5 hour break-in period, change the oil.

NOTICE

Temperature will affect engine oil and engine performance. Change the type of engine oil used based on temperature shown in *Recommended Engine Oil Type* table.

NOTICE

Synthetic oil may be used after the 5 hour initial break-in period. Using synthetic oil does not decrease the recommended oil change interval. Full synthetic 5W-30 oil will aid in starting in cold ambient < 41ºF (5ºC).

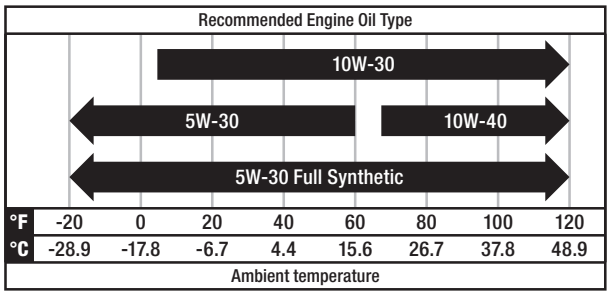

1. Place the log splitter on a flat, level surface.
2. Remove oil fill cap/dipstick to add oil.
3. Using a funnel, add up to 0.4 US qt. (350 ml) of oil and replace oil fill cap/dipstick. DO NOT OVERFILL.

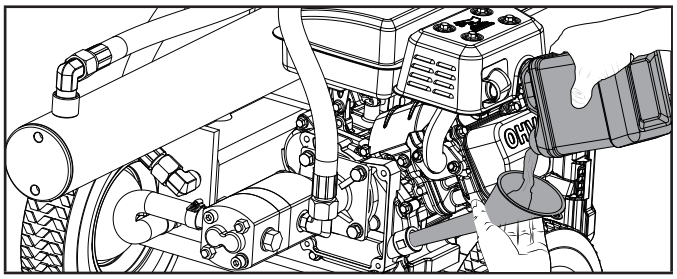

4. Check engine oil level daily and add as needed.

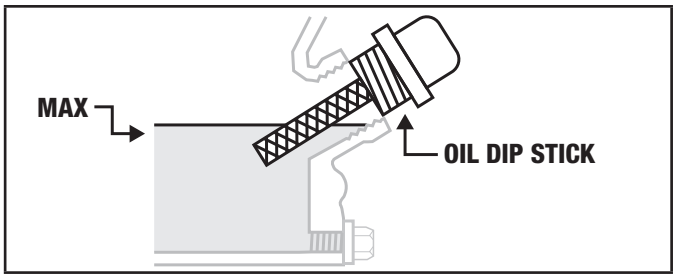

Add Fuel

⚠ DANGER

Gasoline vapors are highly flammable and extremely explosive.

DO NOT light or smoke cigarettes. Fire or explosion can cause severe burns or death.

Always fill or drain fuel outdoors in a well-ventilated area. DO NOT pump gasoline directly into the log splitter. Use an approved container to transfer the fuel to the log splitter.

Never use a gasoline container, gasoline tank, or any other fuel item that is broken, cut, torn or damaged.

DO NOT overfill the gasoline tank. Always keep fuel away from sparks, open flames, pilot lights, heat and other sources of ignition.

Use clean, fresh, regular unleaded gasoline with a minimum octane rating of 87 and an ethanol content of less than 10% by volume. E10 E15 E85

DO NOT mix oil with gasoline.

1. Remove the gasoline cap.
2. Slowly add gasoline to the tank. DO NOT OVERFILL. Gasoline can expand after filling. A minimum of ¼ in. (6.4 mm) of space left in the tank is required for gasoline expansion, although more than ¼ in. (6.4 mm) is recommended. Gasoline can be forced out of the tank as a result of expansion if overfilled, and can affect the stable running condition of the log splitter.

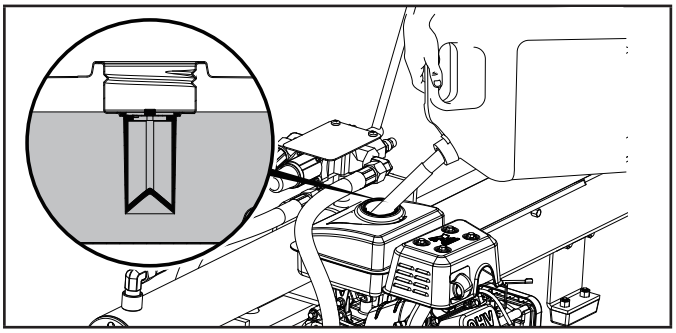

3. The approximate fuel level is shown on the fuel gauge on top of the fuel tank.

⚠ CAUTION

Use regular unleaded gasoline with a minimum octane rating of 87 and an ethanol content of less than 10% by volume.

DO NOT light cigarettes or smoke when filling the tank.

DO NOT mix oil and gasoline.

Fill tank to approximately ¼ in. (6.4 mm) below the top of the tank to allow for gasoline expansion.

DO NOT pump gasoline directly into the log splitter at the pump. Use an approved container to transfer the gasoline to the log splitter.

DO NOT fill tank indoors.

DO NOT fill tank when the engine is running or hot.

DO NOT overfill the tank.

⚠ WARNING

Pouring gasoline too fast through the fuel screen may result in blow back of gasoline at the operator while filling.

NOTICE

The engine works well with 10% or less ethanol blended gasoline. When using ethanol-gasoline blends there are some issues worth noting:

- Ethanol-gasoline blends can absorb more water than gasoline alone.
- These ethanol blends can eventually separate, leaving water or a watery goo in the tank, fuel valve and carburetor. The compromised gasoline can be drawn into the carburetor and cause damage to the engine and/or create potential hazards.
- If a fuel stabilizer is used, confirm that it is formulated to work with ethanol-gasoline blends.
- Any damages or hazards caused by using ethanol blended gasoline higher than 10% by volume, improperly stored gasoline, and/or improperly formulated stabilizers, are not covered by manufacturer's warranty.

It is advisable to always shut off the gasoline supply and run the engine to starvation after each use. See *Storage* instructions for extended non-use.

Add Hydraulic Oil

⚠ WARNING

DO NOT remove the hydraulic oil fill cap when the engine is running or hot. Hot oil can escape causing severe burns. Always allow the log splitter to cool completely before removing the hydraulic oil cap.

High fluid pressure and temperatures are created in the hydraulic log splitters. Hydraulic fluid will escape through a pin-size hole opening and can puncture skin.

Inspect hydraulic system regularly for possible leaks. Never check for leaks with your hand while the system is pressurized. Seek medical attention immediately if injured by escaping fluid.

NOTICE

To check oil level, insert the dipstick into fill neck until it stops. Remove and read level. Do not thread dipstick into fill neck when checking oil.

When the outdoor temperature is below 32°F (0°C), Dexron III transmission fluid can be used.

1. Make sure the log splitter is on a flat, level surface.
2. Remove the dipstick (A) from the oil tank.
3. Add 6.0 US qt. (5.7 L) of hydraulic oil - SAE10W / ISO 32
4. Check the hydraulic oil level using dipstick. Oil level should be between the two marks on the dipstick. (A)

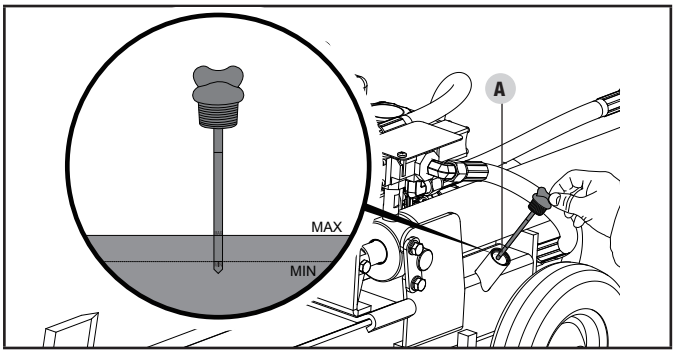

5. Replace and tighten the dipstick.
6. Start engine (see *Starting the Engine* in the *Operation* section).
7. Extend and retract the cylinder to purge air from the hydraulic system. Cylinder motion should be smooth and continuous.
8. Shut-off engine (see *Stopping the Engine* in the *Operation* section).
9. Check the hydraulic oil tank dipstick. Add additional hydraulic oil if needed.
10. Check oil level daily and add as needed.

OPERATION

⚠ DANGER

Always operate log splitter outdoors and far away from building, windows, doors and intake ventilation covers.

⚠ WARNING

ALWAYS use the log splitter for its intended use. The log splitter should only be used to split wood logs, length wise with the grain.

NEVER modify, alter or change the log splitter in anyway. Modifications will void the warranty.

NEVER attach a rope, cable or other device to the control lever on the log splitter.

DO NOT modify or change the engine and operating speeds or pressure settings. These changes can cause safety issues.

ONLY operate the log splitter in daylight.

NEVER operate, or let anyone else operate, the log splitter while under the influence of alcohol, drugs, or medication.

NEVER leave the log splitter unattended while the engine is running.

DO NOT change the splitting position with the engine running. Contact with the muffler can cause serious burns.

DO NOT let the beam drop as it could crush fingers or cause damage to the log splitter.

Before Each Use Inspect the Log Splitter

1. Check the hydraulic oil level and visually inspect all hoses, attachments and cylinder for loose fittings, leaks, cracks, fraying or other damage.
2. DO NOT operate the log splitter if there is any indication of damage.
3. Inspect the engine and make sure the oil level is correct before operating. If the engine is equipped with a spark arrestor, clean and inspect it regularly (follow spark arrestor maintenance schedule).

Log Splitter Location

⚠ WARNING

ALWAYS operate the log splitter outdoors.

NEVER place or operate the log splitter near windows, doors, vents, air intakes or other openings where poisonous engine exhaust fumes could be drawn into occupied building spaces.

Always maintain a minimum distance of 5 ft. (1.5 m) from dry combustible vegetation to prevent fires when operating this log splitter.

Always leave a minimum of 3 ft. (0.9 m) of clearance on all sides of the log splitter to allow for safe operation, adequate cooling, maintenance and servicing.

Always place the log splitter on a firm level surface to provide for good operational footing.

DO NOT work on mud, ice, or in tall grass, brush or snow.

ALWAYS operate log splitter around work zone as shown below.

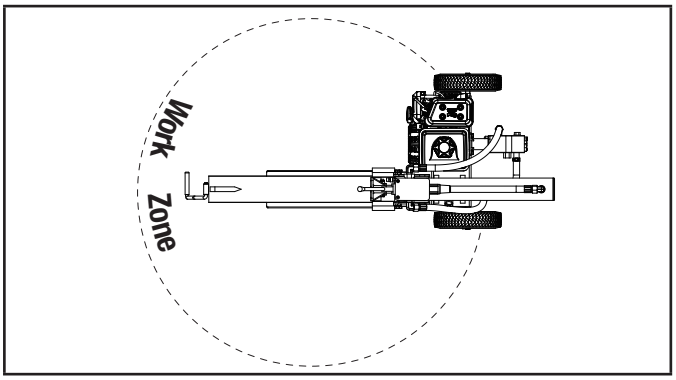

⚠ WARNING

Never place your hand on the ends of the log, between the log and end plate or the log and the splitting wedge.

⚠ WARNING

Only one operator permitted. The adult who loads and stabilizes the log, must be the person who operates the control handle.

Starting the Engine

NOTICE

If the engine starts but does not run make certain that the log splitter is on a flat, level surface. The engine is equipped with a low oil sensor that will prevent the engine from running when the oil level falls below a critical threshold.

1. Make certain the log splitter is on a flat, level surface.
2. Rotate the fuel valve (A) to the “ON” position.
3. Move the choke lever (B) to the “CHOKE” position.

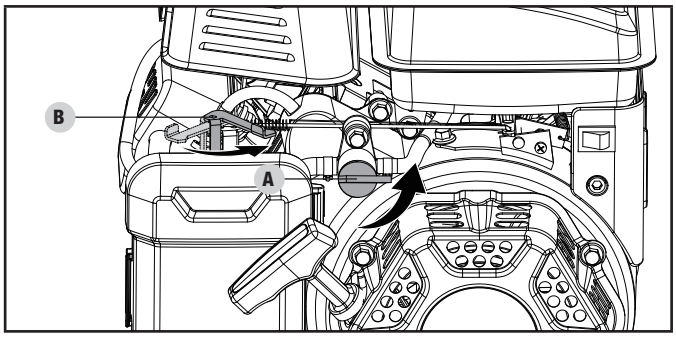

4. Pull the starter cord slowly until resistance is felt and then pull rapidly.
5. Keep choke lever in “CHOKE” position for 2 pulls of the recoil starter. After second pull, move choke lever to the “RUN” position for up to the next 3 pulls of the recoil starter. Too much choke leads to spark plug fouling/engine flooding due to the lack of incoming air. This will cause the engine not to start.
6. As engine warms up, move the choke lever (B) to the “RUN” position.

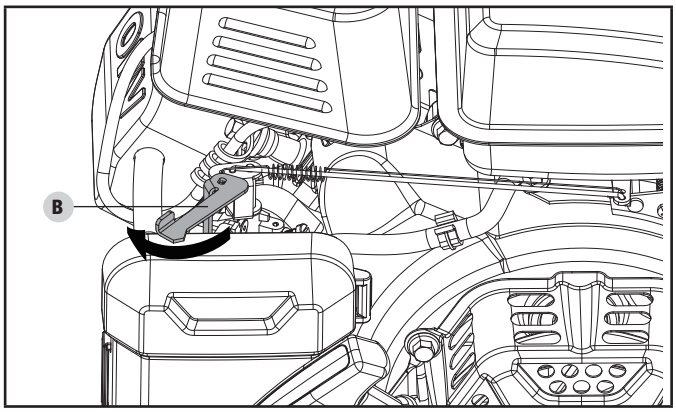

Stopping the Engine

In an emergency, turn the engine switch to the “OFF” position.

NOTICE

Always ensure that the fuel valve and the engine switch are in the “OFF” position when the engine is not in use.

If the engine will not be used for a period of two (2) weeks or longer, please see the *Storage* section for proper engine and fuel storage.

1. Turn the fuel valve (A) to the “OFF” position.

2. Let the engine run until fuel starvation has stopped the engine. This usually takes a few minutes.
3. Turn the engine switch to the “OFF” position.

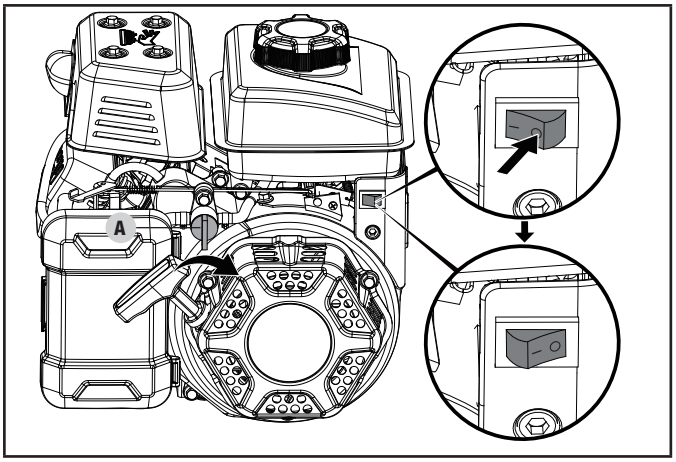

Log Splitter Operation

NOTICE

Back injury can result from lifting logs onto the log splitter if proper lifting techniques are not used.

Always wear safety goggles or safety glasses with side shields, and as necessary a full face-shield as well as full ear protection when operating this product.

Always wear safety shoes or heavy boots when operating the machine.

Always wear nonslip, heavy-duty protective gloves when operating this product.

NOTICE

It is normal for the hydraulic fluid to appear foamy/frothy during operation. This can be caused by agitated oil in the tank collecting air.

NOTICE

If a log gets stuck, embedded or will not split completely, push the control handle in the reverse direction and allow the log splitter to strip the log from the wedge.

ALWAYS keep hands clear of the log and wedge while it is retracting.

NOTICE

The cylinder stroke is designed so the wedge stops approximately 1.5 in. (3.8 cm) from the end plate.

1. Block tires and ensure support leg is secure to prevent unintended movement of the log splitter during operation.
2. Load a log onto the beam against the end plate.
3. Make sure all limbs are clear of crush zones.
4. Push the control valve handle forward (towards the endplate) to split the log.
5. Push the auto control valve handle backward to return the wedge to its original position.
6. Clear the split wood from the work zone.

MAINTENANCE

WARNING

Never operate a damaged or defective log splitter.

WARNING

Improper maintenance will void your warranty.

NOTICE

For Emission control devices and systems, read and understand your responsibilities for service as stated in the Emission Control Warranty Statement of this manual.

Make certain that the log splitter is kept clean and stored properly. Only operate the unit on a flat, level surface in a clean, dry operating environment. DO NOT expose the unit to extreme conditions, excessive dust, dirt, moisture or corrosive vapors. Inspect all air vents and cooling slots to ensure that they are clean and unobstructed.

Clean spark arrester every 100 hours.

Check and tighten all bolts and nuts before operating the log splitter.

The owner/operator is responsible for all periodic maintenance.

Complete all scheduled maintenance in a timely manner.

Correct any issue before operating the log splitter.

For service or parts assistance, contact our Technical Support Team at 1-877-338-0999.

Cleaning the Log Splitter

CAUTION

DO NOT spray engine with water.

Water can contaminate the fuel system and can enter the engine through the cooling slots and damage the engine.

Clear the debris from the beam, wedge and endplate.

Use a damp cloth to clean exterior surfaces of the engine and log splitter.

Use a soft bristle brush to remove excess dirt and oil.
Use an air compressor (25 PSI) to clear dirt and small debris.

Wipe all metal parts with an oily rag to help prevent rust and corrosion.

Changing the Engine Oil

NOTICE

Once oil has been added, a visual check should show oil about 1-2 threads from running out of the fill hole. If using the dipstick to check oil level, DO NOT screw in the dipstick while checking.

Change oil when the engine is warm. Refer to the oil specification to select the proper grade for your operating environment.

1. Remove the oil drain plug with a 10 mm socket (not included) and extension.
2. Allow the oil to drain completely into an appropriate container.
3. Replace the oil drain plug.
4. Remove the oil fill cap/dipstick to add oil.

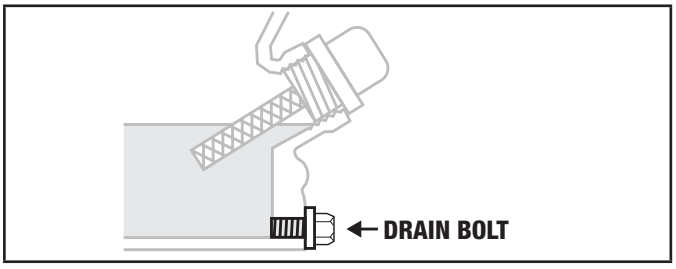

5. Using a funnel, add up to 0.4 US qt. (350 ml) of oil (not included) and replace oil fill cap/dipstick. DO NOT OVERFILL.
6. Dispose of used oil at an approved waste management facility.

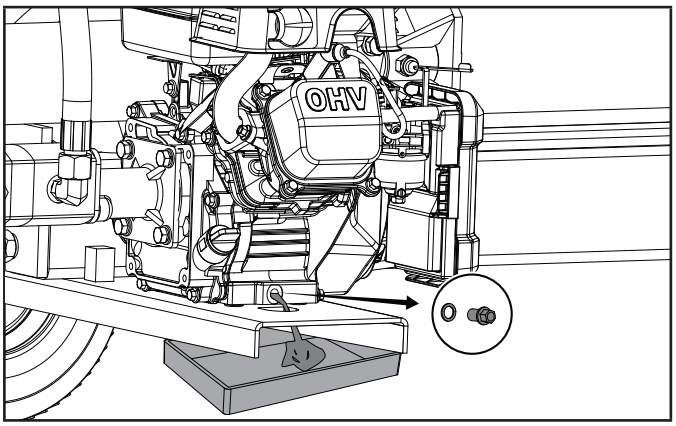

Cleaning and Adjusting the Spark Plug(s)

1. Remove the spark plug cable from the spark plug.
2. Use a spark plug socket tool (included), or a 5/8 in. (16 mm) socket (not included) to remove the plug.
3. Inspect the electrode on the plug. It must be clean and not worn to produce the spark required for ignition.
4. Make certain the spark plug gap is 0.024-0.031 in. (0.6-0.8 mm).

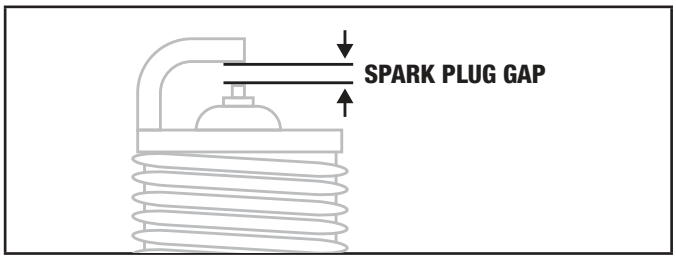

5. Refer to the spark plug types in *Specifications* when replacing the plug.
6. Firmly re-install the plug.
7. Attach the spark plug cable to the spark plug.

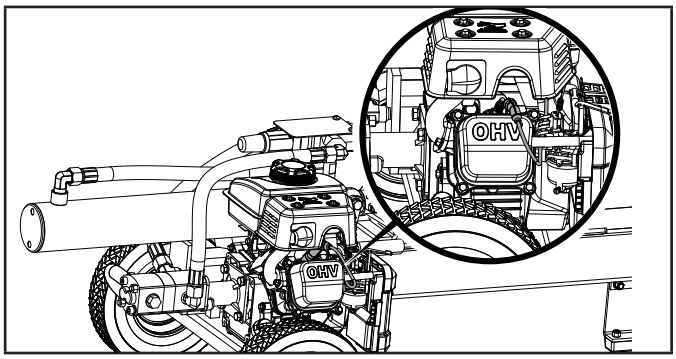

Cleaning the Air Filter

1. Remove the plastic cover by pressing the snap on the side of the cover closest to the wheel, indicated by the arrow.

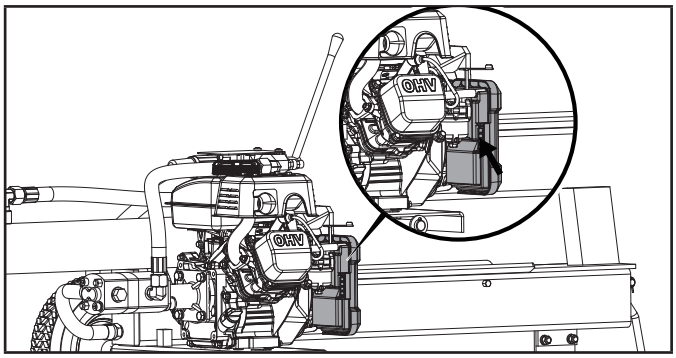

2. Remove the foam element.

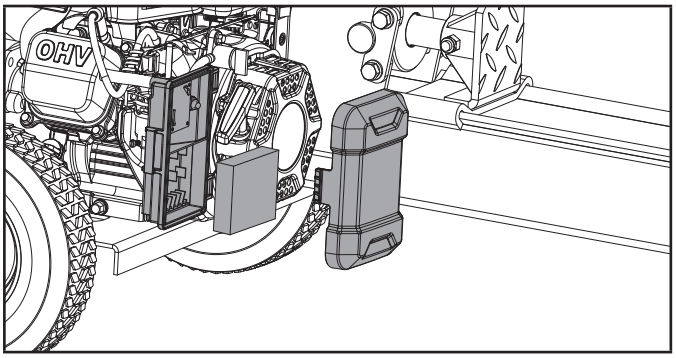

3. Wash in liquid detergent and water. Squeeze thoroughly dry in a clean cloth.
4. Saturate in clean engine oil.
5. Squeeze in a clean, absorbent cloth to remove all excess oil.
6. Place the filter in the assembly.
7. Reattach the filter cover by inserting the tabs on the side closest to the fuel tank then pivot the other side into place. Ensure that the filter cover snaps into place

Changing the Hydraulic Oil

NOTICE

When log splitters are not used for extended periods of time and they are exposed to changing temperature conditions, moisture through condensation can build up inside the tank.

Always shut off the engine, disconnect the spark plug.

1. Begin with the cylinder retracted.
2. Release any stored pressure by moving the valve lever forward and backward several times.
3. Place a container under the hydraulic tank. Make sure it is large enough to hold the contents of the tank. See model specification section of this manual for hydraulic oil capacities.
4. Disconnect the clear suction hose from the pump inlet. (A)
5. Drain oil into a collection pan or proper container.
6. Reattach the clear suction hose to the pump. (A) Securely tighten the clamp of the clear hydraulic hose with either a flat head screw driver or 6mm socket (tighten to 3.65 ± 1.5 lbf-ft [4.95 ± 1.02 Nm]).

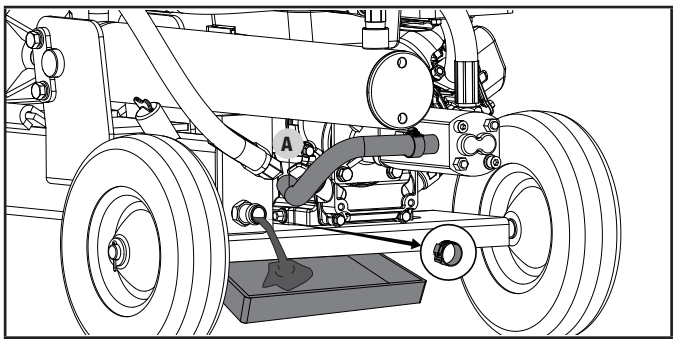

7. Remove dipstick and add up to 192.7 fl. oz. (5.7 L) of hydraulic oil - SAE 10W / ISO 32. Check the hydraulic oil level using dipstick. Oil level should be between the two marks on the dipstick.

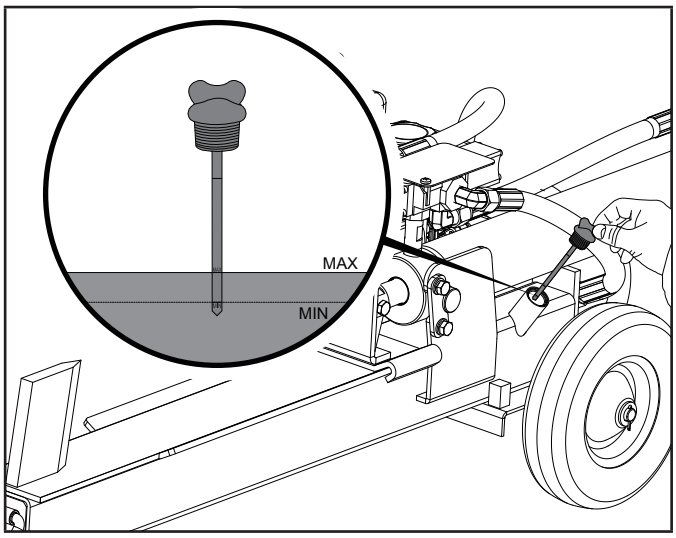

8. Start engine and purge air from hydraulic system. Extend and retract the cylinder to purge air from the hydraulic system. Cylinder motion should be smooth and continuous.

Maintenance Schedule

Follow the service intervals indicated in the following maintenance schedule.

Service your log splitter more frequently when operating in adverse conditions.

Contact our Technical Support Team at 1-877-338-0999 to locate the nearest CPE certified service dealer for your log splitter or engine maintenance needs.

EVERY 8 HOURS OR DAILY
☐ Check engine and hydraulic oil levels
☐ Clean around air intake and muffler

FIRST 5 HOURS

- ☐ Change engine oil

EVERY 50 HOURS OR EVERY SEASON

- ☐ Clean air filter
- ☐ Change engine oil and hydraulic oil if operating under heavy load or in hot environments

EVERY 100 HOURS OR EVERY SEASON

- ☐ Change oil
- ☐ Clean/adjust spark plug
- ☐ Check/adjust valve clearance*
- ☐ Clean spark arrestor
- ☐ Clean fuel tank and filter*
- ☐ Change hydraulic oil

EVERY 250 HOURS

- ☐ Clean combustion chamber*

EVERY YEAR

- ☐ Inspect wheel bearings and repack bearing grease as needed.

EVERY 3 YEARS

- ☐ Replace fuel line*

** To be performed by knowledgeable, experienced owners or CPE certified service centers.*

STORAGE

Refer to the *Maintenance* section for proper cleaning instructions.

⚠ WARNING

Never store the log splitter indoors next to appliances where there is a source of heat or open flame, spark or pilot light because they can ignite gasoline vapors. Even with an empty gas tank, gasoline vapors could ignite.

DO NOT store a log splitter near fertilizer or any corrosive material.

Log Splitter Storage

1. The log splitter needs to be cool for at least 5 minutes before storing.
2. Clean the log splitter before storage according to the *Maintenance* section.
3. Retract the wedge to protect the rod from corrosion.
4. Wipe the beam and wedge with an oily rag to prevent rust and corrosion.

Engine Stored for Less than 30 Days

1. Allow the engine to cool completely before storage.
2. Clean engine according to the *Maintenance* section.
3. To extend the fuel storage life add a properly formulated fuel stabilizer to the tank.

Engines Stored for Over 30 Days

1. Add a properly formulated fuel stabilizer to the tank.
2. Run the engine for a few minutes so the treated fuel cycles through the fuel system and carburetor.
3. The engine needs to cool completely before cleaning and storage.
4. Clean the engine according to the *Maintenance* section.
5. Change the oil.
6. Remove the spark plug and pour about ½ oz (14.8 mL) of oil into the cylinder. Using the Recoil, crank the engine slowly to distribute the oil and lubricate the cylinder.
7. Reattach the spark plug.

SPECIFICATIONS

Log Splitter Specifications

Ram Force	10 US Tons
Cycle Time	20 seconds
Hydraulic Tank Capacity	4.0 US qt.(3.8 L)
Max Log Length	19.3 in. (49 cm)
Max Log Weight	50 lb. (22.7 kg)
Tire Size	10 in. (25.4 cm)
Cylinder Size	3 in. × 17.7 in. (7.5 cm × 45 cm)
Cylinder Rod Size	1.2 in. (3 cm)
Gear Pump	2-stage
Max Pressure	3000 psi
Max Flow Capacity	3 GPM
Control Valve	Detent (auto-return)
Net Weight	143.3 lb. (65 kg)
Height	18.1 in. (46 cm)
Height - Includes control valve handle	24 in. (61 cm)
Width	23.6 in. (60 cm)
Length	53.1 in. (135 cm)

Engine Specifications

Model	R80-VP
Displacement	79 cc
Type	4-Stroke OHV
Start Type	Manual

Engine Oil Specifications

DO NOT OVERFILL.

Type	See Engine oil chart
Capacity	0.4 US qt. (350 ml)

NOTICE

Temperature will affect engine oil and engine performance. Change the type of engine oil used based on temperature shown in *Recommended Engine Oil Type* table.

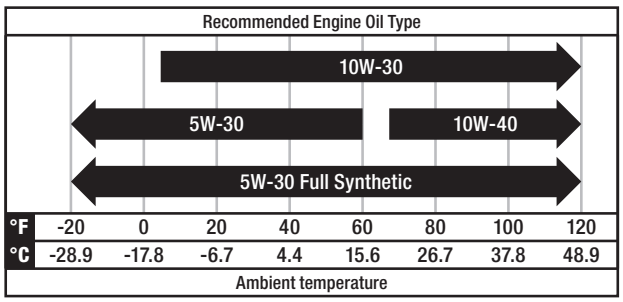

Hydraulic Oil Specifications

Type	See Hydraulic Oil chart
Total System Capacity	6.0 US qt. (5.7 L)

NOTICE

Temperature will affect hydraulic oil and log splitter performance. Change the type of hydraulic oil used based on temperature shown in *Recommended Hydraulic Oil Type* table.

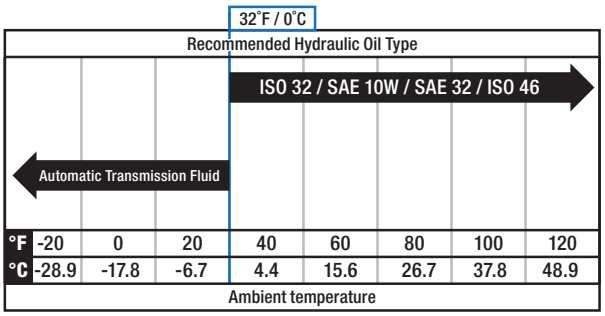

Fuel Specifications

Use regular unleaded gasoline with a minimum octane rating of 87 and an ethanol content of less than 10% by volume. DO NOT USE E15 or E85. DO NOT OVERFILL.

Gasoline Capacity	0.3 gal. (1.29 L)

Spark Plug Specifications

OEM Type	A5RTC
Replacement Type	CR5HSA or equivalent
Gap	0.024-0.031 in. (0.6-0.8 mm)

Valve Specifications

Intake Clearance	0.002-0.0059 in. (0.05-0.15 mm)
Exhaust Clearance	0.002-0.0059 in. (0.05-0.15 mm)

NOTICE

A technical bulletin regarding valve adjustment procedures is available at www.championpowerequipment.com.

Important Message About Temperature

Your product is designed and rated for continuous operation at ambient temperatures up to 104°F (40°C). When your product is needed it may be operated at temperatures ranging from 5°F (-15°C) to 122°F (50°C) for short periods of time. If exposed to temperatures outside this range during storage, it should be brought back within this range before operation. In any event, the product must always be operated outdoors, in a well-ventilated area and away from doors, windows and vents.

TROUBLESHOOTING

Problem	Cause	Solution
Engine will not start.	No fuel.	Add fuel.
	Faulty spark plug.	Replace spark plug.
	Unit loaded during start up.	Remove load from unit.
Engine will not start; Engine starts but runs roughly.	Low oil level.	Fill crankcase to the proper level.
		Place log splitter on a flat, level surface.
	Choke in the wrong position.	Adjust choke.
	Spark plug wire loose.	Attach wire to spark plug.
Engine shuts down during operation.	Out of fuel.	Fill fuel tank.
	Low oil level.	Fill crankcase to the proper level. Place log splitter on a flat, level surface.
Engine cannot supply enough power or overheating.	Insufficient ventilation.	Check for air restriction. Move to a well ventilated area.
Wedge movement is slow or erratic.	Air in the hydraulic oil system.	Purge air by extending and retracting the wedge several times until motion is smooth.
	Debris lodged in beam guides.	Clear debris from beam.
	Low hydraulic oil.	Check oil level and add as needed.
Oil leak from cylinder.	Faulty cylinder rod seal.	Contact Customer Service.
	Scored or bent cylinder rod.	Contact Customer Service.
	Loose hydraulic fitting.	Tighten hydraulic fitting.
	Faulty combination washer seal on cylinder hydraulic fitting.	Contact Customer Service.
Wedge will not extend or retract.	Faulty control valve.	Contact Customer Service.
	Faulty hydraulic pump.	Contact Customer Service.
	Low hydraulic oil.	Check oil level and add as needed.
Excessive bouncing while towing.	Under-inflated tires.	Inflate tires to proper pressure. Refer to tire sidewall.

For further technical support:

Technical Support Team
Toll Free 1-877-338-0999
support@championpowerequipment.com

WARRANTY*

CHAMPION POWER EQUIPMENT

2 YEAR LIMITED WARRANTY

Warranty Qualifications

To register your product for warranty and FREE lifetime call center technical support please visit:

https://www.championpowerequipment.com/register

To complete registration you will need to include a copy of the purchase receipt as proof of original purchase. Proof of purchase is required for warranty service. Please register within ten (10) days from date of purchase.

Repair/Replacement Warranty

CPE warrants to the original purchaser that the mechanical and electrical components will be free of defects in material and workmanship for a period of two years (parts and labor) from the original date of purchase and 180 days (parts and labor) for commercial and industrial use. Transportation charges on product submitted for repair or replacement under this warranty are the sole responsibility of the purchaser. This warranty only applies to the original purchaser and is not transferable.

Do Not Return The Unit To The Place Of Purchase

Contact CPE's Technical Service and CPE will troubleshoot any issue via phone or e-mail. If the problem is not corrected by this method, CPE will, at its option, authorize evaluation, repair or replacement of the defective part or component at a CPE Service Center. CPE will provide you with a case number for warranty service. Please keep it for future reference. Repairs or replacements without prior authorization, or at an unauthorized repair facility, will not be covered by this warranty.

Warranty Exclusions

This warranty does not cover the following repairs and equipment:

Normal Wear

Products with mechanical and electrical components need periodic parts and service to perform well. This warranty does not cover repair when normal use has exhausted the life of a part or the equipment.

Installation, Use and Maintenance

This warranty will not apply to parts and/or labor if the product is deemed to have been misused, neglected, involved in an accident, abused, loaded beyond the product's limits, modified, installed improperly or connected incorrectly to any electrical component. Normal maintenance is not covered by this warranty and is not required to be performed at a facility or by a person authorized by CPE.

Other Exclusions

This warranty excludes:

- Cosmetic defects such as paint, decals, etc.
- Wear items such as filter elements, o-rings, etc.
- Accessory parts such as hoses, storage covers, etc.
- Failures due to acts of God and other force majeure events beyond the manufacturer's control.
- Problems caused by parts that are not original Champion Power Equipment parts.

Limits of Implied Warranty and Consequential Damage

Champion Power Equipment disclaims any obligation to cover any loss of time, use of this product, freight, or any incidental or consequential claim by anyone from using this product. THIS WARRANTY AND THE ATTACHED U.S. EPA and/or CARB EMISSION CONTROL SYSTEM WARRANTIES (WHEN APPLICABLE) ARE IN LIEU OF ALL OTHER WARRANTIES, EXPRESS OR IMPLIED, INCLUDING WARRANTIES OF MERCHANTABILITY OR FITNESS FOR A PARTICULAR PURPOSE.

This warranty gives you certain legal rights which may change from state to state or province to province. Your state or province may also have other rights you may be entitled to that are not listed within this warranty.

Contact Information

Address

Champion Power Equipment, Inc.
6370 S Pioneer Way, Unit 101
Las Vegas, NV 89113 USA
www.championpowerequipment.com

Customer Service

Toll Free: 1-877-338-0999
info@championpowerequipment.com
Fax no.: 1-562-236-9429

Technical Service

Toll Free: 1-877-338-0999
tech@championpowerequipment.com
❗ EMERGENCY 24 HOUR SUPPORT: 1-562-204-1188

*Except as otherwise stipulated in any of the following enclosed Emission Control System Warranties (when applicable) for the Emission Control System: U.S. Environment Protection Agency (EPA) and/or California Air Resources Board (CARB).

CHAMPION POWER EQUIPMENT, INC. (CPE)
AND THE UNITED STATES ENVIRONMENTAL PROTECTION AGENCY (U.S. EPA)
EMISSION CONTROL SYSTEM WARRANTY

Your Champion Power Equipment (CPE) engine complies with U.S. EPA emissions regulations.

YOUR WARRANTY RIGHTS AND OBLIGATIONS:

The US EPA and CPE are pleased to explain the Federal Emission Control Systems Warranty on your 2025 small off-road engine and engine powered equipment. New engines and equipment must be designed, built and equipped, at the time of sale, to meet U.S. EPA regulations for small off-road engines. CPE warrants the emission control system on your small off-road engine and equipment for the period of time listed below, provided there has been no abuse, neglect, unapproved modification, or improper maintenance of your equipment.

Your emission control system may include parts such as the carburetor, fuel-injection system, the ignition system, catalytic converter and fuel lines. Also included may be hoses, belts, connectors and other emission related assemblies. Where a warrantable condition exits, CPE will repair your small off-road engine at no cost to you including diagnosis, parts and labor.

MANUFACTURER'S EMISSION CONTROL SYSTEM WARRANTY COVERAGE:

This emission control system is warranted for two years, subject to provisions set forth below. If, during the warranty period, an emission related part on your engine is defective in materials or workmanship, the part will be repaired or replaced by CPE.

OWNER'S WARRANTY RESPONSIBILITIES:

As the small off-road engine owner, you are responsible for the performance of the required maintenance listed in your Owner's Manual. CPE recommends that you retain all your receipts covering maintenance on your small off-road engine, but CPE cannot deny warranty solely for the lack of receipts or for your failure to ensure the performance of all scheduled maintenance.

As the small off-road engine owner, you should however be aware that CPE may deny you warranty coverage if your small, off-road engine or a part has failed due to abuse, neglect, improper maintenance or unapproved modifications.

You are responsible for presenting your small off-road engine to an Authorized CPE service outlet or alternate service outlet as described in (3)(f.) below, CPE dealer or CPE, Las Vegas, NV. as soon as a problem exists. The warranty repairs should be completed in a reasonable amount of time, not to exceed 30 days.

If you have any questions regarding your warranty rights and responsibilities, you should contact:

Champion Power Equipment, Inc.
Customer Service
6370 S Pioneer Way, Unit 101
Las Vegas, NV 89113
1-877-338-0999
tech@championpowerequipment.com

EMISSION CONTROL SYSTEM WARRANTY

The following are specific provisions relative to your Emission Control System (ECS) Warranty Coverage.

1. **APPLICABILITY:** This warranty shall apply to 1997 and later model year small off-road engines. The ECS Warranty Period shall begin on the date the new engine or equipment is delivered to its original, end-use purchaser, and shall continue for 24 consecutive months thereafter.

2. **GENERAL EMISSIONS WARRANTY COVERAGE**
   CPE warrants to the original, end-use purchaser of the new engine or equipment and to each subsequent purchaser that the ECS when installed is:

   2a. Designed, built and equipped so as to conform to U.S. EPA emissions standards for spark-ignited engines at or below 19 kilowatts.

   2b. Free from defects in materials and workmanship that cause the failure of a warranted part to be identical in all material respects to the part as described in the engine manufacturer's application for certification for a period of two years.

3. **THE WARRANTY ON EMISSION-RELATED PARTS WILL BE INTERPRETED AS FOLLOWS:**

   3a. Any warranted part that is not scheduled for replacement as required maintenance in the Operator's Manual shall be warranted for the ECS Warranty Period. If any such part fails during the ECS Warranty Period, it shall be repaired or replaced by CPE according to Subsection "d" below. Any such part repaired or replaced under the ECS Warranty shall be warranted for any remainder of the ECS Warranty Period.

   3b. Any warranted, emissions-related part which is scheduled only for regular inspection as specified in the Operator's Manual shall be warranted for the ECS Warranty Period. A statement in such written instructions to the effect of "repair or replace as necessary", shall not reduce the ECS Warranty Period. Any such part repaired or replaced under the ECS Warranty shall be warranted for the remainder of the ECS Warranty Period.

   3c. Any warranted, emissions-related part which is scheduled for replacement as required maintenance in the Operator's Manual shall be warranted for the period of time prior to the first scheduled replacement point for that part. If the part fails prior to the first scheduled replacement, the part shall be repaired or replaced by CPE according to Subsection "d" below. Any such emissions-related part repaired or replaced under the ECS Warranty, shall be warranted for the remainder of the ECS Warranty Period prior to the first scheduled replacement point for such emissions-related part.

   3d. Repair or replacement of any warranted, emissions-related part under this ECS Warranty shall be performed at no charge to the owner at a CPE Authorized Service Outlet.

   3e. The owner shall not be charged for diagnostic labor which leads to the determination that a part covered by the ECS Warranty is in fact defective, provided that such diagnostic work is performed at a CPE Authorized Service Outlet.

   3f. CPE shall pay for covered emissions warranty repairs at non-authorized service outlets under the following circumstances:

      i. The service is required in a population center with a population over 100,000 according to U.S. Census 2000 without a CPE Authorized Service Outlet AND

      ii. The service is required more than 100 miles from a CPE Authorized Service Outlet. The 100 mile limitation does not apply in the following states: Alaska, Arizona, Colorado, Hawaii, Idaho, Montana, Nebraska, Nevada, New Mexico, Oregon, Texas, Utah and Wyoming.

   3g. CPE shall be liable for damages to other original engine components or approved modifications proximately caused by a failure under warranty of an emission-related part covered by the ECS Warranty.

   3h. Throughout the ECS Warranty Period, CPE shall maintain a supply of warranted emission-related parts sufficient to meet the expected demand for such emission-related parts.

   3i. Any CPE Authorized and approved emission-related replacement part may be used in the performance of any ECS Warranty maintenance or repair and will be provided without charge to the owner. Such use shall not reduce CPE's warranty obligation.

   3j. Unapproved add-on or modified parts may not be used to modify or repair a CPE engine. Such use voids this ECS Warranty and shall be sufficient grounds for disallowing an ECS Warranty claim. CPE shall not be liable hereunder for failures of any warranted parts of a CPE engine caused by the use of such an unapproved add-on or modified part.

EMISSION-RELATED PARTS INCLUDE THE FOLLOWING: (using those portions of the list applicable to the engine)

Systems covered by this warranty	Parts Description
Fuel Metering System	Fuel regulator, Carburetor and internal parts
Air Induction System	Air cleaner, Intake manifold
Ignition System	Spark plug and parts, Magneto ignition system
Exhaust System	Exhaust manifold, catalytic converter
Miscellaneous Parts	Tubing, Fittings, Seals, Gaskets, and Clamps associated with these listed systems.
Evaporative Emissions	Fuel Tank, Fuel Cap, Fuel Lines (for liquid fuel and fuel vapors), Fuel Line Fittings, Clamps, Pressure Relief Valves, Control Valves, Control Solenoids, Electronic Controls, Vacuum Control Diaphragms, Control Cables, Control Linkages, Purge Valves, Gaskets, Liquid/Vapor Separator, Carbon Canister, Canister Mounting Brackets, Carburetor Purge Port Connector

TO OBTAIN WARRANTY SERVICE:

You must take your CPE engine or the product on which it is installed, along with your warranty registration card or other proof of original purchase date, at your expense, to any Champion Power Equipment dealer who is authorized by Champion Power Equipment, Inc. to sell and service that CPE product during his normal business hours. Alternate service locations defined in Section (3)(f.) above must be approved by CPE prior to service. Claims for repair or adjustment found to be caused solely by defects in material or workmanship will not be denied because the engine was not properly maintained and used.

If you have any questions regarding your warranty rights and responsibilities, or to obtain warranty service, please write or call Customer Service at Champion Power Equipment, Inc.

Champion Power Equipment, Inc.
6370 S Pioneer Way, Unit 101
Las Vegas, NV 89113
1-877-338-0999
Attn.: Customer Service
tech@championpowerequipment.com