OPERATOR'S MANUAL

MODEL #201098
REAR TINE TILLER

ACTIVATE YOUR WARRANTY

by registering your product:
championpowerequipment.com

SERIAL NO.

1·877·338·0999

or visit **championpowerequipment.com**

READ AND SAVE THIS MANUAL. This manual contains important safety precautions which should be read and understood before operating the product. Failure to do so could result in serious injury. This manual should remain with the product.

Specifications, descriptions and illustrations in this manual are as accurate as known at the time of publication, but are subject to change without notice.

4611-M-OP | REV 20260224 | EN

Champion Power Equipment, Inc.

TABLE OF CONTENTS

Introduction **3**

Safety Definitions **3**

Important Safety Instructions **4**
- Fuel Safety 5
- Safety Symbols 7
- Operation Symbols 9
- Quickstart Label Symbols 10
- Safety Labels 11
- Safety Labels 12

Controls and Features **13**
- Tiller 13
- Engine 13
- Parts Included 14
- Tools Included 15

Assembly **16**
- Unpacking 16
- Attach Lower Handle 16
- Install the Wheels 16
- Install the Tines 16
- Install the Tine Shield 17
- Install the Depth Regulator 17
- Attach Upper Handle 17
- Install the Gear Oil Dipstick 17
- Introduction 18
- Wheel Drive Pins 18
- Forward Lever 19
- Reverse Lever 19
- Depth Regulator Lever Adjustment 19
- Handlebar Height Adjustment 20

Operation **20**
- Introduction 20
- Add Engine Oil 20
- Transmission Gear Oil 21
- Add Fuel 21
- Starting the Engine 22
- Stopping the Engine and the Tiller 23
- Operation at High Altitude 23

Tilling Tips and Techniques **24**
- Tilling Depths 24
- Let the Tiller Do the Work 24
- Avoid Tilling Soggy, Wet Soil 24
- Preparing Seedbeds 24
- Cultivating 24
- Tilling on Slopes 24
- Clearing the Tines 24
- Loading and Unloading the Tiller 25

Maintenance **25**
- Cleaning the Tiller 26
- Tiller Lubrication 26
- Check for Oil Leaks 26
- Check Hardware 27
- Transmission Gear Oil Service 27
- Tines 28
- Forward and Reverse Cable Tension Adjustment 29
- Change Forward/Reverse Belts 29
- Engine Cleaning 31
- Air Cleaner Service 31
- Engine Oil Service 32
- Cleaning and Adjusting the Spark Plug(s) 33
- Cleaning the Air Filter 33

Storage **33**
- Tiller Storage 33

Specifications **34**
- Tiller Specifications 34
- Engine Specifications 34
- Fuel Specifications 34
- Spark Plug Specifications 34
- Valve Specifications 34

Troubleshooting **35**
- Difficulty Starting Engine (Recoil) 36
- Gasoline Engine: No Power 37
- Gasoline Engine Running Roughly 37
- Stops Suddenly When Running 38
- Engine is Overheating 38

FOR PARTS BREAKDOWN

Search by model number at
championpowerequipment.com

INTRODUCTION

Congratulations on your purchase of a Champion Power Equipment (CPE) product. CPE designs, builds, and supports all of our products to strict specifications and guidelines. With proper product knowledge, safe use, and regular maintenance, this product should bring years of satisfying service.

Every effort has been made to ensure the accuracy and completeness of the information in this manual at the time of publication, and we reserve the right to change, alter and/or improve the product and this document at any time without prior notice.

Since CPE highly values how our products are designed, manufactured, operated and are serviced, and also highly value your safety and the safety of others, we would like you to take the time to review this product manual and other product materials thoroughly and be fully aware and knowledgeable of the assembly, operation, dangers and maintenance of the product before use. Fully familiarize yourself, and make sure others who plan on operating the product fully familiarize themselves too, with the proper safety and operation procedures before each use. Please always exercise common sense and always err on the side of caution when operating the product to ensure no accident, property damage, or injury occurs. We want you to continue to use and be satisfied with your CPE product for years to come.

When contacting CPE about parts and/or service, you will need to supply the complete model and serial numbers of your product. Transcribe the information found on your product's nameplate label to the table below

CPE TECHNICAL SUPPORT TEAM
1-877-338-0999
MODEL NUMBER
201098
SERIAL NUMBER
DATE OF PURCHASE
PURCHASE LOCATION

SAFETY DEFINITIONS

The purpose of safety symbols is to attract your attention to possible dangers. The safety symbols, and their explanations, deserve your careful attention and understanding. The safety warnings do not by themselves eliminate any danger. The instructions or warnings they give are not substitutes for proper accident prevention measures.

⚠ DANGER

DANGER indicates a hazardous situation which,if not avoided, will result in death or serious injury.

⚠ WARNING

WARNING indicates a hazardous situation which, if not avoided, could result in death or serious injury.

⚠ CAUTION

CAUTION indicates a hazardous situation which, if not avoided, could result in minor or moderate injury.

NOTICE

NOTICE indicates information considered important, but not hazard-related (e.g., messages relating to property damage).

IMPORTANT SAFETY INSTRUCTIONS

⚠ WARNING

Cancer and Reproductive Harm – www.P65Warnings.ca.gov

⚠ DANGER

Tiller exhaust contains carbon monoxide, a colorless, odorless, poisonous gas. Breathing carbon monoxide will cause nausea, dizziness, fainting or death. If you start to feel dizzy or weak, get to fresh air immediately.

OPERATE THE TILLER OUTDOORS ONLY IN A WELL VENTILATED AREA AND POINT EXHAUST AWAY.

NEVER operate the tiller inside any building, including garages, basements, sheds or other confined spaces.

DO NOT allow exhaust fumes to enter a confined area through windows, doors, vents or other openings while operating the tiller.

⚠ DANGER

Using an engine indoors **CAN KILL YOU IN MINUTES**. Engine exhaust contains carbon monoxide. This is a poison you cannot see or smell.

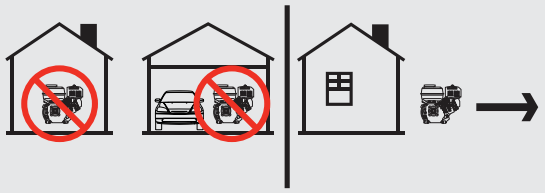

⚠ DANGER

DO NOT allow untrained individuals or children to use this unit.

⚠ DANGER

Rotating parts can entangle hands, feet, hair, clothing and/or accessories. Traumatic amputation or severe laceration can result.

Keep hands and feet away from rotating parts.

Tie up long hair and remove jewelry.

Operate equipment with guards in place.

DO NOT wear loose-fitting clothing, dangling drawstrings or items that could become caught.

⚠ WARNING

Before operating your machine, carefully read and understand all safety, controls and operating instructions in this Operator's Manual.

Failure to follow these instructions can result in serious personal injury

⚠ WARNING

- Clear the work area before each use. Remove all objects such as rocks, broken glass, nails, wire, or string which can be thrown or become entangled in the machine.
- Always wear eye protection with side shields marked to comply with ANSI Z87.1. Failure to do so could result in objects being thrown into your eyes and other possible serious injuries.
- Keep all bystanders, children, and pets at least 50' (15m) away when operating the tiller.
- Always wear sound protection (ear mufflers or ear plugs) to reduce the risk of hearing loss associated with long term engine sound level(s).
- Always wear heavy long pants, boots, gloves, and a long-sleeve shirt. Do not wear loose clothing, jewelry, short pants, sandals, or go barefoot. Secure long hair so it is above shoulder level to prevent entanglement in rotating parts.
- Do not operate this unit when you are tired, ill, or under the influence of alcohol, drugs, or medication.
- Do not operate in poor lighting.
- Always wear a face filter mask in dusty conditions to reduce the risk of injury associated with the inhalation of dust.
- Keep firm footing and balance. Maintain a firm grip on the handle with both hands while using the tiller.
- Do not overreach. Overreaching can result in loss of balance or exposure to hot contact surfaces or rotating parts.
- Always inspect the unit before each use for loose fasteners, fuel leaks, etc. Replace damaged parts.
- Use only identical manufacturer's replacement parts and accessories. Use of any other replacement parts may create a hazard or cause product damage and void your warranty.
- Maintain the equipment per maintenance instructions located in this Operator's Manual

⚠ DANGER

Rotating blades can cause severe bodily injury. Stop the engine and ensure blades have stopped rotating before installing/changing parts or performing maintenance.

⚠ WARNING

Never till near underground electric cables, telephone lines, pipes or hoses.

It is recommended to contact your utility provider or diggers hotline in your area before tilling the ground.

⚠ WARNING

Sparks can result in fire or electrical shock.

When servicing the tiller:

Disconnect the spark plug wire and place it where it cannot contact the plug or any other metal object.

DO NOT check for spark with the plug removed.

Use only approved spark plug testers.

⚠ WARNING

Running engines produce heat. Severe burns can occur on contact. Combustible material can catch fire on contact.

DO NOT touch hot surfaces.

Avoid contact with hot exhaust gases.

Allow equipment to cool before touching.

Maintain at least 3 ft. (91.4 cm) of clearance on all sides to ensure adequate cooling.

Maintain at least 5 ft. (1.5 m) of clearance from combustible materials.

⚠ WARNING

Rapid retraction of the recoil cord will pull hand and arm towards the engine faster than you can let go. Broken bones, fractures, bruises or sprains could result. Unintentional startup can result in entanglement, traumatic amputation or laceration.

When starting engine, pull the recoil cord slowly until resistance is felt and then pull rapidly to avoid kickback.

⚠ CAUTION

Prolonged exposure to vibrations, also known as vibration white finger, through use of gasoline-powered equipment, such as this tiller, could cause blood vessel or nerve damage in fingers, hands, and joints. If symptoms occur such as numbness, or loss of feeling in the fingers, hands, or joints, discontinue the use of this tiller and seek medical attention.

Fuel Safety

⚠ DANGER

GASOLINE AND GASOLINE VAPORS ARE HIGHLY FLAMMABLE AND EXPLOSIVE.

Fire or explosion can cause severe burns or death.

Gasoline and gasoline vapors:

- Gasoline vapors are highly flammable and explosive.
- Gasoline vapors can cause a fire or explosion if ignited.
- Gasoline is a liquid fuel and the resulting gasoline vapors can ignite and cause a fire or explosion.
- Gasoline is a skin irritant and needs to be cleaned up immediately if spilled on skin or clothes.
- Gasoline has a distinctive odor, this will help detect potential leaks quickly.
- In any petroleum gas fire, flames should not be extinguished unless by doing so the fuel supply valve can be turned OFF. This is because if a fire is extinguished and a supply of fuel is not turned OFF, then an explosion hazard could be created.
- Gasoline vapors expand and contract with ambient temperatures. Never fill the gasoline tank past the red FULL indicator on the fuel filter, as gasoline vapors needs room to expand if temperatures rise.

⚠ WARNING

When adding or removing gasoline:

Do not light or smoke cigarettes.

Always stop the engine and allow to cool for a minimum of two minutes before refueling.

Always loosen gasoline cap slowly to release vapor pressure and to keep fuel from escaping around the gasoline cap.

Always replace and tighten the gasoline cap securely after fueling.

Never remove the gasoline cap or add gasoline while the engine is running or when the engine is hot.

Only fill or drain gasoline outdoors in a well-ventilated area.

Do not pump gasoline directly into the tiller at the gas station.

Always store gasoline in an EPA/CARB compliant container or to transfer the gasoline to the tiller.

Do not overfill the gasoline tank.

Always keep gasoline away from sparks, open flames, pilot lights, heat and other sources of ignition.

⚠ WARNING

When starting the tiller:

Do not attempt to start a damaged tiller.

Always check that the gasoline cap, air filter, spark plug, fuel lines and exhaust system are properly in place.

Always allow spilled gasoline to evaporate fully before attempting to start the engine.

Always be certain that the tiller is resting firmly on level ground.

⚠ WARNING

When operating the tiller:

Do not move or tip the tiller during operation.

⚠ WARNING

When transporting or servicing the tiller:

Always check that the fuel valve is in the OFF position and the gasoline tank is empty.

Disconnect the spark plug wire.

⚠ WARNING

When storing the tiller:

Always store away from sparks, open flames, pilot lights, heat and other sources of ignition.

Never store tiller or gasoline near furnaces, water heaters, or any other appliances that produce heat or have automatic ignitions.

⚠ WARNING

Never use a gasoline container, gasoline tank, or any other fuel item that is broken, cut, torn or damaged.

Safety Symbols

Some of the following symbols may be used on this product. Please study them and learn their meaning. Proper interpretation of these symbols will allow you to more safely operate the product.

SYMBOL	MEANING
	Read Operator's Manual. To reduce the risk of injury, user must read and understand operator's manual before using this product.
	Eye and Ear Protection. Always wear safety goggles or safety glasses with side shields, and as necessary a full face-shield as well as full ear protection when operating this product. Always wear eye protection with side shields marked to comply with ANSI Z87.1.
	Footwear. Always wear safety shoes or heavy boots when operating the machine.
	Gloves. Always wear nonslip, heavy-duty protective gloves when operating this product.
	Safety Alert. This machine was built to be operated according to the safe operation practices in this manual. As with any type of power equipment, carelessness or error on the part of the operator can result in serious injury. This machine is capable of amputating fingers, hands, toes and feet and throwing foreign objects. Failure to observe the safety instructions could result in serious injury or death.
	Risk of Fire. Fuel and its vapors are extremely flammable and explosive. Fire can cause severe burns or death. Do not add fuel while the product is operating or still hot.
	Hot Surface. To reduce the risk of injury or damage, avoid contact with any hot surface.
	Open Flame Alert. Fuel and its vapors are extremely flammable and explosive. Keep fuel away from smoking, open flames, sparks, pilot lights, heat, and other ignition sources.

SYMBOL	MEANING
	Toxic Fumes. The engine exhaust from this product contains chemicals known to cause cancer, birth defects and other reproductive harm. **Risk of Asphyxiation.** This engine emits carbon monoxide, an odorless, colorless poison gas. Breathing carbon monoxide can cause nausea, fainting or death. Use only in a well-ventilated area.
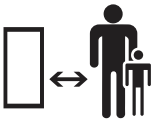	**Clearance.** Keep all objects including others at least 10 feet (3m) from this machine. Only one person should operate the tiller and load the logs.
	Rotating Tines. Avoid injury from rotating tines. Keep hands away.
	Rotating Tines. Avoid injury from rotating tines. Keep feet away.
	Reverse tilling. DO NOT till in reverse
	Thrown Objects. This machine may pick up and throw objects which can cause serious personal injury.

Operation Symbols

Some of the following symbols may be used on this product. Please study them and learn their meaning. Proper interpretation of these symbols will allow you to more safely operate the product.

SYMBOL	MEANING
	Choke Lever **CHOKE:** left position **RUN:** right position
	Fuel Valve **CLOSED:** left position **OPEN:** right position
	Throttle Lever **FAST:** left position
	Throttle Lever **SLOW:** right position
	Stop
	Gasoline Tank: Full
	Gasoline Tank: Empty

SYMBOL	MEANING
	Forward
	Reverse
	Engage Wheels and Tines.
	Disengage Wheels and Tines.
	Transmission Gear Oil. API rated GL-4 or GL-5 Viscosity of SAE 140, SAE 85W-140 or SAE 80W-90.
	Engine Oil. 10W-30

Quickstart Label Symbols

Some of the following symbols may be used on this product. Please study them and learn their meaning. Proper interpretation of these symbols will allow you to more safely operate the product.

Starting the Engine

1. Check Oil Level. Recommended oil is 10W-30. The engine can be seriously damaged without oil. Always check the oil level before using. The machine must be resting firmly on level ground when checking.
2. Add gasoline with a minimum octane rating of 87 and an ethanol content of less than 10% by volume.
3. Move the **choke lever** to “CHOKE” position.
4. Move the **throttle lever** to “FAST” position.
5. Move the **fuel valve** to “OPEN” position.
6. Pull **starter cord**.
7. Move the **choke lever** to “RUN” position.

Stopping the Engine

In an emergency, turn the engine switch to the “OFF” position.

Under normal operation:

1. Turn the **fuel valve** to the “OFF” position.
2. Let the engine run until fuel starvation has stopped the engine. This usually takes few minutes.

Important: Always ensure that the **fuel valve** is in the “OFF” position when the engine is not in use.

Safety Labels

These labels warn you of potential hazards that can cause serious injury. Read them carefully.

If a label comes off or becomes hard to read, contact Technical Support Team for possible replacement.

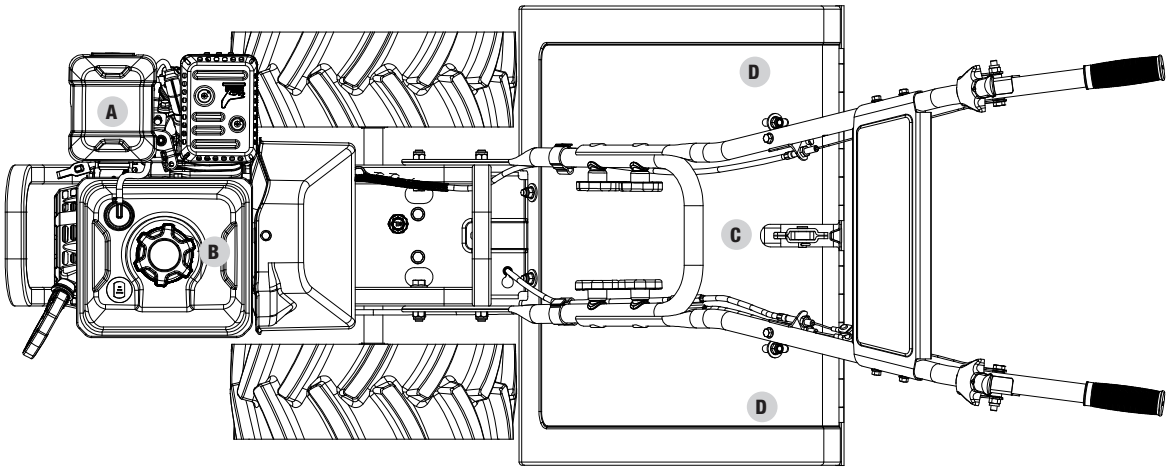

	LABEL	DESCRIPTION
A		Hot Surface
B		Fuel
C		Safety Icons
D		Safety Icons

Safety Labels

These labels warn you of potential hazards that can cause serious injury. Read them carefully.

If a label comes off or becomes hard to read, contact Technical Support Team for possible replacement.

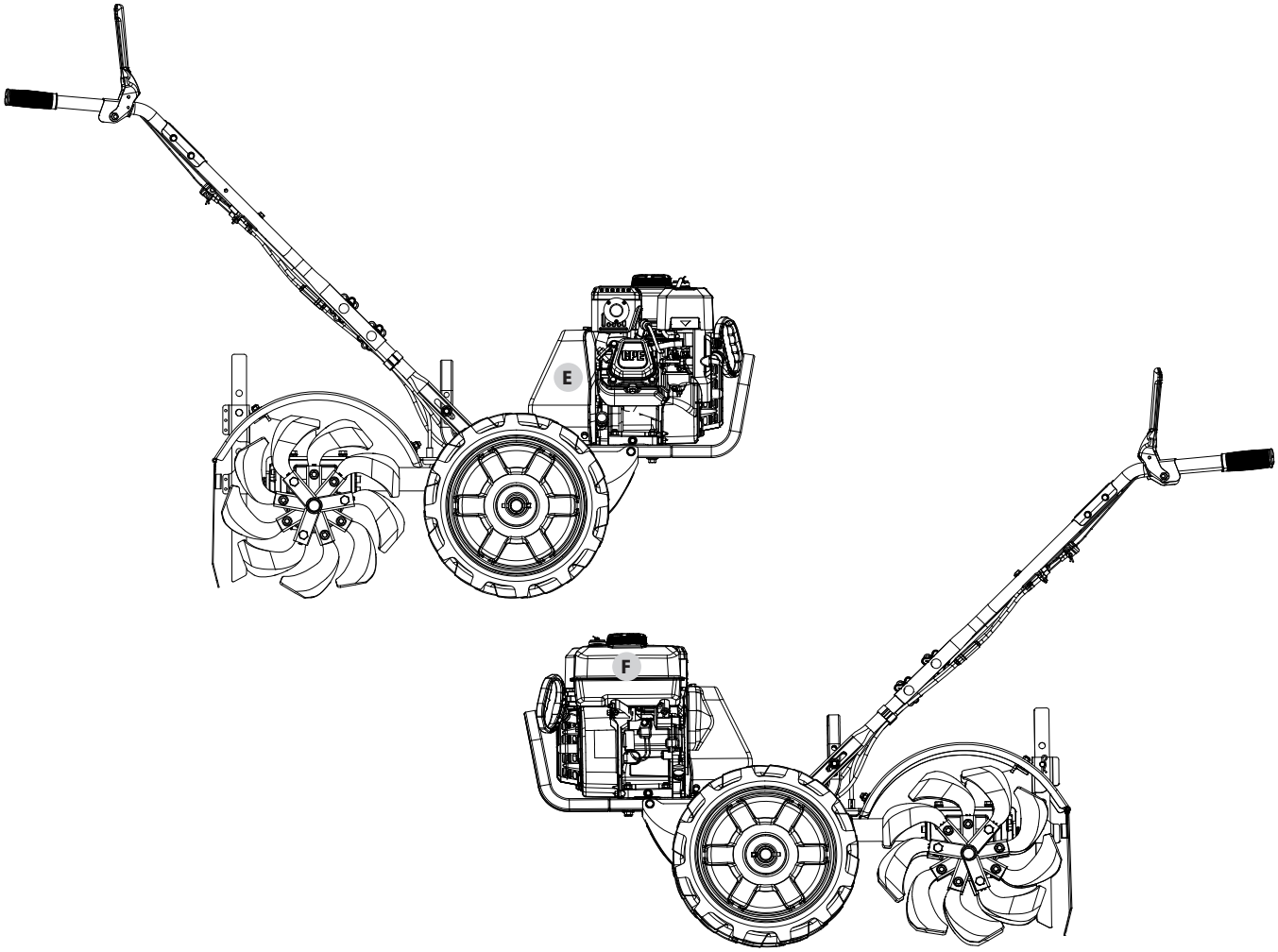

	LABEL	DESCRIPTION
E	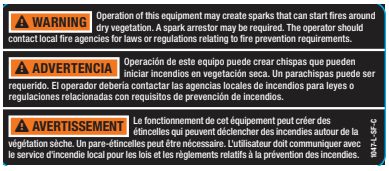	Combustion
F		Safety Icons

CONTROLS AND FEATURES

Read this operator's manual before operating your tiller. Familiarize yourself with the location and function of the controls and features. Save this manual for future reference.

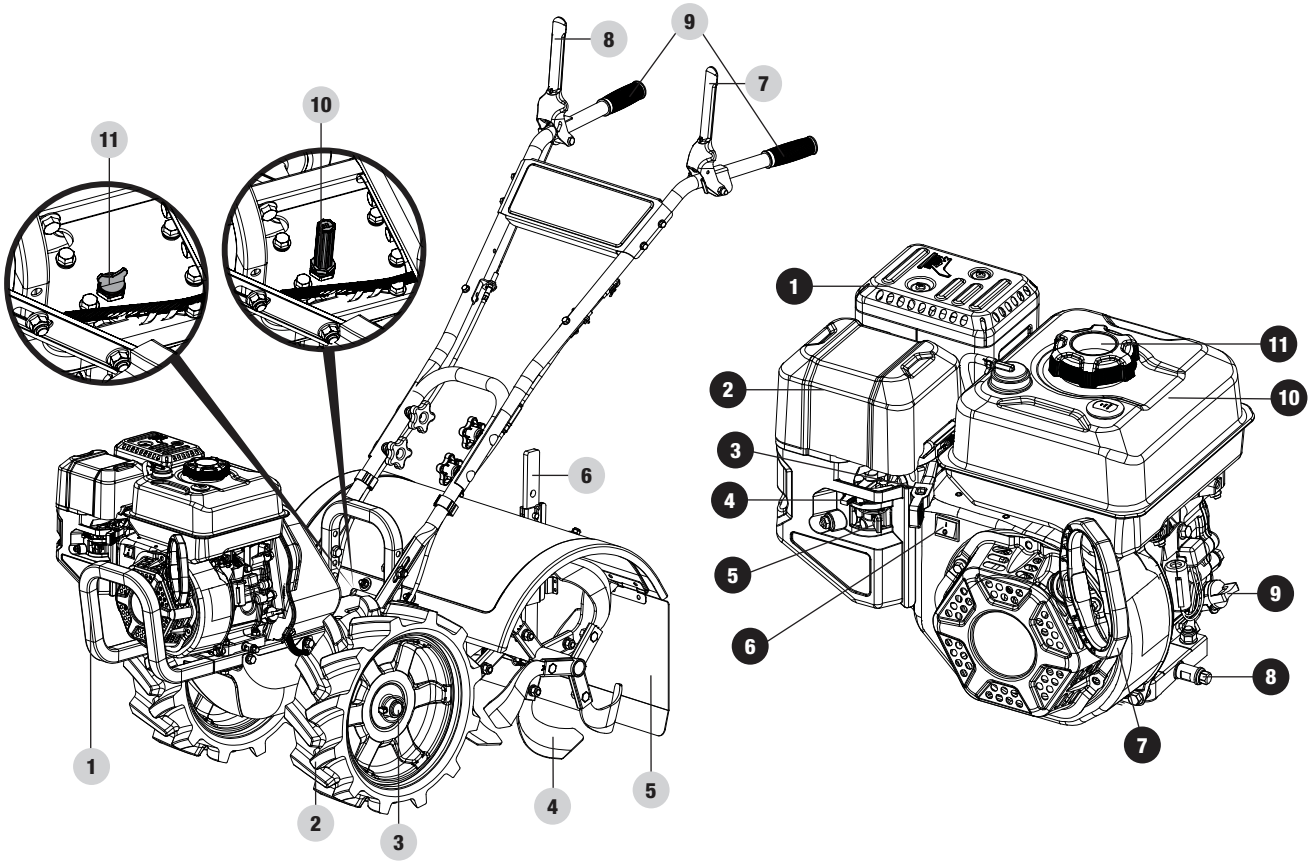

Tiller

1. Front Bumper
2. Wheels
3. Wheel Lock Pins
4. Tines
5. Tine Shield
6. Depth Regulator Lever
7. Reverse Lever
8. Forward Lever
9. Handlebars
10. Gear Oil Dipstick
11. Shipping Plug

Engine

1. **Muffler**
2. **Air Filter** – Protects the engine by filtering dust and debris from the intake air.
3. **Throttle**
4. **Choke** – Used to start the engine.
5. **Fuel Valve** – Used to turn fuel supply on and off to engine.
6. **Engine Off Switch**
7. **Recoil Starter** – Used to manually start the engine.
8. **Oil Drain Bolt** – Used to drain the oil.
9. **Oil Fill Cap/Dipstick** – Used to check and fill oil level.
10. **Gasoline Tank** – 0.82 gal. (3.1 L)
11. **Gasoline Tank Cap**

Parts Included

Accessories

Engine Oil [0.5 US qt. (500 mL)] 1
Oil Funnel 1

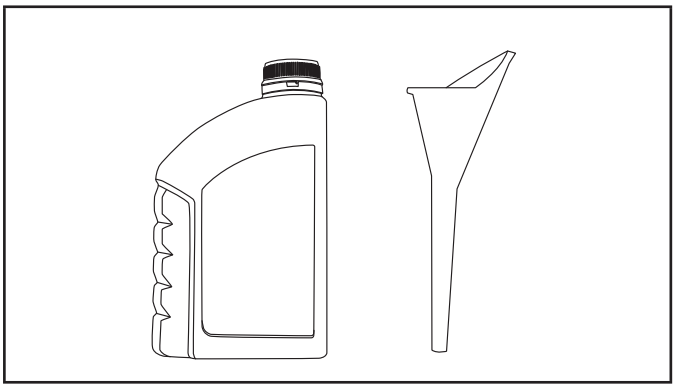

Assembly Parts

Part	Part Qty.	Hardware Needed	Hardware Qty.	Hardware Reference	Tool Needed
Lower Handle	1	M10x45 hexagon flange bolt (preassembled)	4	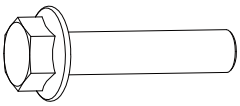	14mm wrench
		M10 nylon lock nut (preassembled)	4	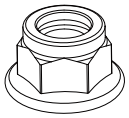	15mm wrench
Wheel	2	Spring lock pin (preassembled)	2	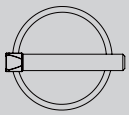	N/A
Tine	2	Pin Ø10x40 (preassembled)	2	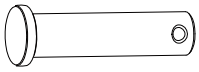	N/A
		B pin (preassembled)	2	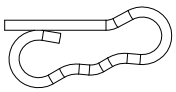	N/A
Tine Shield	1	M8 nut (preassembled)	4		13mm wrench
		Washer (preassembled)	4	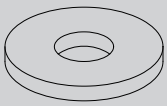	N/A

Part	Part Qty.	Hardware Needed	Hardware Qty.	Hardware Reference	Tool Needed
Depth Regulator	1	Pin Ø10x25 (preassembled)	1	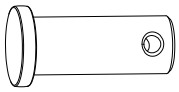	N/A
		R pin (preassembled)	1	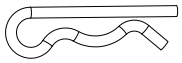	N/A
Upper Handle	1	M8x50 curved head bolt	4	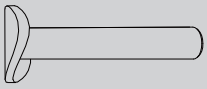	N/A
		Curved Washer	4		N/A
		Handle knob nut	4	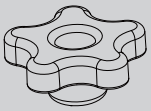	N/A
Gear Oil Dipstick	1			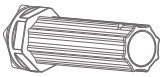	N/A

Tools Included

Spark Plug Wrench.....1

ASSEMBLY

Your tiller requires some assembly. This unit ships from our factory without oil. It must be properly serviced with fuel and oil before operation.

If you have any questions regarding the assembly of your tiller, call our Technical Support Team at 1-877-338-0999. Please have your serial number and model number available.

Unpacking

1. Remove all parts and packaging components.
2. Remove top lid and remove sides.
3. Remove any remaining packaging.
4. With helper, remove the tiller from the shipping crate.

Attach Lower Handle

1. Align the bottom hole of the handle with the bolt hole on the horizontal portion of the frame. From the inside of the frame tube, insert a M10 x 45 flange bolt completely through the frame and handle on each side. Thread a M10 nylon lock nut onto each bolt and hand tighten.
2. Align the upper hole of the handle with the middle height adjustment hole on the vertical portion of the frame. From the inside of the frame tube, insert a M10 x 45 flange bolt completely through the frame and handle on each side. Thread a M10 nylon lock nut onto each bolt and tighten securely using a 14mm socket or wrench and a 15mm socket or wrench.

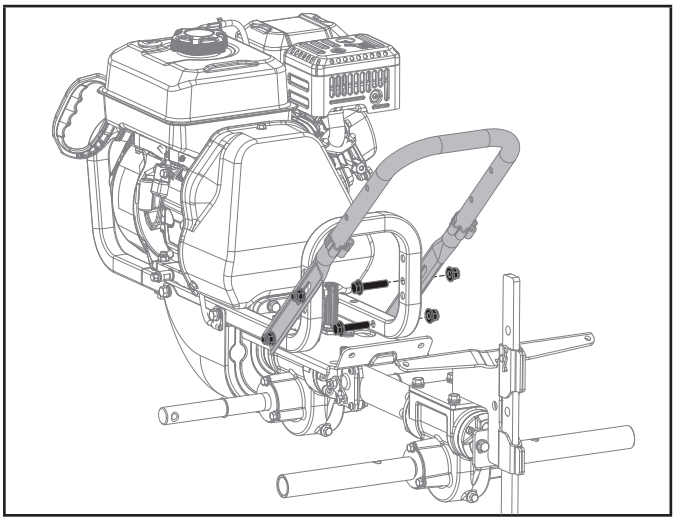

3. Using a 14mm socket or wrench and a 15mm socket or wrench, securely tighten the bottom nuts and bolts.

Install the Wheels

1. Remove the locking pins from the wheel hubs.
2. The tiller wheels are directional. For best performance install the wheels with the tire thread facing the direction as shown.
3. Slide the wheel hub onto the wheel axle.
4. Align the wheel hub hole with the hole in the axle and insert the locking pin.
5. Rotate the locking pin ring to lock the pin in position. Repeat on other wheel.

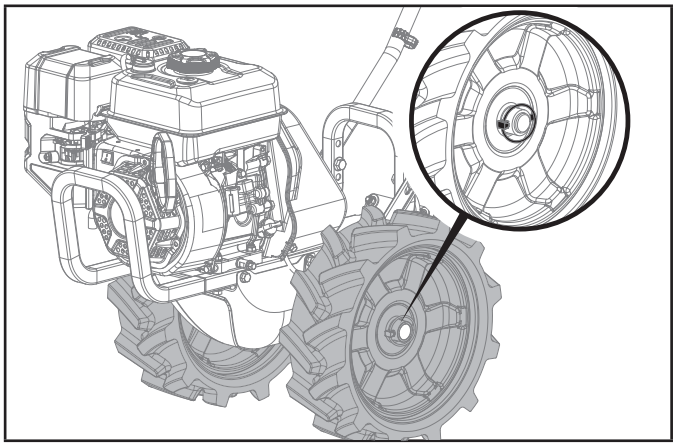

Install the Tines

1. Check the orientation of the tine blade. The sharp cutting edge should be facing the direction of tine rotation for your tiller.
2. Install the tine assemblies on each tine axle. Secure with (2) pins and (2) B pins. Bend B pins once inserted to prevent them from coming out.

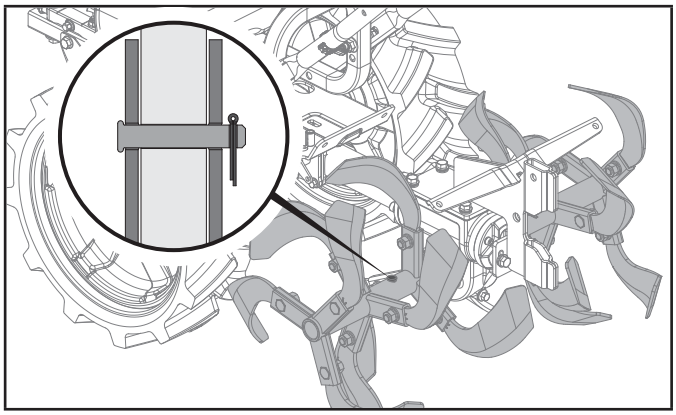

Install the Tine Shield

1. Remove the (4) M8 nuts and (4) washers installed in the tine shield brackets above the transmission housing and tines.
2. Place the tine shield on the brackets and secure with the nuts removed in step 1.

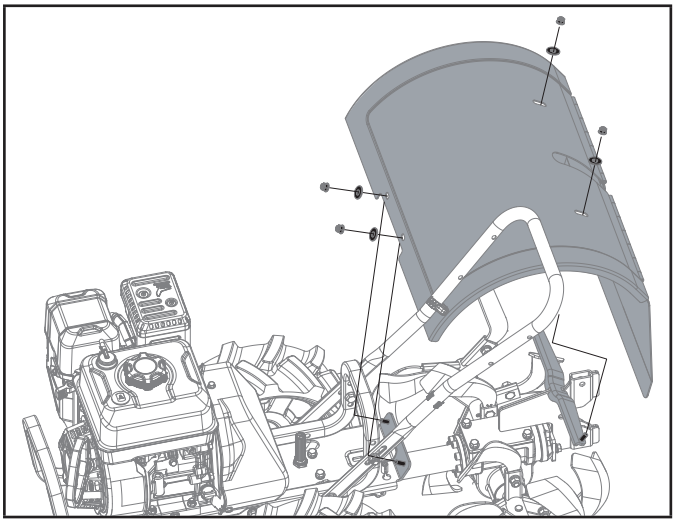

Install the Depth Regulator

1. Remove the (1) pin and (1) R pin from the depth regulator bracket.
2. Insert the depth regulator into the bottom of the depth regulator bracket.
3. Insert the pin through the bracket and lever.
4. Install the R pin removed in step 1 into the pin to lock all components in place.

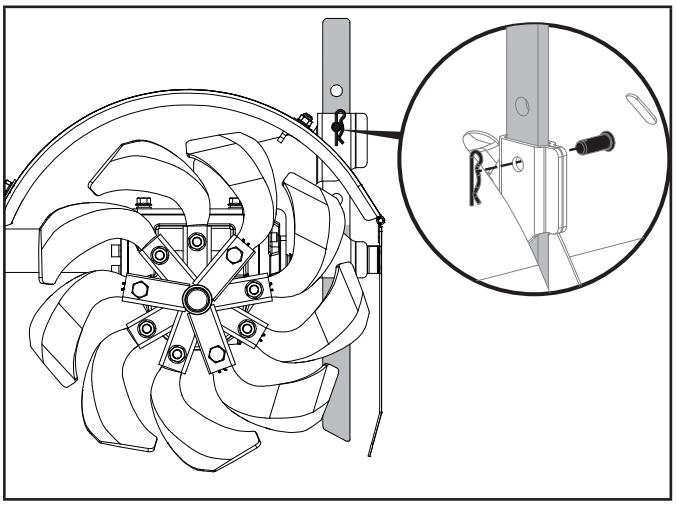

Attach Upper Handle

1. Slide the upper handle down over the lower handle and align the holes.
2. Insert the (4) M8×50 curved head bolts into the holes as shown and securely with the (4) handle knobs and (4) curved Washer.
3. Tighten the handle knobs securely.

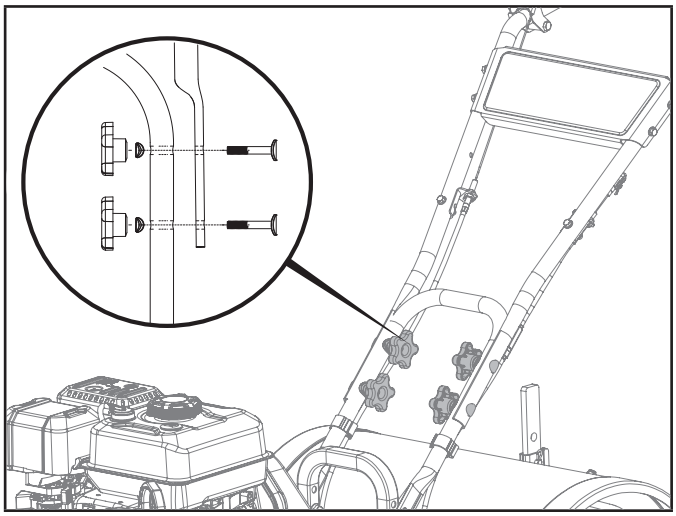

⚠ WARNING

Before operating your machine, carefully read and understand all safety, controls and operating instructions.

Failure to follow these instructions can result in serious personal injury.

Install the Gear Oil Dipstick

1. Unscrew the shipping plug.

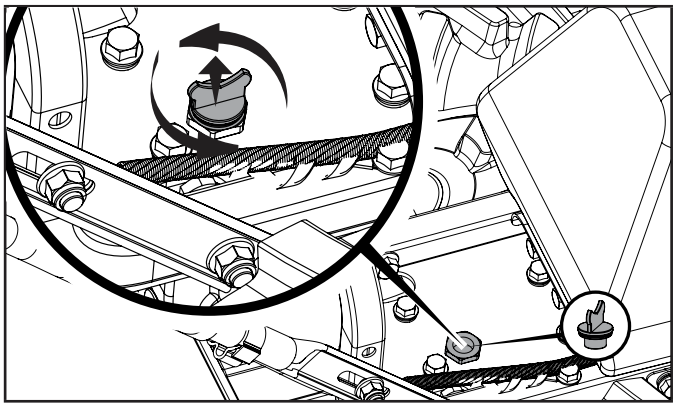

2. Remove the Gear Oil Dipstick from the plastic bag.

3. Screw the Gear Oil Dipstick into the top of the gear box by hand. Do not overtighten.

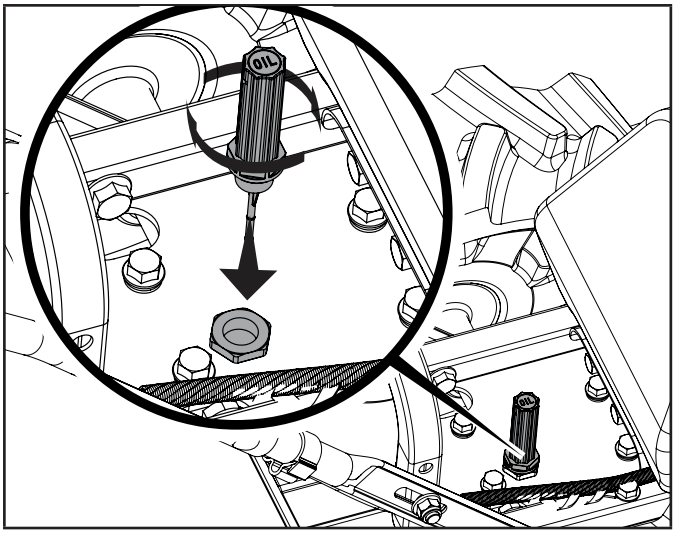

Introduction

This section describes the location and function of the controls on your tiller. Refer to the following Section, Operation, for detailed operating instructions.

Practice using these controls, with the engine shut off, until you understand the operation of the controls and feel confident with each of them.

Wheel Drive Pins

Each wheel is equipped with a locking pin that secures the wheel to the wheel shaft. The wheels can be positioned in either a WHEEL DRIVE or a FREEWHEEL mode.

Before starting the engine, put both wheels in the WHEEL DRIVE position by inserting the wheel drive pins through the wheel hubs and axle shaft. Doing so “locks” the wheels to the axle shaft, causing the wheels to turn when either the forward or reverse lever is engaged.

Use the FREEWHEEL mode only when the engine is not running. In FREEWHEEL, the wheel locking pins are placed only through the holes in the wheel shaft (not the wheel hubs), thus allowing the wheels to turn freely when you manually move the tiller

⚠ WARNING

Never allow either of the wheels to be in the FREEWHEEL position when the engine is running. Always put both wheels in the WHEEL DRIVE position before starting the engine.

Failure to comply could cause loss of tiller control, property damage, or personal injury.

To replace the wheels in the WHEEL DRIVE or FREEWHEEL:

1. Stop the engine, disconnect the spark plug wire from the spark plug and allow engine to cool.
2. Raise one wheel about 1 in. (2.5 cm) off the ground and place a sturdy support under the transmission.

⚠ WARNING

Do not place tiller on its side when changing wheel drive positions. Doing so could result in gasoline leaking from the fuel tank.

Failure to follow this instruction could result in personal injury or property damage.

FOR WHEEL DRIVE MODE: Slide wheel outward and align the holes. Insert locking pin through wheel hub and wheel shaft. Secure wheel locking pin by pushing in as far as it will go then wrapping ring around the wheel shaft as shown. Repeat with the other wheel and then remove the support from beneath the transmission.

WHEEL DRIVE POSITION

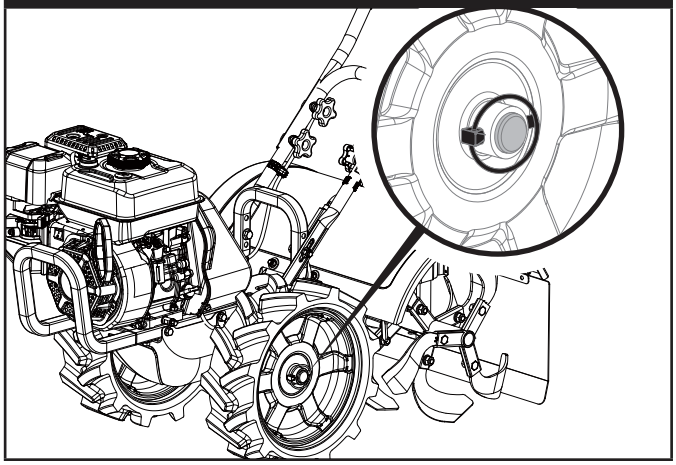

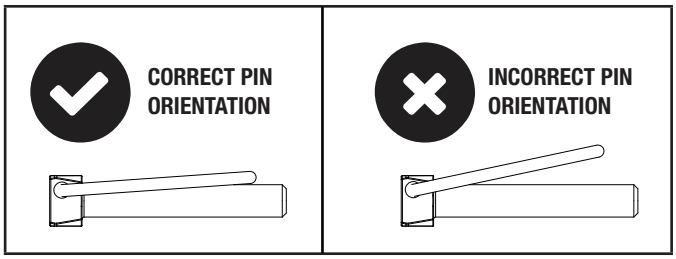

NOTICE

Ensure that the ring on the wheel pin is folded over completely against the pin. Failure to do so could cause the wheel pin to fall out of the hole and the wheel to slide off of the axle during use.

FOR FREEWHEEL MODE: Slide the wheel inward and insert the wheel drive locking pin only through the hole in the axle shaft. Secure wheel locking pin by pushing in as far as it will go then wrapping ring around the wheel shaft as shown. Repeat for the other wheel and then remove the support from beneath the transmission.

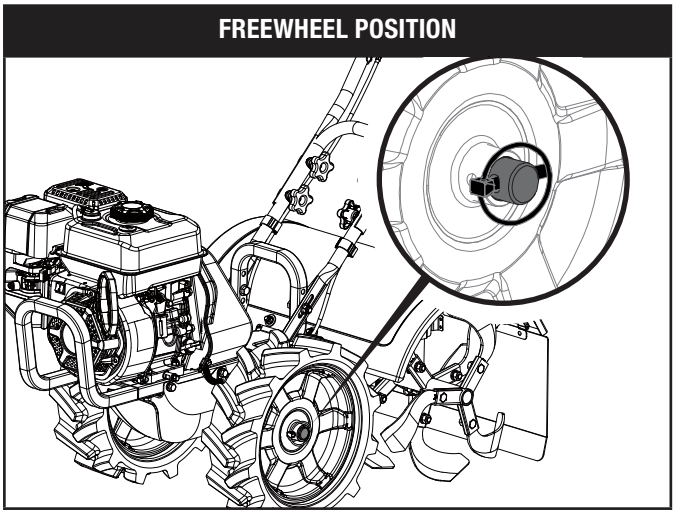

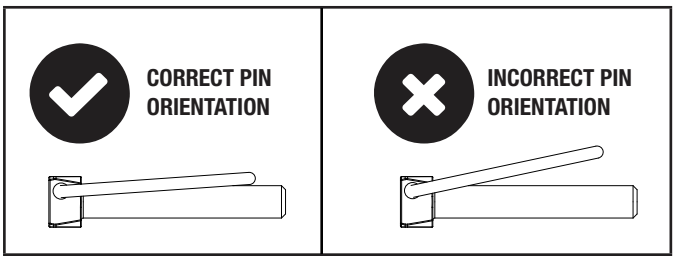

NOTICE

Ensure that the ring on the wheel pin is folded over completely against the pin. Failure to do so could cause the wheel pin to fall out of the hole and the wheel to slide off of the axle during use.

WARNING

Before starting engine, be sure that both wheels are in WHEEL DRIVE position. See Wheel Drive Pins for instructions.

Engaging the Forward Lever when the wheels are not in WHEEL DRIVE could allow the tines to rapidly propel the tiller forward or backward. Failure to comply could cause loss of tiller control, property damage, or personal injury

Forward Lever

The Forward Lever controls the engagement of forward drive to the wheels and counter-rotating tilling with the tines.

To operate the Forward Lever:

1. Put wheels in WHEEL DRIVE position (see “WARNING” statement).
2. Depress and hold the lever against the handlebar to start the wheels going forward and tines rotating in a reverse direction.
3. Release the lever to disengage (stop) the wheels and tines (the engine will continue to run).

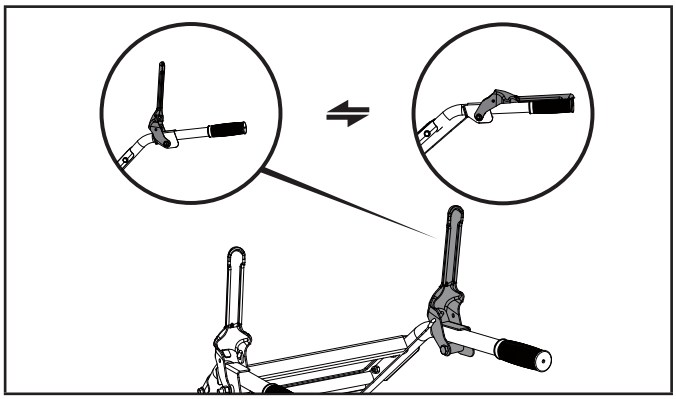

WARNING

Never pull the tiller toward you with the tines engaged.

Reverse Lever

The reverse lever controls the reverse motion of the wheels only. To operate the Reverse Lever:

1. Put wheels in WHEEL DRIVE position (see “WARNING” statement).
2. Ensure all tiller tine motion has stopped before re-engaging tines.
3. Depress and hold the lever against the handlebar to start the wheels in reverse.
4. Release the lever to disengage (stop) the wheels (the engine will continue to run).

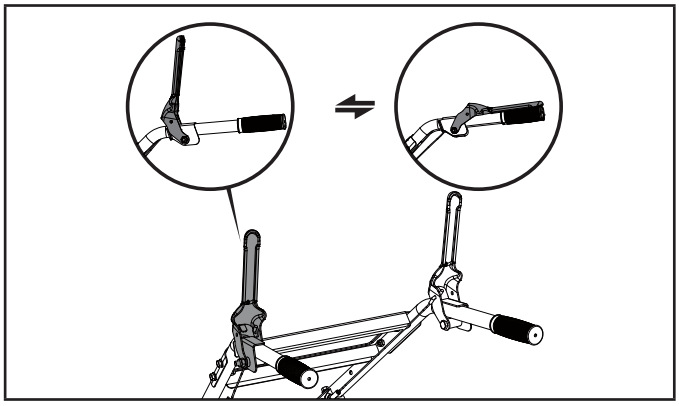

Depth Regulator Lever Adjustment

This regulator lever controls the tilling depth of the tines. Remove pin and clip and slide regulator lever up or down as required. Reassemble pin and clip.

The “travel position” (highest hole) raises the tines approximately 0.25 in. (5.75 mm) off the ground, allowing the tiller to be moved without the tines contacting the ground. This setting should also be used when starting the engine.

Moving the regulator lever upward will increase the tilling depth. The lowest notch allows a tilling depth of approximately 6 in. (15 cm), depending on soil conditions. For best results, always begin tilling at a very shallow depth setting and gradually increase the tilling depth.

⚠ WARNING

Do not attempt to till too deeply too quickly.

Gradually work down to deeper tilling depths.

Place the Depth Regulator Lever in the "travel" position before starting the engine. This position prevents the tines from touching the ground until you are ready to begin tilling.

Failure to follow this warning could result in personal injury or property damage.

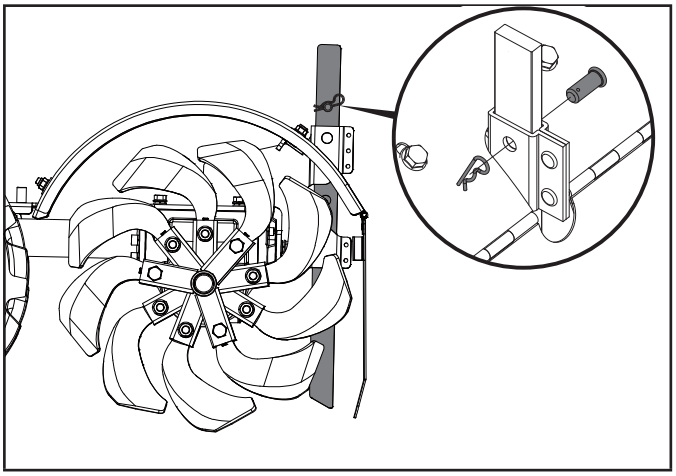

Handlebar Height Adjustment

The handlebar height is adjustable to three different settings. In general, adjust the handlebars so they are at waist level when the tines are 3-4 in. in the soil.

To adjust the handlebars:

1. Stop engine, disconnect spark plug wire from spark plug, and allow engine to cool.
2. Remove hardware, reposition handlebars, and reinstall hardware securely.

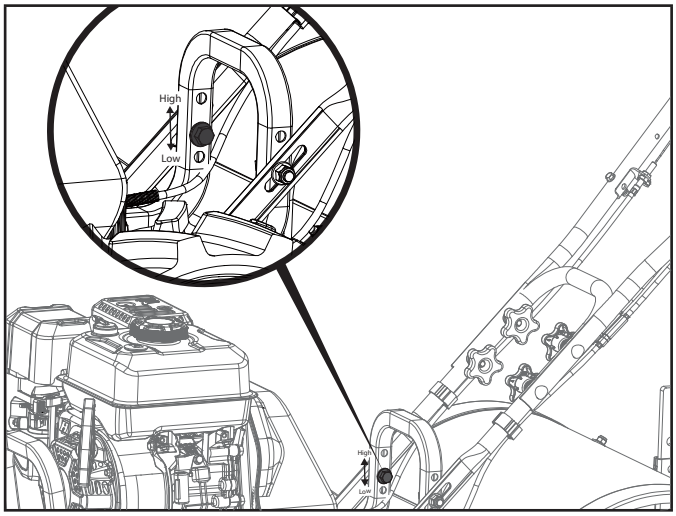

OPERATION

⚠ WARNING

Before operating your machine, carefully read and understand all safety, controls and operating instructions in this Operator's Manual.

Failure to follow these instructions can result in serious personal injury

Introduction

Read this section before you start the engine. Then, take the time to familiarize yourself with the basic operation of the tiller before using it in the garden. Find an open, level area and practice using the tiller controls without the tines engaging the soil. Only after you've become completely familiar with the tiller should you begin using it in the soil.

Add Engine Oil

⚠ WARNING

DO NOT attempt to crank or start the engine before it has been properly filled with the recommended type and amount of oil. Damage to the engine as a result of failing to follow these instructions will void your warranty.

NOTICE

The recommended oil type is **10W-30 automotive oil**.

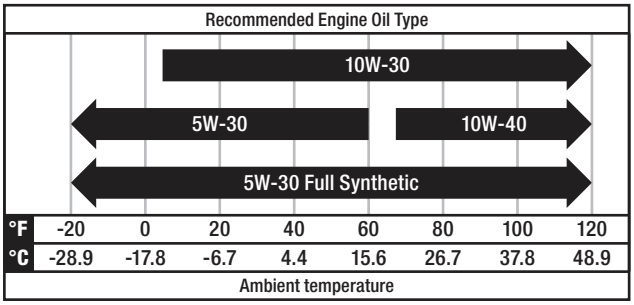

1. Place tiller on a flat, level surface.
2. Remove oil fill cap/dipstick to add engine oil.
3. Using a funnel, add up to 0.5 US qt. (500 mL) of oil and replace oil fill cap/dipstick. DO NOT OVERFILL.
4. Check engine oil level and add as needed.

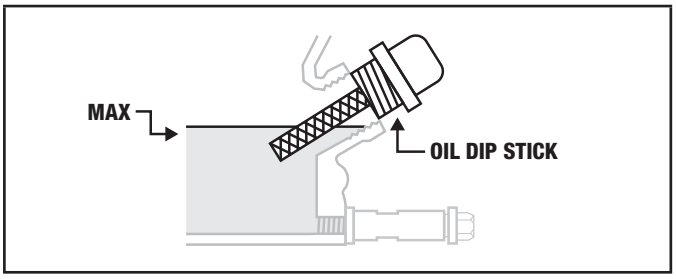

NOTICE

Once oil has been added, a visual check should show oil about 1-2 threads from running out of the fill hole.

When using the dipstick to check oil level, DO NOT screw in the dipstick while checking.

NOTICE

Check oil level often during the break-in period. Refer to the *Maintenance* section for recommended service intervals.

NOTICE

The first 5 hours of run time are the break-in period for the engine. After the 5 hour break-in period, change the oil.

NOTICE

Synthetic oil may be used after the 5 hour initial break-in period. Using synthetic oil does not decrease the recommended oil change interval. Full synthetic 10W-30 oil will aid in starting in cold ambient < 41° F (5° C) temperatures.

Transmission Gear Oil

The tiller ships from the factory with transmission gear oil installed. Operating the tiller when the transmission is low on oil can result in severe damage. See *Checking or Adding Transmission Gear Oil Service*, in the *Maintenance* section, for more details.

Add Fuel

DANGER

Gasoline vapors are highly flammable and extremely explosive.

DO NOT light or smoke cigarettes. Fire or explosion can cause severe burns or death.

Only fill or drain fuel outdoors in a well-ventilated area. DO NOT pump gasoline directly into the engine. Use an approved container to transfer the fuel to the engine.

Never use a gasoline container, gasoline tank, or any other fuel item that is broken, cut, torn or damaged.

DO NOT overfill the gasoline tank. Always keep fuel away from sparks, open flames, pilot lights, heat and other sources of ignition.

Use clean, fresh, regular unleaded gasoline with a minimum octane rating of 87 and an ethanol content of 10% or less by volume. E10 E15 E85

DO NOT mix oil with gasoline.

1. Remove the gasoline cap.
2. Slowly add gasoline to the tank. DO NOT OVERFILL.

Gasoline can expand after filling. A minimum of ¼ in. (6.4 mm) of space left in the tank is required for gasoline expansion although more than ¼ in. (6.4 mm) is recommended. Gasoline can be forced out of the tank as a result of expansion if overfilled and can affect the stable running condition of the tiller.

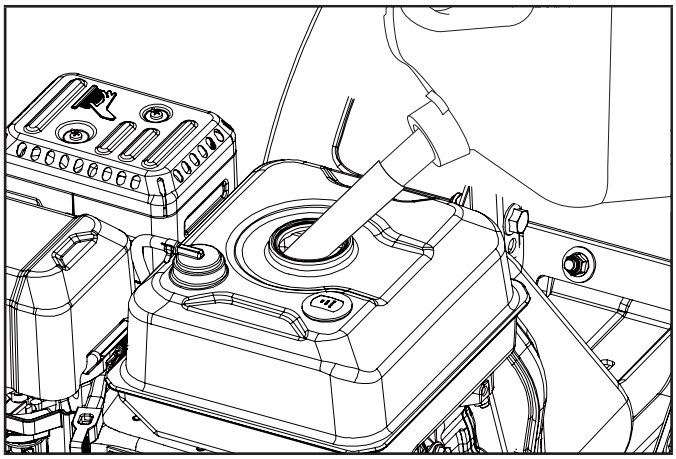

⚠ CAUTION

Use unleaded gasoline with a minimum octane rating of 87 and an ethanol content of 10% or less by volume.

DO NOT light cigarettes or smoke when filling the tank.

DO NOT mix oil and gasoline.

DO NOT overfill the tank. Fill tank to approximately ¼ in. (6.4 mm) below the top of the tank to allow for gasoline expansion.

DO NOT pump gasoline directly into the engine at the pump. Use an approved fuel container to transfer the gasoline to the engine.

DO NOT fill tank indoors.

DO NOT fill tank when the engine is running or hot.

⚠ WARNING

Pouring gasoline too fast through the fuel screen may result in blow back of gasoline at the operator while filling.

NOTICE

The engine works well with 10% or less ethanol blended gasoline. When using ethanol-gasoline blends there are some issues worth noting:

- Ethanol-gasoline blends can absorb more water than gasoline alone.
- These ethanol blends can eventually separate, leaving water or a watery goo in the tank, fuel valve and carburetor. The compromised gasoline can be drawn into the carburetor and cause damage to the engine and/or create potential hazards.
- If a fuel stabilizer is used, confirm that it is formulated to work with ethanol-gasoline blends.
- Any damages or hazards caused by using ethanol blended gasoline higher than 10% by volume, improperly stored gasoline, and/or improperly formulated stabilizers, are not covered by manufacturer's warranty.

It is advisable to always shut off the gasoline supply and run the engine to starvation after each use. See *Storage* instructions for extended non-use.

Starting the Engine

To help prevent serious personal injury or damage to equipment:

⚠ WARNING

Do not attempt to engage the tines or wheels until you have read all of the operating instructions

⚠ WARNING

Before starting engine, put both wheels in the WHEEL DRIVE position. Never have wheels in FREEWHEEL position when engine is running. When the wheels are in FREEWHEEL, they do not hold back the tiller and the tines could propel the tiller rapidly forward or backward.

⚠ WARNING

Keep away from rotating tines. Rotating tines will cause injury.

1. Make certain the tiller is on a flat, level surface. Tilling on a grade greater than 15 degrees can be unsafe.
2. Put the wheels in the WHEEL DRIVE position (wheel pins must be through holes in wheel hubs and wheel shaft).
3. Move the Depth Regulator Lever all the way down to the "travel" position, so that the tines clear the ground.
4. Release all controls on the tiller.
5. Move the choke lever to the "CHOKE" position.
6. Move the fuel valve to the "ON" position.

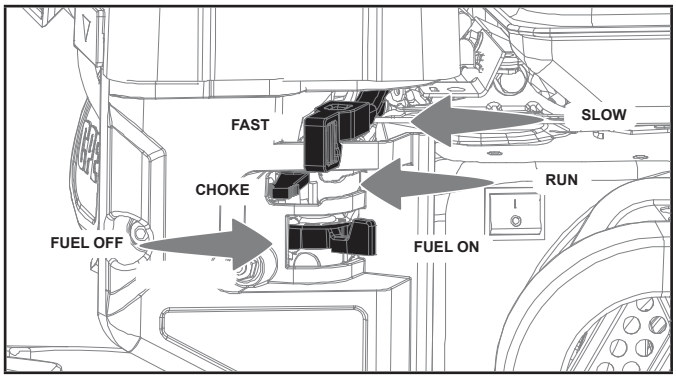

7. Pull the starter cord slowly until resistance is felt and then pull rapidly.

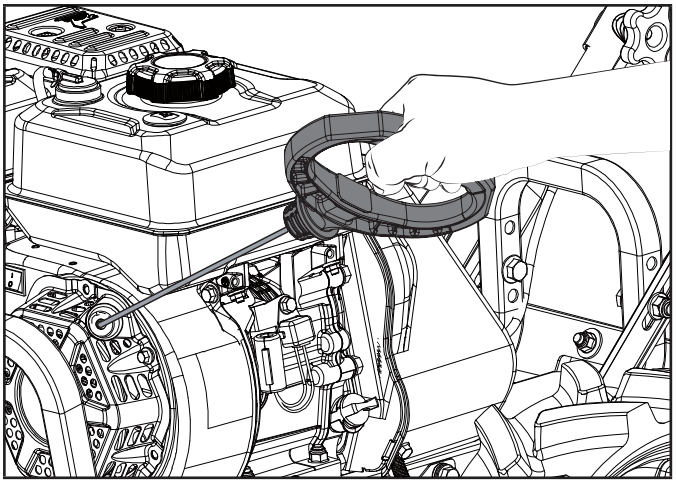

8. As engine warms up, move the choke lever to the “RUN” position.

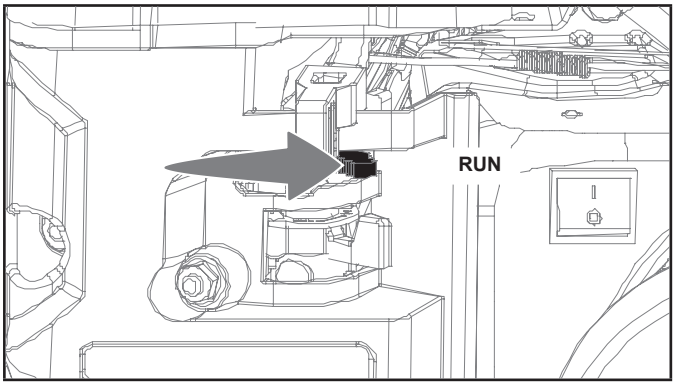

Stopping the Engine and the Tiller

In an emergency, push the engine switch to the “OFF” position.

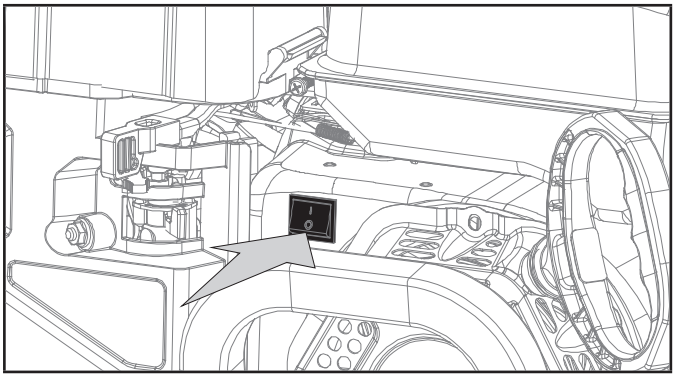

Under normal operation:

1. To stop the wheels and tines, release all control levers.
2. Turn the fuel valve to the “OFF” position.

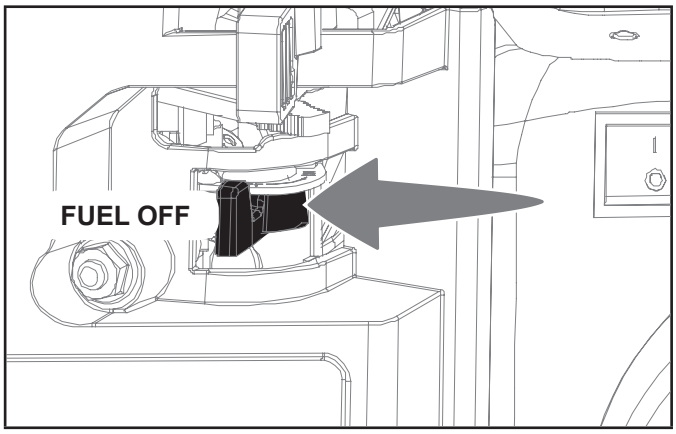

3. Let the engine run until fuel starvation has stopped the engine. This usually takes a few minutes.

Operation at High Altitude

The density of air at high altitude is lower than at sea level. Engine power is reduced as the air mass and air-fuel ratio decrease. Engine power and tiller output will be reduced approximately 3½% for every 1000 ft. of elevation above sea level. This is a natural trend and cannot be changed by adjusting the engine. At high altitudes increased exhaust emissions can also result due to the increased enrichment of the air fuel ratio. Other high altitude issues can include hard starting, increased fuel consumption and spark plug fouling.

To alleviate high altitude issues other than the natural power loss, CPE can provide a high altitude carburetor main jet. The alternative main jet and installation instructions can be obtained by contacting our Technical Support Team. Installation instructions are also available in the Technical Bulletin area of the CPE website.

The part number and recommended minimum altitude for the application of the high altitude carburetor main jet is listed in the table below.

In order to select the correct high altitude main jet it is necessary to identify the carburetor model. For this purpose, a code is stamped on the side of the carburetor. Select the correct high altitude jet part number corresponding to the carburetor code found on your particular carburetor.

Carb. Code	High Alt. Jet Part Number	Min. Altitude
100763777 -0001	100073724	3281-9843 ft. (1,000-3,000 m)

⚠ WARNING

Operation using the alternative main jet at elevations lower than the recommended minimum altitude can damage the engine. For operation at lower elevations, the originally supplied standard main jet must be used. Operating the engine with the wrong engine configuration at a given altitude may increase its emissions and decrease fuel efficiency and performance.

TILLING TIPS AND TECHNIQUES

Tilling Depths

⚠ WARNING

Before tilling, contact your telephone or utilities company and inquire if underground equipment or lines are used on your property. Do not till near buried electric cables, telephone lines, pipes or hoses.

Avoid pushing down on the handlebars in an attempt to force the tiller to dig deeper. Doing so takes the weight off the powered wheels, causing them to lose traction (sometimes, slight downward pressure on the handlebars will help get through a particularly tough section of sod or unbroken ground, but in most cases this wont be necessary.)

Avoid trying to dig too deeply too quickly, especially when busting sod or when tilling soil that hasn't been tilled for some time. Use shallow depth regulator settings (only an inch or two deep) for the first passes through the soil. With each succeeding pass, dig another inch or two deeper. (Watering the area a few days prior to tilling will make the tilling easier, as will letting the newly worked soil set for a day or two before making a final, deep tilling pass.

Let the Tiller Do the Work

While tilling, relax and let the wheels pull the tiller along while the tines do the digging. Walk on the side that is not yet finished (to avoid making footprints in the freshly tilled soil) and lightly, but securely grip the handlebar with just one hand.

Avoid Tilling Soggy, Wet Soil

Tilling wet soil often results in large, hard clumps of soil that can interfere with planting. If time permits, wait a day or two after heavy rains to allow the soil to dry before tilling. Test soil by squeezing it into a ball. If it compresses too easily, it is too wet to till.

Preparing Seedbeds

When preparing a seedbed, go over the same path twice in the first row, then overlap one-half the tiller width on the rest of the passes. When finished in one direction, make a second pass at a right angle. Overlap each pass for best results (in very hard ground, it may take three or four passes to thoroughly pulverize the soil.)

If the garden size will not permit lengthwise and then crosswise tilling, then overlap the first passes by one-half a tiller width, followed by successive passes at one quarter width.

Cultivating

With planning, you can allow enough room between rows to cultivate. Leave room for the hood width, plus enough extra room for future plant growth.

Tilling on Slopes

Read the following recommendations before tilling on slopes:

If you must garden on a moderate slope, please follow two very important guidelines:

1. Till only on moderate slopes, never on steep ground where footing is difficult. Tilling on a grade greater than 15 degrees can be unsafe.
2. We recommend tilling up and down slopes rather than terracing. Tilling vertically on a slope allows maximum planting area and also leaves room for cultivating.

IMPORTANT: When tilling on slopes, be sure the correct oil level is maintained in the engine (check every one-half hour of operation). The incline of the slope will cause the oil to slant away from its normal level and this can starve engine parts of required lubrication. Keep the engine oil level at the full point at all times!

⚠ WARNING

Tilling on slopes greater than 15 degrees can be unsafe. Do not operate tiller on a slope too steep for safe operation. Till slowly and be sure you have good footing. Never permit tiller to freewheel down slopes. Failure to follow this warning could result in personal injury.

Clearing the Tines

The tines have a self-clearing action which eliminates most tangling of debris in the tines. However, occasionally dry grass, stringy stalks or tough vines may become tangled. Follow these procedures to help avoid tangling and to clean the tines, if necessary.

- To reduce tangling, set the depth regulator deep enough to get maximum “chopping” action as the tines chop the material against the ground. Also, try to till under crop residues or cover crops while they are green, moist and tender.
- While power composting, try swaying the handlebars from side to side about 6 in. to 12 in. (15 to 30 cm). This “fishtailing” action often clears the tines of debris.
- If tangling occurs, lift the tines out of the soil and run the tiller in reverse (if unit is equipped with powered reverse) for a few feet. This reversing action should unwind a good deal of debris.
- It may be necessary to remove the debris by hand (a pocket knife will help you to cut away the material). Be sure to stop the engine and disconnect the spark plug wire before clearing the tines by hand.

⚠ WARNING

Before clearing the tines by hand, stop the engine, allow all moving parts to stop and disconnect the spark plug wire.

Failure to follow this warning could result in personal injury.

Loading and Unloading the Tiller

⚠ WARNING

Loading and unloading the tiller into a vehicle is potentially hazardous and we don’t recommend doing so unless absolutely necessary, as this could result in personal injury or property damage. However, if you must load or unload the tiller, follow the guidelines given next.

- Before loading or unloading, stop the engine, wait for all parts to stop moving, disconnect the spark plug wire and let the engine and muffler cool.
- The tiller is too heavy and bulky to lift safely by one person. Two or more people should share the load.
- Use sturdy ramps and manually (engine shut off) roll the tiller into and out of the vehicle. Two or more people are needed to do this.
- The ramps must be strong enough to support the combined weight of the tiller and any handlers. The ramps should provide good traction to prevent slipping; they should have side rails to guide the tiller along the ramps; and they should have a locking device to secure them to the vehicle.
- The handlers should wear sturdy footwear that will help to prevent slipping.
- Position the loading vehicle so that the ramp angle is as flat as possible (the less incline to the ramp, the better). Turn the vehicle’s engine off and apply its parking brake.
- When going up ramps, stand in the normal operating position and push the tiller ahead of you. Have a person at each side to turn the wheels.
- When going down ramps, walk backward with the tiller following you. Keep alert for any obstacles behind you. Position a person at each wheel to control the speed of the tiller. Never go down ramps tiller-first, as the tiller could tip forward.
- Place wooden blocks on the downhill side of the wheels if you need to stop the tiller from rolling down the ramp. Also, use the blocks to temporarily keep the tiller in place on the ramps (if necessary), and to chock the wheels in place after the tiller is in the vehicle.
- After loading the tiller, prevent it from rolling by engaging the wheels in the WHEEL DRIVE position. Chock the wheels with blocks and securely tie the tiller down.

MAINTENANCE

⚠ WARNING

Before inspecting, cleaning or servicing the machine, shut off engine, wait for all moving parts to come to a complete stop, disconnect spark plug wire and move wire away from spark plug. Remove ignition key on electric start models.

Failure to follow these instructions can result in serious personal injury or property damage.

NOTICE

For Emission control devices and systems, read and understand your responsibilities for service as stated in the Emission Control Warranty Statement of this manual.

BEFORE EACH USE

- ☐ Check engine oil level
- ☐ Clean engine
- ☐ Check air filter element

FIRST 2 HOURS OF BREAK-IN OPERATION

- ☐ Check drive belt tension
- ☐ Check nuts and bolts
- ☐ Change engine oil

EVERY 5 OPERATING HOURS

- ☐ Check engine oil level

EVERY 10 OPERATING HOURS

- ☐ Check drive belt tension
- ☐ Check nuts and bolts
- ☐ Change engine oil
- ☐ Lubricate tiller

EVERY FIRST MONTH OR FIRST 20 HOURS

- ☐ Change engine oil
- ☐ Clean air filter element

EVERY 30 OPERATING HOURS

- ☐ Check gear oil level in transmission
- ☐ Check tines for wear
- ☐ Check air pressure in tires (if unit has pneumatic tires)

EVERY 3 MONTHS OR EVERY 50 HOURS OF OPERATION

- ☐ Change engine oil
- ☐ Replace air filter element
- ☐ Change transmission gear oil

EVERY YEAR OR EVERY 100 HOURS OF OPERATION

- ☐ Clean deposit cup
- ☐ Check/adjust idling
- ☐ Check/adjust valve clearance**
- ☐ Clean fuel tank and fuel filter**

EVERY TWO YEARS

- ☐ Check fuel line

EVERY 125 HOURS

- ☐ Clean up carbon from cylinder head piston**

NOTICE

- Change the engine oil after the first 2 hours of break-in operation.
- Change the engine oil more frequently in dusty conditions.

** These items should be replaced if replacement needed.*

*** These items should be maintained and repaired by our authorized dealer, unless the operator has appropriate tools and is proficient with mechanical maintenance.*

Cleaning the Tiller

⚠ CAUTION

DO NOT spray engine directly with water.

Water can contaminate the fuel system and can enter the engine through the cooling slots and damage the engine.

Clear the debris from the tiller, especially around the Gear Oil Dipstick area.

Use a damp cloth to clean exterior surfaces of the engine and tiller.

Use a soft bristle brush to remove excess dirt and oil.
Use an air compressor (25 PSI) to clear dirt and small debris.

Wipe all metal parts with an oily rag to help prevent rust and corrosion.

Tiller Lubrication

After every 10 operating hours, oil or grease the lubrication points as described below.

Use clean lubricating oil (#30 weight engine oil is suitable) and clean general purpose grease (grease containing a metal lubricant is preferred, if available).

- Remove the wheels, clean the wheel shaft and apply a thin coating of grease to the wheel shaft.
- Remove the tines and clean the tine shaft. Use a file or sandpaper to gently remove any rust, burrs or rough spots (especially around holes in shaft). Apply grease to ends of shaft before installing tines.
- Oil the threads on the handlebar height adjustment screws and the handlebar attaching screws.

Check for Oil Leaks

- Before each use, check the tiller for signs of an oil leak — usually a dirty, oily accumulation either on the unit or on the floor.
- A little seepage around a cover or an oil seal is usually not a cause for alarm. However, if the oil drips overnight, then immediate attention is needed. Ignoring an oil leak can result in severe transmission damage!
- If a cover is leaking, check for loose screws. If the screws are tight, a new gasket or oil seal may be required.
- If the leak is from around a shaft and oil seal, the oil seal probably needs to be replaced. See your authorized dealer or contact the factory for service or advice.
- IMPORTANT: Never operate the tiller if the transmission is low on oil. Check the oil level after every 30 hours of operation and whenever there is any oil leakage.

Check Hardware

Check for loose or missing hardware after every 10 operating hours and tighten or replace (as needed) before reusing tiller.

Be sure to check the screws underneath the tiller hood that secure the transmission cover and the Depth Regulator Lever to the transmission.

Transmission Gear Oil Service

Check the transmission gear oil level after every 30 hours of operation or whenever you notice any oil leak. Operating the tiller when the transmission is low on oil can result in severe damage.

A. To Check the Transmission Gear Oil Level:

NOTICE

Ensure area around Gear Oil Dipstick is completely clean before removing the Gear Oil Dipstick.

1. Check the gear oil level when the transmission is cool. Gear oil will expand in warm operating temperatures and this expansion will provide an incorrect oil level reading.
2. With the tiller on level ground, pull the Gear Oil Dipstick all the way up.
3. Remove the Gear Oil Dipstick from the transmission housing.

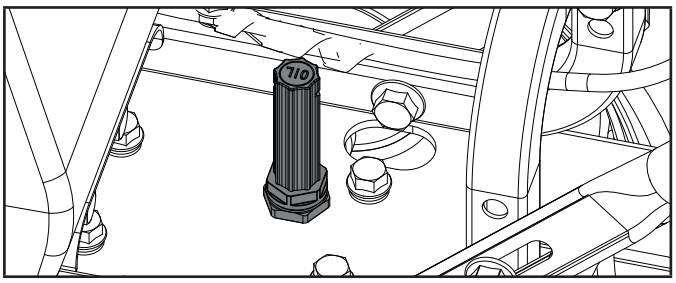

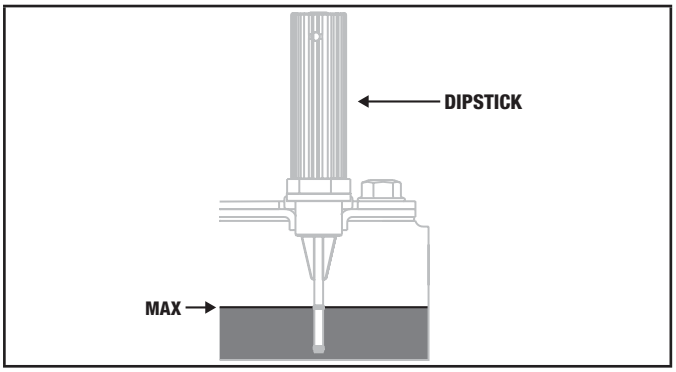

4. The gear oil level is correct if it falls between the two nodes on the oil dipstick.
5. If the gear oil level is low, add GL-4 gear oil (SAE 85W-140 or SAE 140).
6. If the gear oil level is okay, securely replace the oil fill plug.

IMPORTANT: Do not operate the tiller if the gear oil level is low. Doing so will result in severe damage to the transmission components..

B. To Drain the Transmission Gear Oil:

NOTICE

Ensure area around transmission dipstick and fill bolt is completely clean before removing.

The transmission gear oil does not need to be changed unless it has been contaminated with dirt, sand or metal particles.

1. With the engine shut off and the spark plug wire disconnected, remove tine shield lock nuts and washers with a 13mm wrench or socket.

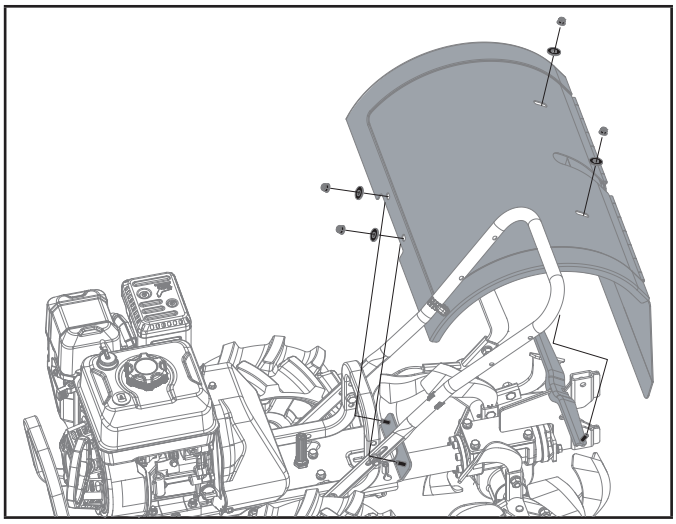

2. Completely clean around and remove Gear Oil Dipstick and M16 tine fill bolt with a 17mm wrench or socket and put in a safe place.

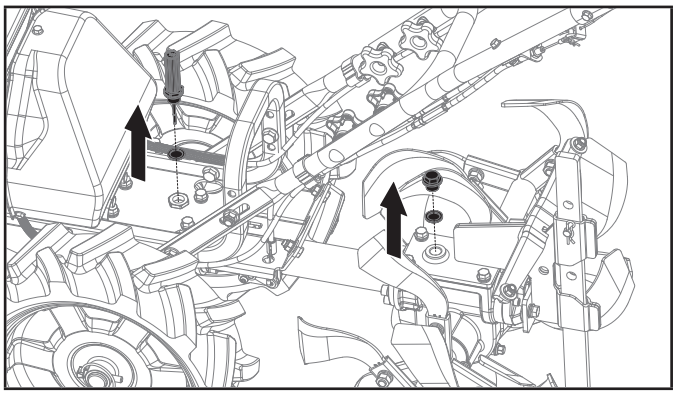

3. Place an automotive oil drain pan under the drive portion of the gearbox.
4. Remove the M10 drain bolt with a 10mm socket or wrench from the bottom of the transmission and allow the gear oil to drain completely. Takes approximately 10 minutes with warm oil.

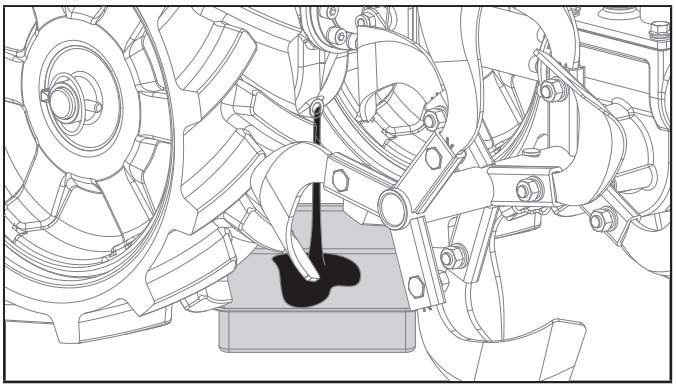

5. Reinstall the drain bolt and torque to 7 lbf-ft (9.6 Nm).
6. Move drain pain to tine portion of the gearbox. You may need to remove the tines in order slide drain pan into position.
7. Remove the M10 drain bolt with 10mm socket from the bottom of the transmission and allow the gear oil to drain completely.

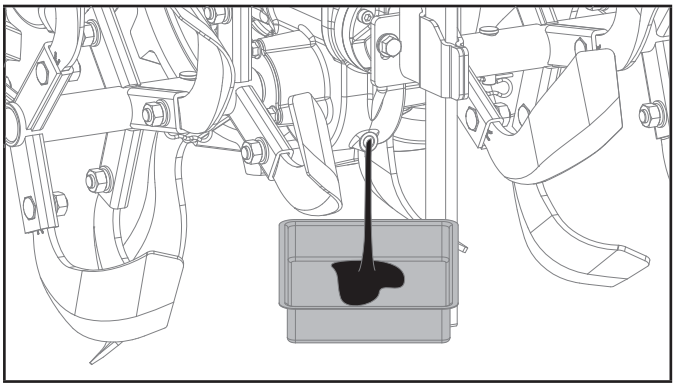

8. Reinstall the drain bolt and torque to 7 lbf-ft (9.6 Nm).
9. Refill the transmission using GL-4 gear oil (SAE 85W-140 or SAE 140) with approximately 30 US fl. oz. (0.86 L) total, split evenly between each fill location.

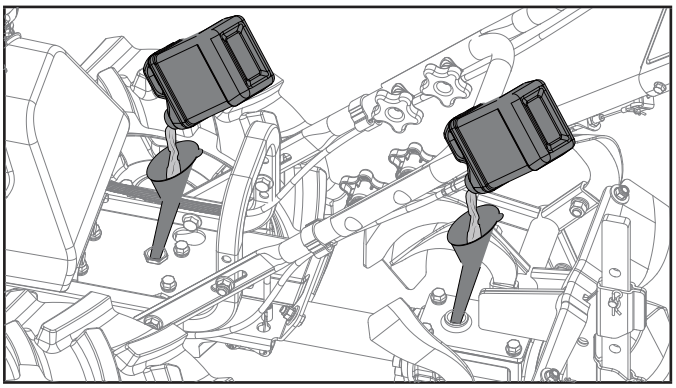

10. Reinstall the Gear Oil Dipstick and M16 tine fill bolt with a 17mm wrench or socket. Do not overtighten.
11. Reinstall the tine shield lock nuts and washers with 13mm wrench or socket.
12. Refill the engine with engine oil and gasoline.

Tines

The tines will wear with use and should be inspected at the beginning of each tilling season and after every 30 operating hours. The tines can be replaced either individually or as a complete set. Refer to the parts list for tine identification and part numbers.

A. Tine Inspection:

With use, the tines will become shorter, narrower and pointed. Badly worn tines will result in a loss of tilling depth, and reduced effectiveness when chopping up and turning under organic matter.

B. Removing/Installing a Single Tine:

1. With the engine shut off and the spark plug wire disconnected, remove the M10×25 bolt, lock washer, flat washer and M10 nut that attach a single tine to a tine holder. If needed, use penetrating oil on the nuts.
2. When installing a single tine, be sure to position it so that its cutting edge (sharp) will enter the soil first as the tiller moves forward. Hand tighten completely.

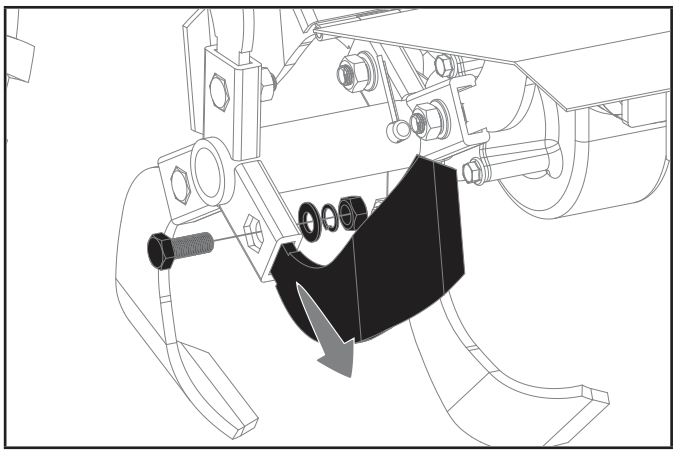

C. Removing/Installing a Tine Assembly:

1. A tine assembly consists of eight tines mounted on a tine holder.
2. If removing both tine assemblies, mark them “left” and “right” before removal. Remove (2) pins and (2) B pins that secure the tine assembly to the tine shaft. If necessary, use a rubber mallet to tap the tine assembly outward off the shaft.
3. Before reinstalling the tine assembly, inspect the tine shaft for rust, rough spots or burrs. Lightly file or sand, as needed. Apply a thin coat of grease to the shaft.

4. Install each tine assembly so that the cutting (sharp) edge of the tines will enter the soil first when the tiller moves forward.
5. Bend B pins once inserted to prevent the B pins from coming out.

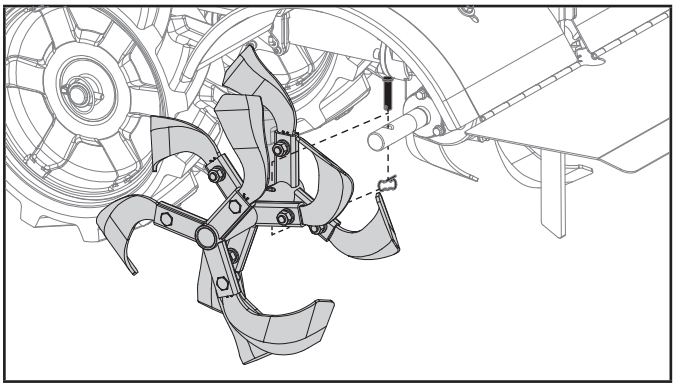

Forward and Reverse Cable Tension Adjustment

Proper cable tension is critical to optimum performance. After 30 minutes of operation, all cables may have to be adjusted. After the first use, check the tension after every 2 hours of use.

To Increase Cable Tension

1. Using a 12mm wrench, loosen the upper jam nut (1) in a counterclockwise direction.
2. Turn the adjusting nut (2) counterclockwise in 1/8 inch increments.
3. Tighten the upper jam nut (1) after each 1/8 inch adjustment.
4. Check the adjustment.
5. This procedure can be repeated until the cable adjustment nuts are fully adjusted. If no further adjustment can be made, the cable will need to be replaced.
6. To decrease cable tension, repeat these steps in reverse order.

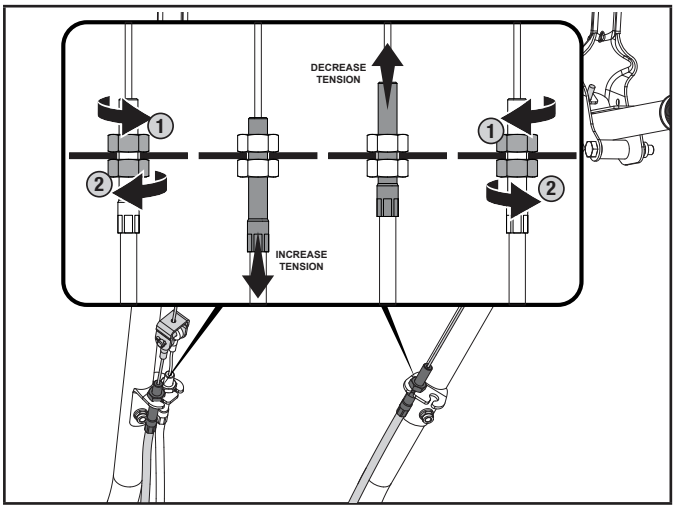

Replacement Belt Information

If the drive belt needs to be replaced, refer to the parts list for information. The procedure requires average mechanical ability and commonly available tools to change or replace.

NAME	PART NUMBER	LENGTH (inches)	WIDTH (inches)
Forward V-Belt	100763895	26.4 in.	0.5 in.
Reverse V-Belt	100811662	32.7 in.	0.4 in.

NAME	PART NUMBER	LENGTH (mm)	WIDTH (mm)
Forward V-Belt	100763895	670 mm	12 mm
Reverse V-Belt	100811662	830 mm	10 mm

Change Forward/Reverse Belts

1. Make sure the engine is off; fuel valve is turned off and spark plug boot is removed from the plug.

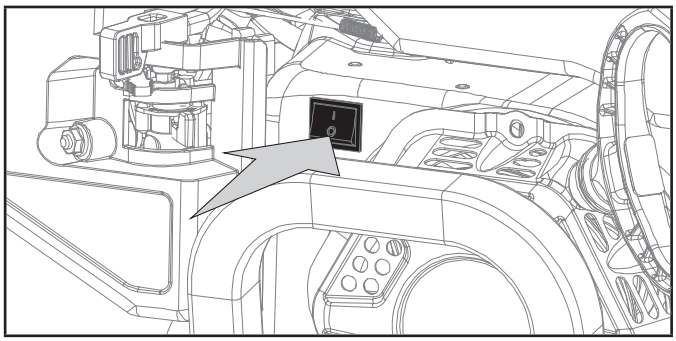

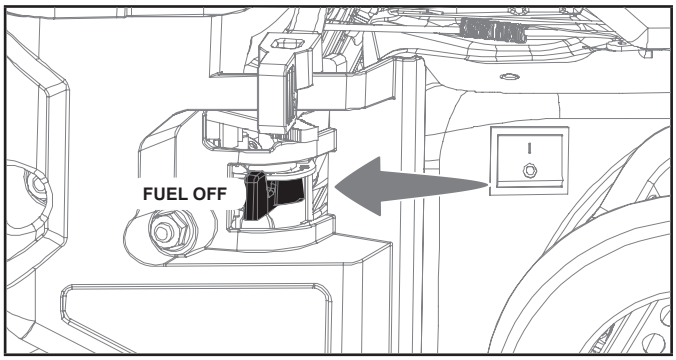

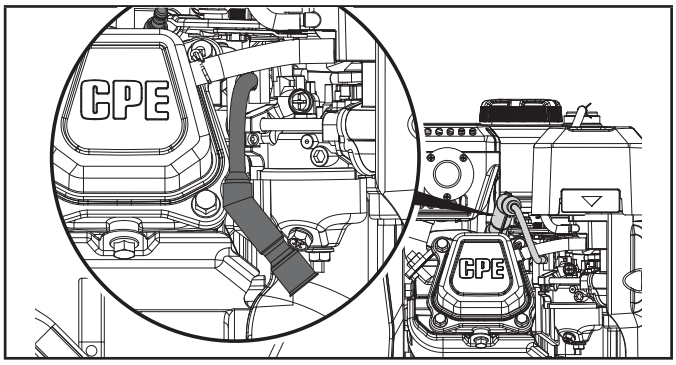

2. Find a concrete block or another sturdy object approximately 11 inches tall and 8 inches wide and prop the front bumper up on this object, getting the wheels off the ground.

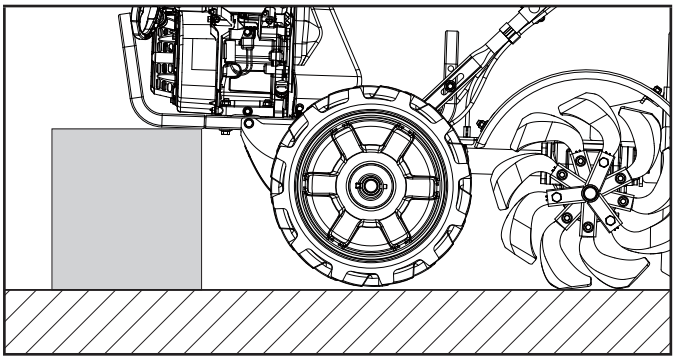

3. Remove the wheels by removing the locking pin and sliding the wheels from the axle.

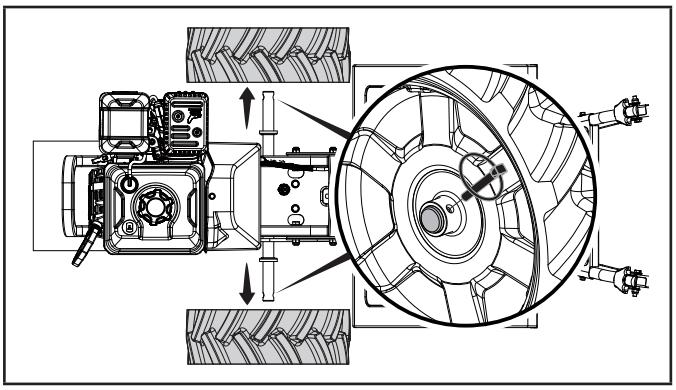

4. Using a 10mm wrench, remove the three top belt cover bolts. Remove the top cover and set it aside.

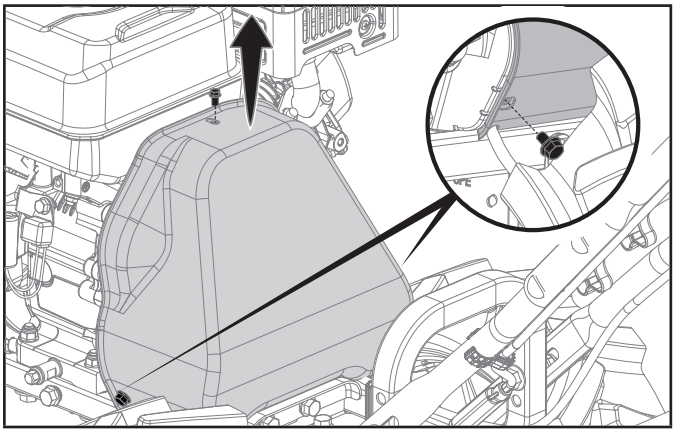

5. Using a 12mm wrench, remove the four bottom belt cover bolts. Remove the bottom cover and set it aside.

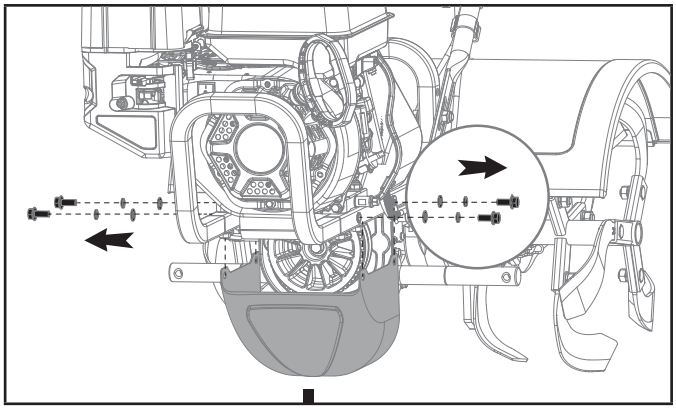

6. Using a 10mm wrench to hold the stud (1) in place, use a 13mm wrench to remove the nut (2), then remove the bottom belt guide.

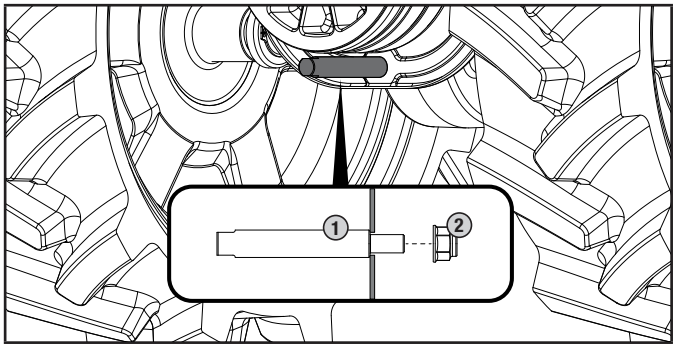

7. Remove the reverse belt at top side. This may require some light prying with a flat head screwdriver to get the belt over the pulley.

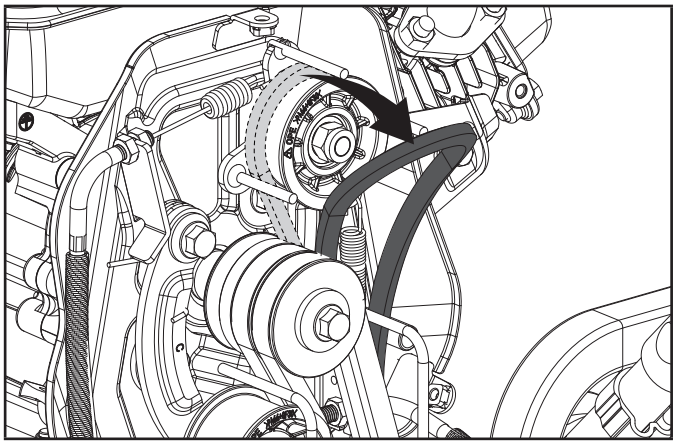

8. Remove the reverse belt at bottom side.

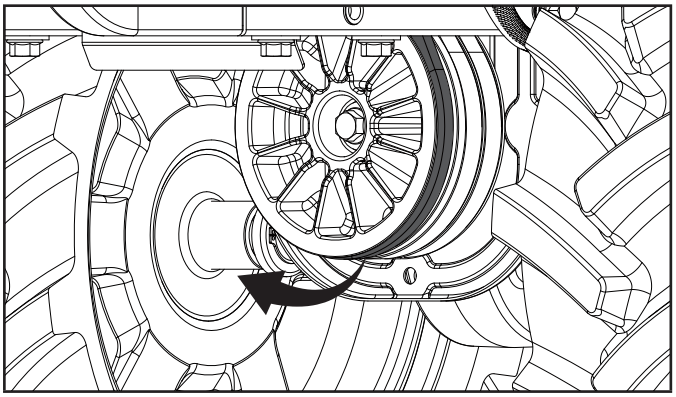

9. Remove forward belt 1 at top side. This may require some light prying with a flat head screwdriver to get the belt over the pulley.

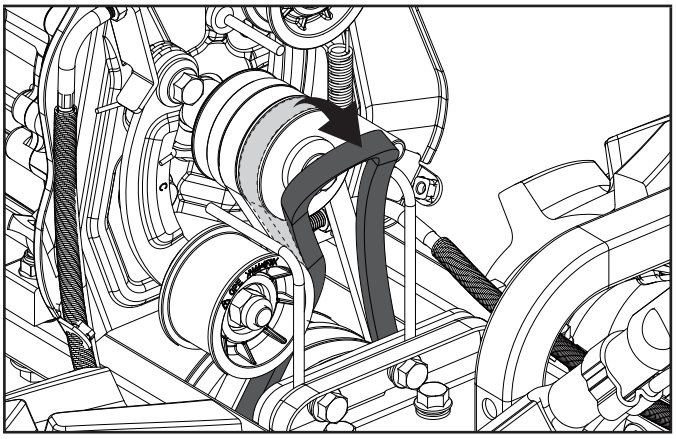

10. Remove forward belt 2 at top side. This may require some light prying with a flat head screwdriver to get the belt over the pulley.

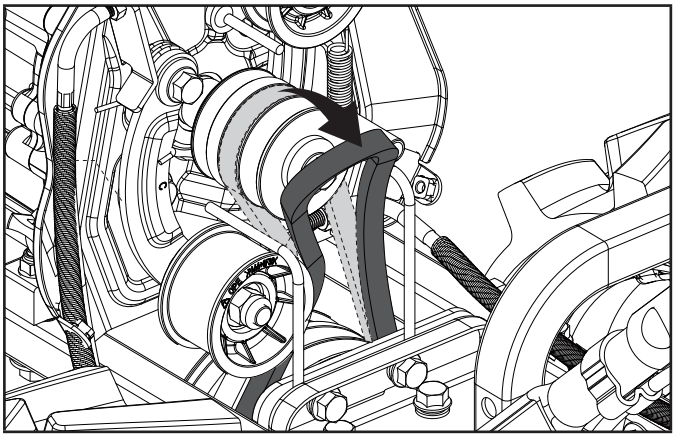

11. Remove forward belt at bottom side.

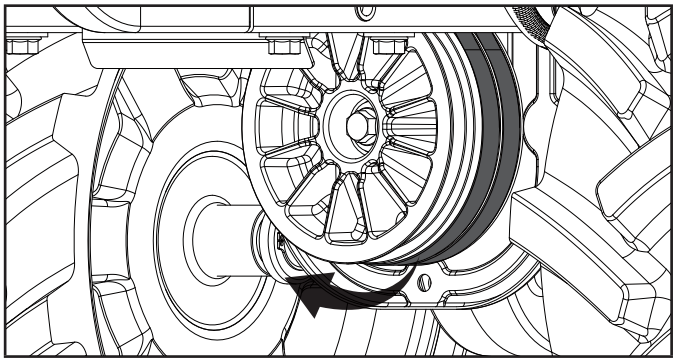

12. Repeat the steps in reverse order to reinstall the belts.

⚠ WARNING

The tines or wheels should not rotate with the engine running, the depth regulator set at transport height (lowest height) and the drive lever not engaged.

Engine Cleaning

Keeping the engine clean will help to ensure smooth operation and prevent damage from overheating. Be sure that the muffler is cool before servicing the engine.

Air Cleaner Service

The air cleaner filters dirt and dust out of the air before it enters the carburetor. Operating the engine with a dirty, clogged air filter can cause poor performance and damage to the engine. Never operate the engine without the air cleaner installed. Inspect and service the air cleaner more often if operating in very dusty or dirty conditions.

Engine Oil Service

Check the engine oil level before each use and after every five hours of continuous operation. Running the engine when it is low on oil will quickly ruin the engine.

It is recommended that you change the engine oil after every 10 hours of operation and even sooner when operating in extremely dirty or dusty conditions.

A. To Check the Engine Oil Level:

1. Park the tiller on a level area and shut off the engine.
2. Level the engine (use the Depth Regulator Lever to adjust the engine angle).
3. Clean around the oil dipstick to prevent dirt from falling into the crankcase.

4. On engines with a dipstick, remove it and wipe it clean. Reinsert the dipstick, tighten it securely, and remove it. Add oil as needed to bring the level up to the FULL mark. Wipe dipstick clean each time oil level is checked. Do not overfill. Tighten dipstick securely.

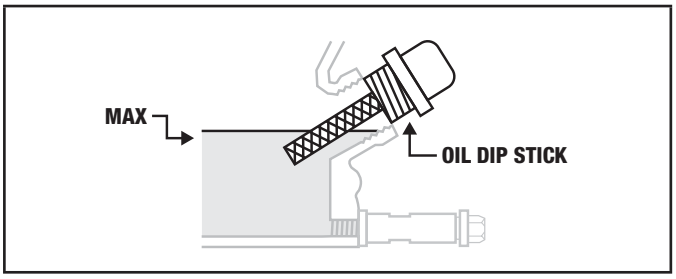

B. To Change the Engine Oil:

⚠ CAUTION

DO NOT attempt to crank or start the engine before it has been properly filled with the recommended type and amount of oil. Damage to the tiller as a result of failure to follow these instructions will void your warranty.

NOTICE

The recommended oil type is **10W-30 automotive oil**.

1. Place tiller on a flat, level surface.
2. Put the wheels in the WHEEL DRIVE position.
3. Remove the left-side wheel and carefully prop up until ready to drain the engine oil.
4. Tilt the left-side wheel shaft into a drain pan.
5. Clean around the oil drain plug to prevent dirt from falling into the crankcase. Remove oil drain plug.
6. Allow the engine oil to drain.

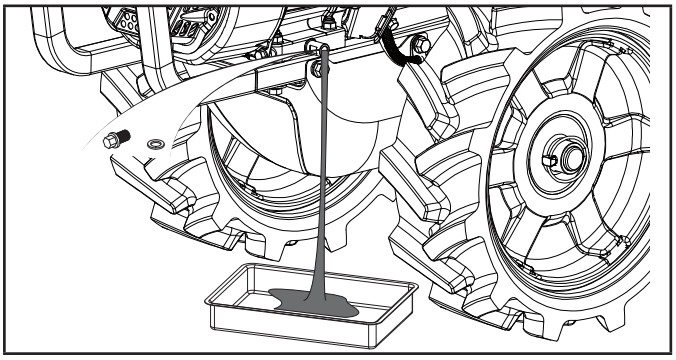

7. Replace oil drain bolt.
8. Reinstall the wheel.
9. Refill the with engine oil through the dipstick with funnel and replenish the fuel tank with gasoline.

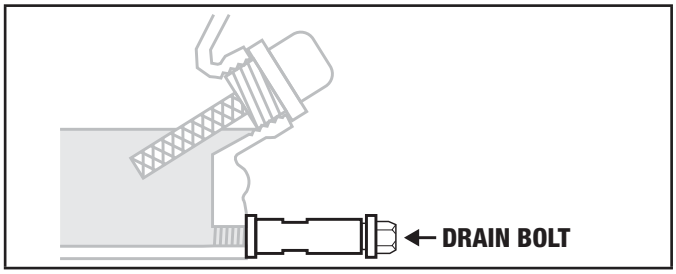

NOTICE

Once oil has been added, a visual check should show oil about 1-2 threads from running out of the fill hole.

If using the dipstick to check oil level, DO NOT screw in the dipstick while checking.

NOTICE

Check oil often during the break-in period. Refer to the *Maintenance* section for recommended service intervals.

NOTICE

We consider the first 5 hours of run time to be the break-in period for the engine. During the break in period we recommend using standard automotive non-synthetic blended oils. After the break in period synthetic oil can be used but is not required. Adjusting throttle setting will increase/decrease engine speed helping to seat piston rings. Avoid bogging or lugging the engine down and avoid prolonged running at constant RPM.

NOTICE

Weather will affect engine oil and engine performance. Change the type of engine oil used based on weather conditions to suit the engine needs.

NOTICE

Synthetic oil may be used after the 5 hour initial break-in period. Using synthetic oil does not decrease the recommended oil change interval. Full synthetic 10W-30 oil will aid in starting in cold ambient <5º C (41º F).

Cleaning and Adjusting the Spark Plug(s)

1. Remove the spark plug cable from the spark plug.
2. Use a spark plug socket tool (not included), or a 13/16 in. (21 mm) socket (not included) to remove the plug.
3. Inspect the electrode on the plug. It must be clean and not worn to produce the spark required for ignition.

4. Make certain the spark plug gap is 0.023-0.031 in. (0.6-0.8 mm).

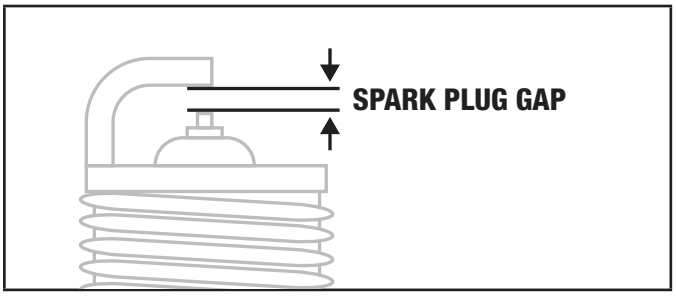

5. Refer to the spark plug types in *Specifications* when replacing the plug.
6. Firmly re-install the plug.
7. Attach the spark plug cable to the spark plug.

Cleaning the Air Filter

1. Using your finger, pry the outer tab up slightly and lift the air filter cover above the tab lock position.

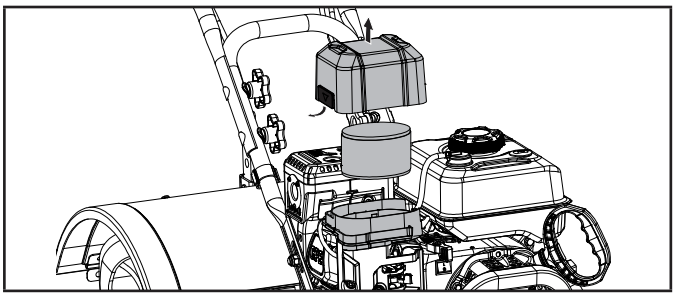

2. Remove both air filter cover and air filter element.
3. Wash in liquid detergent and water. Squeeze thoroughly dry in a clean cloth.
4. Saturate in clean engine oil.
5. Squeeze in a clean, absorbent cloth to remove all excess oil.
6. Place the filter in the assembly.
7. Reattach the air filter cover. Attach the side closest to the gas tank then pivot down to close. Make sure air filter cover snaps in place.

STORAGE

Refer to the *Maintenance* section for proper cleaning instructions.

Tiller Storage

Engine Stored for Less Than 30 Days

1. Allow the engine to cool completely before storage.
2. Clean engine according to the instructions above.
3. To extend the fuel storage life add a properly formulated fuel stabilizer to the tank.
4. Ensure the fuel valve is in the “OFF” position.

Engine Stored for More Than 30 Days

1. Add a properly formulated fuel stabilizer to the tank.
2. Run the engine for a few minutes so the treated fuel cycles through the fuel system and carburetor.
3. Turn the fuel valve to the “OFF” position.
4. Let the engine run until fuel starvation has stopped the engine. This usually takes a few minutes.
5. The engine needs to cool completely before cleaning and storage.
6. Clean the engine according to the *Maintenance* section.
7. Change the oil.
8. Remove the spark plug and pour about 14.8 mL (1/2 ounce) of oil into the cylinder. Using the Recoil, crank the engine slowly to distribute the oil and lubricate the cylinder.
9. Reattach the spark plug.

⚠ WARNING

Always shut off the engine, disconnect the spark plug before cleaning, adjusting, or repairing the tiller.

SPECIFICATIONS

Tiller Specifications

Model	201098
Tine Diameter	15 in. (38.1 cm)
Tilling Width (in.)	22 in. (55.9 cm)
Tilling Depth (in.)	10 in. (25.4 cm)
Tilling Depth Adjustments	1.6 in. (4.1 cm) Increments
Wheel Diameter	15 in. (38.1 cm)
Transmission Gear Oil	API rated GL-4 or GL-5 Viscosity of SAE 140, SAE 85W-140 or SAE 80W-90
Net Weight	200 lb. (90.8 kg)
Length	60.4 in. (153.5 cm)
Width	24 in. (61 cm)
Height	42.1 in. (107 cm)

Engine Specifications

Displacement	224 cc
Type	4-Stroke OHV
Fuel Capacity	0.82 gal. (3.1 L)
Oil Capacity	0.5 US qt. (500 mL)
Oil Type	10W-30

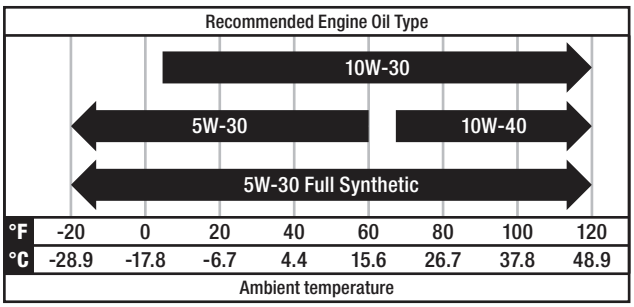

NOTICE

Temperature will affect engine oil and engine performance. Change the type of engine oil used based on temperature shown in the *"Recommended Engine Oil Type"* table.

Fuel Specifications

Use regular unleaded gasoline with a minimum octane rating of 87 and an ethanol content of less than 10% by volume. DO NOT USE E15 or E85. DO NOT OVERFILL.

Spark Plug Specifications

OEM Type	F6RTC
Replacement Type	BPR6ES or equivalent
Gap	0.023-0.031 in. (0.6-0.8 mm)

Valve Specifications

Intake Clearance	0.0039-0.0059 in. (0.1-0.15 mm)
Exhaust Clearance	0.0059-0.0079 in. (0.15-0.2 mm)

NOTICE

A technical bulletin regarding valve adjustment procedures is available at www.championpowerequipment.com.

NOTICE

An important message about temperature: Your product is designed and rated for continuous operation at ambient temperatures up to 104°F (40°C). When needed, it may be operated at temperatures ranging from 5°F (-15°C) to 122°F (50°C) for short periods of time. If exposed to temperatures outside this range during storage, it should be brought back within this range before operation. In any event, the product must always be operated outdoors, in a well-ventilated area and away from doors, windows and vents.

TROUBLESHOOTING

Problem	Cause	Solution
Engine does not start	Spark plug wire disconnected.	Reconnect wire.
	Engine Throttle Control Lever incorrectly set.	Put lever in START position.
	Fuel tank empty.	Add fuel.
	Choke control (if so equipped) in incorrect position.	Move to CHOKE position.
	Stale gasoline.	Drain fuel and add fresh fuel.
	Dirty air filter.	Clean or replace filter.
	Defective or incorrectly gapped spark plug.	Inspect spark plug.
	Carburetor out of adjustment.	Contact Technical Support Team.
	Misadjusted throttle control.	Contact Technical Support Team.
	Dirt or water in fuel tank.	Contact Technical Support Team.
Engine runs poorly	Defective or incorrectly gapped spark plug.	Inspect spark plug.
	Dirty air filter(s).	Clean or replace.
	Carburetor out of adjustment.	Contact Technical Support Team.
	Stale gasoline.	Replace with fresh gasoline.
	Dirt or water in fuel tank.	Contact Technical Support Team.
	Engine cooling system clogged.	Clean air cooling system.
Engine overheats	Engine cooling system clogged.	Clean air cooling area.
	Carburetor out of adjustment.	Contact Technical Support Team.
	Oil level is low.	Check oil level.
Engine does not shut off	Misadjusted throttle control or ignition switch.	Contact Technical Support Team.
Wheels and Tines will not turn	Improper use of controls.	Review controls section.
	Worn, broken, or misadjusted drive belt(s).	See “Checking and Adjusting Forward Drive Belt Tension” or “Belt Tension Adjustment”.
	Internal transmission wear or damage.	Contact local dealer or the factory.
	Bolt loose in transmission pulley.	Tighten bolt.
Tines turn, but wheels don’t	Wheel Drive Pins not in WHEEL DRIVE.	See “Wheel Drive Pins”.
	Bolt loose in transmission pulley.	Tighten bolt.
	Internal transmission wear or damage.	Contact Technical Support Team.
Wheels Turn, but tines don’t	Tine holder mounting hardware missing.	Replace hardware.
	Bolt loose in transmission pulley.	Tighten bolt.
	Internal transmission wear or damage.	Contact Technical Support Team.
Poor tilling performance	Worn tines.	See “Tines” section.
	Improper Depth Regulator setting.	See “Depth Regulator Lever Adjustment”.
	Incorrect throttle setting.	Adjust throttle on engine or speed control on handelbar to highest setting.
	Forward Drive Belt slipping.	See “Checking and Adjusting Forward Drive Belt Tension” or “Belt Tension Adjustment”.

Difficulty Starting Engine (Recoil)

Problem	Cause	Solution
Something wrong with the fuel system: fuel supply is not smooth or no fuel supply	There is no enough fuel in fuel tank and fuel cock is closed.	Fill fuel, open fuel cock.
	Air vent in the fuel filler cap is clogged.	Dredge air vent.
	Fuel cock is clogged.	Clean first and then dredge.
	Improper or clogged main oil flow hole.	Readjust or clean. Blow to clear through.
	Needle valve is not closed properly or start hole is clogged.	Dismantle needle valve and repair, clean. Blow to get through.
	Float is damaged or sticking.	Repair float.
	Fuel is too filthy or deteriorated.	Replace.
	There is water in fuel.	Replace.
	Too much fuel in engine.	Drain extra fuel. Dry up spark plug electrodes.
	Wrong fuel brand.	Select proper fuel brand corresponding with the requirements.
No spark	Too much carbon deposit and dirt around electrodes.	Clear carbon deposits.
	Too much carbon deposit and dirt around electrodes.	Replace spark plug.
	Too much carbon deposit and dirt around electrodes.	Adjust to proper value.
Abnormal cylinder compression	Piston ring is at its wear limit.	Replace.
	Piston ring is broken.	Replace.
	Piston ring is sticking.	Clear up carbon fouling.
	Spark plug is not installed tightly or gasket is missing.	Tighten with a gasket in.
	Air leakage between cylinder block and cylinder head.	Check cylinder gasket and the flatness of the surface where the cylinder block contacts the cylinder head.
		Tighten cylinder head bolts in stipulated order to stipulated torque.
	Air leakage in the valves.	Check valve clearance and tightness. Repair if necessary.

If engine still doesn't start, contact our Technical Support Team for service and/or repair.

⚠ WARNING

- When testing the spark plug, never hold the high-voltage wire of the spark plug with wet hand.
- Make sure there is no spilled fuel outside the engine and that the spark plug isn't covered with fuel.
- To prevent fire, keep sparks far away from the spark plug mounting hole.

Gasoline Engine: No Power

Problem	Cause	Solution
When increasing throttle, speed increase slow (or even decreases and stops running)/poor compression	Air in fuel line or fuel line clogged.	Exhaust air or dredge fuel line.
	Main oil flow hole is not adjusted properly.	Readjust.
	In carburetor, needle valve hole and main oil flow hole clogged.	Clean and blow to clear.
	Fuel cock is clogged up.	Clean/replace damaged part.
	Too much carbon deposit in combustion chamber.	Clear away.
	Too much carbon fouling in muffler and exhaust pipe.	Clear away.
	Air cleaner is clogged up.	Clean air cleaner filter element.
	Intake pipe is leaking.	Repair or replace.
	Piston or cylinder or piston ring is worn.	Replace the worn part.
	Air leakage from the surface where the cylinder block contacts the cylinder head.	Replace cylinder gasket.
	Too big or too small valve clearance.	Readjust.
	Valve tightness is poor.	Repair.

Gasoline Engine Running Roughly

Problem	Cause	Solution
Knocking sound	Piston, cylinder or piston ring is worn excessively.	Replace the worn part.
	Piston pin and piston pin hole are worn excessively.	Replace piston or piston pin.
	Piston pin and piston pin hole are worn excessively.	Replace tie rod.
	Roller bearing for crankshaft main shaft is worn.	Replace roller bearing.
Abnormal combustion	Engine is too hot.	Shut down and allow engine to cool off before troubleshooting.
	Too much carbon deposit in combustion chamber.	Clear away.
	Improper gasoline brand or low gasoline quality.	Replace with qualified gasoline.
Spark plug	There is water in float chamber.	Clean.
	Improper spark plug electrodes clearance.	Adjust.
	Faulty spark plug.	Replace spark plug.

Stops Suddenly When Running

Problem	Cause	Solution
Stops suddenly while running	Operated on a hill.	Keep engine oil level within targets and operate tiller on inclines less than 15 degrees, or disconnect oil sensor wire temporarily.
	Unit bounces or hops.	
	Pulling back swiftly on the handlebars.	
	Fuel is empty.	Refill fuel.
	Carburetor is clogged.	Check fuel line and dredge.
	Float is leaking.	Repair.
	Needle valve is stuck.	Dismantle float chamber and eliminate.
	Spark plug is punctured, or short-circuited by carbon deposit.	Replace spark plug.
	Side electrode of spark plug is dropped out.	Replace spark plug.
	Ignition coil is punctured or short-circuited.	Replace ignition coil.
	Cylinder is seriously scored and valve dropped out.	Repair or replace damaged parts.

Engine is Overheating

Problem	Cause	Solution
Engine is overheating	Oil level is low	Fill oil to proper level
	Exhaust pipe blocked up	Clean exhaust pipe
	Shroud leaking	Repair damaged part
	Cooling fins blocked by foreign matter	Clean cooling fins
	Cooling fan loosened and malfunctioning.	Reinstall properly
	Connection rod deformation has made piston and cylinder bushing side wear	Replace connection rod
	Cylinder or piston or piston ring is worn and made a space between cylinder and crankcase	Replace the worn parts
	Crankshaft main bearing burned out	Replace main bearing
Beating sound	Piston, piston ring or cylinder is worn	Replace the worn part
	Connection rod or piston pin and piston pin hole are worn	Replace the worn part
	Crankshaft main neck is worn	Replace the worn bearing
	Piston ring is broken	Replace piston ring
Metal beating sound when abnormal combustion occurs	Too much carbon deposit in combustion chamber	Clear away carbon deposit
	Insufficient electrode clearance of spark plug	Adjust electrode clearance properly
Other	Improper valve clearance	Readjust valve clearance properly
	Fly wheel is not connected with crankshaft tightly	Tighten

For further technical support:

Technical Support Team
Toll Free 1-877-338-0999
support@championpowerequipment.com

WARRANTY*

CHAMPION POWER EQUIPMENT

2 YEAR LIMITED WARRANTY

Warranty Qualifications

To register your product for warranty and FREE lifetime call center technical support please visit:

https://www.championpowerequipment.com/register

To complete registration you will need to include a copy of the purchase receipt as proof of original purchase. Proof of purchase is required for warranty service. Please register within ten (10) days from date of purchase.

Repair/Replacement Warranty

CPE warrants to the original purchaser that the mechanical and electrical components will be free of defects in material and workmanship for a period of two years (parts and labor) from the original date of purchase and 180 days (parts and labor) for commercial and industrial use. Transportation charges on product submitted for repair or replacement under this warranty are the sole responsibility of the purchaser. This warranty only applies to the original purchaser and is not transferable.

Do Not Return The Unit To The Place Of Purchase

Contact CPE's Technical Service and CPE will troubleshoot any issue via phone or e-mail. If the problem is not corrected by this method, CPE will, at its option, authorize evaluation, repair or replacement of the defective part or component at a CPE Service Center. CPE will provide you with a case number for warranty service. Please keep it for future reference. Repairs or replacements without prior authorization, or at an unauthorized repair facility, will not be covered by this warranty.

Warranty Exclusions

This warranty does not cover the following:

Normal Wear

Products with mechanical and electrical components need periodic parts and service to perform well. This warranty does not cover repair when normal use has exhausted the life of a part or the equipment as a whole.

Installation, Use and Maintenance

This warranty will not apply to parts and/or labor if the product is deemed to have been misused, neglected, involved in an accident, abused, loaded beyond the product's limits or modified. Normal maintenance is not covered by this warranty and is not required to be performed at a facility or by a person authorized by CPE.

Other Exclusions

This warranty excludes:

- Cosmetic defects such as paint, decals, etc.
- Wear items such as filter elements, o-rings, belts, trimmer line (all such items where applicable), etc.
- Failures due to acts of God and other force majeure events beyond the manufacturer's control.
- Problems caused by parts that are not original OEM or recommended replacement parts by Champion Power Equipment.

Limits of Implied Warranty and Consequential Damage

Champion Power Equipment disclaims any obligation to cover any loss of time, use of this product, freight, or any incidental or consequential claim by anyone from using this product. THIS WARRANTY AND THE ATTACHED U.S. EPA and/or CARB EMISSION CONTROL SYSTEM WARRANTIES (WHEN APPLICABLE) ARE IN LIEU OF ALL OTHER WARRANTIES, EXPRESS OR IMPLIED, INCLUDING WARRANTIES OF MERCHANTABILITY OR FITNESS FOR A PARTICULAR PURPOSE.

A unit provided as an exchange will be subject to the warranty of the original unit. The length of the warranty governing the exchanged unit will remain calculated by reference to the purchase date of the original unit.

This warranty gives you certain legal rights which may change from state to state or province to province. Your state or province may also have other rights you may be entitled to that are not listed within this warranty.

Contact Information

Address

Champion Power Equipment, Inc.
6370 S Pioneer Way, Unit 101
Las Vegas, NV 89113 USA
www.championpowerequipment.com

Customer Service

Toll Free: 1-877-338-0999
info@championpowerequipment.com
Fax no.: 1-562-236-9429

Technical Service

Toll Free: 1-877-338-0999
tech@championpowerequipment.com
❗ EMERGENCY 24 HOUR SUPPORT: 1-562-204-1188

*Except as otherwise stipulated in any of the following enclosed Emission Control System Warranties (when applicable) for the Emission Control System: U.S. Environment Protection Agency (EPA) and/or California Air Resources Board (CARB).

CHAMPION POWER EQUIPMENT, INC. (CPE)
AND THE UNITED STATES ENVIRONMENTAL PROTECTION AGENCY (U.S. EPA.)
EMISSION CONTROL SYSTEM WARRANTY

Your Champion Power Equipment (CPE) engine complies with U.S. EPA emissions regulations.

YOUR WARRANTY RIGHTS AND OBLIGATIONS:

The U.S. EPA and CPE are pleased to explain the Federal Emission Control Systems Warranty on your 2026 small off-road engine and engine powered equipment. New equipment that use small off-road engines must be designed, built and equipped to meet U.S. EPA regulations.

CPE must warrant the exhaust and evaporative emission control system on your small off-road engine for the period listed below, provided there has been no abuse, neglect, unapproved modification, or improper maintenance of your equipment.

Your emission control system may include parts such as: carburetors, fuel tanks, fuel lines, (for liquid fuel and fuel vapors), fuel caps, valves, canisters, filters, clamps, connectors, and other associated components. Also included may be the fuel-injection system, the ignition system, catalytic converter and other emission related assemblies. Where a warrantable condition exits, CPE will repair your small off-road engine at no cost to you including diagnosis, parts and labor.

MANUFACTURER'S EMISSION CONTROL SYSTEM WARRANTY COVERAGE:

This emission control system is warranted for two years, subject to provision set forth below. If any emission related part on your engine is defective, the part will be repaired or replaced by CPE.

OWNER WARRANTY RESPONSIBILITIES:

As the small off-road engine owner, you are responsible for the performance of the required maintenance listed in your Owner's Manual. CPE recommends that you retain all your receipts covering maintenance on your small off-road engine, but CPE cannot deny warranty coverage solely for the lack of receipts or for your failure to ensure the performance of all scheduled maintenance.

As the small off-road engine owner, you should be aware that CPE may deny you warranty coverage if your small off-road engine or a part has failed due to abuse, neglect, improper maintenance or unapproved modifications.

You are responsible for presenting your small off-road engine to an Authorized CPE distribution center, service center or alternate service outlet as described in (3)(f) below or CPE dealer or CPE, Las Vegas, NV. as soon as the problem exists. The warranty repairs shall be completed in a reasonable amount of time, not to exceed 30 days.

If you have any questions regarding your warranty coverage, you should contact:

Champion Power Equipment, Inc.
Customer Service
6370 S Pioneer Way, Unit 101
Las Vegas, NV 89113
1-877-338-0999
tech@championpowerequipment.com

EMISSION CONTROL SYSTEM WARRANTY

The following are specific provisions relative to your Exhaust and Evaporative Emission Control System (ECS) Warranty Coverage.

1. **APPLICABILITY:** This warranty shall apply to 1997 and later model year small off-road engines.The ECS Warranty Period shall begin on the date the new engine is delivered to its original, end-use purchaser, and shall continue for 24 consecutive months thereafter.

2. **GENERAL EMISSIONS WARRANTY COVERAGE**
   CPE warrants to the original, end-use purchaser of the new engine or equipment and to each subsequent purchaser that each of its small off-road engines is:

   2a. Designed, built and equipped to conform to U.S. EPA emissions standards for spark-ignited engines at or below 19 kilowatts.

   2b. Free from defects in materials and workmanship that cause the failure of a warranted part to be identical in all material respects to the part as described in the engine manufacturer's application for certification for a period of two years.

3. **THE WARRANTY ON EMISSION-RELATED PARTS WILL BE INTERPRETED AS FOLLOWS:**

   3a. Any warranted part that is not scheduled for replacement as required maintenance in the Owner's Manual shall be warranted for the ECS Warranty Period. If any such part fails during the ECS Warranty Period, it shall be repaired or replaced by CPE according to Subsection "d" below. Any such part repaired or replaced under the ECS Warranty shall be warranted for any remainder of the ECS Warranty Period.

   3b. Any warranted, emissions-related part which is scheduled only for regular inspection as specified in the Owner's Manual shall be warranted for the ECS Warranty Period. A statement in such written instructions to the effect of "repair or replace as necessary", shall not reduce the ECS Warranty Period. Any such part repaired or replaced under the ECS Warranty shall be warranted for the remainder of the ECS Warranty Period.

   3c. Any warranted, emissions-related part which is scheduled for replacement as required maintenance in the Owner's Manual shall be warranted for the period of time prior to the first scheduled replacement point for that part. If the part fails prior to the first scheduled replacement, the part shall be repaired or replaced by CPE according to Subsection "d" below. Any emissions-related part repaired or replaced under the ECS Warranty, shall be warranted for the remainder of the ECS Warranty Period prior to the first scheduled replacement point for such emissions-related part.

   3d. Repair or replacement of any warranted, emissions-related part under this ECS Warranty shall be performed at no charge to the owner at a CPE Authorized Service Outlet.

   3e. The owner shall not be charged for diagnostic labor which leads to the determination that a part covered by the ECS Warranty is in fact defective, provided that such diagnostic work is performed at a CPE Authorized Service Outlet.

   3f. CPE shall pay for covered emissions warranty repairs at non-authorized service outlets under the following circumstances:

      i. The service is required in a population center with a population over 100,000 according to U.S. Census 2000 without a CPE Authorized Service Outlet AND

      ii. The service is required more than 100 miles from a CPE Authorized Service Outlet. The 100 mile limitation does not apply in the following states: Alaska, Arizona, Colorado, Hawaii, Idaho, Montana, Nebraska, Nevada, New Mexico, Oregon, Texas, Utah and Wyoming.

   3g. CPE shall be liable for damages to other original engine components or approved modifications proximately caused by a failure under warranty of an emission-related part covered by the ECS Warranty.

   3h. Throughout the ECS Warranty Period, CPE shall maintain a supply of warranted exhaust and evaporative emission-related parts sufficient to meet the expected demand for such exhaust and evaporative emission-related parts.

   3i. Any CPE Authorized and approved emission-related replacement part may be used in the performance of any ECS Warranty maintenance or repair and will be provided without charge to the owner. Such use shall not reduce CPE's warranty obligation.

   3j. Unapproved add-on or modified parts may not be used to modify or repair a CPE engine. Such use voids this ECS Warranty and shall be sufficient grounds for disallowing an ECS Warranty claim. CPE shall not be liable hereunder for failures of any warranted parts of a CPE engine caused by the use of such an unapproved add-on or modified part.

EMISSION-RELATED PARTS INCLUDE THE FOLLOWING: (using those portions of the list applicable to the engine)

Systems covered by this warranty	Parts Description
Fuel Metering System	Carburetor and internal parts (and/or pressure regulator or fuel injection system) Air/fuel ratio feedback and control system. Cold start enrichment system.
Air Induction System	Controlled hot air intake system. Air Filter, Intake manifold.
Ignition System	Spark plug. Magneto or electronic ignition system. Spark advance/retard system.
Exhaust Gas Recirculation (EGR) System	EGR valve body, and carburetor spacer if applicable. EGR rate feedback and control system.
Air Injection System	Air pump or pulse valve. Valves affecting distribution of flow. Distribution manifold.
Catalyst or Thermal Reactor System	Catalytic converter. Thermal reactor. Exhaust manifold.
Particulate Controls	Traps, filters, precipitators, and any other device used to capture particulate emissions.
Miscellaneous Parts	Vacuum, temperature, and time sensitive valves and switches. Electronic controls. Hoses, belts, connectors, and assemblies.
Evaporative Controls	Fuel Tank, Fuel Cap, Fuel Lines (for liquid fuel & fuel vapors), Fuel Line Fittings, Clamps, Pressure Relief Valves, Control Valves, Control Solenoids, Electronic Controls, Vacuum Control Diaphragms, Control Cables, Control Linkages, Purge Valves, Gaskets, Liquid/Vapor Separator, Carbon Canister, Canister Mounting Brackets, Carburetor Purge Port Connector.

TO OBTAIN WARRANTY SERVICE:

You must take your CPE engine or the product on which it is installed, along with your warranty registration card or other proof of original purchase date, at your expense, to any Champion Power Equipment dealer who is authorized by Champion Power Equipment, Inc. to sell and service that CPE product during his normal business hours. Alternate service locations defined in Section (3)(f) above must be approved by CPE prior to service. Claims for repair or adjustment found to be caused solely by defects in material or workmanship will not be denied because the engine was not properly maintained and used.

If you have any questions regarding your warranty rights and responsibilities, or to obtain warranty service, please write or call Customer Service at Champion Power Equipment, Inc.

Champion Power Equipment, Inc.
6370 S Pioneer Way, Unit 101
Las Vegas, NV 89113
1-877-338-0999
Attn.: Customer Service
tech@championpowerequipment.com