CAMBRIDGE

MINX MIN12 COMPACT SPEAKER



Published at 22 December 2022. Last revised at 5 August 2026

Table of Contents

- Introduction
- What's included with the Minx MIN12?
- Front
- Rear
- Installation instructions
- Suggested setups
- Technical specifications
- Frequently asked questions
- Troubleshooting

Introduction

Thank you for purchasing this Cambridge Audio Minx MIN12 loudspeaker. We hope that you enjoy many years of listening pleasure from it. Your loudspeakers can only be as good as the system it is connected to. Please do not compromise on your amplifier or cabling. Naturally we particularly recommend amplification from the Cambridge Audio range, which has been designed to the same exacting standards as our loudspeakers. Your dealer can also supply excellent quality speaker cable to ensure your system realises its full potential.

Thank you for taking the time to read this manual; we do recommend you keep it for future reference.

© Copyright Cambridge Audio Ltd .

For upcoming news on future products, software updates and exclusive offers, make sure you register your product at

http://www.cambridgeaudio.com/register

What's included with the Minx MIN12?

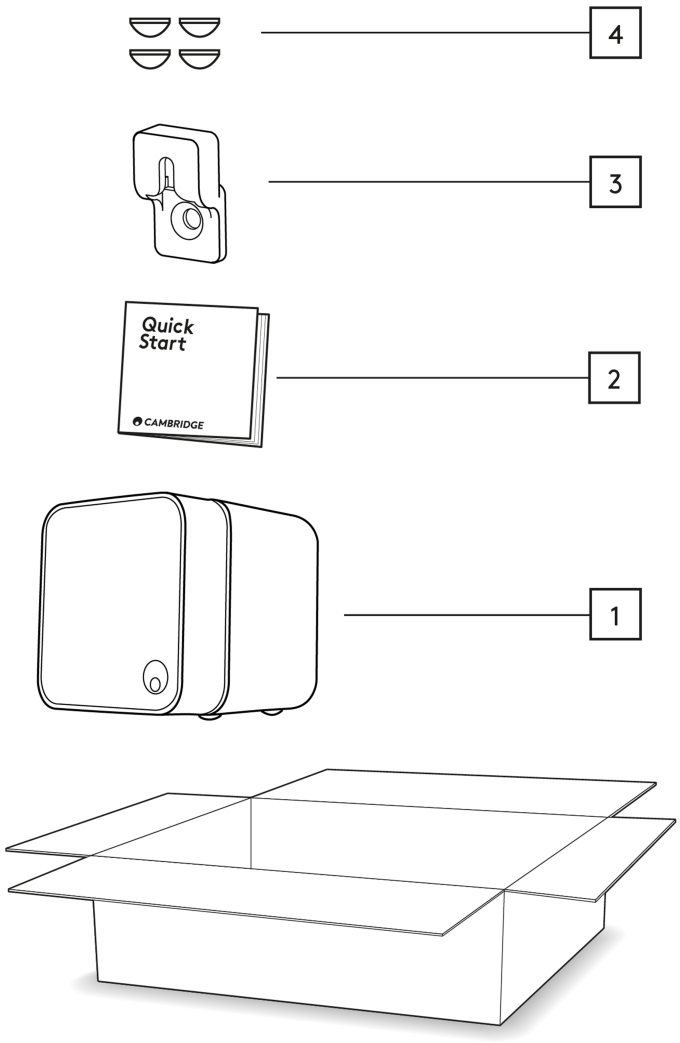

1. 1 x MIN12 Compact Speaker

2. Quick Start Guide

3. Keyhole Bracket

4. 4 x Transparent Pad.

Front

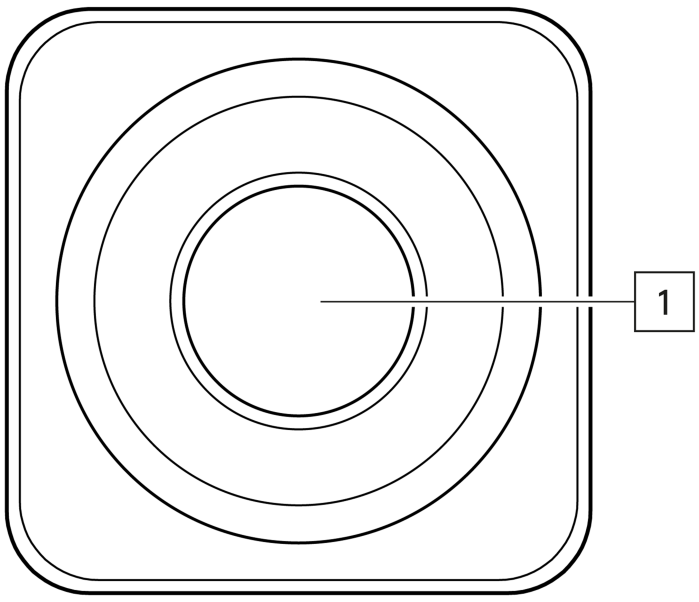

1. 2.25" BMR Driver.

Rear

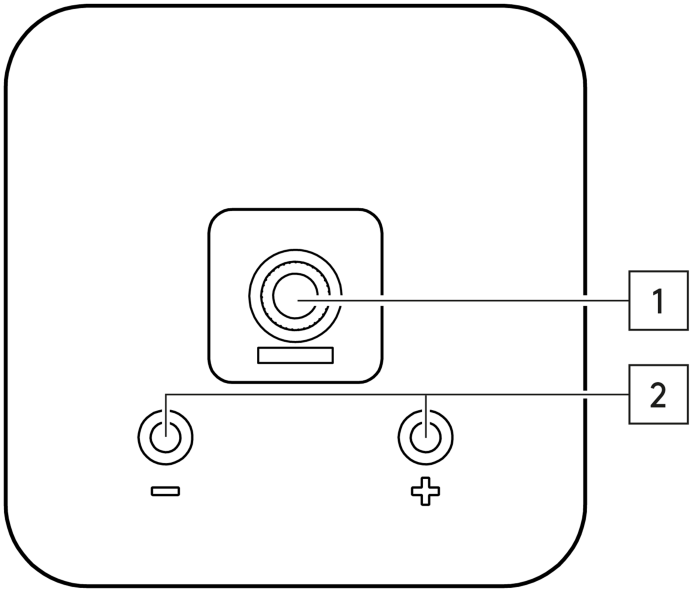

1. Mounting Screw Thread.

2. +/- Speaker Connection Terminals.

Installation instructions

1. Firstly, ensuring to match the polarity/colour coding, connect the supplied speaker terminals to the speaker outputs of your amplifier by unscrewing the ends, and securing the speaker cable in the available hole on each terminal. These terminals can then be installed into the rear of the MIN12 with the cables connected.

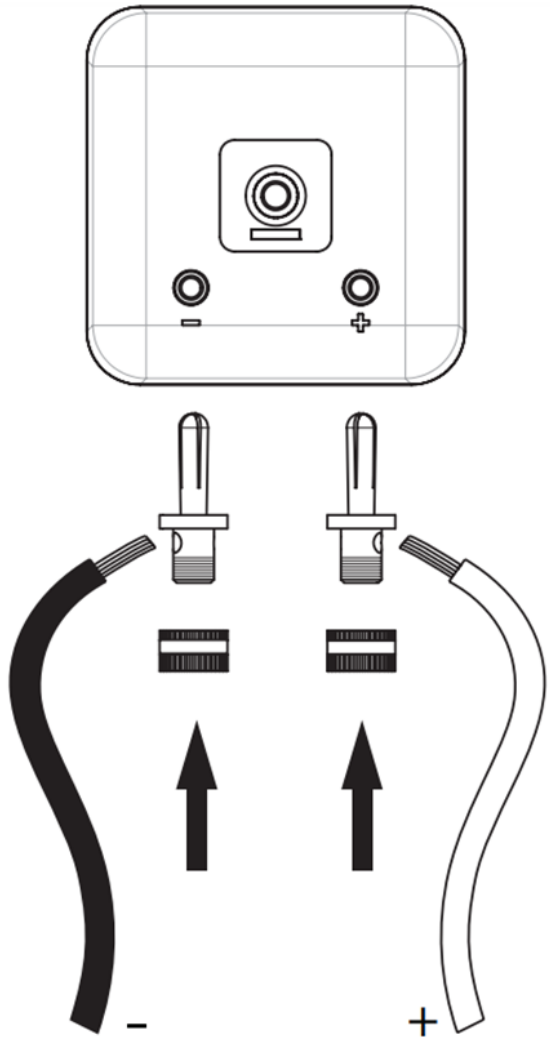

2. If mounting the MIN12 speakers to a wall you will need to attach the included keyhole bracket using the mounting screw to the rear of the speaker.

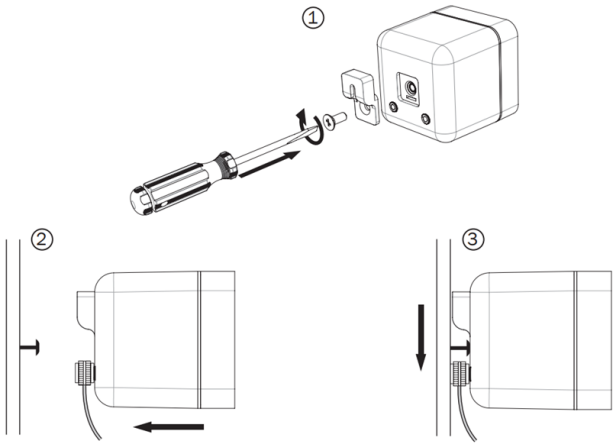

3. Alternatively, we offer several other mounting solutions including a pivoting wall mount, desk stand, and floor stand.

Suggested setups

The Minx MIN12 speakers can be used as part of an array of different setups depending on your individual requirements. Please see several recommended setups below utilising the MIN12's, and other items within the Minx range such as the MIN22 speakers, and X201 subwoofer.

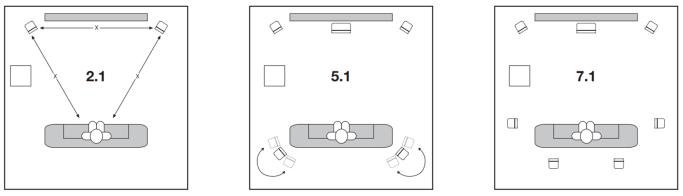

When using the MIN12 speakers with for TV and film, we recommend positioning the speakers above or below the screen, angled towards the listener where possible.

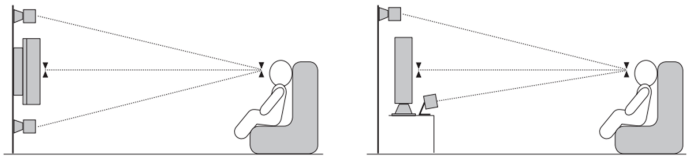

Technical specifications

Sensitivity (SPL)
86dB

Frequency Response
150Hz - 20kHz

Impedance
8 Ohms

Drivers
1 x 2.25" BMR Driver

Recommended Amplifier Power
25 - 200 Watts

Speaker Dimensions (H x W x D)
78 x 78 x 85mm.

Weight
0.43kg (0.95lbs)

Frequently asked questions

What is meant by speaker sensitivity?

Speaker sensitivity is the level produced by the speaker at one meter, when supplied with one watt of power from an amplifier. It's a way of describing how well the speaker produces acoustic energy, based on a given input. The level is measured in dB SPL – this shorthand for 'sound pressure level' – sound is basically fluctuations in air pressure, so any time you see SPL, this means 'sound in the real world'. So, let's say we have a speaker with an 87dB sensitivity, and a speaker with a 90dB sensitivity – the 90dB speaker is going to be considerably louder, as every 3dB added represents a doubling of power.

What is a crossover?

Most speakers will have multiple drivers. A driver is sometimes called a transducer, which is a device that turns one type of energy into another – in this case, electrical energy to sound energy. In a loudspeaker, it is often the

case that we might want multiple drivers – one to handle low-end, one to handle the mid-range, and one to handle the treble. This latter driver is often called a tweeter. To get the benefit of this arrangement, we need to split the signal into different frequency components. The circuit that does this is called a crossover.

What is impedance?

You will often see impedance mentioned when researching speakers, and amplifiers. Impedance is basically resistance measured at a given frequency, given as a value in Ohms (Ω), and is incredibly important to consider when setting up an audio system as it determines the 'load' placed on an amplifier by the speakers.

For example, let's say we have an amplifier that is rated to deliver 100W into an 8Ω speaker load. If we were to then use speakers with an impedance of 4Ω with the same amplifier, the amp would then need to supply 200W as a halving of the impedance results in a doubling of the required power due to the reduction of the load on the amplifier.

In a situation such as this, if the amp can't supply the required power for a lower impedance, then it can result in overheating, and damage to the amplifier and speakers.

For this reason, it is important to pay attention to amplifier specifications, and suggested impedance ratings.

Troubleshooting

No sound through one or both channels.
• Check that the amplifier is turned on.
• Ensure that the correct input source is selected on the amplifier.
• Confirm that all connections between the amplifier and loudspeakers are secure.
• Check that the connections between the source equipment and amplifier are secure.
• Check the polarity of the loudspeaker connections.
• Check that the volume control is set correctly on the amplifier.

There is distorted or inconsistent sound.
• Confirm that all connections between the amplifier and loudspeakers are secure.
• Check the polarity of the loudspeaker connections.
• Check that the connections between the source equipment and amplifier are secure.