ES30 OUTDOOR SPEAKER



Published at 22 December 2022. Last revised at 5 August 2026

Table of Contents

- Introduction
- What's included with the ES30?
- Technical specifications
- Frequently asked questions

- Installation instructions
- Troubleshooting

Introduction

Thank you for purchasing these Cambridge Audio Incognito outdoor speakers. We hope that you enjoy many years of listening pleasure from them. Your speakers can only be as good as the system it is connected to. Please do not compromise on your amplifier or cabling. Naturally we particularly recommend amplification from the Cambridge Audio range, which has been designed to the same exacting standards as our speakers. Your dealer can also supply excellent quality speaker cable to ensure your system realises its full potential. Thank you for taking the time to read this manual, we do recommend you keep it for future reference.

This document contains proprietary information protected by copyright. All rights are reserved. No part of this manual may be reproduced by any mechanical, electronic or other means, in any form, without prior written permission of the manufacturer. All trademarks and registered trademarks are the property of their respective owners.

© Copyright Cambridge Audio Ltd .

For upcoming news on future products, software updates and exclusive offers, make sure you register your product at

http://www.cambridgeaudio.com/register

What's included with the ES30?

1. 1 x ES30 Outdoor Speaker

2. 1 x Mounting Bracket.

Installation instructions

Before installing your ES30 outdoor speakers, consider their positioning and requirements for cabling. Where possible use existing cover to minimise direct exposure to the elements and ensure that the wall being used for mounting will be able to support the weight of the speaker.

1. Firstly, mount the mounting bracket horizontally or vertically in your desired location, then feed your speaker cable through the bracket prior to connection.

2. With your amplifier turned off, connect the speaker using the terminals located on the rear panel. Please ensure that you match the polarity of each connection between speaker and amplifier.

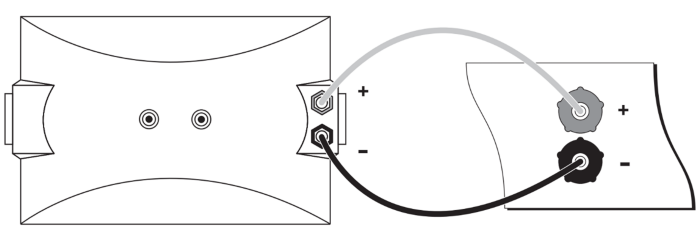

3. Loosely fit the speaker to the mounting bracket and adjust it to your desired position. We would recommend angling the speaker downwards slightly to minimise direct exposure to the elements. Once you're happy with the positioning, tighten the two knobs to secure the speaker.

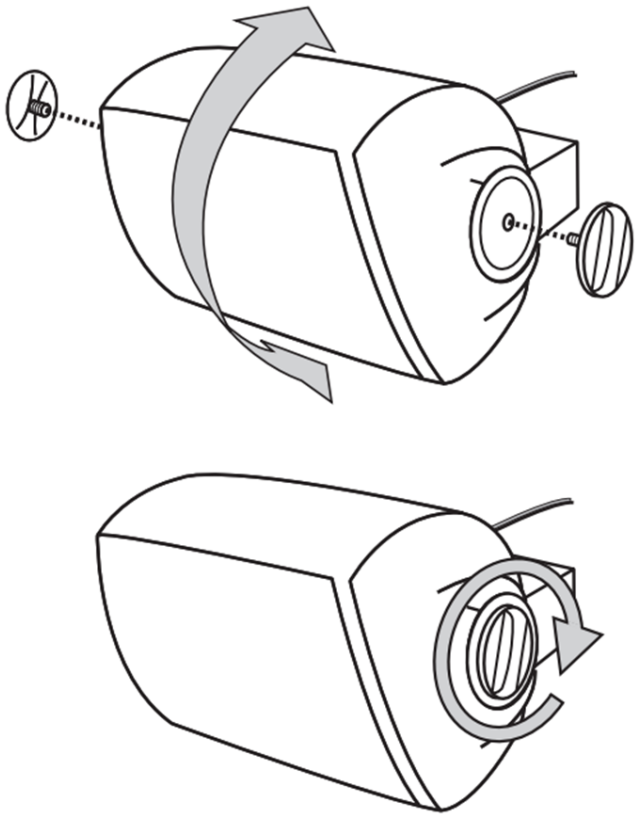

Technical specifications

Sensitivity (SPL)
90dB

Frequency Response
55Hz - 20kHz

Impedance
4 - 8 Ohms

Drivers
1 x 6.5" injection moulded cone woofer.

1 x 1" anodized aluminium dome tweeter.

Recommended Amplifier Power
10 - 120 Watts

Speaker Dimensions (H x W x D)
330 x 202 x 198mm.

Weight
3.4kg (7.4lbs)

Frequently asked questions

What is meant by speaker sensitivity?

Speaker sensitivity is the level produced by the speaker at one meter, when supplied with one watt of power from an amplifier. It's a way of describing how well the speaker produces acoustic energy, based on a given input. The level is measured in dB SPL – this shorthand for 'sound pressure level' – sound is basically fluctuations in air pressure, so any time you see SPL, this means 'sound in the real world'. So, let's say we have a speaker with an 87dB sensitivity, and a speaker with a 90dB sensitivity – the 90dB speaker is going to be considerably louder, as every 3dB added represents a doubling of power.

What is a crossover?

Most speakers will have multiple drivers. A driver is sometimes called a transducer, which is a device that turns one type of energy into another – in this case, electrical energy to sound energy. In a loudspeaker, it is often the case that we might want multiple drivers – one to handle low-end, one to handle the mid-range, and one to handle the treble. This latter driver is often called a tweeter. To get the benefit of this arrangement, we need to split the signal into different frequency components. The circuit that does this is called a crossover.

What is impedance?

You will often see impedance mentioned when researching speakers, and amplifiers. Impedance is basically resistance measured at a given frequency, given as a value in Ohms (Ω), and is incredibly important to consider when setting up an audio system as it determines the 'load' placed on an amplifier by the speakers.

For example, let's say we have an amplifier that is rated to deliver 100W into an 8Ω speaker load. If we were to then use speakers with an impedance of 4Ω with the same amplifier, the amp would then need to supply 200W as a halving of the impedance results in a doubling of the required power due to the reduction of the load on the amplifier.

In a situation such as this, if the amp can't supply the required power for a lower impedance, then it can result in overheating, and damage to the amplifier and speakers.

For this reason, it is important to pay attention to amplifier specifications, and suggested impedance ratings.

Troubleshooting

No sound through one or both channels.
- Check that the amplifier is turned on.
- Ensure that the correct input source is selected on the amplifier.
- Confirm that all connections between the amplifier and loudspeakers are secure.
- Check that the connections between the source equipment and amplifier are secure.
- Check the polarity of the loudspeaker connections.
- Check that the volume control is set correctly on the amplifier.

There is distorted or inconsistent sound.
- Confirm that all connections between the amplifier and loudspeakers are secure.
- Check the polarity of the loudspeaker connections.
- Check that the connections between the source equipment and amplifier are secure.