

Premium Undersink Water Filtration System

Installation Manual

Model Nos.: FUS100A11SS, FUS100A16SS, FUS100A22SS, FUS100A26SS

Table of Contents

Safety Information 3

Package Contents 4

Materials Needed 4

Operational and Technical Specifications 5

Performance Data Sheet 5

Installation 6

Installation Overview 6

Step 1: Establish Filter Mounting Location 6

Step 2: Mount the Filter Head Bracket 6

Step 3: Connect to the Cold Water Supply 7

Step 4: Connect to Faucet 7

Step 5: Make the Filter Head Connections 8

Step 6: Complete the Installation 8

Maintenance 9

Supply Source for Replacement Components 9

Filter Replacement Schedule 9

Replace the Filter Cartridge 10

Replace the Battery 11

Troubleshooting 12

Warranty 13

Brio Water Technology, Inc.
768 Turnbull Canyon Rd.
City of Industry, CA 91745
(800) 781-1680

Safety Information

WARNING: To reduce risk of injury and property damage, you must read this entire guide before assembling, installing, and operating the filtration system.

- The installation must comply with state and local laws and regulations.
- Product must be installed indoors. Do NOT use outdoors.
- For use only with cold water.
- Use only the hoses supplied with the unit; old hoses should not be reused.
- Keep the product in a dry place away from direct sunlight.
- Do NOT store in or expose the product to temperatures lower than 32 °F (0 °C), as this can cause cracking and water leakage. The ideal operating temperature range is 35–100 °F (2–38 °C).
- Keep the product away from heat sources or open flames.
- Do NOT immerse the product in water or other liquids.
- Do NOT use with water that is microbiologically unsafe or of unknown quality without adequate disinfection before or after the product. If using well water, make sure the feedwater has been processed through a pre-filtration system, otherwise, large particles in the well water will clog the filter and shorten filter life.
- The product is suitable for municipal tap water. The best working pressure for this product is 10–100 psi (68.95–689.5 kPa).
- To ensure the health of you and your family, regularly replace the filters.
- In case of a water outage or pipeline maintenance, close the water inlet valve; otherwise, the service life of the filter may be affected. When re-supplying water, turn on the faucet and allow the water to run for 10 minutes before dispensing.
- Systems certified for cyst reduction may be used on disinfected waters that may contain filterable cysts.

WARNING: KEEP OUT OF REACH OF CHILDREN

- This product contains a coin/button cell battery. Swallowing the battery can cause severe internal burns in just 2 hours and may lead to death.
- If the battery compartment does not close securely, stop using the product and keep it away from children.
- If you think a battery may have been swallowed or placed inside any part of the body, seek immediate medical attention.

Package Contents

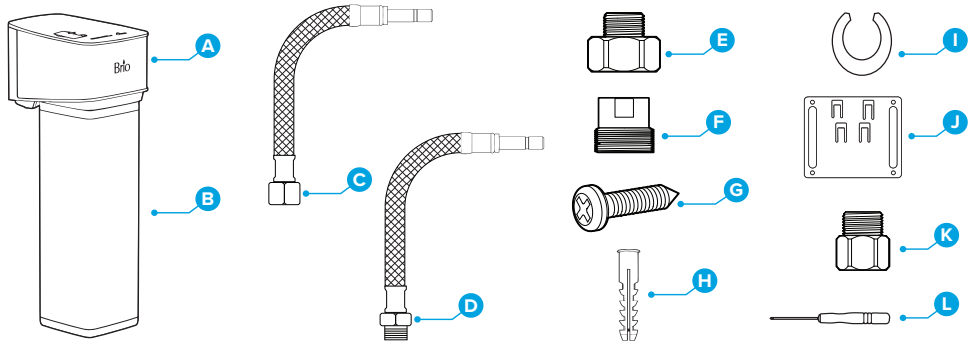

Part	Description
A	Filter head
B	Filter cartridge
C	Braided inlet hose
D	Braided outlet hose
E	3/8” Male to 1/2” female adapter
F	3/8” Female to 1/2” male adapter

Part	Description
G	Self-tapping screws (qty. 4)
H	Anchor sleeve (qty. 4)
I	C-type buckle (qty. 2)
J	Mounting bracket
K	Flow restrictor with internal green restrictor
L	Mini Phillips screwdriver

Materials Needed (Not Included)

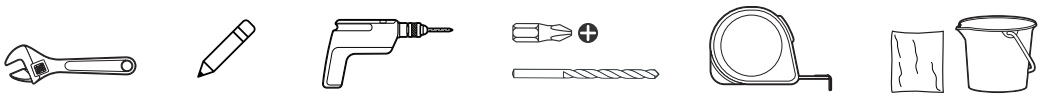

Adjustable wrench | Pencil | Power drill/driver | Phillips driver bit & ¼" drill bit | Tape measure | Towel or bucket

Operational and Technical Specifications

Operating Temperature	35–100 °F (2–38 °C)
Operating Pressure	10–100 psi (68.95–689.5 kPa)
Flow Rate at 60 psi (413.7 kPa)	0.66 gpm (2.5 L/min)
Filter Capacity	A11SS: 825 gallons (3,123 liters)
	A16SS: 1,200 gallons (4,543 liters)
	A22SS: 1,650 gallons (6,246 liters)
	A26SS: 1,950 gallons (7,382 liters)
Feedwater Requirement	Municipal tap water

Performance Data Sheet

Premium Undersink Water Filtration System

Model: FUS100A11SS, FUS100A16SS, FUS100A22SS, FUS100A26SS, FUS100F11SS, FUS100F16SS
Replacement Filters: RPFFUS100SS11, RPFFUS100SS16, RPFFUS100SS22, RPFFUS100SS26

The Premium Undersink Water Filtration System has been tested and certified by NSF International against NSF/ANSI Standards 42 and 53 for the reduction of contaminants specified on the Performance Data Sheet. The system is also certified to NSF/ANSI Standard 372 for “lead-free” compliance.

- The system has been tested according to NSF/ANSI (42/53) for reduction of substances listed below. The concentration of the indicated substances in water entering the system was reduced to the concentration less than or equal to permissible limit for water leaving the system, as specified in NSF/ANSI (42/53).
- Statement that while testing was performed under standard laboratory conditions, actual performance may vary.

Substance Reduction Aesthetic Effects	**Influent Challenge Concentration**	**Maximum Permissible Product Water Concentration**	**Average % Reduction**
Chlorine Taste/Odor	2.0 mg/L ±10%	≤0.5 mg/L	≥95%
Containment Reduction	**Influent Challenge Concentration**	**NSF Reduction Requirements**	**Average % Reduction**
Lead @ pH 6.5	150 µg/L	≤10 µg/L	≥93%
Lead @ pH 8.5	150 µg/L	≤10 µg/L	≥93%
Mercury @ pH 6.5	6 µg/L	≤ 2 µg/L	≥66%
Mercury @ pH 8.5	6 µg/L	≤ 2 µg/L	≥66%
Asbestos	10^7 fibers/L	≤10^7 fibers/L	≥99%
MTBE	15 µg/L	≤ 5 µg/L	≥67%
VOC by surrogate chloroform	300 ug/L ± 10%	2.3 ug/L	99.7%
Turbidity	11 NTU	≤0.5 NTU	≥95%
Cyst	Min 50,000/L	≤ 1/L	≥99.95%
Total PFAS	1.5 µg/L	≤ 0.07 µg/L	Meets Std

Test Parameters: pH = 7.5 ± 0.5 unless otherwise noted. Flow = 0.66 GPM. Pressure = 60 psi (413.7 KpA). Temperature = 63°F (17.2°C).

Brio

Installation

Installation Overview

Part	Description
1	Cold water supply valve
2	Faucet pipe
C	Braided inlet hose
D	Braided outlet hose

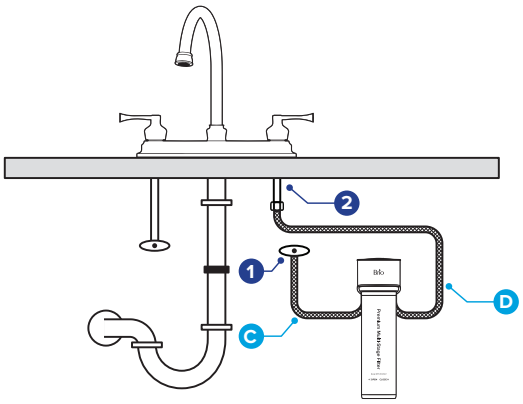

Step 1: Establish Filter Mounting Location

1. Select a location close to both the cold water supply and faucet line. When installed, filtration system hoses should have some slack and not strain to reach connections. The location should also be easily accessible and provide sufficient room for comfortable installation and filter replacements.
2. Carefully measure the wall space where you intend to mount the system. Keep in mind that when the system is fully installed, its full length includes both the filter head and filter cartridge. To accommodate future filter changes, ensure there is at least 2” of space above and below the installed filter.
3. Position the mounting bracket on the wall, ensuring it’s level and the hooks are pointing up. Use the mounting holes on the bracket as guides to mark drill holes with a pencil.

Step 2: Mount the Filter Head Bracket

1. **Mounting on wood:** Position the mounting bracket on the wall, aligning mounting holes directly over marks made for drilling. Use the power drill/driver with Phillips head driver bit to drive screws into the wall until they are flush against the mounting bracket and the bracket is securely fixed to the wall.
2. **Mounting on drywall:** Use the power drill/driver with 1/4-in. drill bit and drill holes in drywall, using drill hole marks as guides. Insert anchor sleeves into holes. Change bit in power drill/driver to Phillips head driver bit. Position the mounting bracket on the wall, aligning mounting holes directly over anchor sleeves. Drive screws into anchor sleeves until they are flush against the mounting bracket and the bracket is securely fixed to the wall.

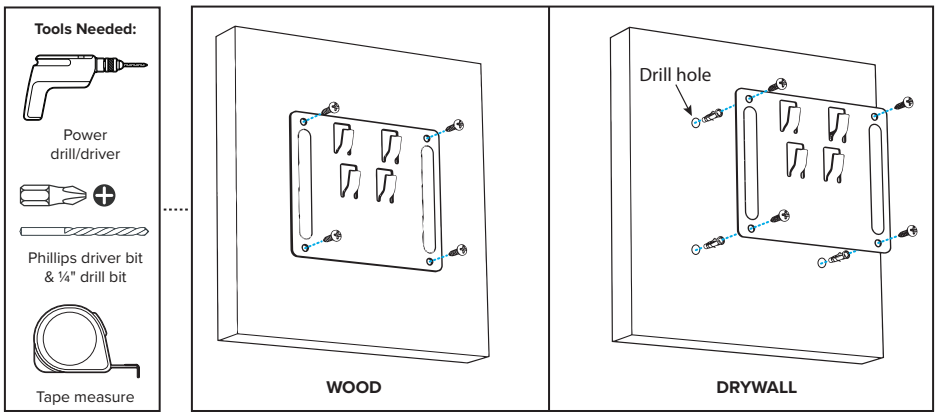

STEP 3: Connect to the Cold Water Supply

CAUTION: DO NOT CONNECT THIS WATER LINE TO A HOT WATER SUPPLY LINE. The water supply to the unit MUST be from the COLD WATER LINE. Using HOT WATER will severely damage the filters.

IMPORTANT: **Do not use plumber's tape on connections as it may cause a faulty seal and result in leakage.**

1. Turn off cold water supply (1). Open faucet and drain any remaining water in pipes.
2. With an adjustable wrench, disconnect the faucet line from the cold water supply line (2). Use a towel or bucket to catch any excess water.
3. Rotate the braided inlet hose (C) onto the cold water supply line, ensuring pre-installed rubber gasket is securely in place. Due to shipping, it can become dislodged. Tighten connection using the adjustable wrench.
   - **A.** If the cold water supply line is 1/2 in., connect the 3/8" male to 1/2" female adapter (E) to the cold water supply line first. Ensure the pre-installed rubber gasket in the adapter is securely in place.

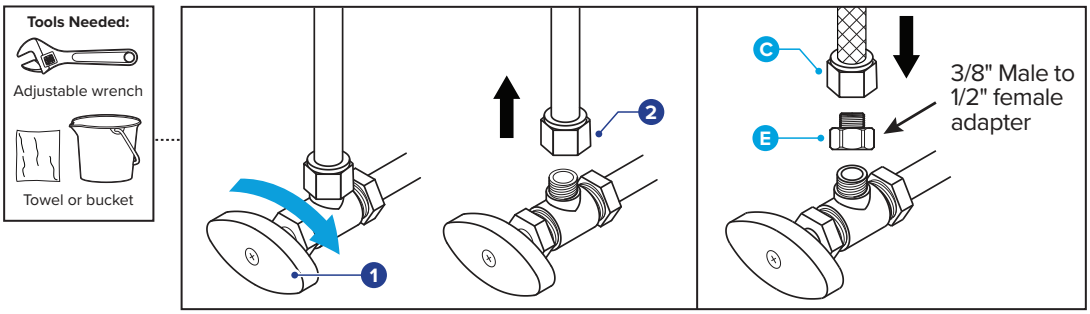

STEP 4: Connect to Faucet

1. Rotate the flow restrictor (K) onto the end of the braided outlet hose (D), then connect outlet hose to faucet line (2).
   - **A.** If the faucet line is 1/2 in., connect the the 3/8" female to 1/2" male adapter (F) to the faucet line first, ensuring pre-installed rubber gasket in adapter is in place.

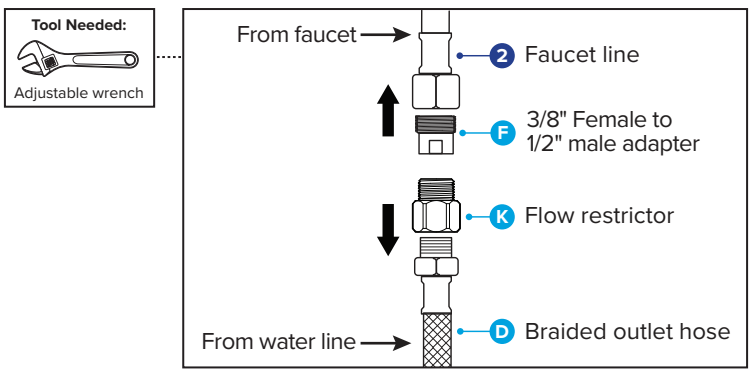

Brio

Step 5: Make the Filter Head Connections

1. Remove the safety plugs by squeezing then pulling out.
2. To activate the filter lifespan timer, pull out the tab from the cell battery compartment.
3. Insert the inlet hose (C) into the “IN” port on the filter head. Insert the outlet hose (D) into the “OUT” port on the filter head.

   NOTE: When the hoses are correctly inserted, there will be a 1/8 in. gap between the base of the hose tip and the filter head.
4. Secure hoses by sliding a C-type buckle (I) under the collar of each port.

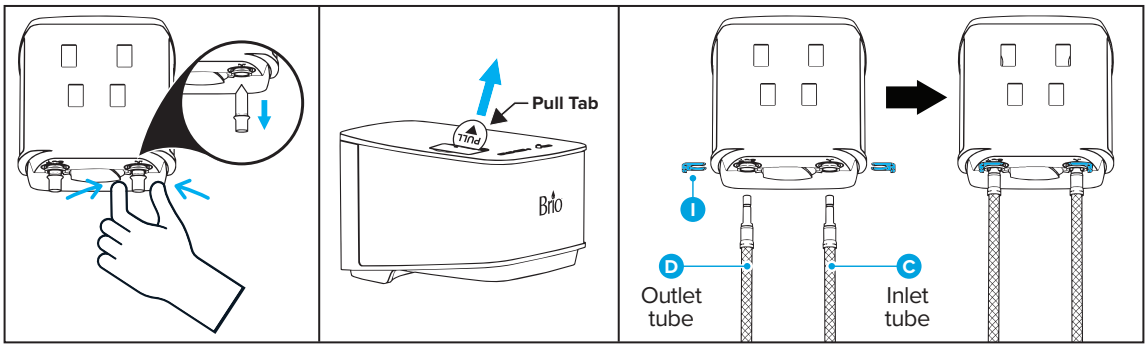

Step 6: Complete the Installation

1. First, mount the filter head (A) onto the mounting bracket (J). Then insert the filter cartridge (B) into the filter head and rotate it a quarter turn to the right until it locks into place.
2. Turn on the cold water supply, open the faucet, and flush the filter for 2 hours before use.

   NOTE: Flush until water runs clear. The filter contains activated carbon so initial flushed water is black or gray.
3. While the filter is being flushed, check for leaks in the installation area. If water leakage occurs, turn off faucet and cold water supply. Disconnect and reinstall hoses.

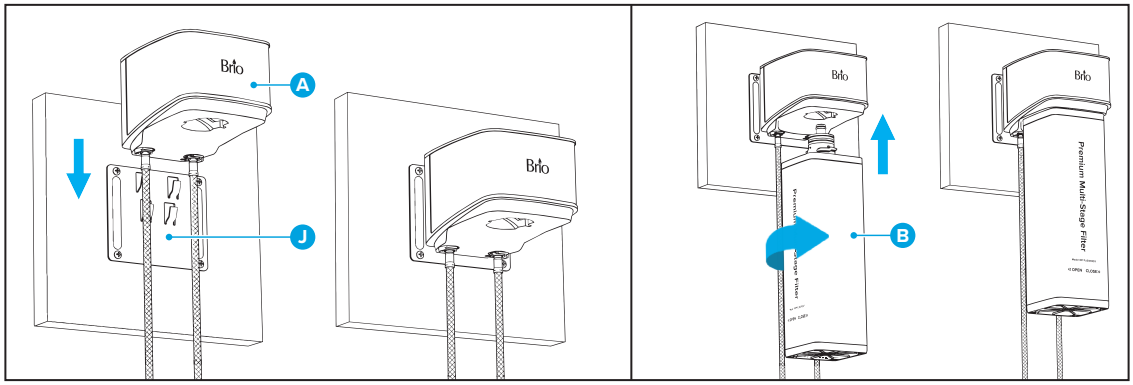

Maintenance

Supply Source for Replacement Components

Replacements for system parts, components, and filter cartridges are available for purchase on **www.briowater.com.**

Filter Replacement Schedule

Replace filter cartridge when required. Always use the same size/model as the one that came with your system. Using a different size will negatively impact system performance and water quality.

Filtration System	Replacement Filter Model No.	Replacement Schedule
FUS100A11SS	RPFFUS100SS11	Every 825 gallons (3,123 liters)
FUS100A16SS	RPFFUS100SS16	Every 1,200 gallons (4,543 liters)
FUS100A22SS	RPFFUS100SS22	Every 1,650 gallons (6,246 liters)
FUS100A26SS	RPFFUS100SS26	Every 1,950 gallons (7,382 liters)

Replace the Filter Cartridge

When the filter cartridge expires, the filter head alerts you by beeping for one minute every hour, and its LED light blinks in red.

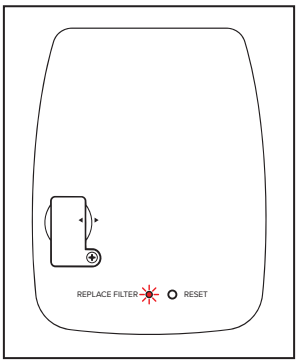

Mute the beeping by pressing the RESET button on the filter head, then replace the filter cartridge by following these steps:

1. Turn off the cold water supply and open the faucet to drain water.
2. Rotate the expired filter cartridge to the left a quarter turn and pull out.
3. Insert the new cartridge and rotate a quarter turn to the right until it locks into place.

   NOTE: Alternatively, you can lift the filtration system off the bracket, being careful not to disconnect the hoses, and rotate the filter head to remove from the expired filter cartridge. When installing the new filter, apply sufficient pressure to the filter head to lock the new filter into place.
4. Press and hold the RESET button for 3 seconds. The LED light illuminates in red and the filter head beeps for 5 seconds, indicating the filter timer reset is successful.
5. Remount the filtration system if you've removed it. Turn on the cold water supply and flush for 2 hours or until water runs clear.
6. Recycle the expired filter cartridge at a scrap metal facility or according to your local laws and regulations.

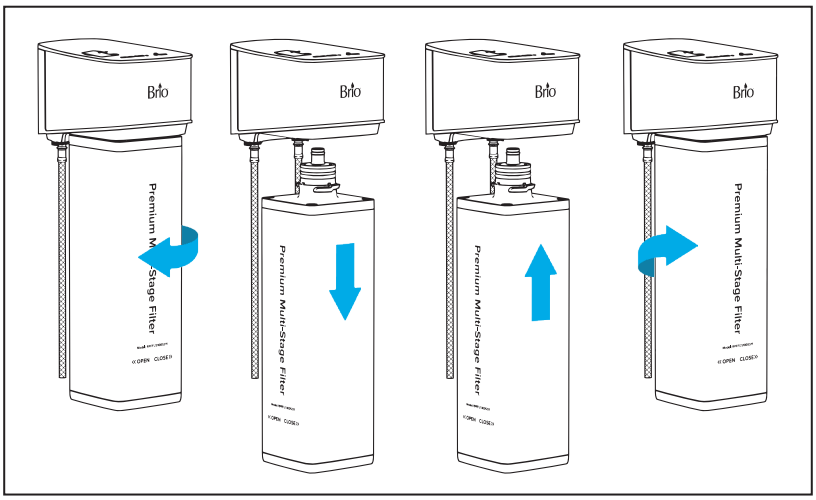

Replace the Battery

NOTE: The filter head features a pre-installed CR2477 button cell battery, which has a lifetime of 485 days. A replacement CR2477 battery must be purchased separately.

When the internal battery voltage falls below 2.5V, the filter head alerts you by beeping for one minute every hour, and its LED light blinks in yellow.

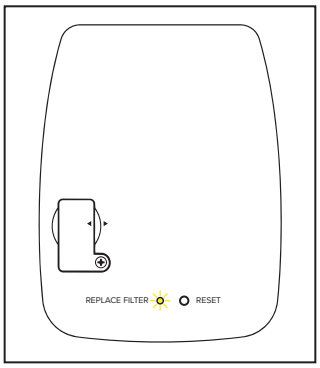

Replace the battery by following these steps:

1. Using the mini Phillips screwdriver, remove the screw on the battery compartment door on the top of the filter head. Set screw aside in a safe place.
2. Lift the battery frame out of the compartment.
3. Remove the expired battery and immediately dispose of it according to local regulations. KEEP AWAY from children and pets. DO NOT dispose of battery in household trash or incinerate.
4. Install a new battery (purchased separately) into battery frame with the positive (+) side facing outward, then insert frame into compartment and slide down into place. Immediately reinstall the screw to secure the compartment.

NOTE: When the battery voltage falls below 2.5V and the filter cartridge expires simultaneously, the filter head LED light will blink in orange. In this case, replace the battery first, followed by the filter cartridge.

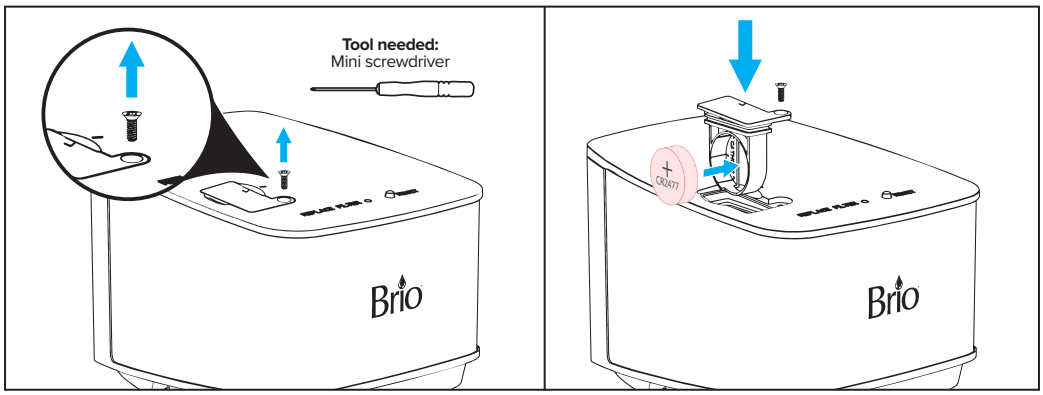

Troubleshooting

Problem	Probable Cause	Solution
The water has a black or dark appearance.	The system may not have been properly flushed.	Properly flush the system. See “Complete the Installation.”
Water flow is slow.	The water pressure is low.	Add a booster pump.
	There are crimps in the hosing.	Ensure the hosing is not twisted or impaired in any way.
	The filter is clogged.	Replace the filter. See “Replace the Filter Cartridge.”
The water smells or tastes bad.	The filter life may have expired.	Replace the filter. See “Replace the Filter Cartridge.”
There are leaks in the system.	The hoses are not secure.	Fully inserted hosing should have a 1/8-in. gap between hose and filter head. Ensure hosing is fully inserted.
	Hoses are not attached securely.	Turn off water supply. Disconnect, then reinstall hoses.
	The water pressure is too high.	Install a pressure reducing valve at the water inlet. (Not Included)

Warranty

Brio ("Vendor") warrants to the original purchaser of the Brio Water Filtration System (the "Product"), and to no other person, that if the Product is assembled and operated in accordance with the printed instructions accompanying it, then for a period of one (1) year from the date of purchase, all parts in the Product shall be free from defects in material and workmanship. This Limited Warranty shall be limited to repair or replacement of parts, which prove defective under normal use and service and which Vendor shall determine in its reasonable discretion upon examination to be defective. To take advantage of this Limited Warranty, please follow these steps:

1. Please retain your sales slip or invoice, as Vendor may require reasonable proof of your date of purchase.
2. Contact Vendor's Customer Service Department using the contact information listed below.
3. Return parts to Vendor, per Vendor's instructions, at your cost and expense.
4. Upon receipt by Vendor, Vendor shall advise you in writing whether a defect covered by this Limited Warranty exists in any returned part and whether your claim has been approved or denied.
5. Upon Vendor's approval of your claim, Vendor will replace such defective part without charge to you.

WHAT THIS LIMITED WARRANTY DOES NOT COVER: This Limited Warranty does not cover any failures or operating difficulties of the Product due to accident, abuse, misuse, alteration, misapplication, improper installation or improper maintenance or service by you or any third party, or failure to perform normal and routine maintenance on the Product, as set out in the User's Manual. In addition, this Limited Warranty does not cover damages to the finish, such as scratches, dents, discoloration or rust after purchase.

This Limited Warranty is the only express warranty given on the Product and is in lieu of all other express warranties. Vendor disclaims all warranties for products that are purchased from seller other than authorized retailers or distributors. THIS LIMITED WARRANTY RESTRICTS THE DURATION OF ANY AND ALL IMPLIED WARRANTIES, INCLUDING WITHOUT LIMITATION, THE IMPLIED WARRANTY OF MERCHANTABILITY AND FITNESS FOR A PARTICULAR PURPOSE TO THE ONE (1) YEAR TERM OF THIS LIMITED WARRANTY. UPON THE EXPIRATION OF THE ONE (1) YEAR TERM OF THIS LIMITED WARRANTY, VENDOR DISCLAIMS ANY AND ALL IMPLIED WARRANTIES, INCLUDING WITHOUT LIMITATION THE IMPLIED WARRANTIES OF MERCHANTABILITY AND FITNESS FOR A PARTICULAR PURPOSE, THE PRODUCT BEING THUS SOLD AS-IS, WITH ALL FAULTS. FURTHER, VENDOR SHALL HAVE NO LIABILITY WHATSOEVER TO PURCHASER OR ANY THIRD PARTY FOR ANY SPECIAL, INDIRECT, PUNITIVE, INCIDENTAL, OR CONSEQUENTIAL DAMAGES. OTHER THAN THIS LIMITED WARRANTY, THERE ARE NO WARRANTIES WHICH EXTEND BEYOND THE DESCRIPTION ON THE FACE HEREOF. Vendor assumes no responsibility for any defects caused by third parties. This Limited Warranty gives you specific legal rights, and you may have other rights which vary from state to state. State law may also override statements in this Limited Warranty regarding the restriction on the duration of implied warranties. Some jurisdictions do not allow exclusion or limitation of special, incidental or consequential damages, or limitations on how long a warranty lasts, so the above exclusion and limitations may not apply to you.

Brio Water Technology, Inc.
768 Turnbull Canyon Rd.
City of Industry, CA 91745
www.briowater.com

Brio®

WWW.BRIOWATER.COM

©2026 Brio Water Technology, Inc.