Parts Manual

Mfg. No: 6271200x85

18-2830-28 Sno Blizzard Dual Stage Snowthrower (2007)

Copyright © Briggs & Stratton. All Rights reserved

Model Components

Page

Auger Housing. 4
Chute Guard. 6
Chute Rod. 8
Control Panel. 10
Decals. 12
Discharge Chute. 14
Drive. 16
Engine. 18
Frame. 20
Gear Case. 22
Handle Assembly. 24
Shift Yoke. 26
Wheels. 28
Torque Specification Chart. 30

Not For Reproduction

Copyright © Briggs & Stratton. All Rights reserved

Auger Housing

Note: Unless noted otherwise, use the standard torque specifications

Mfg. No: 6271200x85

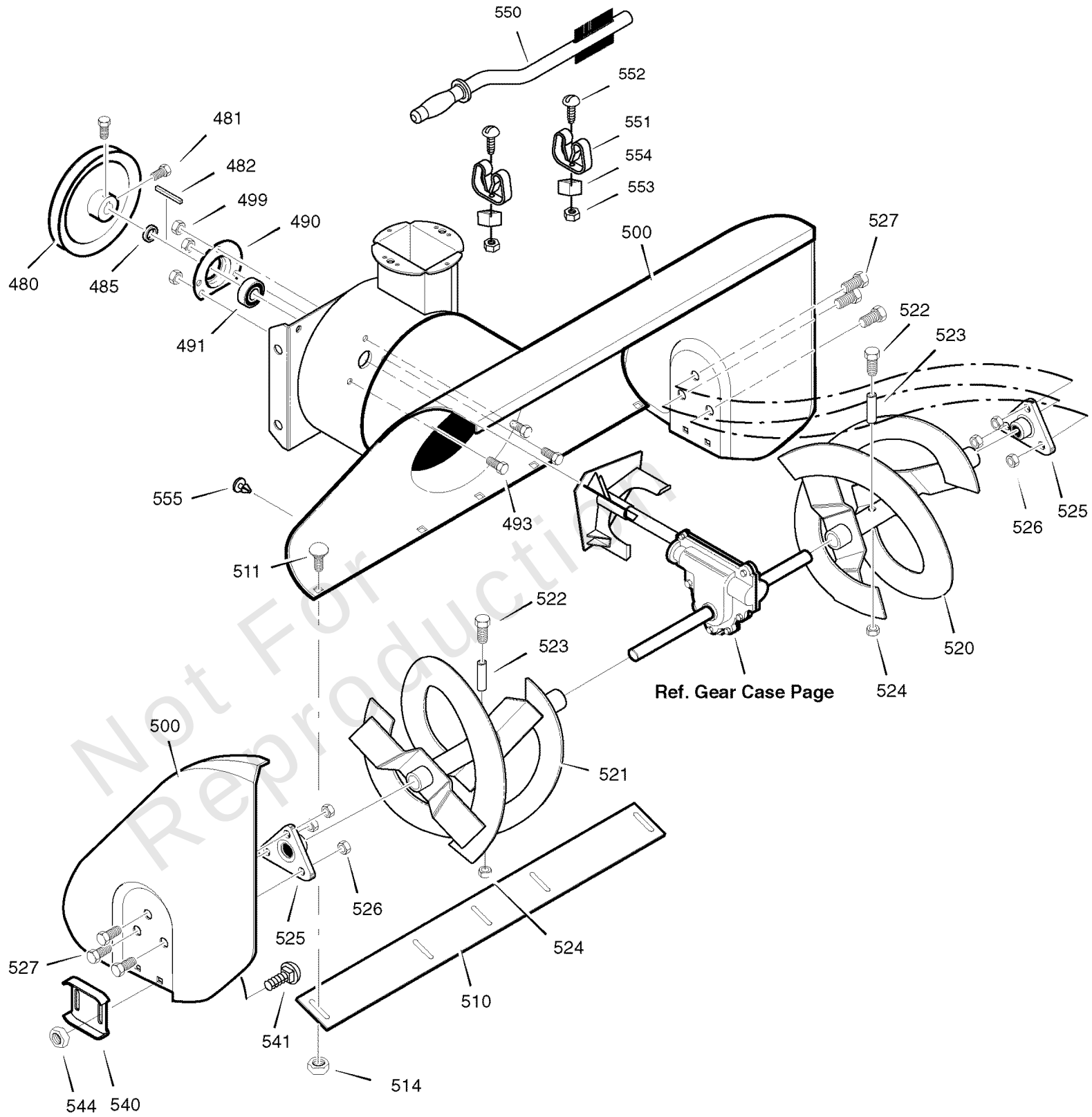

Not For Reproduction

Copyright © Briggs & Stratton. All Rights reserved

Auger Housing

REF NO	PART NO	QTY	DESCRIPTION
480	1501211MA		PULLEY, 8.40 V4L .67id
481	577400MA		SCREW, 5/16-18X.63 HH
482	2001022MA		KEY,SQUARE 3/16 X 3/4
485	1501158MA		SPACER,FRICTION PULLE
490	582957YZMA		RETAINER, BALL BEARING
491	1501389MA		BEARING, BALL
493	001X45MA		BOLT, HEX 5/16-18 X 0.62
499	710026MA		NUT, 5/16-18 HEXWDFLLK
500	1502013E012MA		HOUSING, ASSEMBLY
510	760661E701MA		BLADE, SCRAPER
511	340720MA		BOLT, 5/16-18 X 3/4
514	710026MA		NUT, 5/16-18 X 0.62
520	1501669E701MA		AUGER ASSEMBLY, LH
521	1501668E701MA		AUGER ASSEMBLY, RH
522	9524MA		SCREW, 1/4-20 X 1.75
523	3943MA		SPACER, SLEEVE
524	73826MA		NUT, 1/4-20
525	9517MA		BEARING AUGER BLACK
526	711862MA		NUT, 5/16-18
527	9357MA		SCREW, 5/16-18X .75WD
540	309016E701MA		SKID,HGT ADJ S2 HT
541	908156MA		BOLT, 5/16-18 X 0.5
544	710026MA		NUT, 5/16-18
550	1501576MA		BRUSH, CLEANOUT
551	1501672MA		CLIP,RETAINER YZ
552	06X115MA		SCREW
553	15X146MA		NUT
554	578063MA		BLOCK,UNIVERSAL PIVOT
555	760040MA		PLUG

Not For Reproduction

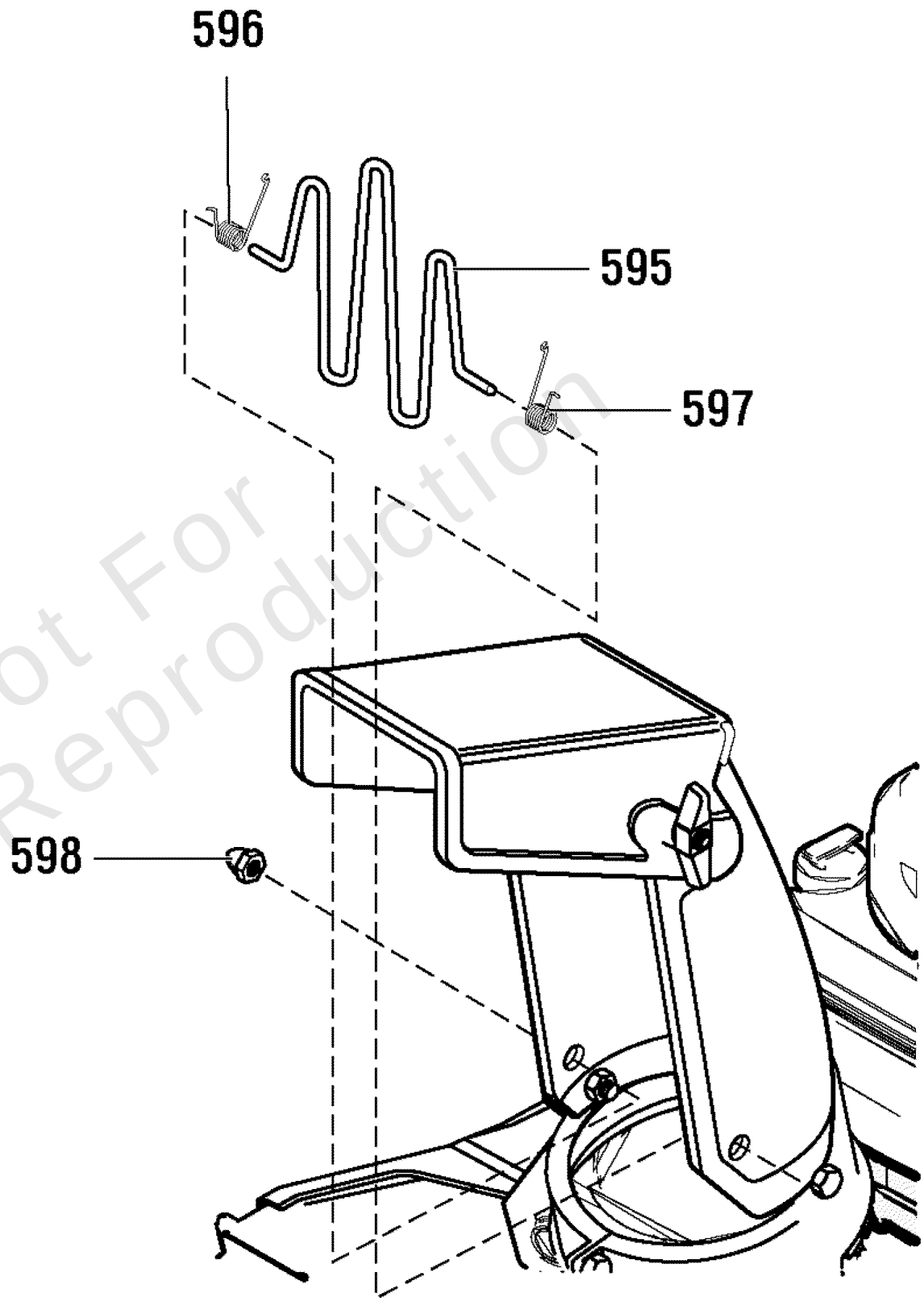

Not For Reproduction

Chute Guard

REF NO	PART NO	QTY	DESCRIPTION
595	311206MA		GUARD, WIRE CHUTE
596	51776MA		SPRING, TORSION
597	51777MA		SPRING, TORSION
598	49106MA		NUT, ACORN

Not For Reproduction

Copyright © Briggs & Stratton. All Rights reserved

Chute Rod

Note: Unless noted otherwise, use the standard torque specifications

Mfg. No: 6271200x85

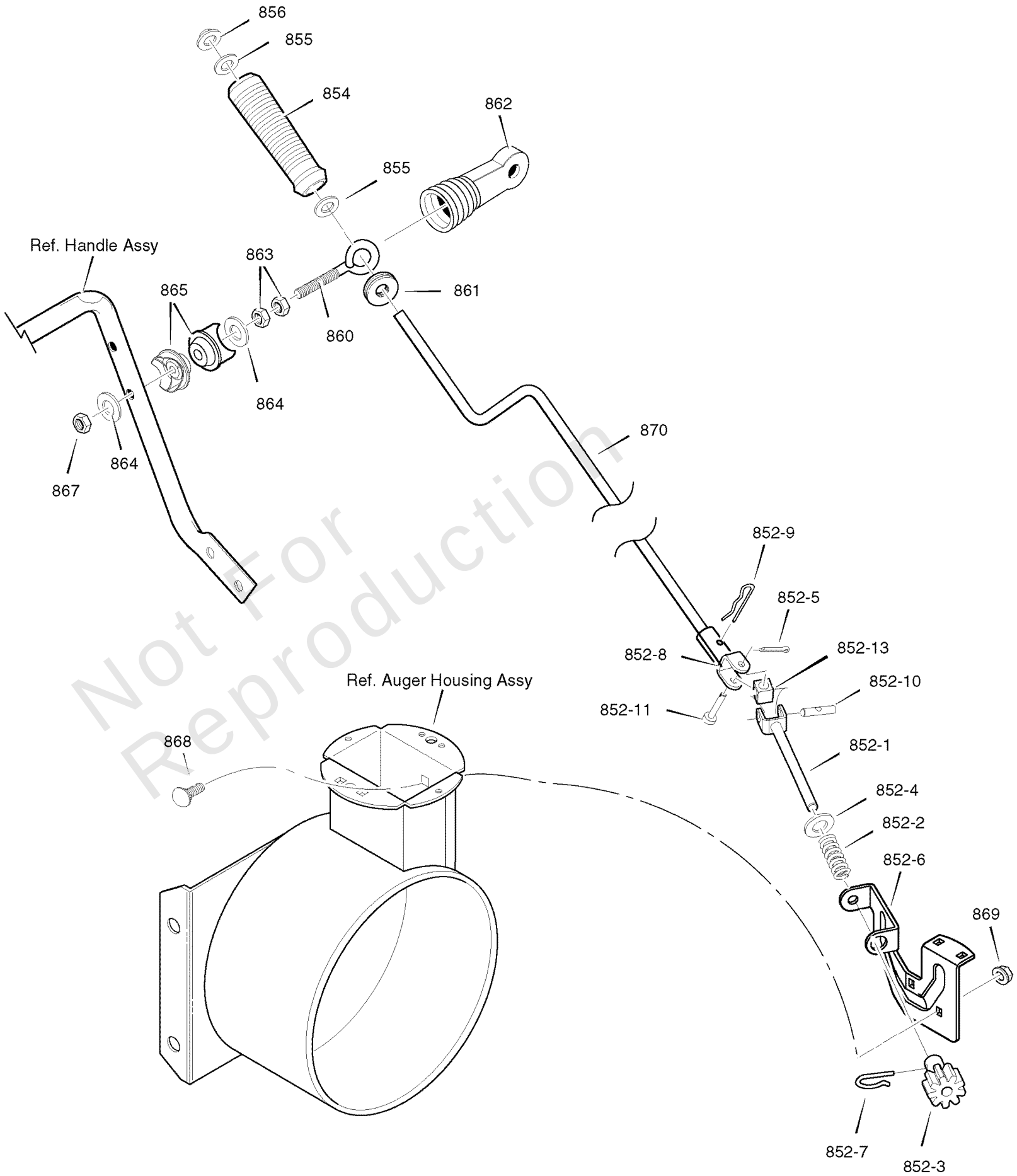

Not For Reproduction

Copyright © Briggs & Stratton. All Rights reserved

Chute Rod

REF NO	PART NO	QTY	DESCRIPTION
852-1	1501533YZMA		ROD 4.72YOKE ASY,CRAN
852-2	164X37MA		SPRING, COMPRESSION
852-3	1501067MA		GEAR,9 TOOTH 8DP
852-4	017X48MA		WASHER, 39.75 13G FLT
852-5	579493MA		PIN, COTTER .06X .50
852-6	1501306E701MA		BRKT,CHUTE GEAR
852-7	1501293MA		PIN-HAIR, CHUTE GEAR
852-8	1501075YZMA		YOKE ADAPTER ASY
852-9	711682MA		PIN, HAIR
852-10	578060MA		PIN,UNIV JOINT 3/8X1.
852-11	578309MA		LF PIN, CLEVIS .25DX
852-13	578063MA		BLOCK,UNIVERSAL PIVOT
854	307399MA		KNOB, SLEEVE
855	309312MA		WASHER, FLAT .39 X .7
856	73664MA		NUT, PUSH ON 3/8"
860	1501456MA		EYEBOLT.38-16X6.50 .6
861	148MA		GROMMET, Eyelet
862	1501457MA		BOOT, Eye Bolt
863	71045MA		NUT 3/8-16 HEX JAM
864	71072MA		WASHER, FLAT .406X.81
865	309344MA		ADAPTER, BOOT
867	71046MA		NUT, 3/8-16 HEXNYL
868	02X101MA		BOLT, CARRIAGE 0.25-20 x 0.75
869	15X145MA		NUT, 0.25-20
870	1501074YZMA		CRANK, ASSEMBLY CHUTE

Not For Reproduction

Copyright © Briggs & Stratton. All Rights reserved

Note: Unless noted otherwise, use the standard torque specifications

Mfg. No: 6271200x85

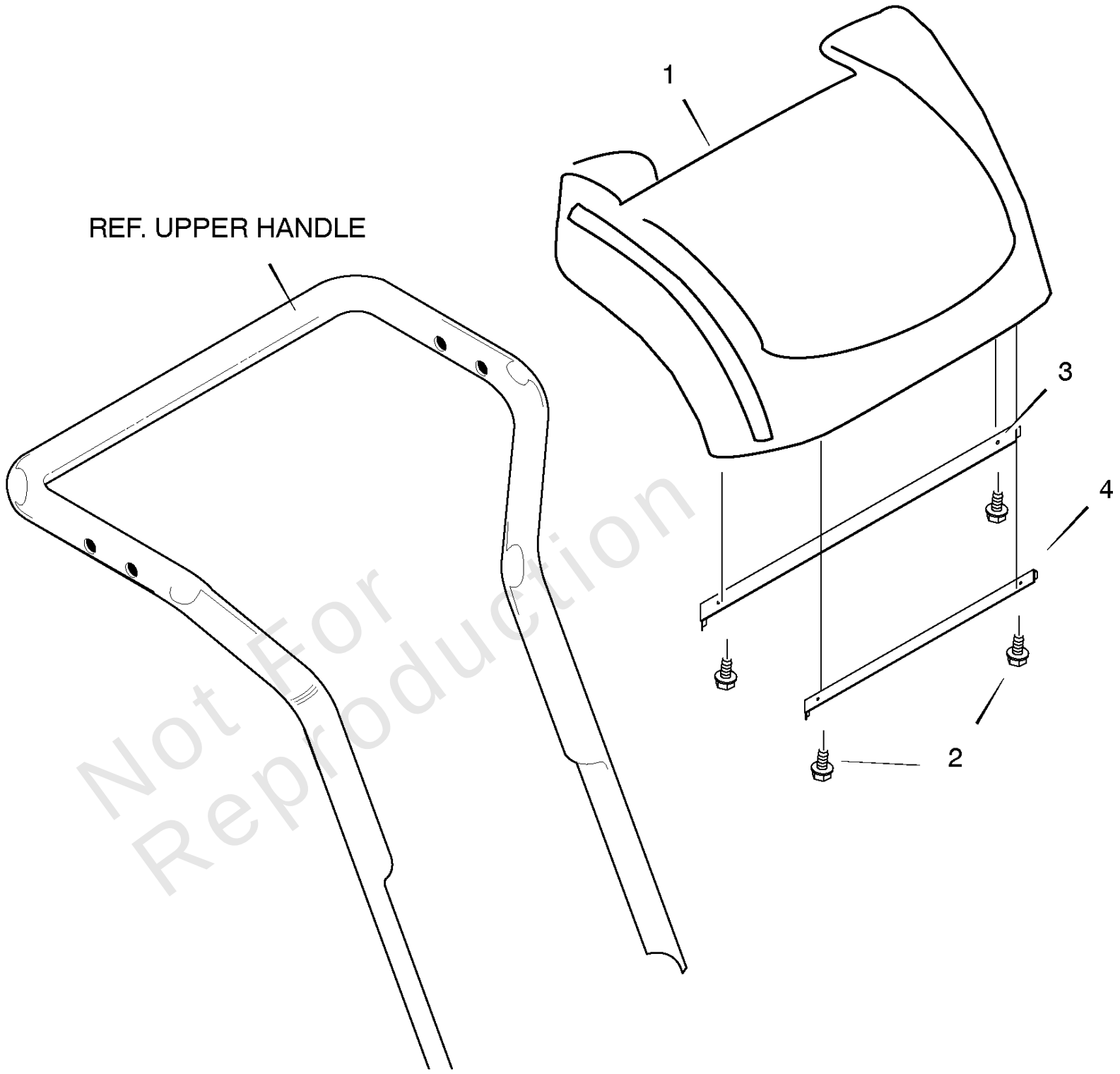

Not For Reproduction

Copyright © Briggs & Stratton. All Rights reserved

Control Panel

REF NO	PART NO	QTY	DESCRIPTION
1	1501650MA		PANEL, CONSOLE
2	316042MA		SCREW, 10X.62 UNSL-HW
3	1501649E701MA		BRACKET, HANDLE COVER -TOP
4	1501648E701MA		BRACKET, HANDLE COVER -BOTTOM

Not For Reproduction

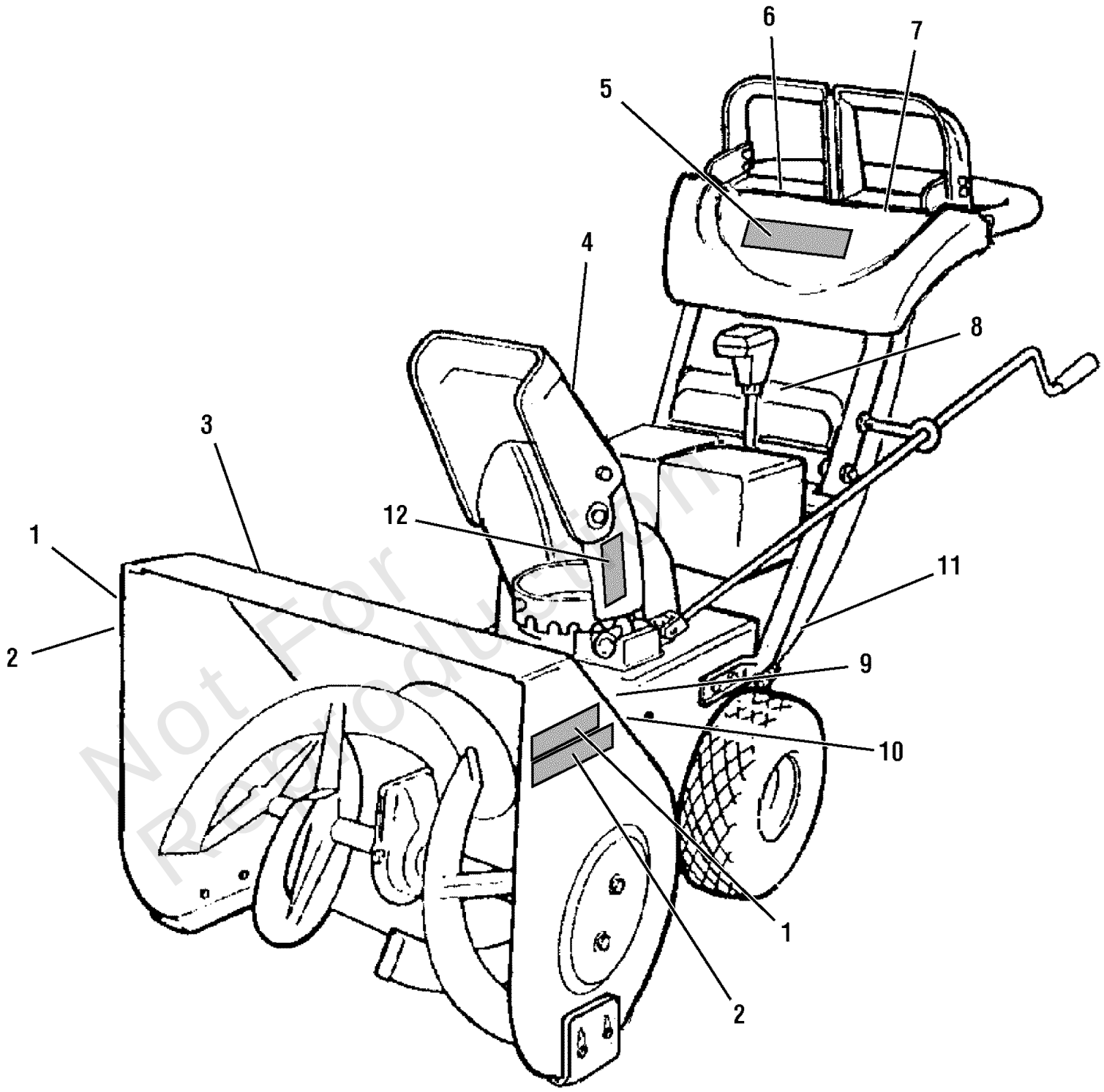

Not For Reproduction

Decals

REF NO	PART NO	QTY	DESCRIPTION
1	48X5264MA		DECAL, STIGA RH & LH AUGER
2	48X5275MA		DECAL, SNOW BLIZZARD RH & LH AUGER
3	586342MA		DECAL, ISO AUGER CE
4	586341MA		DECAL, ISO CHUTE CE
5	48X5274MA		DECAL, SNOW BLIZZARD CONTROL PANEL
6	48X5283MA		DEC-AUGER DR SYMBOL C
7	586402MA		DEC-TRACTION CTRL CF
8	48X323MA		DECAL, GEAR STRIP STIGA
9	48X5386MA		DECAL, 104DB CE
10	304427MA		DECAL, FACE HEAD PHONES
11	-----		ID PLATE *
12	48X5266MA		DECAL, DUO LINE RH CHUTE

Not For Reproduction

Footnotes:

Note* Not a serviceable part.

Copyright © Briggs & Stratton. All Rights reserved

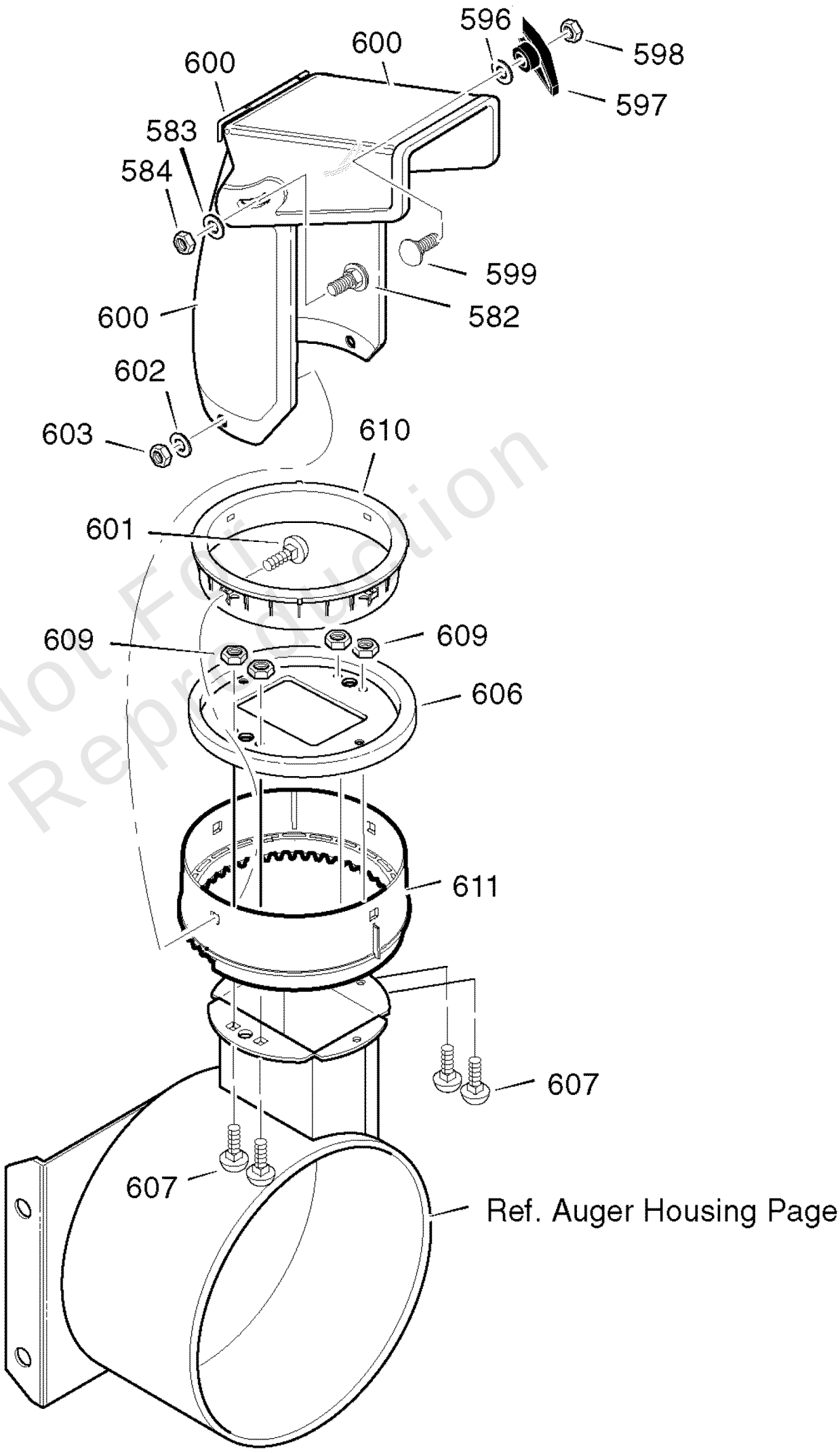

Not For Reproduction

Discharge Chute

REF NO	PART NO	QTY	DESCRIPTION
582	2X100MA		SCREW, 5/16-18 x 1.00
583	71071MA		WASHER, FLAT
584	71038MA		NUT, 5/16-18
596	71071MA		WASHER
597	57171MA		KNOB, T 3.00
598	15X144MA		NUT, 5/16-18
599	002X97MA		BOLT, 5/16-18 X 1.5
600	1501884E701MA		CHUTE ASSEMBLY
601	2X100MA		BOLT, 5/16-18 X 1.5
602	71071MA		WASHER, FLAT
603	71038MA		NUT, 5/16-18
606	1501932YZMA		CHUTE COLLAR
607	02X101MA		SCREW, 1/4-20 X 0.75
609	15X145MA		NUT, 1/4-20 HEX NYLOCK
610	337227MA		RETAINER, RING INNER
611	1501282MA		RING,OUTER CHUTE

Not For Reproduction

Copyright © Briggs & Stratton. All Rights reserved

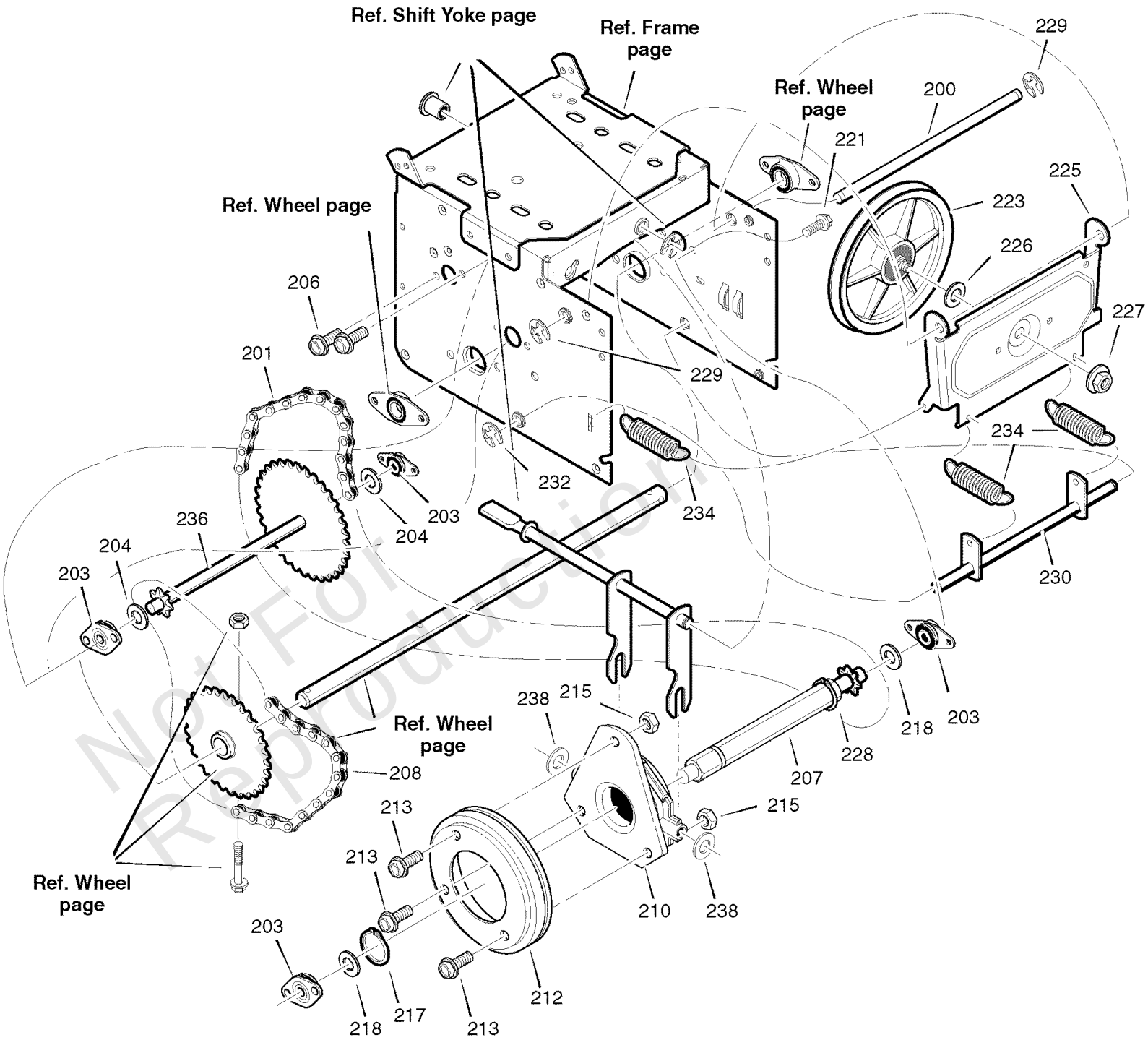

Not For Reproduction

Drive

REF NO	PART NO	QTY	DESCRIPTION
200	1501092YZMA		AXLE,SWING PLATE
201	579851MA		CHAIN, ROLLER 420X19.
203	334163MA		RETAINER & BUSHING ASSEMBLY
204	579858MA		WASHER.502-0.75-.06 F
206	25X020MA		SCREW.31-18X0.50 WAHH
207	1501236MA		HEX SHAFT ASSEMBLY
208	579868MA		CHAIN,ROLLER 420X18.0
210	337029MA		BEARING, TRUNION CLUTCH R
212	1501435MA		WHEEL,FRICTION 4.3 RU
213	001X38MA		BOLT
215	303008MA		NUT, KEPS HEX 1/4-20
217	579859MA		RING,RETEXT .54X.03TR
218	579858MA		WASHER.502-0.75-.06 F
221	25X020MA		SCREW.31-18X0.50 WAHH
223	1501115MA		PULLEY, FRICTION
225	1501057YZMA		PLATE, SWINGING YZ
226	1501158MA		SPACER,FRICTION PULLE
227	15X114MA		NUT, FLANGE LOCK 3/8-
228	0011X2MA		RING, SNAP 1/2
229	11X30MA		RETAINER, RING 7/16 Y
230	1502105YZMA		SPRING LINK ASY STD
232	11X30MA		RETAINER, RING 7/16 Y
234	165X112MA		SPRING, EXTENSION
236	1501237MA		SPROCKET INTERMED 33T/7
238	71074MA		WASHER, FLAT .53X1.00

Not For Reproduction

Copyright © Briggs & Stratton. All Rights reserved

Note: Unless noted otherwise, use the standard torque specifications

Mfg. No: 6271200x85

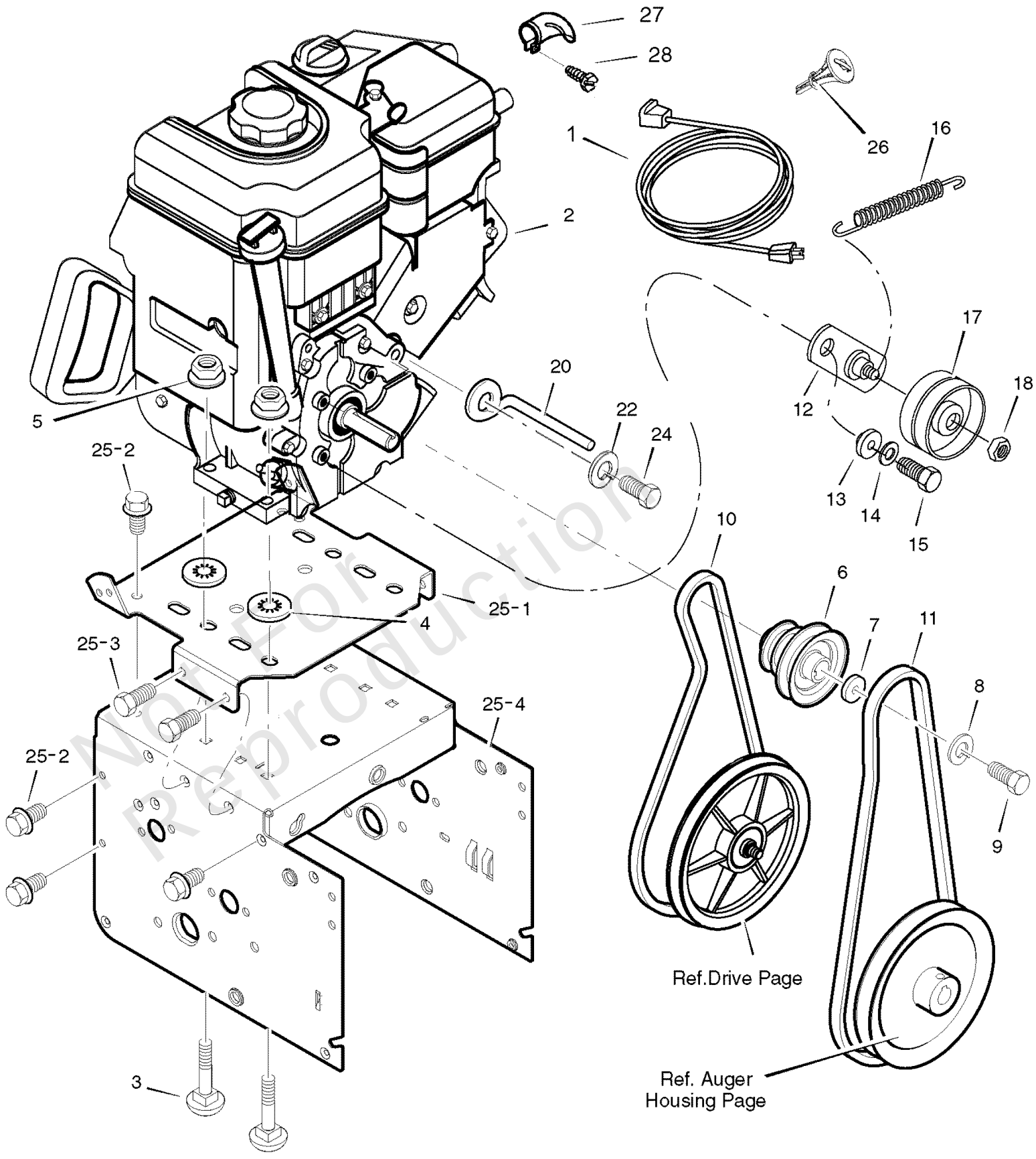

Not For Reproduction

Copyright © Briggs & Stratton. All Rights reserved

Engine

REF NO	PART NO	QTY	DESCRIPTION
1	761332MA		CORD, STARTER
2	-----		ENGINE
3	002X97MA		BOLT, CARRIAGE
4	028X76MA		NUT,SPEED
5	710026MA		NUT
6	1501109MA		PULLEY, ENGINE
7	17X146MA		WASHER
8	71060MA		WASHER
9	910828MA		SCREW
10	579932MA		BELT, DRIVE V 4L
11	585416MA		BELT
12	1501112YZMA		BRACKET ASSEMBLY, IDLER
13	1501065MA		BUSHING,IDLER BRKT
14	71060MA		WASHER, SPLIT
15	710097MA		SCREW, 5/16-24X .75
16	53704MA		SPRING, IDLER TRACTIO
17	1502120MA		PULLEY, IDLER
18	590MA		NUT, JAM 3/8-16
20	1501201MA		GUIDE, ROD BELT
22	71060MA		WASHER
24	710097MA		SCREW, 5/16-24X .75
25	-----		FRAME ASSEMBLY
25-1	1501062E012MA		PLATE, ENGINE
25-2	310169MA		SCREW, 1/4-20X .63 WA
25-3	25X020MA		SCREW.31-18X0.50 WAHH
25-4	1501050E012MA		MOTOR BOX
26	695756		KEY, BRIGGS ENGINE
27	697816		DEFLECTOR, Muffler
28	793369		SCREW
--	1741311		OWNER’S MANUAL

Not For Reproduction

Copyright © Briggs & Stratton. All Rights reserved

Note: Unless noted otherwise, use the standard torque specifications

Mfg. No: 6271200x85

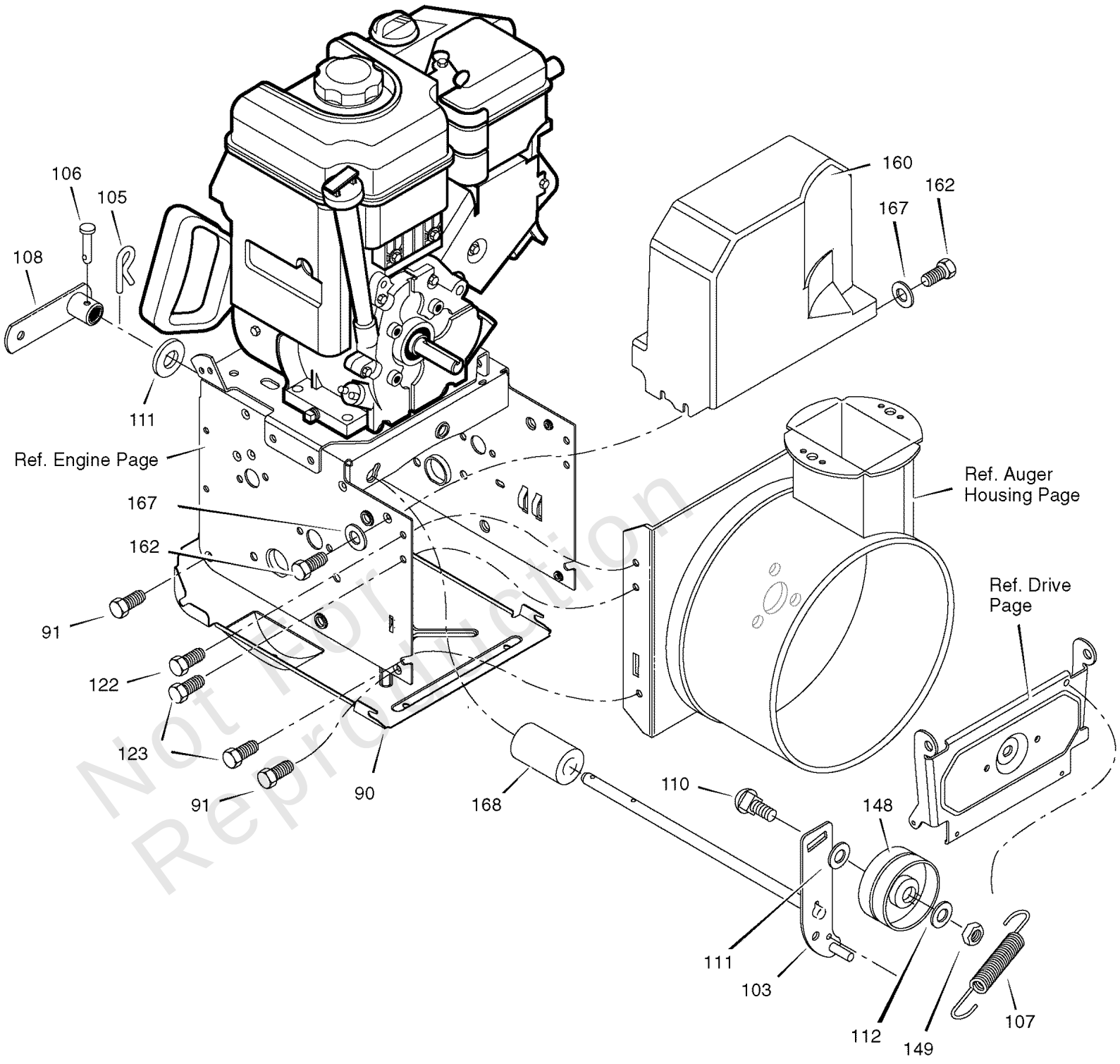

Not for Reproduction

Copyright © Briggs & Stratton. All Rights reserved

Frame

REF NO	PART NO	QTY	DESCRIPTION
90	1501055E701MA		PANEL,BOTTOM
91	310169MA		SCREW, 1/4-20X .63 WA
103	1501226YZMA		IDLER,AUG ML-STD HDL
105	711682MA		PIN, HAIR .38 DIAMETER X 1.64LG
106	761761MA		PIN, CLEVIS 3/16" DIA
107	165X159MA		SPRING, TENSION
108	1733451SM		SPRING ATTACH ASSEMBLY
110	585781MA		BOLT, 3/8 - 16 X 1.25 CARRIAGE
111	711617MA		WASHER.540-0.81-.06 F
112	017X48MA		WASHER, FLAT
122	25X020MA		SCREW.31-18X0.50 WAHH
123	25X021MA		SCREW, TAP 5/16-18 X .75
148	1502120MA		PULLEY, IDLER
149	590MA		NUT, JAM 3/8-16
160	1502169MA		COVER, BELT
162	26X306MA		SCREW, TAP
167	71067MA		WASHER, FLAT
168	1502041MA		SPACER, AUGER BRACKET

Not For Reproduction

Copyright © Briggs & Stratton. All Rights reserved

Gear Case

Note: Unless noted otherwise, use the standard torque specifications

Mfg. No: 6271200x85

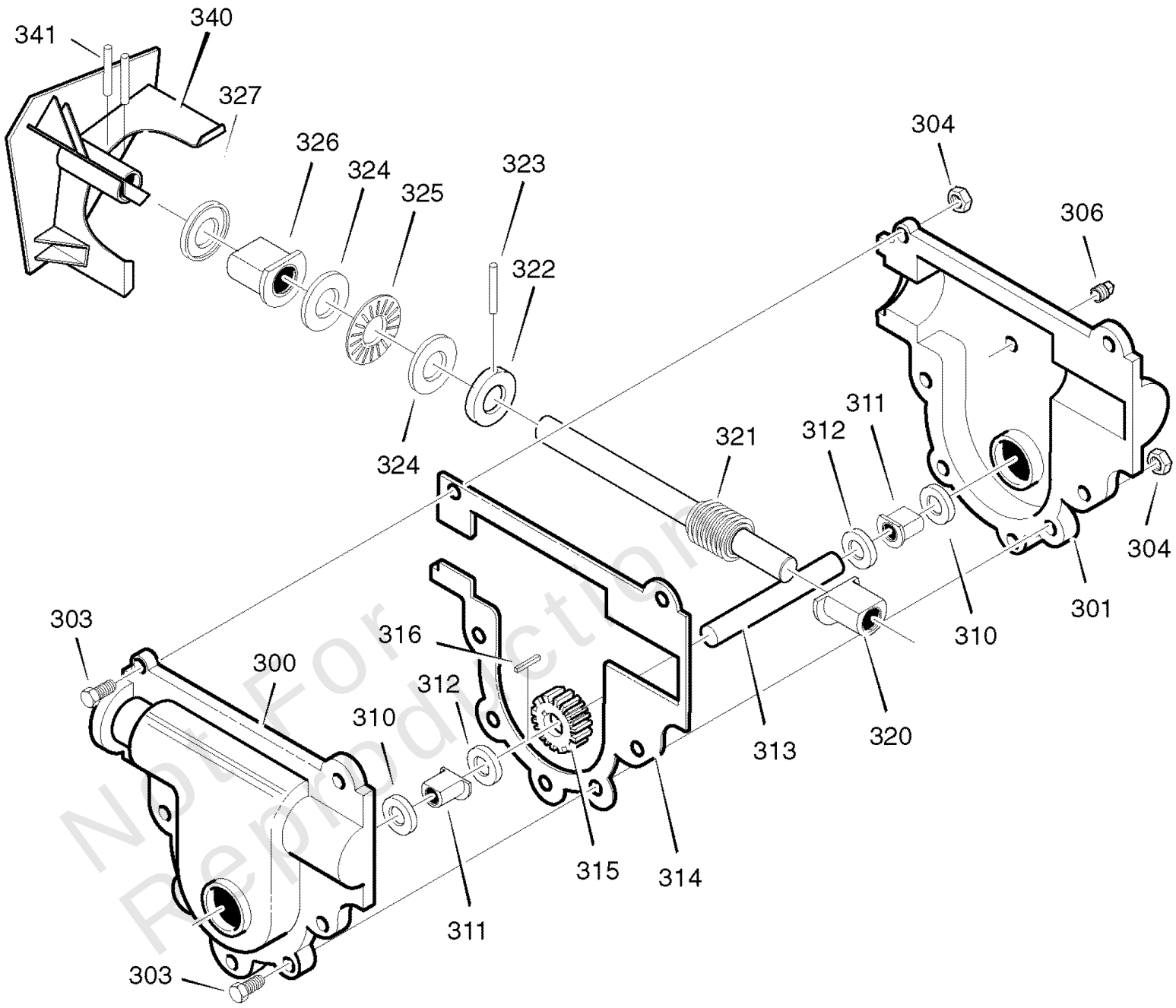

Not For Reproduction

Copyright © Briggs & Stratton. All Rights reserved

Gear Case

REF NO	PART NO	QTY	DESCRIPTION
300	10577MA		CASE, GEAR, RH
301	10576MA		CASE, GEAR, LH
303	710025MA		SCREW,1/4-20X.75
304	15X143MA		NUT,25-20 HEX FLG CTR
306	9344MA		SCREW
310	9566MA		SEAL, OIL, .75 X 1.19
311	50304MA		BRNG, FL .752IDX1.002
312	48275MA		WASHER, FLAT .752X1.
313	1501307MA		SHAFT, OUTPUT
314	51279MA		GASKET
315	51405MA		GEAR,WORM
316	431787MA		KEY, WOODRUFF
320	50221MA		BRNG,FLNG.502IDX0.752
321	1501191MA		SHAFT, INPUT
322	580295MA		COLLAR,THRUST.753X1.2
323	454565MA		PIN, SPRING.250DIAX1.
324	48275MA		WASHER, FLAT .752X1.
325	50684MA		BEARING, ROLL
326	50304MA		BRNG, FL .752IDX1.002
327	9566MA		SEAL, OIL, .75 X 1.19
340	1501188E701MA		IMPELLER ASSEMBLY
341	454565MA		PIN, SPRING.250DIAX1.
--	333431MA		LUBRIPLATE, GR132, 14oz -(Not Illustrated)

Not For Reproduction

Copyright © Briggs & Stratton. All Rights reserved

Handle Assembly

Note: Unless noted otherwise, use the standard torque specifications

Mfg. No: 6271200x85

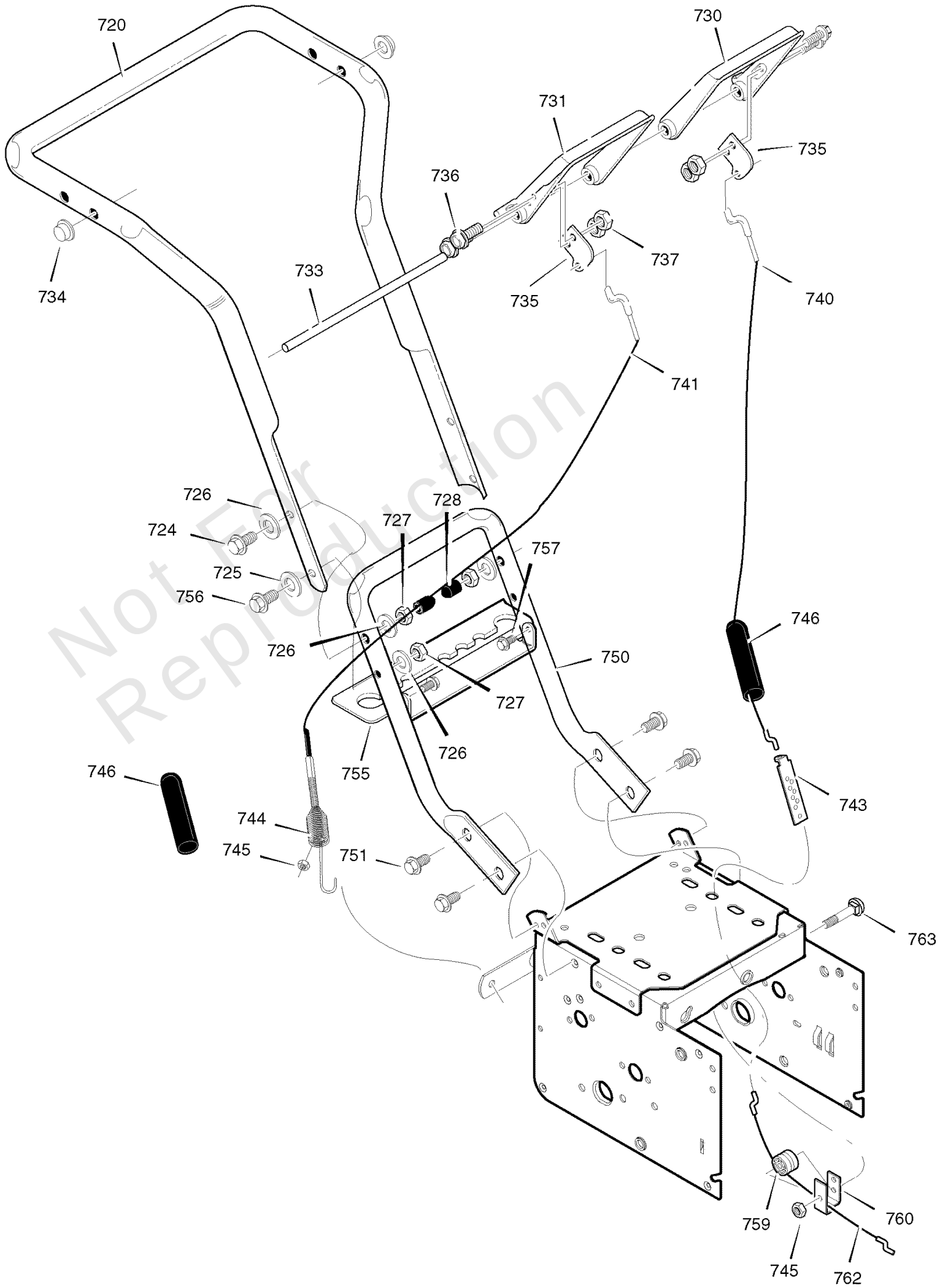

Not For Reproduction

Copyright © Briggs & Stratton. All Rights reserved

Handle Assembly

REF NO	PART NO	QTY	DESCRIPTION
720	321835E701MA		HNDL,UPR P1/P2 LT HOL
724	11234MA		SCREW
725	71071MA		WASHER, FLAT
726	71060MA		WASHER
727	15X144MA		NUT
728	11261MA		STOP, PLASTIC
730	302557MA		LEVER,CTRL P1 LH BLK
731	302558MA		LEVER,CTRL P1 RH BLK
733	12621YZMA		ROD,PIVOT P1 HANDLE
734	3535MA		NUT, PUSH ON CAP .312
735	1502080E701MA		PLATE, CABLE PIVOT
736	303108MA		SCREW.25-20X0.88 HHC
737	73826MA		NUT
740	1501123MA		CABLE,FR-DR P1,P2,P3,
741	761872MA		CABLE, AUGER CLUTCH
743	313441MA		BRACKET, CABLE ADJ BL
744	1673MA		SPRING, AUGER CLUTCH,
745	15X145MA		LOCKNUT
746	308146MA		BOOT, CLUTCH SPRING
750	339541E701MA		HANDLE, LOWER
751	25X021MA		SCREW, 0.31-18 X 0.75
752	71060MA		WASHER
755	337407E701MA		BRKT,GEAR SELECT P123
756	6751MA		SCREW, .31-18 X 2.00
757	310169MA		SCREW, 1/4-20X .63 WA
759	579860MA		SPOOL, CABLE AUGER CLUTCH
760	1501059YZMA		BRACKET, CABLE SPOOL YZ
762	1501122MA		CABLE, LOWER DRIVE 12"
763	001798MA		BOLT, HEX 1/4-20 X 1.50 YZ

Not For Reproduction

Copyright © Briggs & Stratton. All Rights reserved

Shift Yoke

Note: Unless noted otherwise, use the standard torque specifications

Mfg. No: 6271200x85

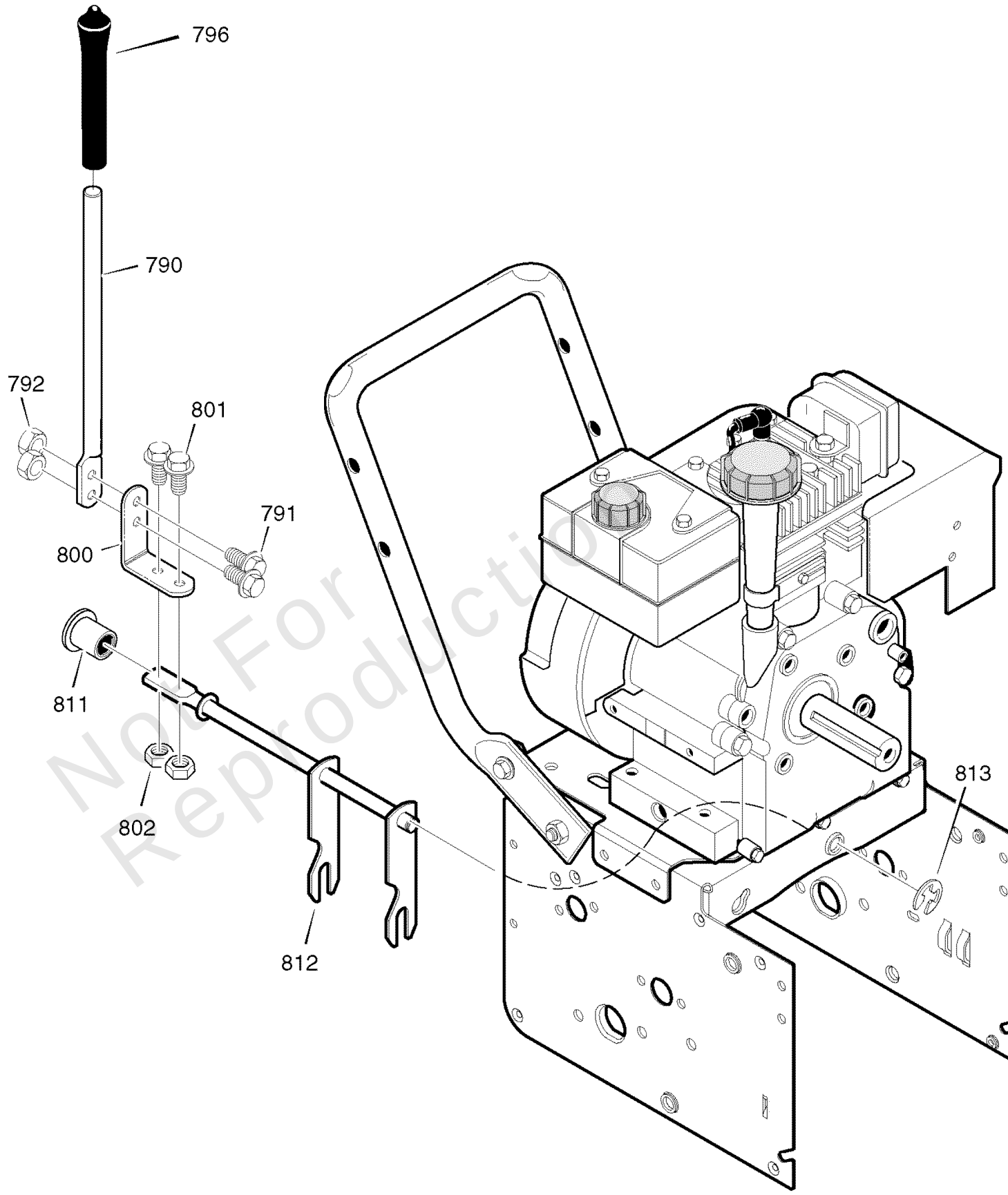

Not For Reproduction

Copyright © Briggs & Stratton. All Rights reserved

Shift Yoke

REF NO	PART NO	QTY	DESCRIPTION
790	336702E701MA		ROD,SHIFT P1P2P3H .44
791	302628MA		SCREW, 1/4-20X .75 HH
792	73826MA		NUT, 1/4-20
796	331624MA		KNOB, SLIP PLASTISOL
800	760564MA		LEVER,SPRING SHIFT
801	302628MA		SCREW, 1/4-20X .75 HH
802	73826MA		NUT, 1/4-20
811	579944MA		BRNG FL .500ID X .88
812	1501085YZMA		SPEED SELECT ASY
813	11X30MA		RETAINER, RING 7/16 Y

Not For Reproduction

Copyright © Briggs & Stratton. All Rights reserved

Note: Unless noted otherwise, use the standard torque specifications

Mfg. No: 6271200x85

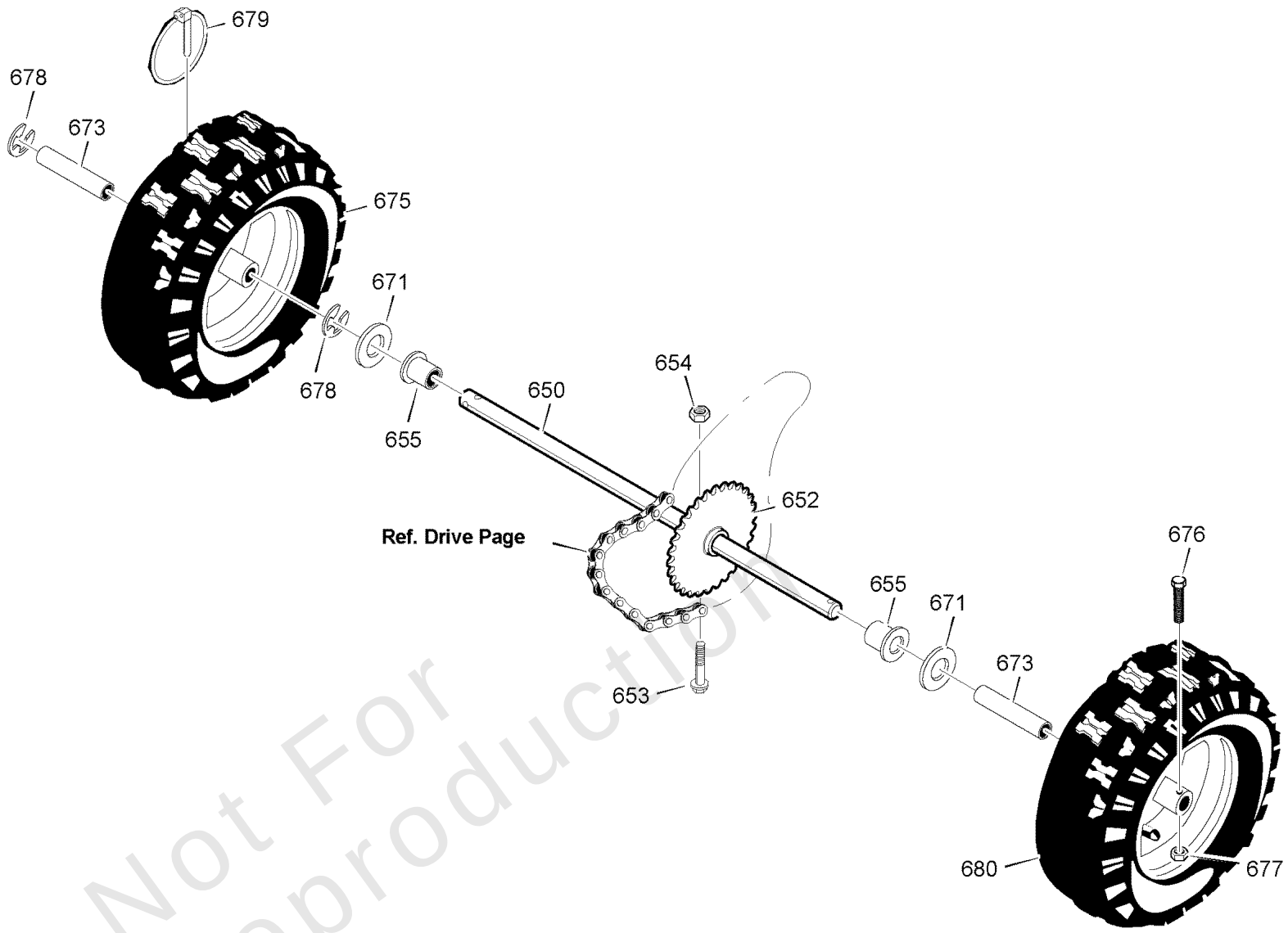

Not For Reproduction

Copyright © Briggs & Stratton. All Rights reserved

Wheels

REF NO	PART NO	QTY	DESCRIPTION
650	1501563YZMA		AXLE,23.14LK1 BSHG 16
652	1501089MA		SPROCKET,AXLE WF
653	01X193MA		SCREW, 1/4-20 X 1.75
654	15X145MA		NUT, 1/4-20 HEX NYLOCK
655	1501114MA		BEARING,AXLE
671	017X83MA		WASHER, FLAT
673	1501138MA		BUSHING, WHEEL
675	1501839MA		TIRE & RIM, LEFT
676	577015MA		SCREW, SHR 1/4-20X1.7
677	15X145MA		NUT, 1/4-20 HEX NYLOCK
678	239MA		RING, RETAINER
679	73842MA		PIN, KLIK .25 X 1.38 DIA
680	1501838MA		TIRE & RIM, RIGHT

Not For Reproduction

Copyright © Briggs & Stratton. All Rights reserved

Hardware Identification & Torque Specifications

Torque Specification Chart

FOR STANDARD METRIC MACHINE HARDWARE (Tolerance ± 20%)

Property Class	5.6 Class 5.6		8.8 Class 8.8		10.9 Class 10.9		12.9 Class 12.9	
Size Of Hardware	*in/lbs* **ft/lbs**	Nm.	*in/lbs* **ft/lbs**	Nm.	*in/lbs* **ft/lbs**	Nm.	*in/lbs* **ft/lbs**	Nm.
M3	*5.88*	*.56*	*13.44*	*1.28*	*19.2*	*1.80*	*22.92*	2.15
M4	*13.44*	*1.28*	*30.72*	*2.90*	*43.44*	*4.10*	*52.56*	4.95
M5	*26.4*	*2.50*	*60.96*	*5.75*	**5.97**	*8.10*	**7.15**	9.7
M6	*44.64*	*4.3*	**7.3**	*9.9*	**10.3**	*14*	**12.1**	16.5
M7	**5.2**	*7.1*	**12.1**	*16.5*	**16.9**	*23*	**19.9**	27
M8	**7.7**	*10.5*	**17.7**	*24*	**25**	*34*	**29**	40
M10	**15**	*21*	**35**	*48*	**50**	*67*	**59**	81
M12	**26**	*36*	**61**	*83*	**86.2**	*117*	**103**	140
M14	**42**	*58*	**101**	*132*	**136**	*185*	**162**	220
M16	**64**	*88*	**147**	*200*	**210**	*285*	**250**	340
M18	**89**	*121*	**202**	*275*	**287**	*390*	**346**	470
M20	**126**	*171*	**290**	*390*	**405**	*550*	**486**	660
M22	**169**	*230*	**390**	*530*	**559**	*745*	**656**	890
M24	**217**	*295*	**497**	*375*	**708**	*960*	**840**	1140
M27	**320**	*435*	**733**	*995*	**1032**	*1400*	**1239**	1680
M30	**435**	*590*	**995**	*1350*	**1401**	*1900*	**1681**	2280
M33	**590**	*800*	**1349**	*1830*	**1902**	*2580*	**2278**	3090
M36	**759**	*1030*	**1740**	*2360*	**2441**	*3310*	**2935**	3980
M39	**988**	*1340*	**2249**	*3050*	**3163**	*4290*	**3798**	5150

The guides and ruler furnished below are designed to help you select the appropriate hardware.

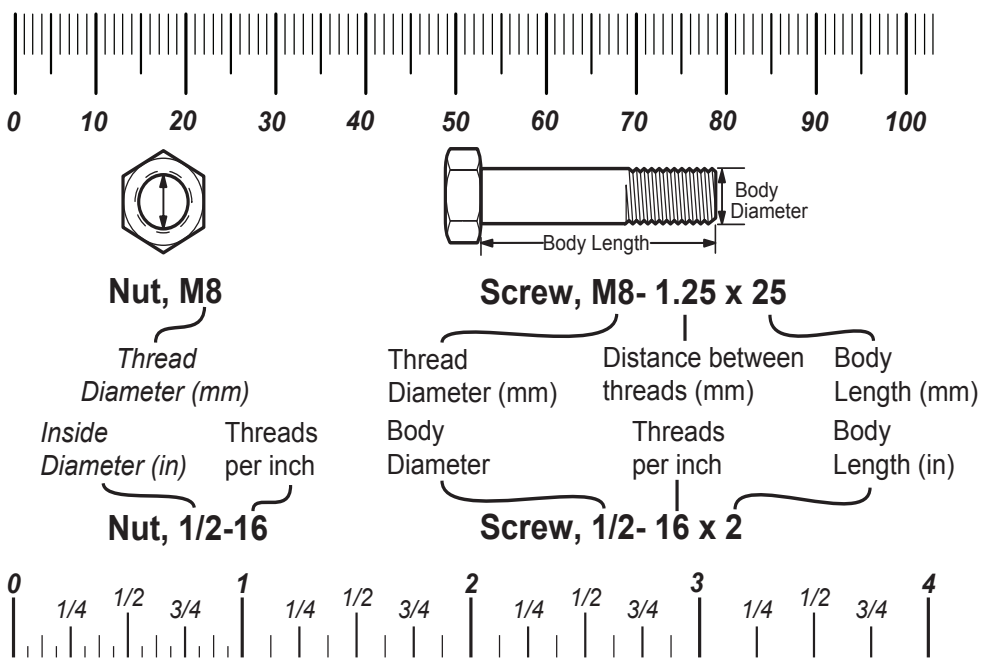

Standard Hardware Sizing

When a washer or nut is identified as **1/2"** (M8), this is the *Nominal size*, meaning the *inside diameter* is 1/2 inch (8mm metric thread diameter); if a second number is present it represents the *threads per inch* (distance between threads).

When bolt or capscrew is identified as **1/2 - 16 x 2"** (M8 - 1.25 x 50), this means the *Nominal size*, or body diameter is 1/2 inch (8mm metric thread diameter), the second number,16, represents the *threads per inch, (distance between threads).* The final number is the body length of the bolt or screw, 2 inches (50mm).

Torque Specification Chart

FOR STANDARD MACHINE HARDWARE (Tolerance ± 20%)

Hardware Grade	No Marks SAE Grade 2		SAE Grade 5		SAE Grade 8	
Size Of Hardware	*in/lbs* **ft/lbs**	Nm.	*in/lbs* **ft/lbs**	Nm.	*in/lbs* **ft/lbs**	Nm.
8-32	*19*	2.1	*30*	3.4	*41*	4.6
8-36	*20*	2.3	*31*	3.5	*43*	4.9
10-24	*27*	3.1	*43*	4.9	*60*	6.8
10-32	*31*	3.5	*49*	5.5	*68*	7.7
1/4-20	*66*	7.6	**8**	10.9	**12**	16.3
1/4-28	*76*	8.6	**10**	13.6	**14**	19.0
5/16-18	**11**	15.0	**17**	23.1	**25**	34.0
5/16-24	**12**	16.3	**19**	25.8	**29**	34.0
3/8-16	**20**	27.2	**30**	40.8	**45**	61.2
3/8-24	**23**	31.3	**35**	47.6	**50**	68.0
7/16-14	**30**	40.8	**50**	68.0	**70**	95.2
7/16-20	**35**	47.6	**55**	74.8	**80**	108.8
1/2-13	**50**	68.0	**75**	102.0	**110**	149.6
1/2-20	**55**	74.8	**90**	122.4	**120**	163.2
9/16-12	**65**	88.4	**110**	149.6	**150**	204.0
9/16-18	**75**	102.0	**120**	163.2	**170**	231.2
5/8-11	**90**	122.4	**150**	204.0	**220**	299.2
5/8-18	**100**	136	**180**	244.8	**240**	326.4
3/4-10	**160**	217.6	**260**	353.6	**386**	525.0
3/4-16	**180**	244.8	**300**	408.0	**420**	571.2
7/8-9	**140**	190.4	**400**	544.0	**600**	816.0
7/8-14	**155**	210.8	**440**	598.4	**660**	897.6
1-8	**220**	299.2	**580**	788.8	**900**	1,244.0
1-12	**240**	326.4	**640**	870.4	**1,000**	1,360.0

NOTES

1. These torque values are to be used for all hardware excluding: locknuts, self-tapping screws, thread forming screws, sheet metal screws and socket head setscrews.
2. Recommended seating torque values for locknuts:
   a. for prevailing torque locknuts - use 65% of grade 5 torques.
   b. for flange whizlock nuts and screws - use 135% of grade 5 torques.
3. Unless otherwise noted on assembly drawings, all torque values must meet this specification.

Common Hardware Types

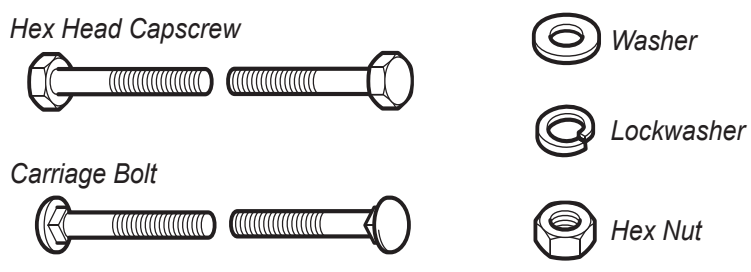

Wrench & Fastener Size Guide

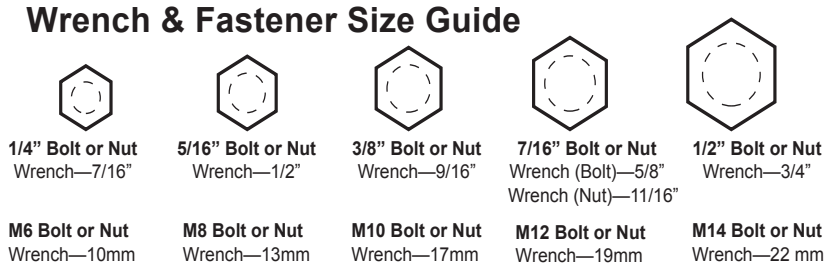

STIGA

Copyright © Briggs & Stratton. All Rights reserved