Parts Manual

Mfg. No: 621500x16NB
Single Stage Snow Thrower (2004)

Copyright © Briggs & Stratton. All Rights reserved

22-Jun-2026

Model Components

Page

Auger Housing. 4
Chute Rod Assembly. 6
Decals. 8
Discharge Chute. 10
Electric Starter. 12
Engine Assembly. 14
Frame Assembly. 16
Handle Assembly. 18
Top Cover Assembly. 20
Wheel Assembly. 22
Torque Specification Chart. 24

Not For Reproduction

Copyright © Briggs & Stratton. All Rights reserved

Auger Housing

Note: Unless noted otherwise, use the standard torque specifications

Mfg. No: 621500x16NB

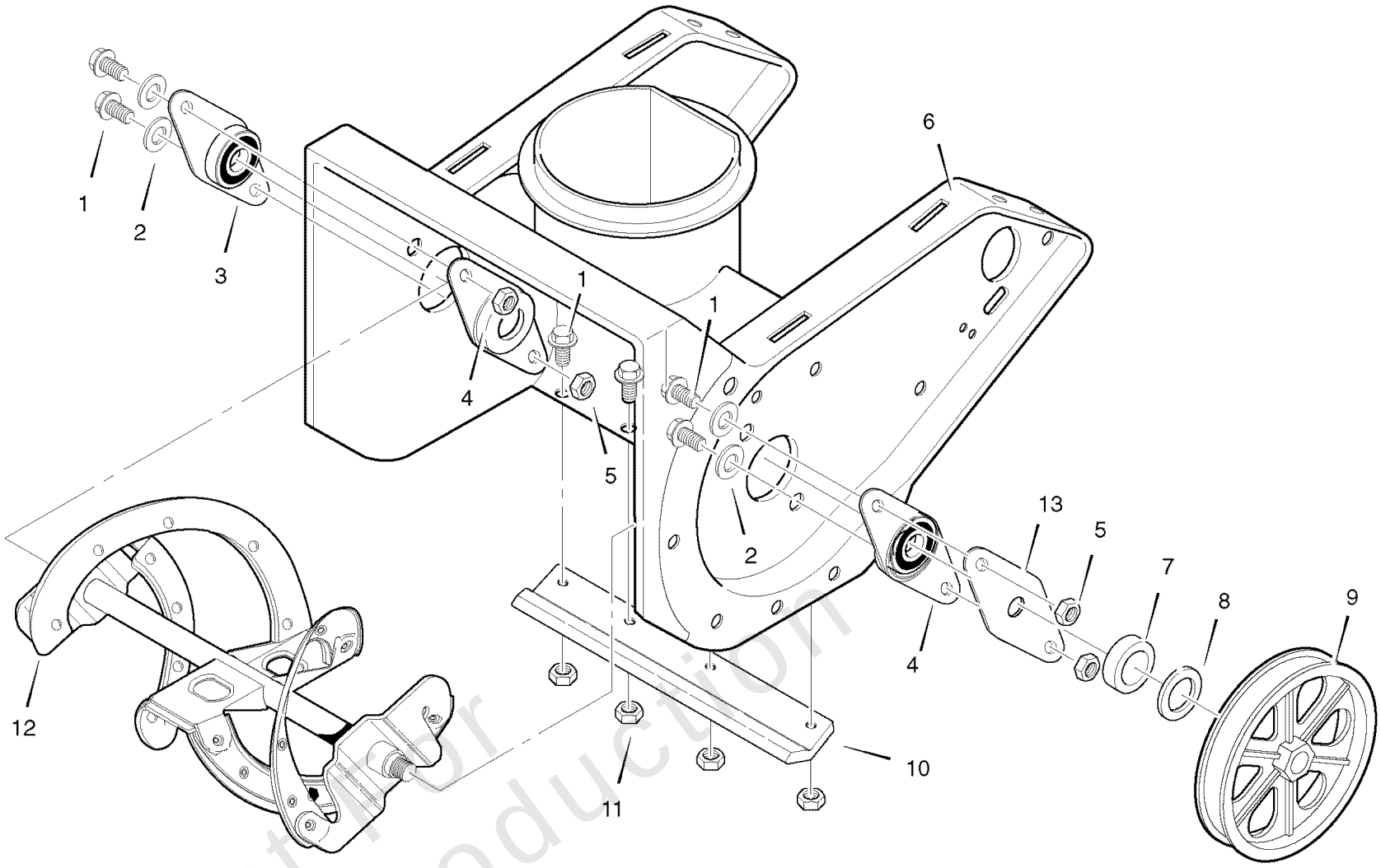

Not for Reproduction

Copyright © Briggs & Stratton. All Rights reserved

Auger Housing

REF NO	PART NO	QTY	DESCRIPTION
1	MT579052		SCREW .25-20X.63
2	MT71067		WASHER, FLAT .281x.63x.065
3	MT54836		PLATE, BEARING RETAINER
4	MT583459		PLATE & BEARING ASSY
5	MT73826		NUT, LOCK .25-20
6	MT340381E701		AUGER HOUSING 21"
7	MT578101		SPACER, SLEEVE
8	MT40677		WASHER, FLAT .640x1.25x.06
9	MT333446		PULLEY, POLY V
10	MT302418		SCRAPER BLADE
11	MT302635		NUT, LOCK .25-20
12	MT321961E701		AUGER ASSY
13	MT333796		RETAINER BEARING

Not For Reproduction

Copyright © Briggs & Stratton. All Rights reserved

Chute Rod Assembly

Note: Unless noted otherwise, use the standard torque specifications

Mfg. No: 621500x16NB

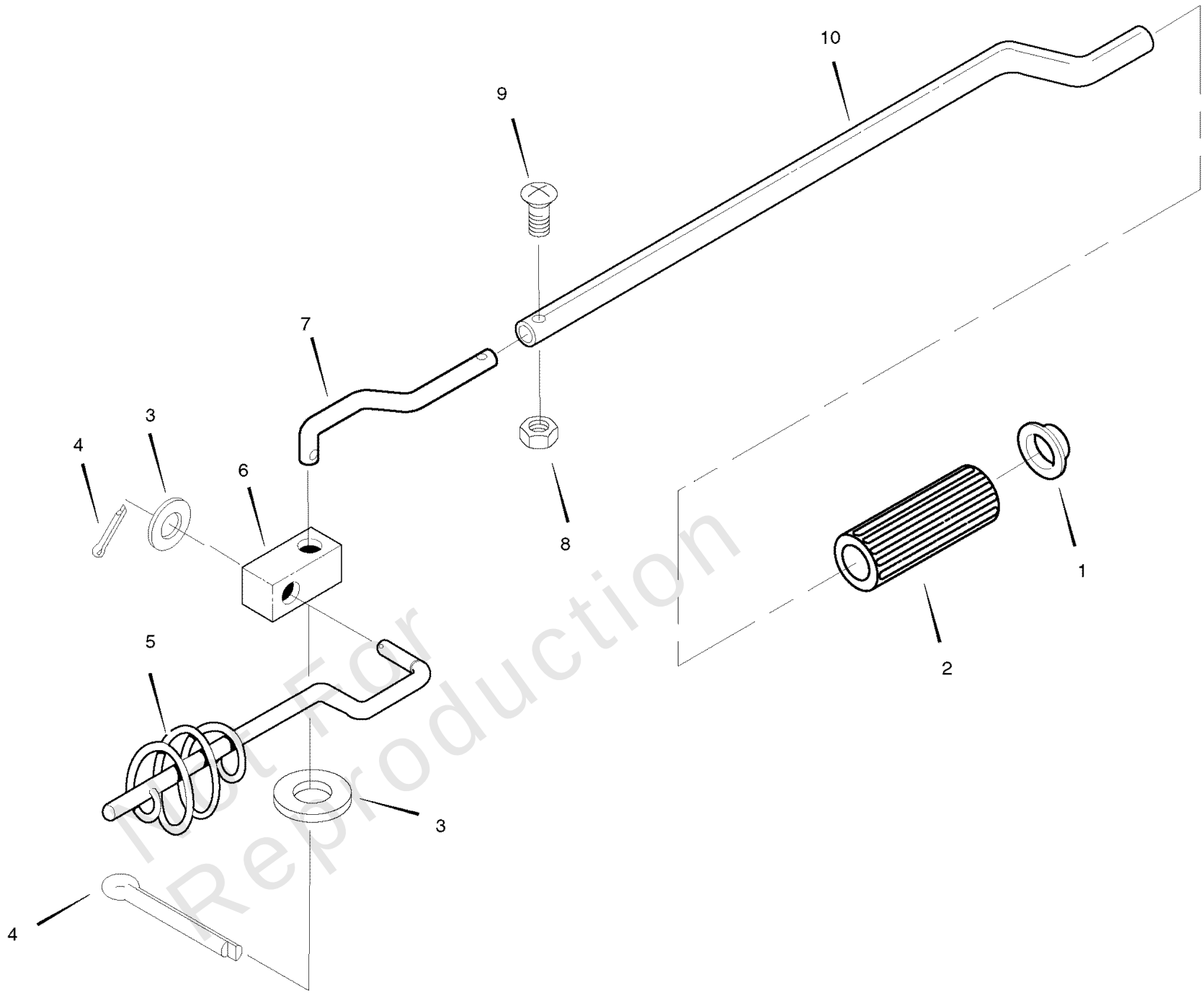

Not For Reproduction

Copyright © Briggs & Stratton. All Rights reserved

Chute Rod Assembly

REF NO	PART NO	QTY	DESCRIPTION
1	MT331532		PUSH NUT
2	MT307755		KNOB, GRIP
3	MT12452		WASHER, FLAT .400x.75x.02
4	MT71081		PIN, COTTER
5	MT307742		ROD, CHUTE CNTRL LWR
6	MT51564		BLOCK, PIVOT
7	MT307756		ROD, CHUTE CNTRL MID
8	MT314159		NUT, LOCK 10-32
9	MT314158		SCREW, 10-32X.88
10	MT309449		ROD, CHUTE UPPER

Not For Reproduction

Copyright © Briggs & Stratton. All Rights reserved

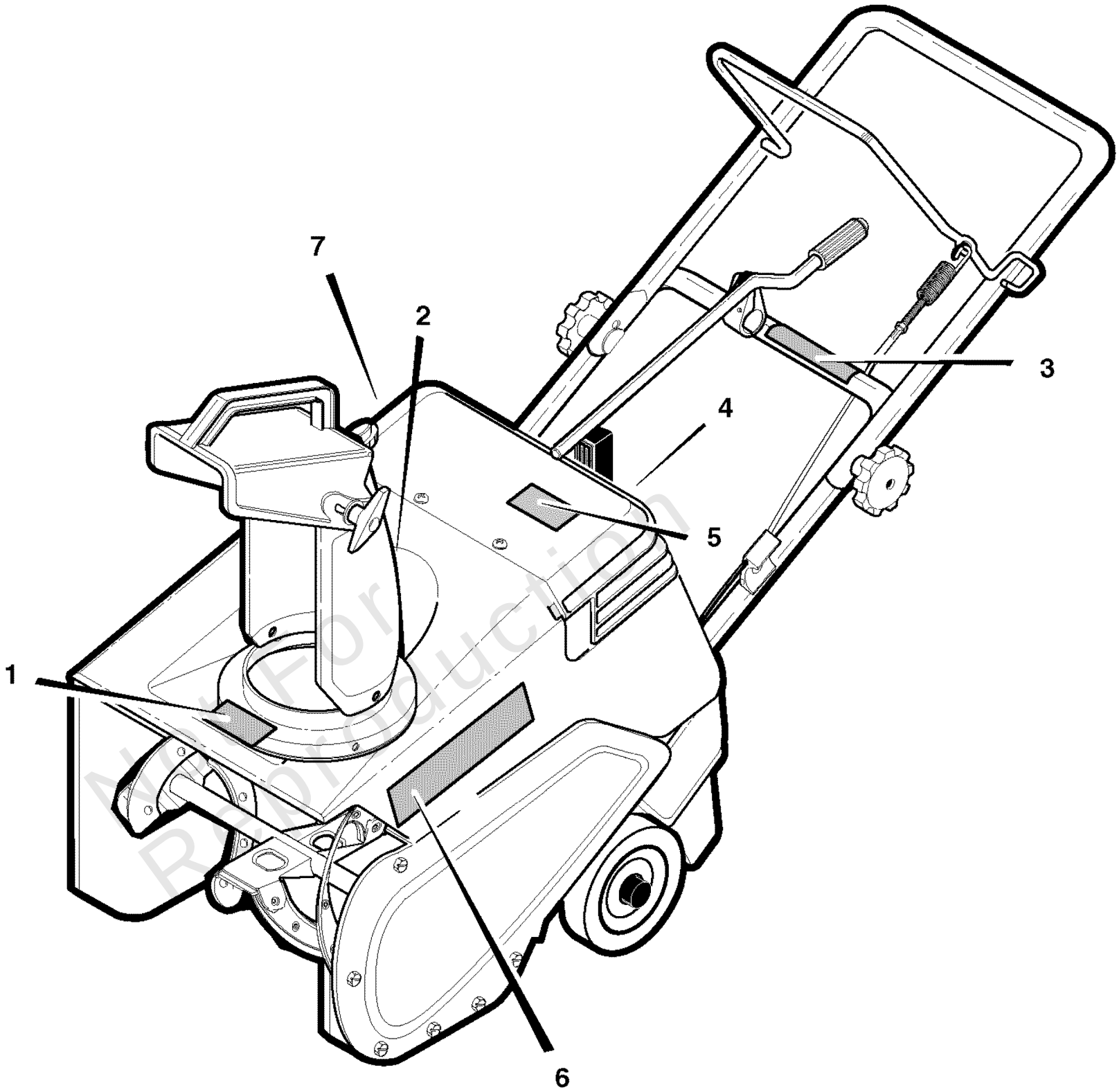

Not For Reproduction

Decals

REF NO	PART NO	QTY	DESCRIPTION
1	MT48X5262		DECAL, DANGER AUGER
2	MT48X5642		DECAL, DANGER CHUTE
3	MT337524		DECAL, AUGER CONTROL
4	MT340709		DECAL, CONTROL PANEL ST0521E (621500x16NB)
5	MT69880		DECAL, HOT MUFFLER
6	MT48X5260		DECAL, FRONTIER ST0521
7	MT48X5640		DECAL, EPA
*	MTF-0410107C		OPERATOR'S MANUAL

Not For Reproduction

Copyright © Briggs & Stratton. All Rights reserved

Discharge Chute

Note: Unless noted otherwise, use the standard torque specifications

Mfg. No: 621500x16NB

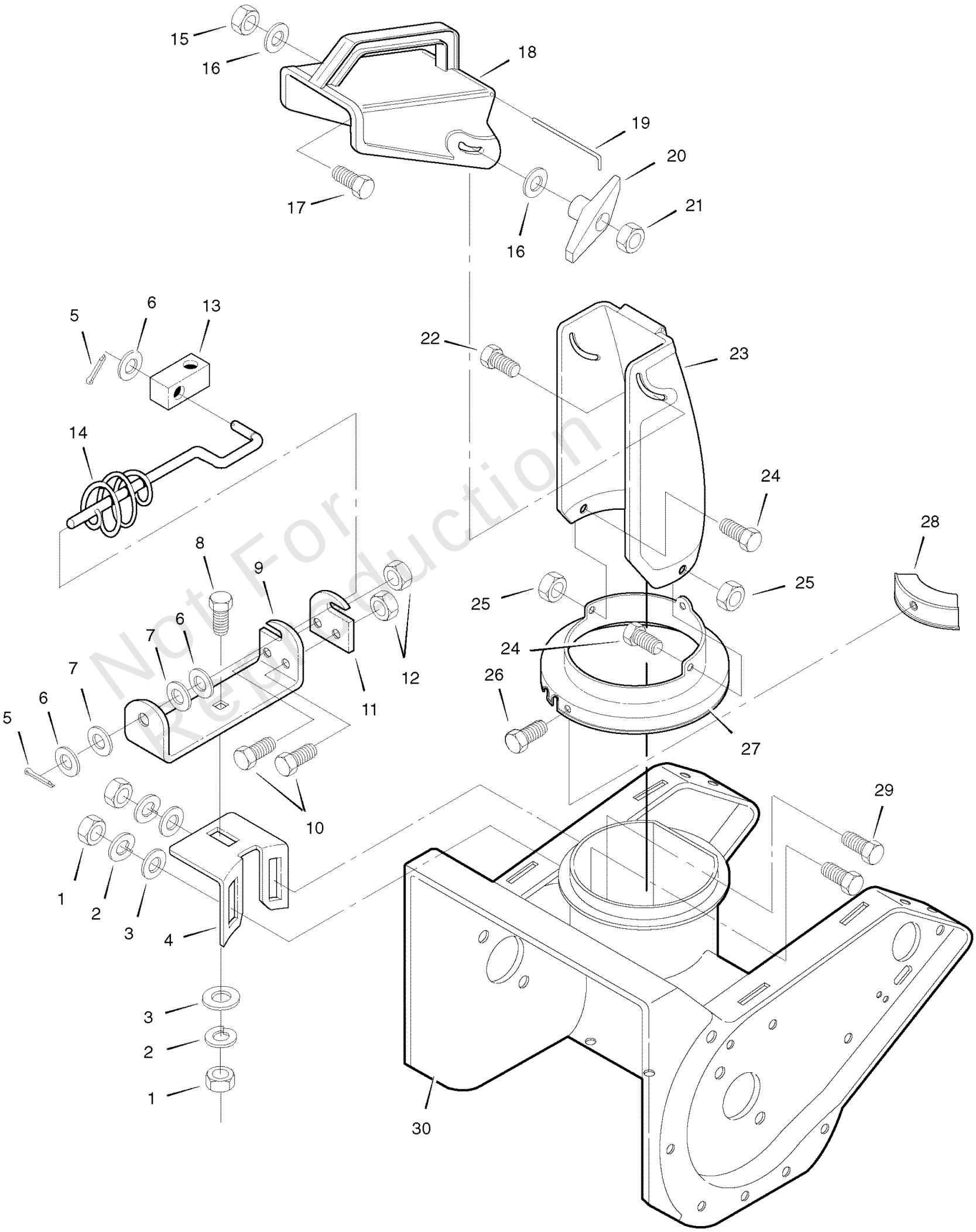

Not For Reproduction

Copyright © Briggs & Stratton. All Rights reserved

Discharge Chute

REF NO	PART NO	QTY	DESCRIPTION
1	MT15X144		NUT.31-18 HEX
2	MT71060		WASHER, LOCK
3	MT71071		WASHER, FLAT .349-0.69-.07
4	MT302505E701		BRKT, WORM ADJUST
5	MT71081		PIN, COTTER.094x0.75L
6	MT12452		WASHER, FLAT .400-0.75-.02
7	MT313431		WASHER, SPRING .395-0.73-.01
8	MT340720		BOLT-CARRIAGE .31-18x0.75
9	MT300728E701		BRKT, CHUTE ROD HOLE
10	MT313686		SCREW.25-20x0.50 HHC
11	MT307741		PLATE, CHUTE ROD
12	MT73826		NUT, LOCK.25-20 HEX
13	MT51564		BLOCK, PIVOT CHUTE
14	MT307742		ROD ASSEMBLY, LOWER CHUTE
15	MT71391		NUT, LOCK .31-18 HEX
16	MT71071		WASHER, FLAT .349-0.69-.07
17	MT578088		SCREW.31-18x0.75
18	MT305861		CHUTE, UPPER
19	MT310562		WIRE FORM, HINGE
20	MT57171		WINGKNOB
21	MT15X144		NUT.31-18 HEX
22	MT302843		BOLT-CARRIAGE .31-18x1.50
23	MT305862		CHUTE, LOWER
24	MT313686		SCREW.25-20x0.50
25	MT73826		NUT, LOCK .25-20
26	MT56962		SCREW.25-14x0.62
27	MT307842		CHUTE RING
28	MT300790		CLIP, CHUTE RING
29	MT340720		BOLT-CARRIAGE .31-18x0.75
30	MT340381E701		AUGER HSG, 21"

Not For Reproduction

Note: Unless noted otherwise, use the standard torque specifications

Mfg. No: 621500x16NB

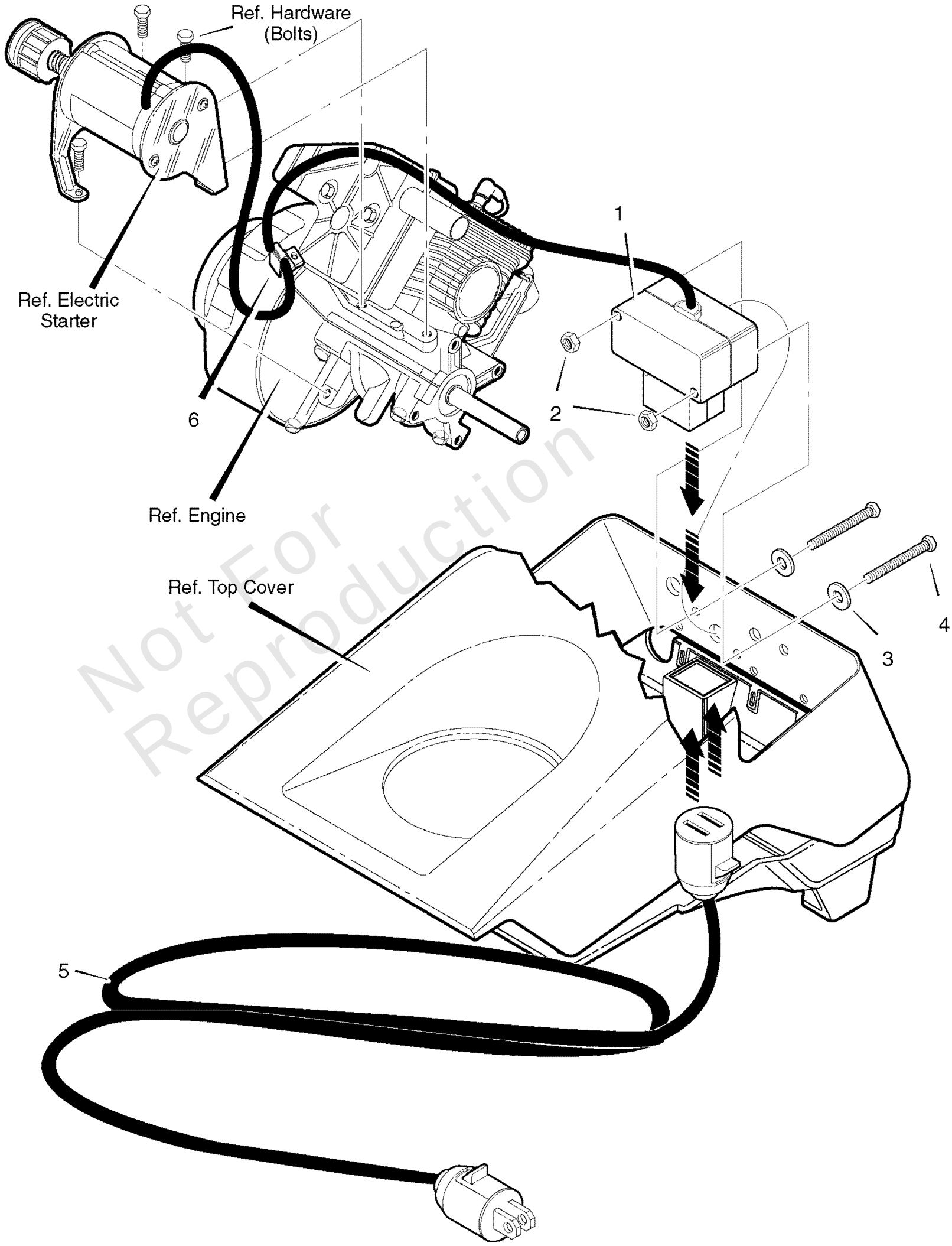

Not For Reproduction

Copyright © Briggs & Stratton. All Rights reserved

Electric Starter

REF NO	PART NO	QTY	DESCRIPTION
1	-----		INCLUDED WITH ENGINE
2	MT271163		NUT, KEPS 8-32
3	MT414106		WASHER, FLAT
4	MT311633		SCREW 8-32x3.00
5	MT56023		CORD, EXTENSION
6	MT1501993		STARTER CORD RETAINER

Not For Reproduction

Copyright © Briggs & Stratton. All Rights reserved

Note: Unless noted otherwise, use the standard torque specifications

Mfg. No: 621500x16NB

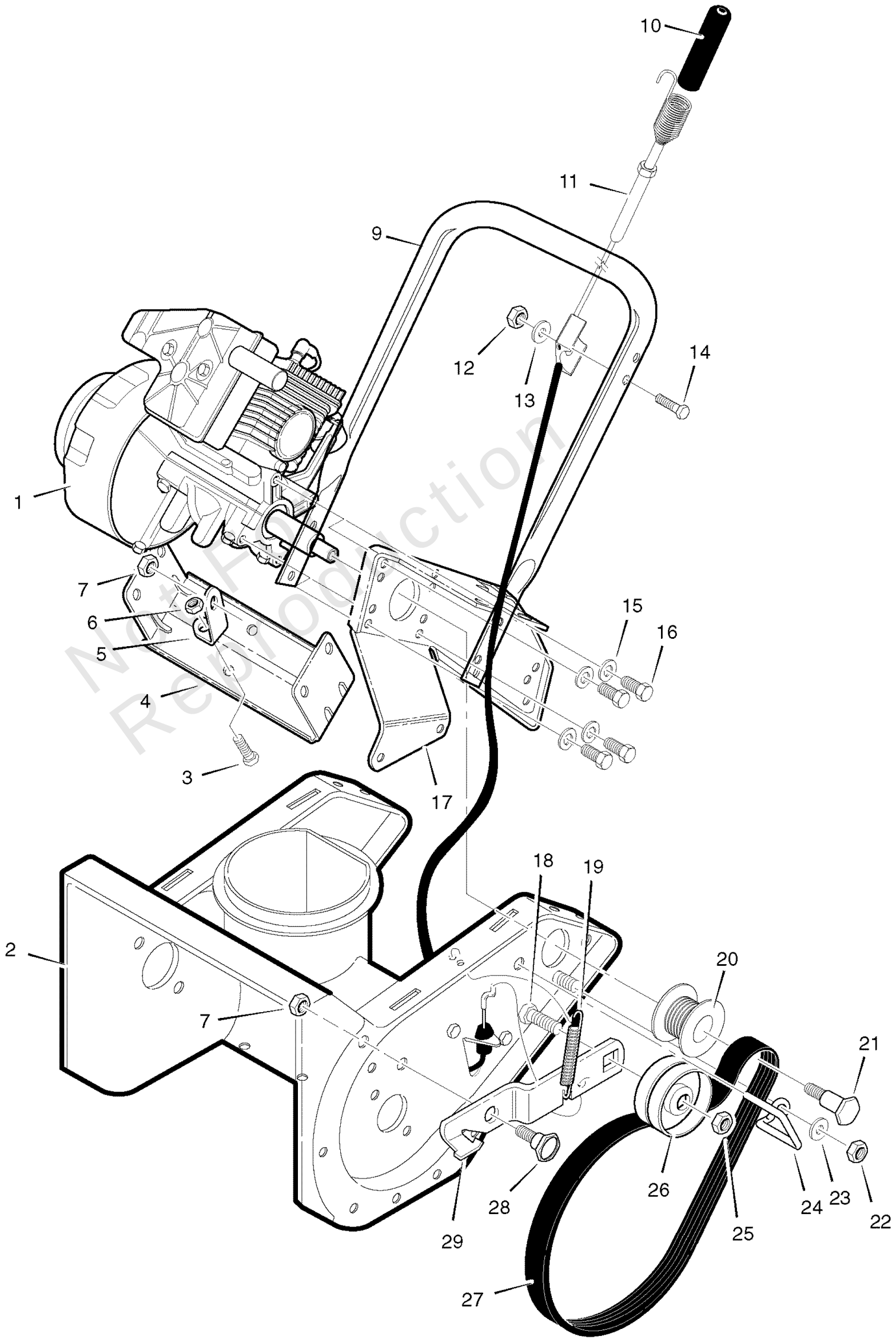

Not For Reproduction

Copyright © Briggs & Stratton. All Rights reserved

Engine Assembly

REF NO	PART NO	QTY	DESCRIPTION
1	-----		ENGINE
2	MT340381E701		AUGER HOUSING, 21"
3	MT313780		SCREW, .31-18x .5
4	MT301419E701		SUPPORT, FRAME
5	MT301415E701		SUPPORT, ENGINE
6	MT71391		NUT.31-18 HEX
7	MT71391		NUT .31-18 HEX
9	MT309964		HANDLE, LOWER
10	MT314142		COVER, CABLE SPRING
11	MT316001		CABLE, DRIVE
12	MT73826		LOCKNUT .25-20 HEX
13	MT71067		WASHER .286-0.62-.07
14	MT70971		SCREW .25-20x1.50
15	MT71060		WASHER .318-0.56-.05
16	MT313676		SCREW, .31-18x .63
17	MT301421E701		PLATE, REAR
18	MT45892		BOLT, CARRIAGE .38-16x1.50
19	MT339017		SPRING, IDLER BRAKE
20	MT1501776		PULLEY, 4.5 HP
21	MT333805		BOLT, SHOULDER .625x.280
22	MT71391		NUT.31-18 HEX
23	MT120386		WASHER, FLAT .312X .73X.065
24	MT340428		GUIDE, BELT
25	MT590		JAM NUT.38-16 HEX
26	MT48924		PULLEY, IDLER
27	333721MA		BELT, POLY-V 10 RIB 35.14
28	MT333594		BOLT, SHOULDER
29	MT339415E701MA		BRACKET, IDLER ARM
--	MTF-0410107C		OWNER’S MANUAL

Not For Reproduction

Frame Assembly

Note: Unless noted otherwise, use the standard torque specifications

Mfg. No: 621500x16NB

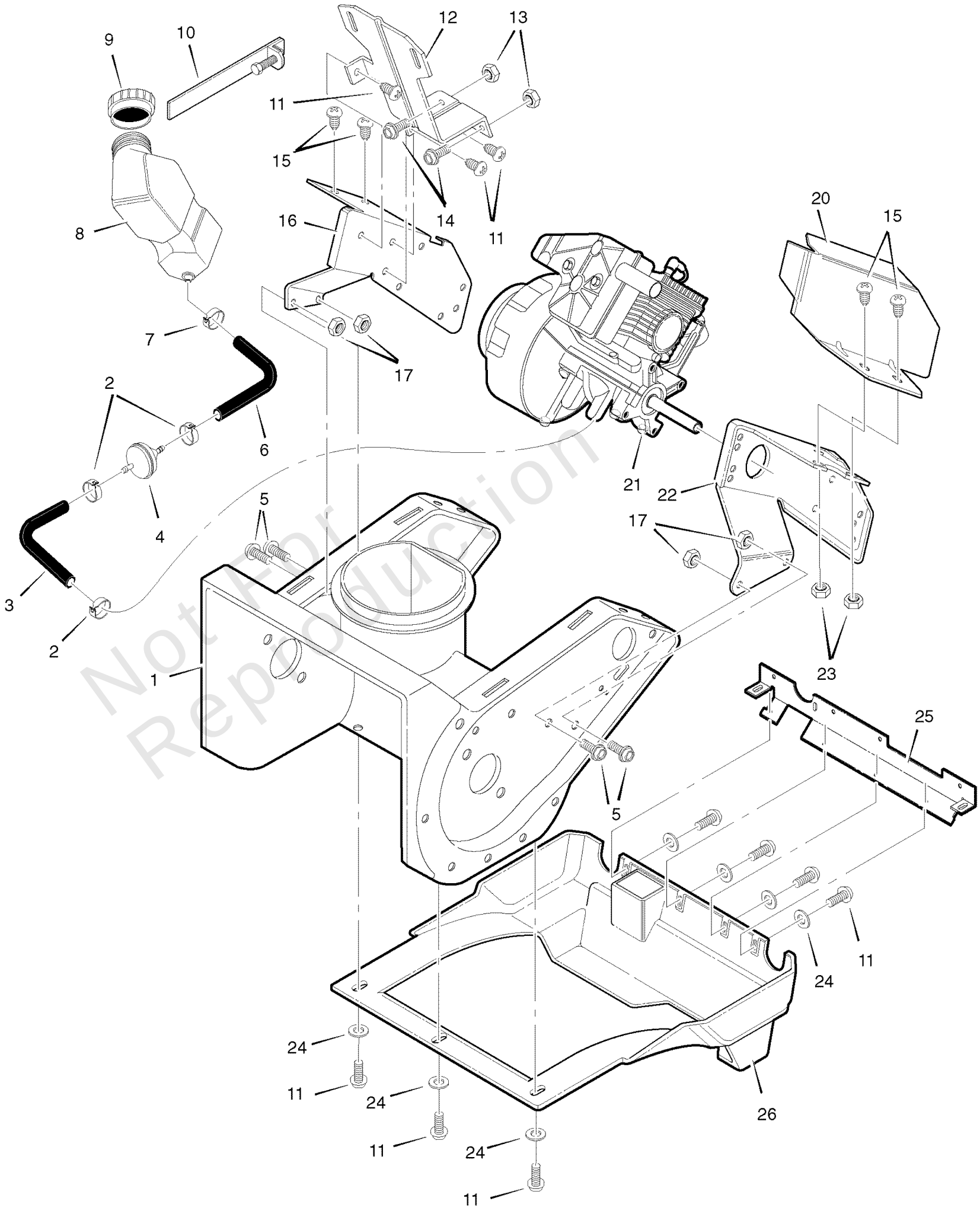

Not For Reproduction

Frame Assembly

REF NO	PART NO	QTY	DESCRIPTION
1	MT340381E701		AUGER HOUSING 21"
2	MT323387		CLAMP, TUBING
3	MT323395		TUBING, FUEL
4	MT56679		FILTER, FUEL
5	MT313780		SCREW .31-18x.50
6	MT323363		TUBING, FUEL
7	MT47345		CLAMP, TUBING
8	MT326142		FUEL TANK
9	MT327018		CAP, FUEL
10	MT311671		CLAMP, WORM DR
11	MT309814		SCREW 10-24x.62
12	MT308677		BRACKET, FUEL TANK
13	MT997316		NUT, LOCK 10-24
14	MT274707		SCREW 10-24x.50
15	MT318139		SCREW .25-20x.62
16	MT301420E701		PLATE, REAR MT RH
17	MT71391		NUT, LOCK .31-18
20	MT311738E701		HEAT SHIELD
21	-----		ENGINE
22	MT301421E701		PLATE, REAR MT LH
23	MT302635		NUT, LOCK .25-20
24	MT303041		WASHER, FLAT
25	MT307761		BRACKET, COVER
26	MT305869		BOTTOM COVER ST0521M (621501x16NB)
*	MT1501743		BOTTOM COVER ST0521E (621500x16NB)

Not For Reproduction

Copyright © Briggs & Stratton. All Rights reserved

Handle Assembly

Note: Unless noted otherwise, use the standard torque specifications

Mfg. No: 621500x16NB

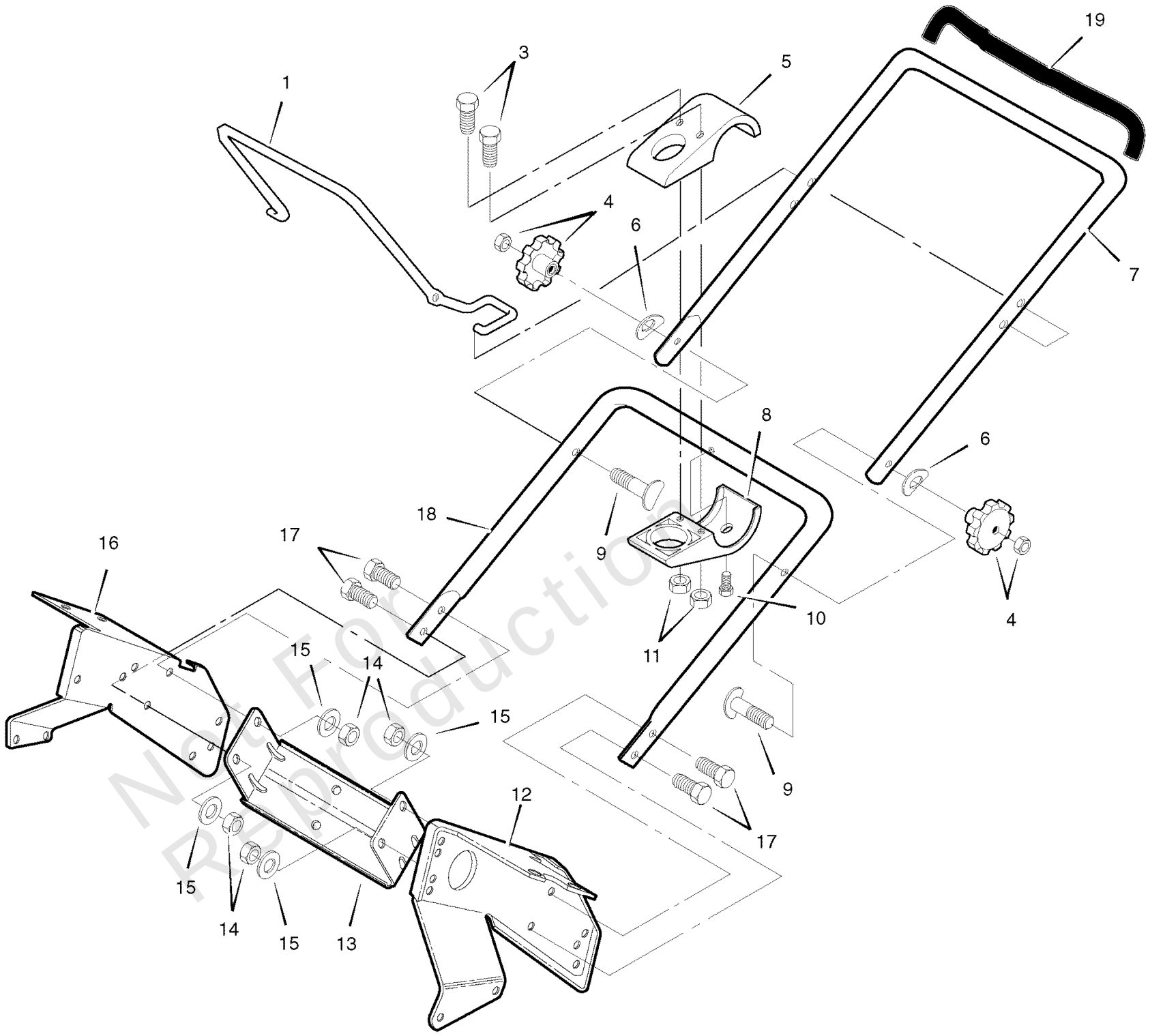

Not For Reproduction

Handle Assembly

REF NO	PART NO	QTY	DESCRIPTION
1	MT307747		DRIVEBAR
3	MT309815		SCREW 10-24x1.00
4	MT329935		KNOB
5	MT308715		BRACKET, UPPER CRANK
6	MT311936		WASHER, FORMED
7	MT314135		HANDLE, UPPER w/FOAM
8	MT308716		BRACKET, LOWER CRANK
9	MT337584		BOLT, FORMED HEAD
10	MT310169		SCREW .25-20x.62
11	MT71055		NUT, LOCK 10-24
12	MT301421E701		PLATE, REAR MT LH
13	MT301419E701		FRAME SUPPORT
14	MT71391		NUT, LOCK .31-18
15	MT71060		WASHER, LOCK
16	MT301420E701		PLATE, REAR MT RH
17	MT313676		SCREW .31-18x.75
18	MT309964E701		LOWER HANDLE
19	MT300405		TUBING, FOAM

Not For Reproduction

Copyright © Briggs & Stratton. All Rights reserved

Top Cover Assembly

Note: Unless noted otherwise, use the standard torque specifications

Mfg. No: 621500x16NB

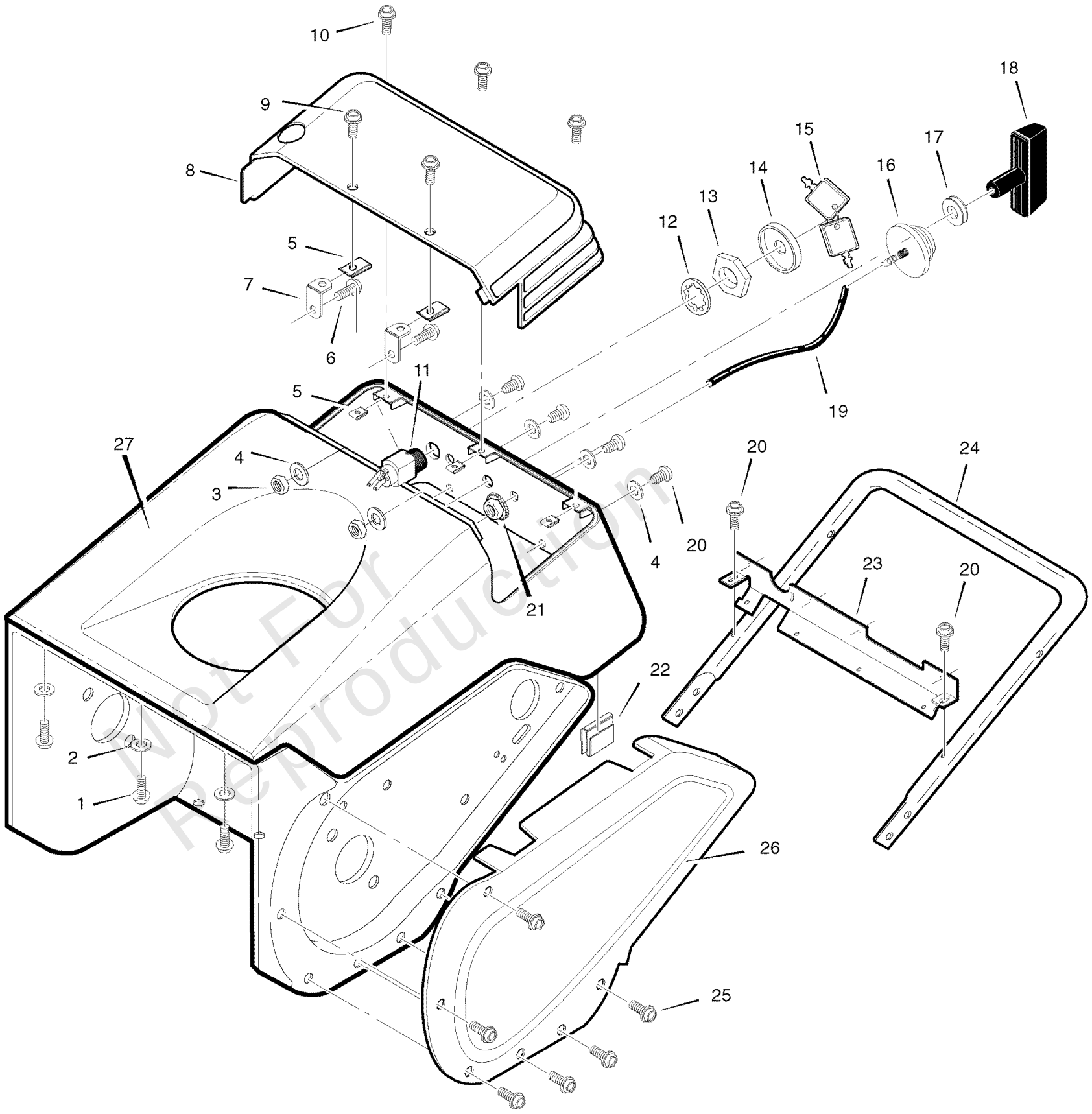

Not For Reproduction

Copyright © Briggs & Stratton. All Rights reserved

Top Cover Assembly

REF NO	PART NO	QTY	DESCRIPTION
1	MT309813		SCREW 10-14x.63
2	MT711666		WASHER, FLAT
3	MT71055		NUT, LOCK 10-24
4	MT303041		WASHER, FLAT
5	MT309811		NUT, U TYPE
6	MT12342		SCREW 10-24x.50
7	MT312102		BRACKET, ACCESS COVER
8	MT305871		COVER, ENGINE ACCESS
9	MT312094		SCREW 10-16x.62
10	MT312362		SCREW 10-16x.75
11	MT56992		INGNITION SWITCH
12	MT313683		WASHER, INTERNAL LOCK
13	MT300193		NUT, .62-32 PLASTIC
14	MT300194		BOOT, SWITCH
15	MT49643		KEYS & RING
16	MT54601		PRIMER BULB
17	MT57587		GROMMET & WASHER
18	MT333643		KNOB, STANDARD T
19	MT1259		HOSE, PRIMER
20	MT309814		SCREW 10-24x.63
21	MT303008		NUT .25-20 KEPS
22	MT313057		S CLIP
23	MT307761E701		BRACKET, SHROUD MTG
24	MT309964E701		LOWER HANDLE
25	MT310798		SCREW 10-24x.38
26	MT302416		COVER, BELT
27	MT305943		COVER, TOP

Not For Reproduction

Wheel Assembly

Note: Unless noted otherwise, use the standard torque specifications

Mfg. No: 621500x16NB

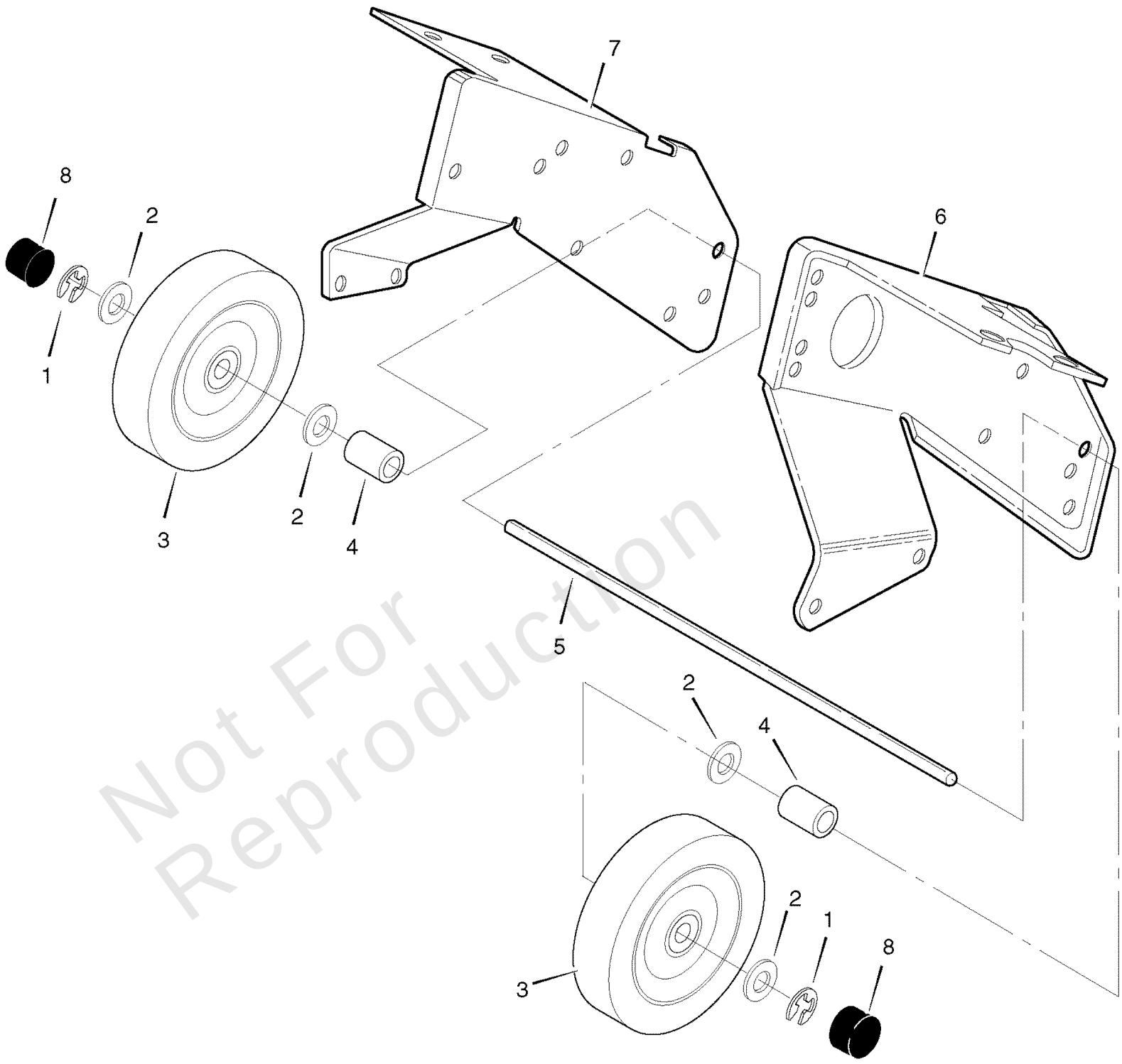

Not For Reproduction

Copyright © Briggs & Stratton. All Rights reserved

Wheel Assembly

REF NO	PART NO	QTY	DESCRIPTION
1	MT577598		RING, RET. E
2	MT71072		WASHER, FLAT .406x.81x.07
3	MT1501741		7.75"X1.75" WHEEL
4	MT309656		SPACER, SLEEVE
5	MT307719		AXLE SHAFT
6	MT301421E701		PLATE, REAR MT LH
7	MT301420E701		PLATE, REAR MT RH
8	MT577037		CAP, HUB

Not For Reproduction

Copyright © Briggs & Stratton. All Rights reserved

Hardware Identification & Torque Specifications

Torque Specification Chart

FOR STANDARD METRIC MACHINE HARDWARE (Tolerance ± 20%)

Property Class	5.6 Class 5.6		8.8 Class 8.8		10.9 Class 10.9		12.9 Class 12.9	
Size Of Hardware	*in/lbs* **ft/lbs**	Nm.	*in/lbs* **ft/lbs**	Nm.	*in/lbs* **ft/lbs**	Nm.	*in/lbs* **ft/lbs**	Nm.
M3	*5.88*	*.56*	*13.44*	*1.28*	*19.2*	*1.80*	*22.92*	2.15
M4	*13.44*	*1.28*	*30.72*	*2.90*	*43.44*	*4.10*	*52.56*	4.95
M5	*26.4*	*2.50*	*60.96*	*5.75*	**5.97**	*8.10*	**7.15**	9.7
M6	*44.64*	*4.3*	**7.3**	*9.9*	**10.3**	*14*	**12.1**	16.5
M7	**5.2**	*7.1*	**12.1**	*16.5*	**16.9**	*23*	**19.9**	27
M8	**7.7**	*10.5*	**17.7**	*24*	**25**	*34*	**29**	40
M10	**15**	*21*	**35**	*48*	**50**	*67*	**59**	81
M12	**26**	*36*	**61**	*83*	**86.2**	*117*	**103**	140
M14	**42**	*58*	**101**	*132*	**136**	*185*	**162**	220
M16	**64**	*88*	**147**	*200*	**210**	*285*	**250**	340
M18	**89**	*121*	**202**	*275*	**287**	*390*	**346**	470
M20	**126**	*171*	**290**	*390*	**405**	*550*	**486**	660
M22	**169**	*230*	**390**	*530*	**559**	*745*	**656**	890
M24	**217**	*295*	**497**	*375*	**708**	*960*	**840**	1140
M27	**320**	*435*	**733**	*995*	**1032**	*1400*	**1239**	1680
M30	**435**	*590*	**995**	*1350*	**1401**	*1900*	**1681**	2280
M33	**590**	*800*	**1349**	*1830*	**1902**	*2580*	**2278**	3090
M36	**759**	*1030*	**1740**	*2360*	**2441**	*3310*	**2935**	3980
M39	**988**	*1340*	**2249**	*3050*	**3163**	*4290*	**3798**	5150

The guides and ruler furnished below are designed to help you select the appropriate hardware.

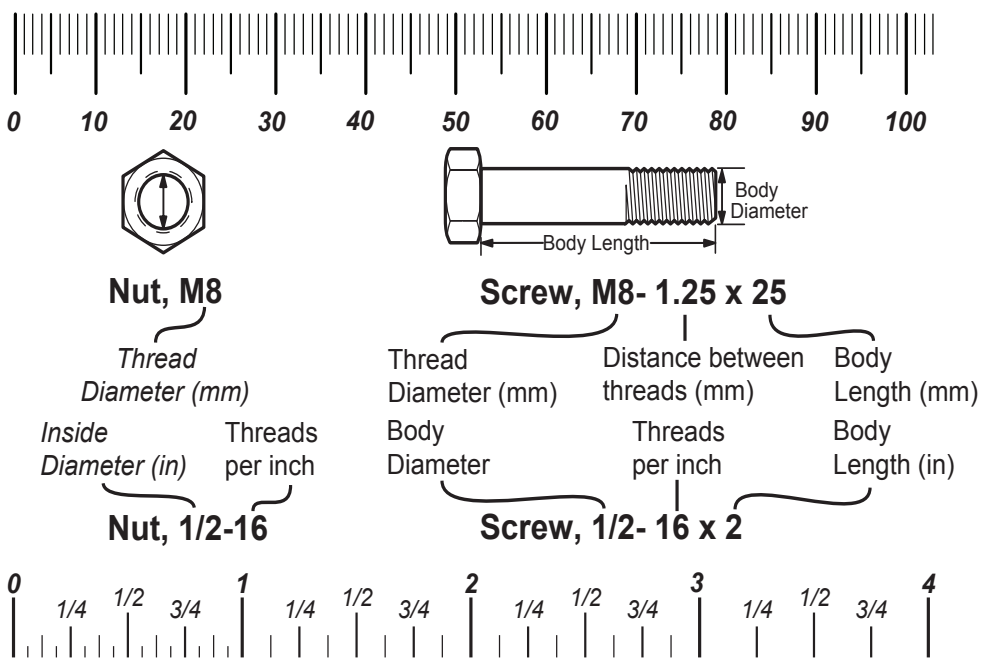

Standard Hardware Sizing

When a washer or nut is identified as **1/2"** (M8), this is the *Nominal size*, meaning the *inside diameter* is 1/2 inch (8mm metric thread diameter); if a second number is present it represents the *threads per inch* (distance between threads).

When bolt or capscrew is identified as **1/2 - 16 x 2"** (M8 - 1.25 x 50), this means the *Nominal size*, or body diameter is 1/2 inch (8mm metric thread diameter), the second number,16, represents the *threads per inch, (distance between threads).* The final number is the body length of the bolt or screw, 2 inches (50mm).

Torque Specification Chart

FOR STANDARD MACHINE HARDWARE (Tolerance ± 20%)

Hardware Grade	No Marks SAE Grade 2		SAE Grade 5		SAE Grade 8	
Size Of Hardware	*in/lbs* **ft/lbs**	Nm.	*in/lbs* **ft/lbs**	Nm.	*in/lbs* **ft/lbs**	Nm.
8-32	*19*	2.1	*30*	3.4	*41*	4.6
8-36	*20*	2.3	*31*	3.5	*43*	4.9
10-24	*27*	3.1	*43*	4.9	*60*	6.8
10-32	*31*	3.5	*49*	5.5	*68*	7.7
1/4-20	*66*	7.6	**8**	10.9	**12**	16.3
1/4-28	*76*	8.6	**10**	13.6	**14**	19.0
5/16-18	**11**	15.0	**17**	23.1	**25**	34.0
5/16-24	**12**	16.3	**19**	25.8	**29**	34.0
3/8-16	**20**	27.2	**30**	40.8	**45**	61.2
3/8-24	**23**	31.3	**35**	47.6	**50**	68.0
7/16-14	**30**	40.8	**50**	68.0	**70**	95.2
7/16-20	**35**	47.6	**55**	74.8	**80**	108.8
1/2-13	**50**	68.0	**75**	102.0	**110**	149.6
1/2-20	**55**	74.8	**90**	122.4	**120**	163.2
9/16-12	**65**	88.4	**110**	149.6	**150**	204.0
9/16-18	**75**	102.0	**120**	163.2	**170**	231.2
5/8-11	**90**	122.4	**150**	204.0	**220**	299.2
5/8-18	**100**	136	**180**	244.8	**240**	326.4
3/4-10	**160**	217.6	**260**	353.6	**386**	525.0
3/4-16	**180**	244.8	**300**	408.0	**420**	571.2
7/8-9	**140**	190.4	**400**	544.0	**600**	816.0
7/8-14	**155**	210.8	**440**	598.4	**660**	897.6
1-8	**220**	299.2	**580**	788.8	**900**	1,244.0
1-12	**240**	326.4	**640**	870.4	**1,000**	1,360.0

NOTES

1. These torque values are to be used for all hardware excluding: locknuts, self-tapping screws, thread forming screws, sheet metal screws and socket head setscrews.
2. Recommended seating torque values for locknuts:
   a. for prevailing torque locknuts - use 65% of grade 5 torques.
   b. for flange whizlock nuts and screws - use 135% of grade 5 torques.
3. Unless otherwise noted on assembly drawings, all torque values must meet this specification.

Common Hardware Types

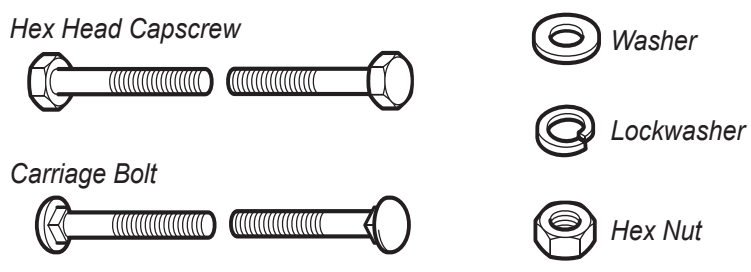

Wrench & Fastener Size Guide

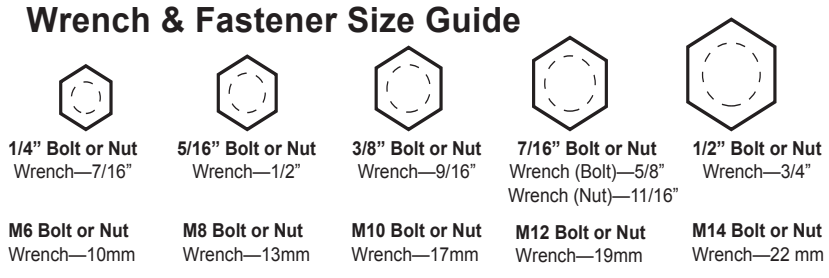

JOHN DEERE

Copyright © Briggs & Stratton. All Rights reserved