Parts Manual

Mfg. No: 543477-0048-E1

Copyright © Briggs & Stratton. All Rights reserved

22-Jun-2026

Model Components

	Page
Air Cleaners, Purge Lines	4
Alternators, Electric Starter, Armatures, Regulators	8
Blower Housings, Rotating Screens, Stub Shafts	10
Carburetor Overhaul Kit, Engine/Valve Gasket Sets	14
Carburetor, Fuel Pumps	16
Control Brackets, Links, Springs	20
Crankcase Covers, Camshaft	22
Cylinder Heads, Rocker Covers	24
Cylinders, Piston/Rings/Rod, Crankshaft	28
Flywheels, Air Guides, Speed Sensor	32
Intake Manifold, Intake Elbows, Gaskets	34
Mufflers, Exhaust Manifold	36
Oil Coolers, Filter, Oil Cooler Hoses	38
Replacement Engine - US & Canada	40
Wire Harness's, Wire Assembly	41
Model 54-61 Engine Accessories Catalog	43
Maintenance Kits	44
Lubrication	46
Oil Filter Side Outlet Mufflers	48
Center Outlet Mufflers	50
Starter Side Outlet Mufflers	52
Muffler Bracket Kits	54
Speed Control	56
Electrical	58
Stub Shafts	60
Spark Arrester/Deflector	62
Air Intake	64
Guarding	66
Electronic Throttle Kit	68

Not For Reproduction

Copyright © Briggs & Stratton. All Rights reserved

Mfg. No: 543477-0048-E1

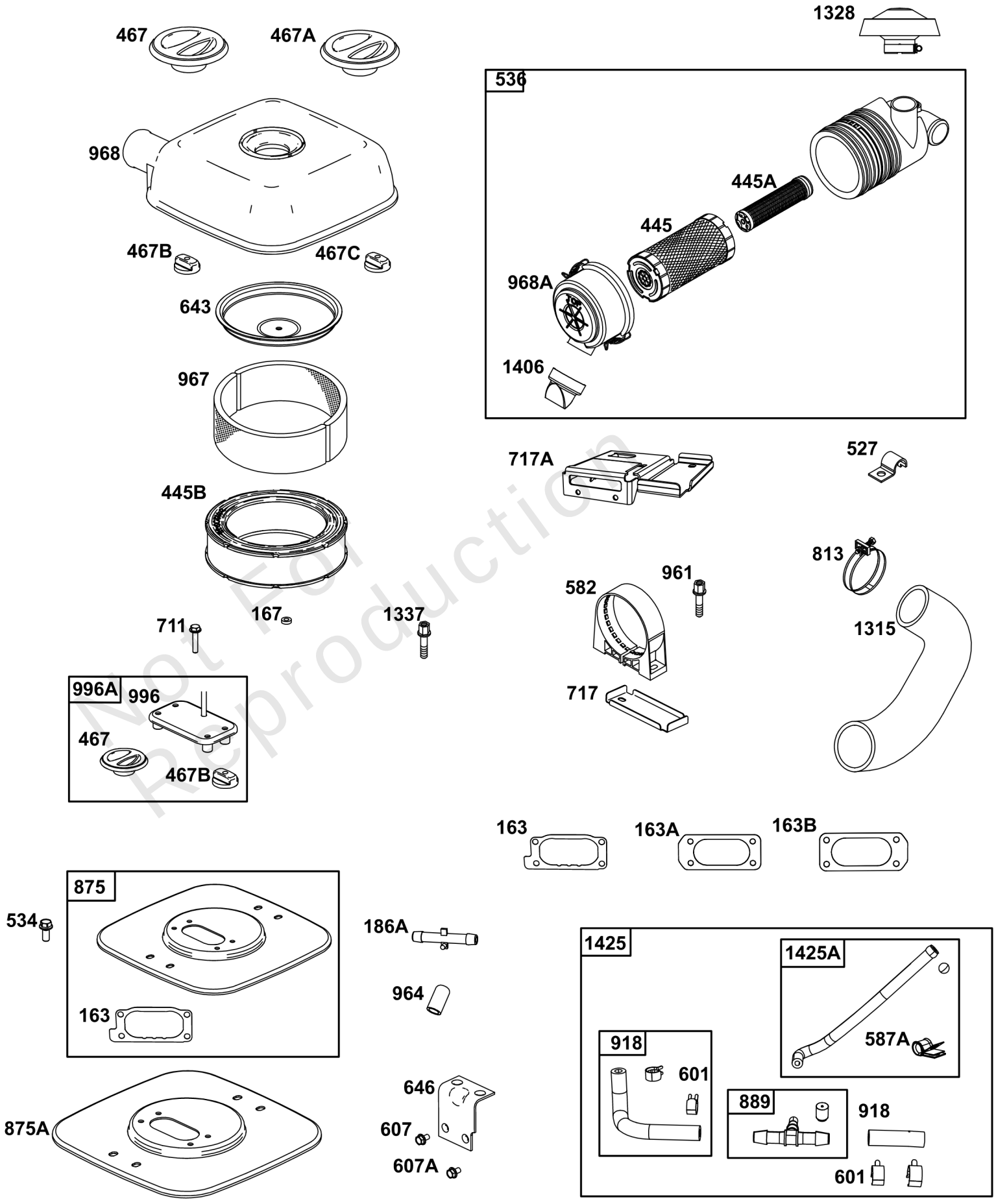

Not For Reproduction

Copyright © Briggs & Stratton. All Rights reserved

Air Cleaners, Purge Lines

REF NO	PART NO	QTY	DESCRIPTION
163	807375		GASKET, Air Cleaner
163A	843117		GASKET, Air Cleaner -Used After Code Date 06062200
167	841855		SEAL, Air Cleaner Nut -Used Before Code Date 14012800
186A	845121		CONNECTOR, Hose -(EVAP)
445	841497		FILTER, A/C Cartridge
445A	821136		FILTER, A/C Cartridge
445B	692519		FILTER, A/C Cartridge
467	846008		KNOB, Air Cleaner Cover -(M8) -Used After Code Date 14012700
467A	841846		KNOB, Air Cleaner Cover -(M6) -Used Before Code Date 14012800
467B	846432		KNOB, Air Cleaner Cover -(M8) -Used After Code Date 14012700
467C	844618		KNOB, Air Cleaner Cover -(M6) -Used Before Code Date 14012800
527	690423		CLAMP, Tube
534	692062		SCREW -(Air Cleaner) (M8x18mm)
536	809670		CLEANER, Air
582	809878		CLAMP, Air Cleaner
587A	807116		CLAMP, Tube -(Purge Line Hose)
601	844405		CLAMP, Hose -(Breather Tube) -Used After Code Date 07121300
607	807385		SCREW -(Air Cleaner Brace) (M6x35mm)
607A	841233		SCREW -(Air Cleaner Brace) (M6x10mm)
643	844932		RETAINER, Air Cleaner
646	841849		BRACE, Air Cleaner
711	807385		SCREW -(Carburetor Shield)
717	841886		BRACKET, Air Cleaner
717A	842730		BRACKET, Air Cleaner
813	807376		CLAMP -(Air Cleaner Hose)
875	843118		BASE, Air Cleaner -Used After Code Date 06062200
875A	841851		BASE, Air Cleaner -Used Before Code Date 06062300
889	845918		TEE
918	844525		HOSE, Vacuum
961	807382		SCREW -(Air Cleaner Bracket)
964	590799		CAP, Connector
967	692520		FILTER, Pre Cleaner
968	841847		COVER, Air Cleaner
968A	842621		COVER, Air Cleaner
996	846006		SHIELD, Carburetor -(M8 Stud) -Used After Code Date 14012800

Not For Reproduction

Copyright © Briggs & Stratton. All Rights reserved

Mfg. No: 543477-0048-E1

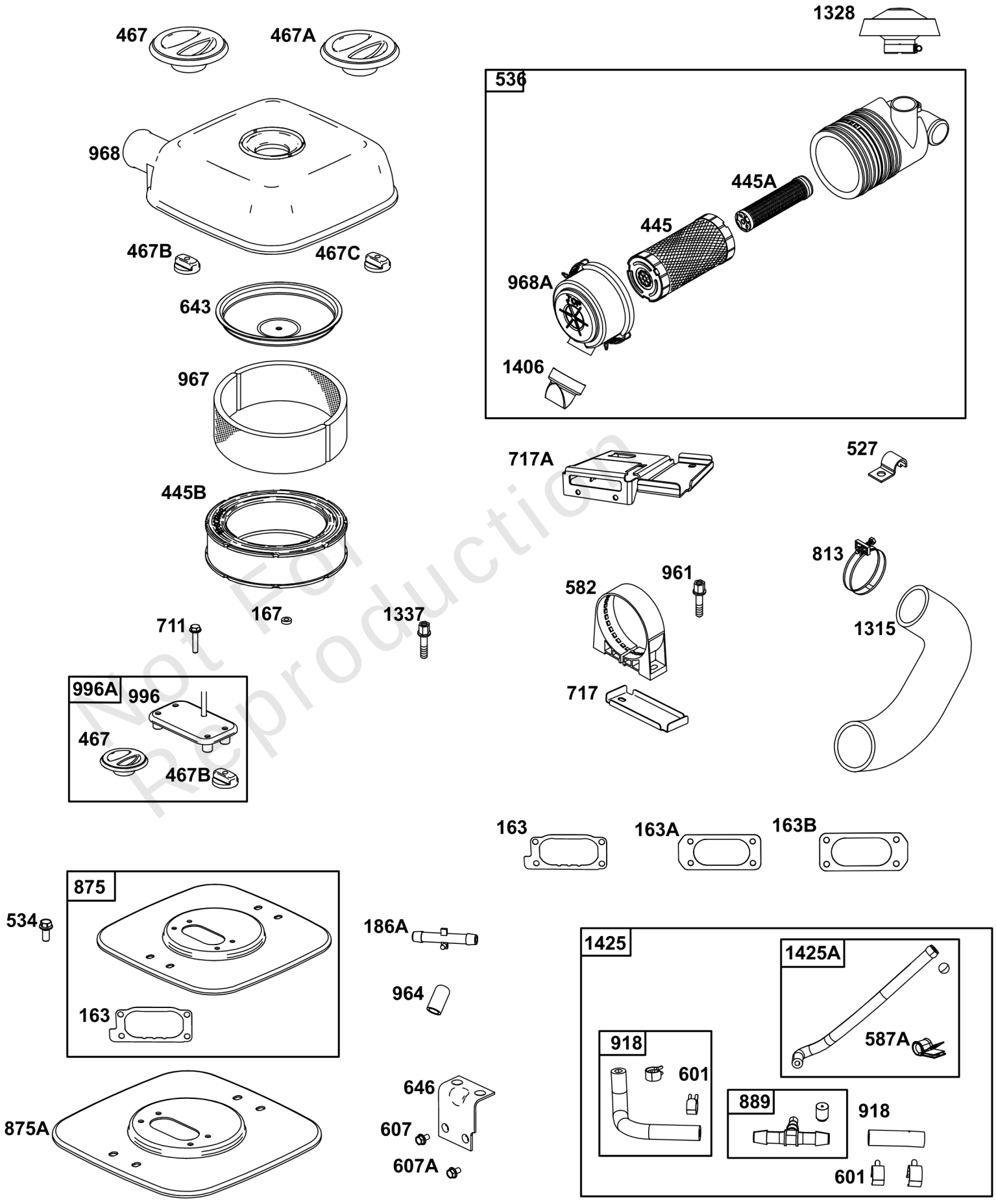

Not For Reproduction

Air Cleaners, Purge Lines

REF NO	PART NO	QTY	DESCRIPTION
996A	846013		SHIELD, Carburetor -(M8 Stud) -Used After Code Date 16062200 -Used Before Code Date 14012900
1315	809905		HOSE, Air Cleaner
1328	809907		CAP, A/C Rain
1337	807382		SCREW -(Air Cleaner Clamp)
1406	842623		VALVE, Debris
1425	845919		HOSE, Purge Line
1425A	844712		HOSE, Purge Line

Not For Reproduction

Copyright © Briggs & Stratton. All Rights reserved

Mfg. No: 543477-0048-E1

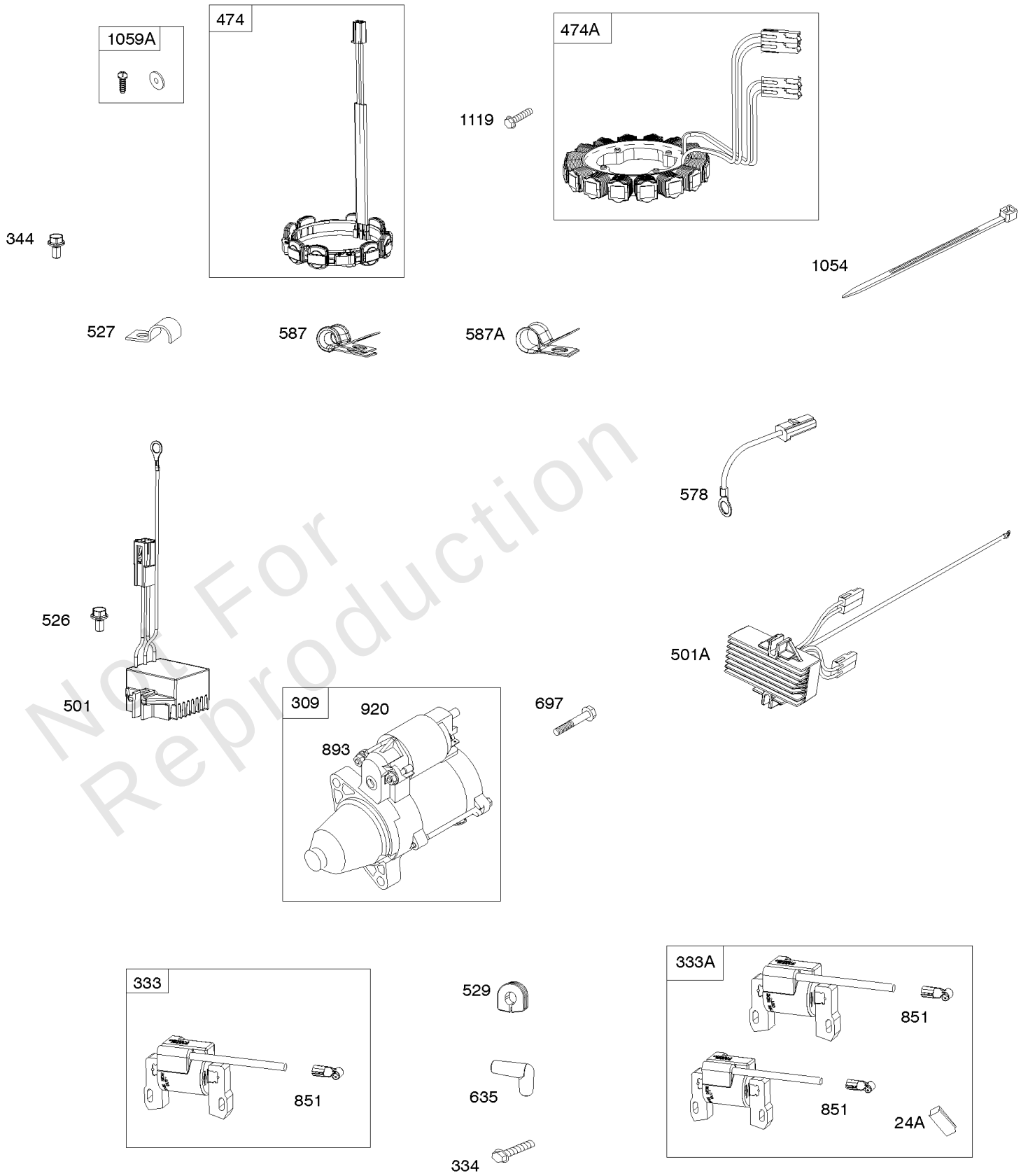

Not For Reproduction

Alternators, Electric Starter, Armatures, Regulators

REF NO	PART NO	QTY	DESCRIPTION
24A	843837		KEY, Flywheel -(Offset Key) (Aluminum) -Used Before Code Date 06111400
309	845760		MOTOR, Starter
333	845126		ARMATURE, Magneto -Used After Code Date 06111400
333A	843860		ARMATURE, Magneto -(Includes Offset Flywheel Key) -Used Before Code Date 06111500
334	692066		SCREW -(Magneto Armature) (M4x23mm)
344	841233		SCREW -(Cable Clamp) (M6x10mm)
474	846882		ALTERNATOR -(20 Amp)
474A	841178		ALTERNATOR -(20/50 Amp)
501	691573		REGULATOR -(20 Amp)
501A	841170		REGULATOR -(20/50 Amp)
526	807385		SCREW -(Regulator) (M6x35mm)
526	690717		SCREW -(Regulator) (M6x30mm)
527	690423		CLAMP, Tube
529	690744		GROMMET -(Magneto Armature Wires)
578	846899		WIRE ASSEMBLY -(Regulator to Starter Motor) (Red) -Used After Code Date 15110100
587	846866		CLAMP, Cable
587A	807116		CLAMP, Tube -(Purge Line Hose)
635	692076		BOOT, Spark Plug
697	690711		SCREW -(Starter Motor) (Drive Cap)
851	493880S		TERMINAL, Spark Plug
893	845758		NUT -(Starter Solenoid)
920	846737		SOLENOID, Starter
1054	280275		TIE, Cable
1059A	698516		KIT, Screw/Washer -(Alternator)
1119	691552		SCREW -(Alternator) (M4x30mm)

Not For Reproduction

Copyright © Briggs & Stratton. All Rights reserved

Blower Housings, Rotating Screens, Stub Shafts

Mfg. No: 543477-0048-E1

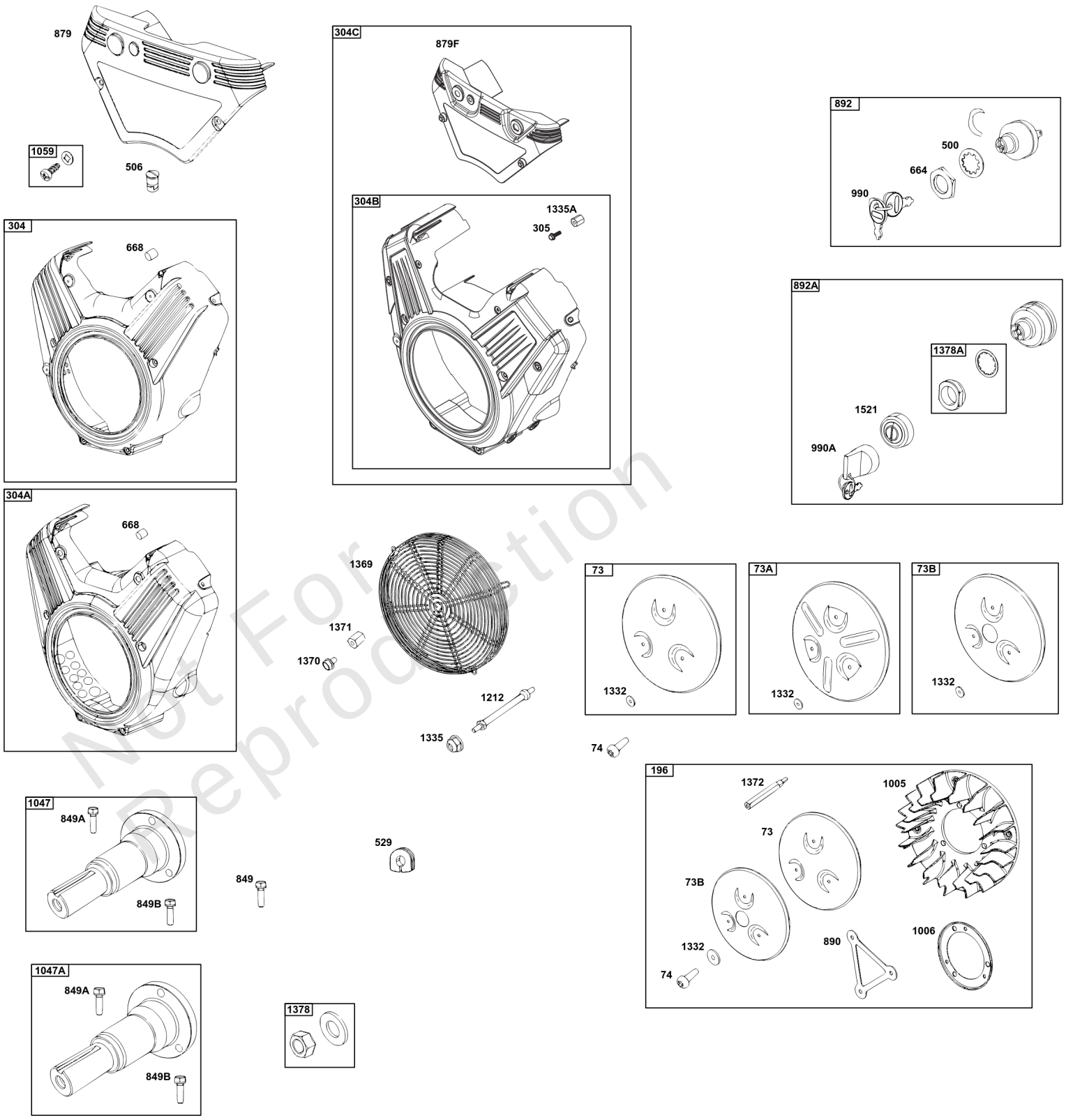

Not For Reproduction

Copyright © Briggs & Stratton. All Rights reserved

Blower Housings, Rotating Screens, Stub Shafts

REF NO	PART NO	QTY	DESCRIPTION
73	841840		SCREEN, Rotating -Used After Code Date 05010900
73A	809945		SCREEN, Rotating -Used Before Code Date 05011000
73B	842248		SCREEN, Rotating -(Stub Shaft Hole) -Used After Code Date 05010900
74	809947		SCREW -(Rotating Screen)
196	847200		GUARD, Flywheel Fan -Used Before Code Date 05011000
304	846964		HOUSING, Blower -Used Before Code Date 23122100 (No Longer Available) (See Reference 304C for Service)
304	809959		HOUSING, Blower -Used Before Code Date 23122100 (No Longer Available) (See Reference 304C for Service)
304A	846481		HOUSING, Blower -(Oil Cooler)
304B	84011459	1	HOUSING, Blower -Used After Code Date 23122000
304C	84013457	1	KIT, Blower Housing
305	807435		SCREW -(Blower Housing)
500	691086		WASHER -(Key Switch)
506	809957		SCREW -(Carburetor/EFI Cover) -Used Before Code Date 11041300
529	690744		GROMMET -(Magneto Armature Wires)
664	691087		NUT -(Key Switch)
668	841974		SPACER -(Blower Housing)
849	846236		SCREW -(Stub Shaft) (M8x34mm) -Used After Code Date 14112600
849A	691088		SCREW -(Stub Shaft) (5/16-18x1.1) -Used Before Code Date 14112700
849B	846235		SCREW -(Stub Shaft) (M8x28mm) -Used After Code Date 14112600
879	809955		COVER, Carburetor/EFI -Used Before Code Date 23122100 (No Longer Available) (See Reference 304C for Service)
879F	84011180	1	COVER, Carburetor/EFI -Used After Code Date 23122000
890	809987		BRACKET, Support
892	692318		SWITCH, Key
990	691959		SET, Key
1005	846996		FAN, Flywheel -(Used With Rotating Screen) -Used After Code Date 15080600
1006	847198		RETAINER, Fan
1059	845300		KIT, Screw/Washer -(Carburetor/EFI Cover) -Used After Code Date 11041200
1212	809958		STUD -(Blower Housing)

Not For Reproduction

Copyright © Briggs & Stratton. All Rights reserved

Blower Housings, Rotating Screens, Stub Shafts

Mfg. No: 543477-0048-E1

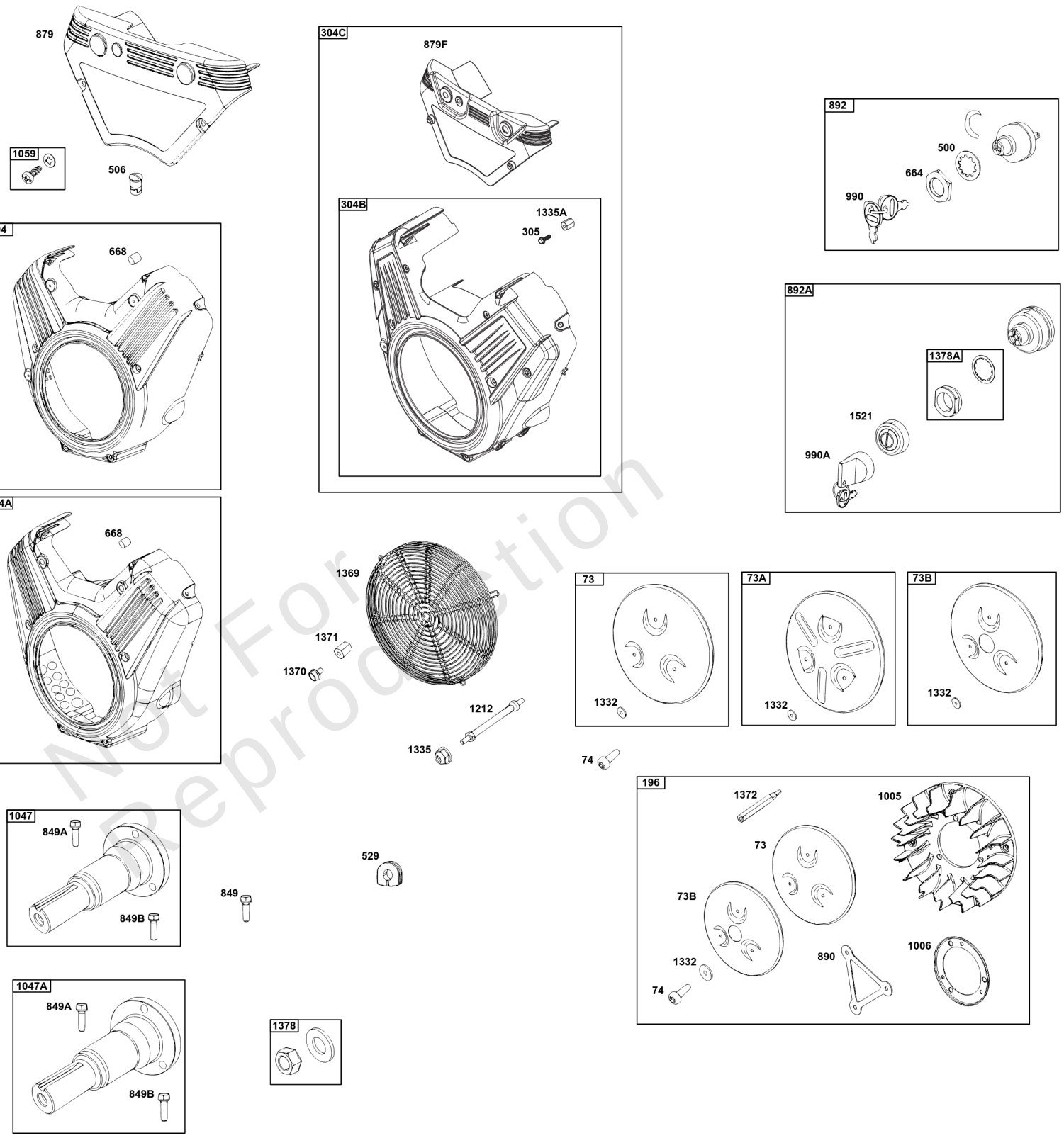

Not For Reproduction

Copyright © Briggs & Stratton. All Rights reserved

Blower Housings, Rotating Screens, Stub Shafts

REF NO	PART NO	QTY	DESCRIPTION
1332	809948		WASHER -(Rotating Screen)
1335	690939		NUT -(Blower Housing)
1335A	841537		NUT -(Blower Housing)
1369	842858		GUARD, Flywheel Fan
1370	841233		SCREW -(Flywheel Fan Guard)
1371	841537		NUT -(Flywheel Fan Guard)
1372	809946		STUD -(Rotating Screen)
1378	844795		SET, Washer/Nut -(Flywheel)

Not For Reproduction

Copyright © Briggs & Stratton. All Rights reserved

Carburetor Overhaul Kit, Engine/Valve Gasket Sets

Mfg. No: 543477-0048-E1

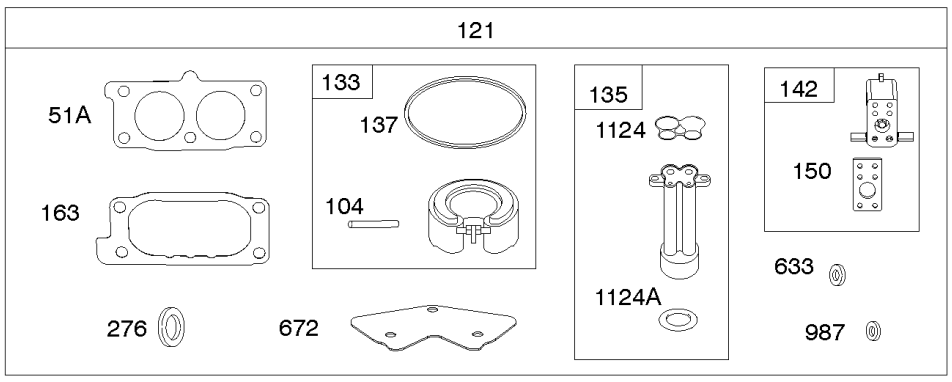

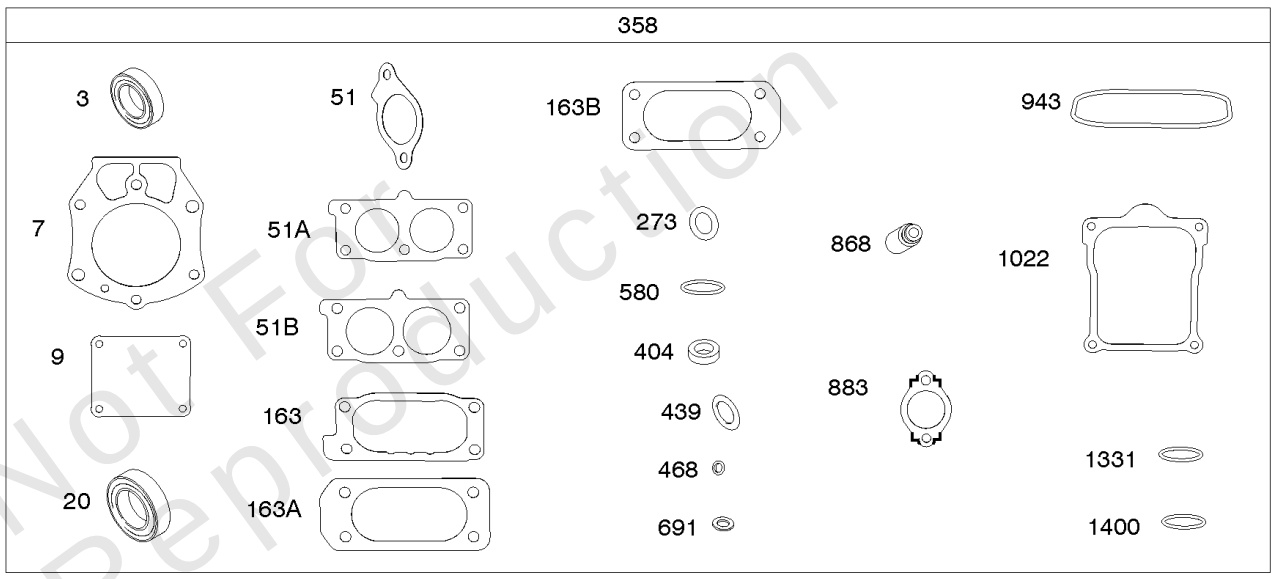

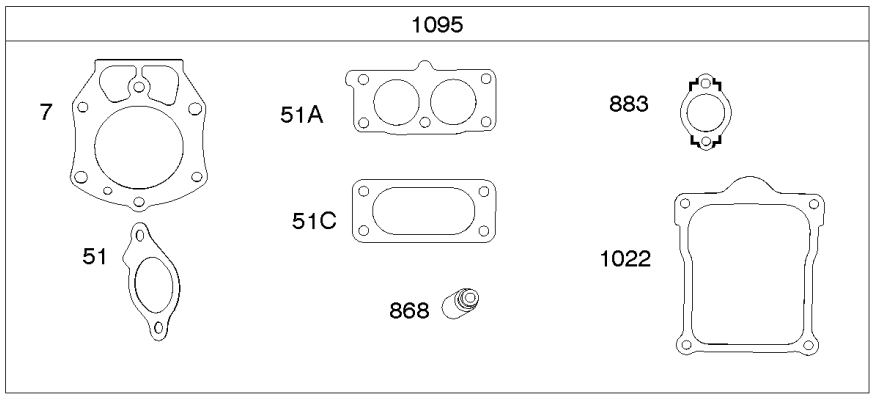

Not For Reproduction

Copyright © Briggs & Stratton. All Rights reserved

Carburetor Overhaul Kit, Engine/Valve Gasket Sets

REF NO	PART NO	QTY	DESCRIPTION
3	841596		SEAL, Oil -(Magneto Side)
7	809730		GASKET, Cylinder Head
9	842545		GASKET, Breather
20	841596		SEAL, Oil -(PTO Side)
51	841592		GASKET, Intake -Used After Code Date 04031100
51A	809910		GASKET, Intake
51C	843455		GASKET, Intake
104	690882		PIN, Float Hinge
121	841548		KIT, Carburetor Overhaul
133	841545		FLOAT, Carburetor
135	841646		TUBE, Fuel Transfer
137	841651		GASKET, Float Bowl
142	699726		NOZZLE, Carburetor -Used After Code Date 10121200
150	841649		GASKET, Nozzle
163	807375		GASKET, Air Cleaner
163A	843117		GASKET, Air Cleaner -Used After Code Date 06062200
273	690681		SEAL, O-Ring -(Oil Pump)
276	695410		WASHER, Sealing
358	841122		GASKET SET, Engine
404	809436		WASHER -(Governor Crank)
439	692154		O-RING, Oil Gallery -(Crankcase Cover/Sump or Cylinder Assembly)
468	690690		SEAL, O-Ring -(Oil Pump Screen)
580	809894		SEAL, O-Ring -(Oil Fill Cap)
633	690722		SEAL, Choke/Throttle Shaft -(Choke Shaft)
672	841655		GASKET, Carburetor Plate
691	809287		SEAL, Governor Shaft
868	691963		SEAL, Valve
883	809872		GASKET, Exhaust
943	842538		SEAL, O-Ring -(Oil Pump Cover)
987	808183		SEAL, Choke/Throttle Shaft
1022	809732		GASKET, Rocker Cover
1095	843713		GASKET SET, Valve
1124	841647		SEAL, O-Ring -(Fuel Transfer Tube)
1124A	841653		SEAL, O-Ring -(Fuel Transfer Tube)
1331	809894		SEAL, O-Ring -(Fuel Pump)
1400	809894		SEAL, O-Ring -(Fuel Pump Cover)

Not For Reproduction

Copyright © Briggs & Stratton. All Rights reserved

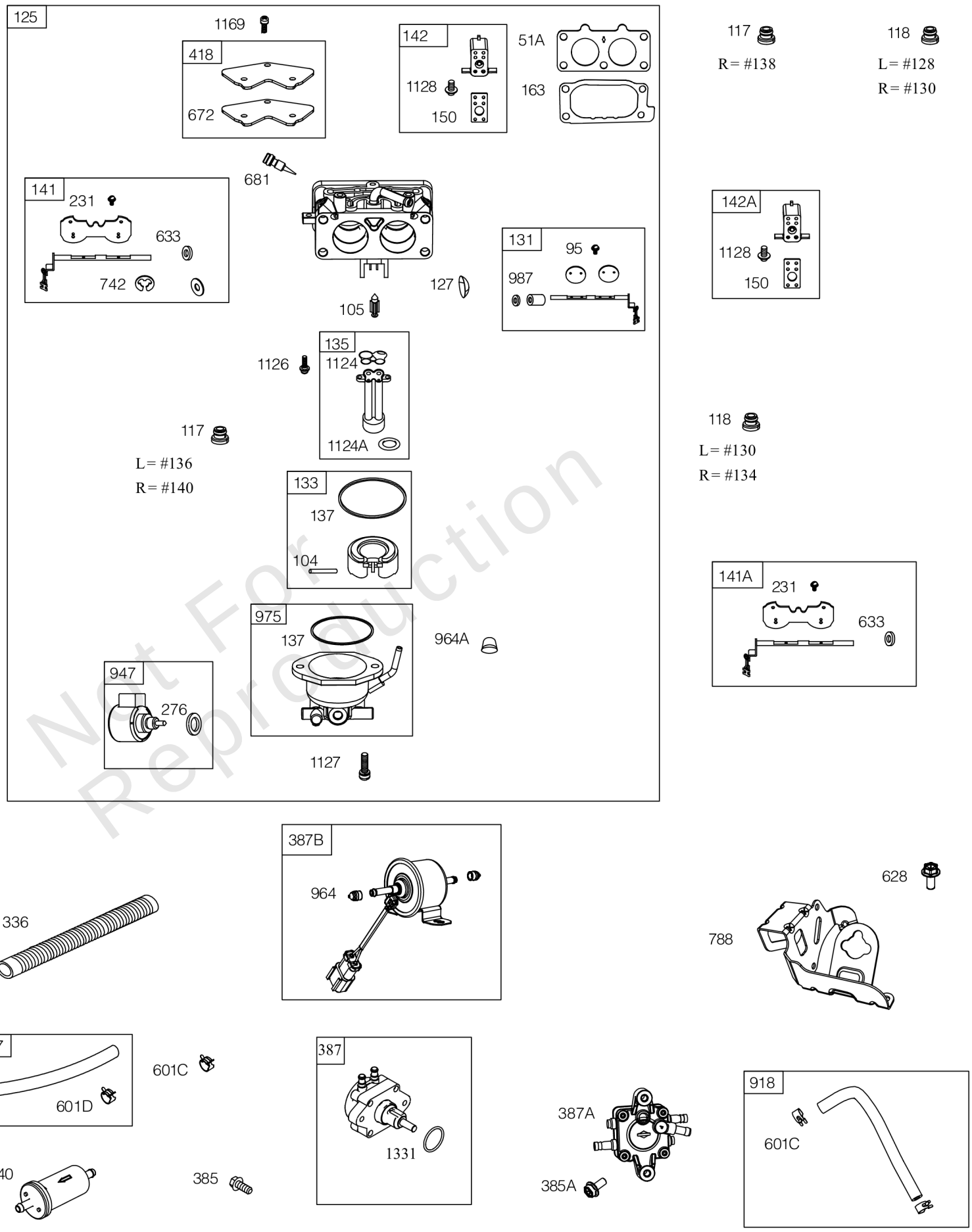

Not For Reproduction

REF NO	PART NO	QTY	DESCRIPTION
51A	809910		GASKET, Intake
95	690718		SCREW -(Throttle Valve)
104	690882		PIN, Float Hinge
105	698537		VALVE, Float Needle
117	845289		JET, Main -(Standard) (Right Jet) (#140)
117	842633		JET, Main -(Standard) (Left Jet) (#136)
117	842634		JET, Main -(Standard) (Right Jet) (#138) -Used Before Code Date 10121200
118	842012		JET, Main -(High Altitude) (Right Jet) (#134)
118	842139		JET, Main -(High Altitude) (Left Jet) (#128) -Used Before Code Date 10121200
118	842629		JET, Main -(High Altitude) (Right Jet) (#130)
118	842629		JET, Main -(High Altitude) (Right Jet) (#130) -Used Before Code Date 10121200
125	845274		CARBURETOR
127	844590		PLUG, Welch
131	841551		KIT, Throttle Shaft
133	841545		FLOAT, Carburetor
135	841646		TUBE, Fuel Transfer
137	841651		GASKET, Float Bowl
141	844733		KIT, Choke Shaft -Used After Code Date 10043000
141A	841549		KIT, Choke Shaft -Used Before Code Date 10050100
142	699726		NOZZLE, Carburetor -Used After Code Date 10121200
142A	841648		NOZZLE, Carburetor
150	841649		GASKET, Nozzle
163	807375		GASKET, Air Cleaner
187	791745		LINE, Fuel -(23 Inches)(Cut To Required Length)
187	791766		LINE, Fuel -(15 Inches Long)(Cut to Required Length)
187	841589		LINE, Fuel -(35 Inches)(Cut To Required Length)
231	690718		SCREW -(Choke Valve)
240	845125		FILTER, Fuel
276	695410		WASHER, Sealing
385	809876		SCREW -(Fuel Pump) (M5x22mm)
385A	807084		SCREW -(Fuel Pump) (M6x14mm)
387	844086		PUMP, Fuel
387A	844527		PUMP, Fuel
418	843346		PLATE, Carburetor Cover
601C	691038		CLAMP, Hose -(Black)
601D	791850		CLAMP, Hose -(Green)

Not For Reproduction

Copyright © Briggs & Stratton. All Rights reserved

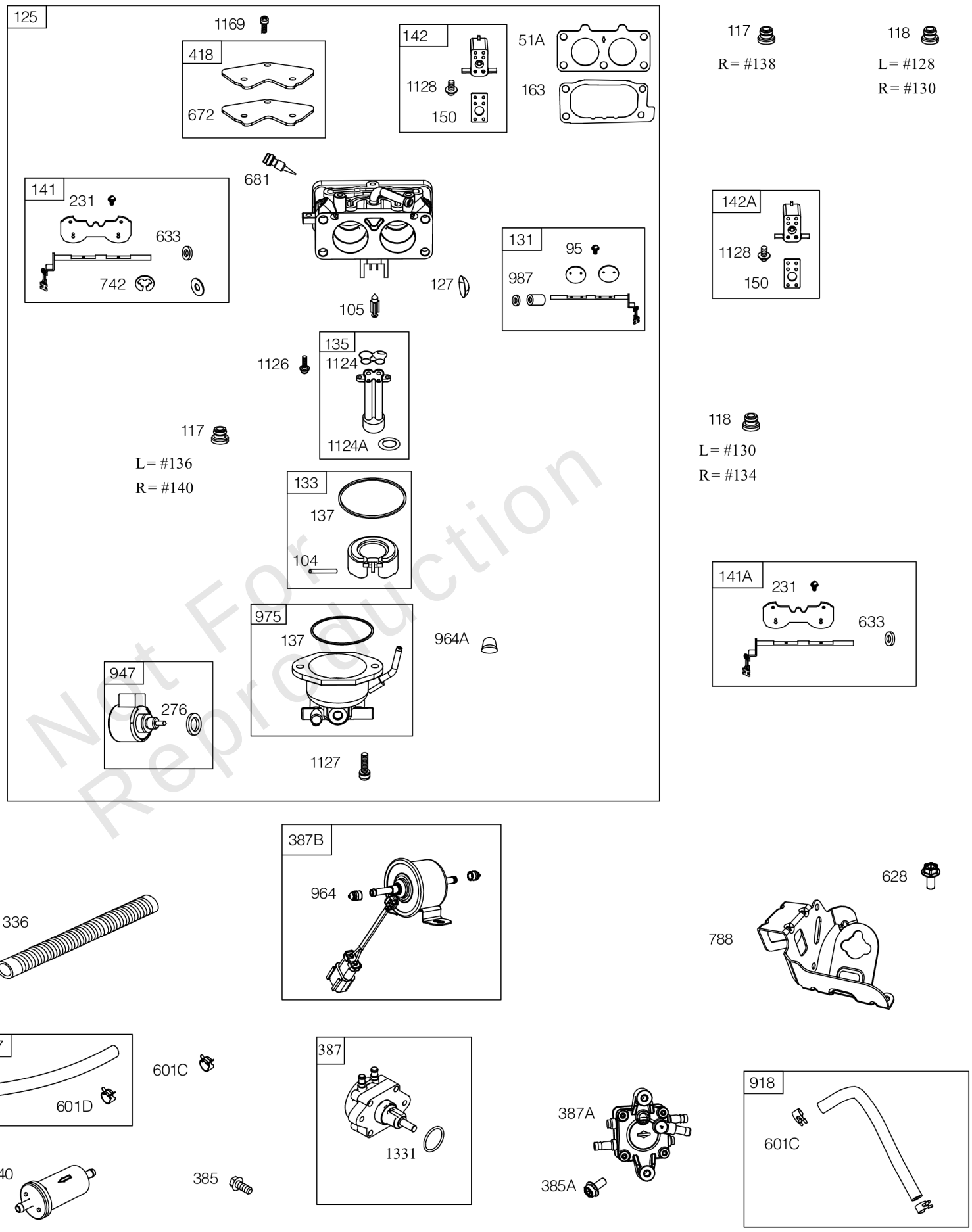

Not For Reproduction

Carburetor, Fuel Pumps

REF NO	PART NO	QTY	DESCRIPTION
633	690722		SEAL, Choke/Throttle Shaft -(Choke Shaft)
672	841655		GASKET, Carburetor Plate
681	845290		KIT, Needle Valve
742	807001		RETAINER, E Ring -(Choke Shaft)
918	844525		HOSE, Vacuum
947	841546		SOLENOID, Fuel
964	590799		CAP, Connector
964A	807468		CAP, Carburetor -(Carburetor)
975	841650		BOWL, Float
987	808183		SEAL, Choke/Throttle Shaft
1124	841647		SEAL, O-Ring -(Fuel Transfer Tube)
1124A	841653		SEAL, O-Ring -(Fuel Transfer Tube)
1126	841619		SCREW -(Fuel Transfer Tube)
1127	841621		SCREW -(Float Bowl to Carburetor Body)
1128	690990		SCREW -(Carburetor Nozzle)
1169	690990		SCREW -(Carburetor Cover Plate)
1331	809894		SEAL, O-Ring -(Fuel Pump)
1336	841015		SHIELD, Wire Protective

Not For Reproduction

Copyright © Briggs & Stratton. All Rights reserved

Control Brackets, Links, Springs

Mfg. No: 543477-0048-E1

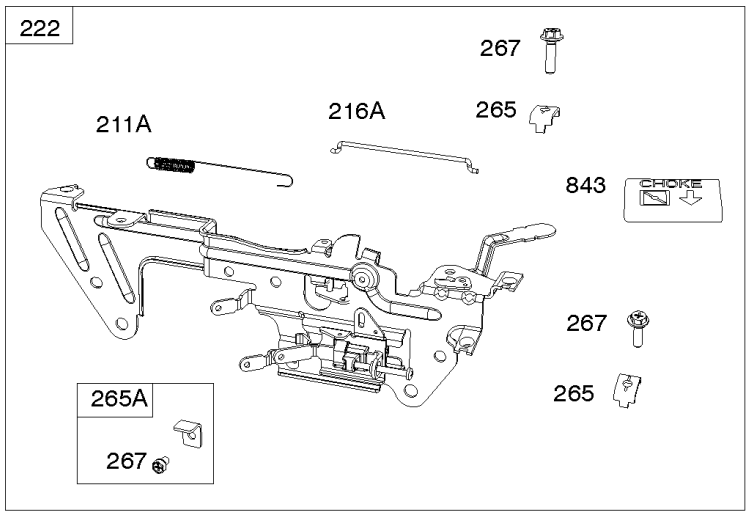

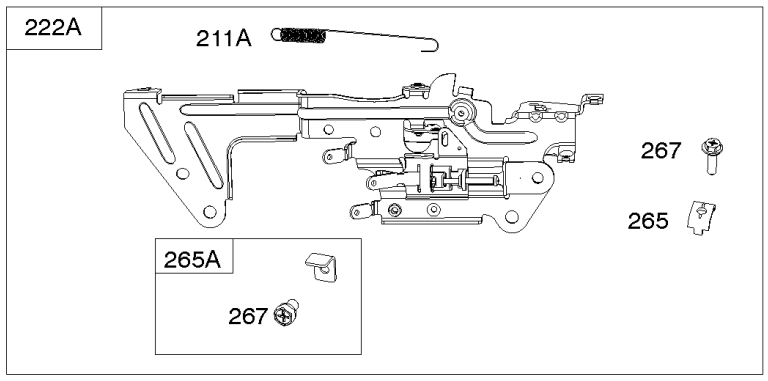

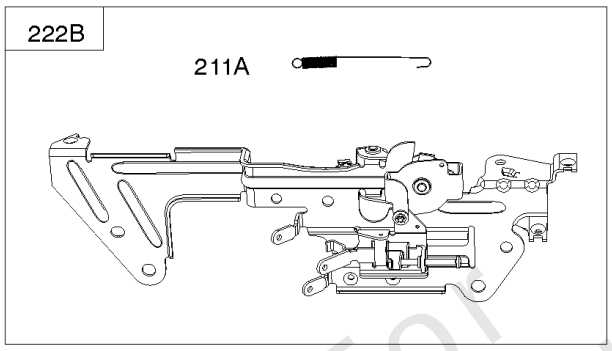

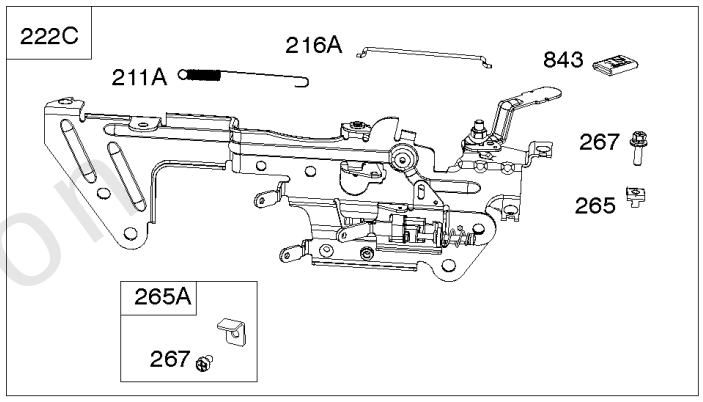

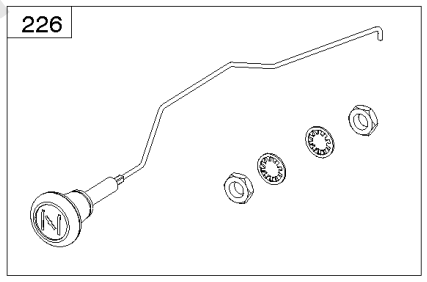

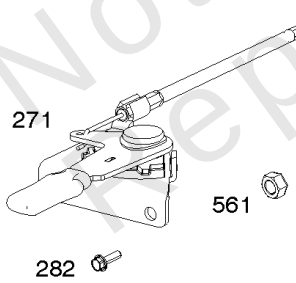

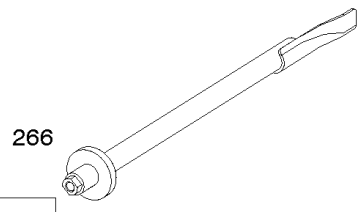

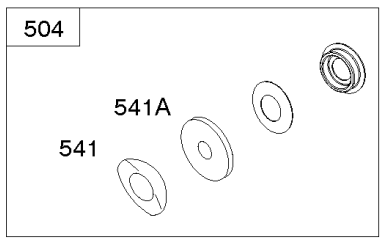

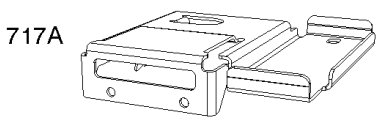

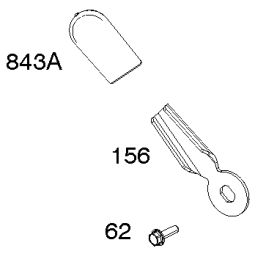

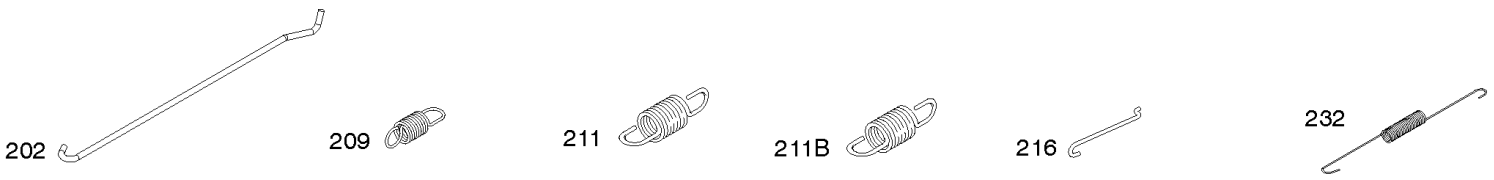

Not For Reproduction

Control Brackets, Links, Springs

REF NO	PART NO	QTY	DESCRIPTION
62	841233		SCREW -(Speed Adjustor Lever) (M6x10mm)
156	841522		LEVER, Control
188	841233		SCREW -(Control Bracket) (M6x10mm)
188A	692062		SCREW -(Control Bracket) (M6x18mm)
202	841322		LINK, Mechanical Governor
209	841012		SPRING, Governor -(Yellow)
211	809875		SPRING, Governed Idle -(White)
211A	690707		SPRING, Governed Idle -(Control Bracket) (White)
216	809788		LINK, Choke
216A	841671		LINK, Choke -(Control Bracket)
222	841492		BRACKET, Control
222A	841528		BRACKET, Control
222B	841527		BRACKET, Control
226	841613		ROD, Choke
232	690545		SPRING/LINK, Governor
265	691024		CLAMP, Casing
265A	841673		CLAMP, Casing
266	841521		CONTROL, Throttle
267	841552		SCREW -(Casing Clamp) (M5x20mm)
271	692541		LEVER, Control
282	841552		SCREW -(Control Lever) (M5x20mm)
504	846156		WASHER -(Throttle Control)
541	841526		WASHER -(Speed Adjuster Lever) (Wave Washer)
541A	841525		WASHER -(Speed Adjuster Lever) (Flat Washer)
561	690713		NUT -(Control Lever)
717A	842730		BRACKET, Air Cleaner
843	809672		SLEEVE, Lever -(Control Bracket)
843A	842745		SLEEVE, Lever -(Speed Adjuster Lever)

Not For Reproduction

Copyright © Briggs & Stratton. All Rights reserved

Crankcase Covers, Camshaft

Mfg. No: 543477-0048-E1

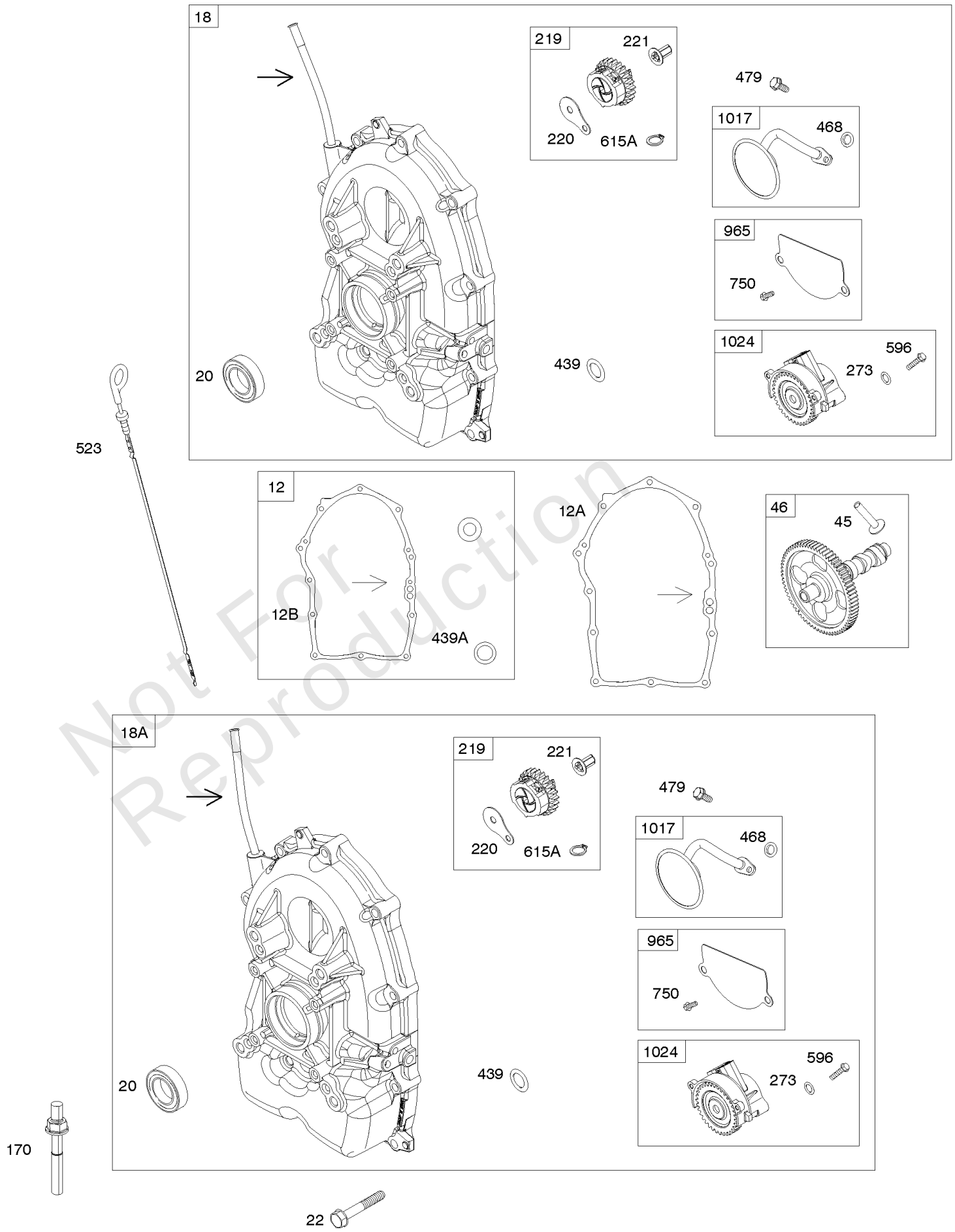

Not For Reproduction

Crankcase Covers, Camshaft

REF NO	PART NO	QTY	DESCRIPTION
12	846037		GASKET, Crankcase -Used After Code Date 13072100
12A	844107		GASKET, Crankcase -Used Before Code Date 13072200
12B	843969		GASKET, Crankcase -Used After Code Date 13072100
18	844792		COVER, Crankcase
20	841596		SEAL, Oil -(PTO Side)
22	807362		SCREW -(Crankcase Cover/Sump) (M8x50mm)
45	809785		TAPPET, Valve
46	809879		CAMSHAFT
219	809426		GEAR, Governor
220	841608		WASHER -(Governor Gear)
221	841026		CUP, Governor
273	690681		SEAL, O-Ring -(Oil Pump)
439	692154		O-RING, Oil Gallery -(Crankcase Cover/Sump or Cylinder Assembly)
439A	846027		O-RING, Oil Gallery -(Crankcase Cover/Sump or Cylinder Assembly) -Used After Code Date 13072100
468	690690		SEAL, O-Ring -(Oil Pump Screen)
479	807084		SCREW -(Oil Pump Screen)
523	841007		DIPSTICK
596	691492		SCREW -(Oil Pump)
615A	698290		RETAINER, Governor Shaft -(Crankcase Cover/Sump)
750	841233		SCREW -(Oil Pump Cover)
965	809422		COVER, Oil Pump
1017	809421		SCREEN, Oil Pump
1024	845983		PUMP, Oil

Not For Reproduction

Copyright © Briggs & Stratton. All Rights reserved

Cylinder Heads, Rocker Covers

Mfg. No: 543477-0048-E1

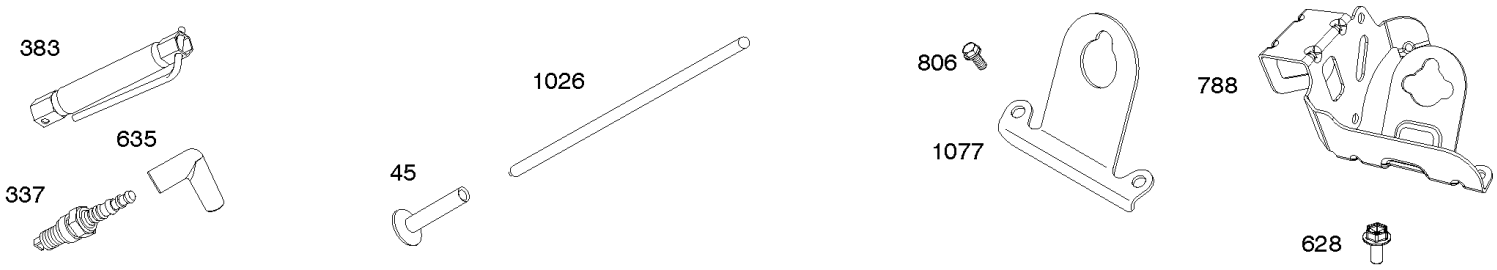

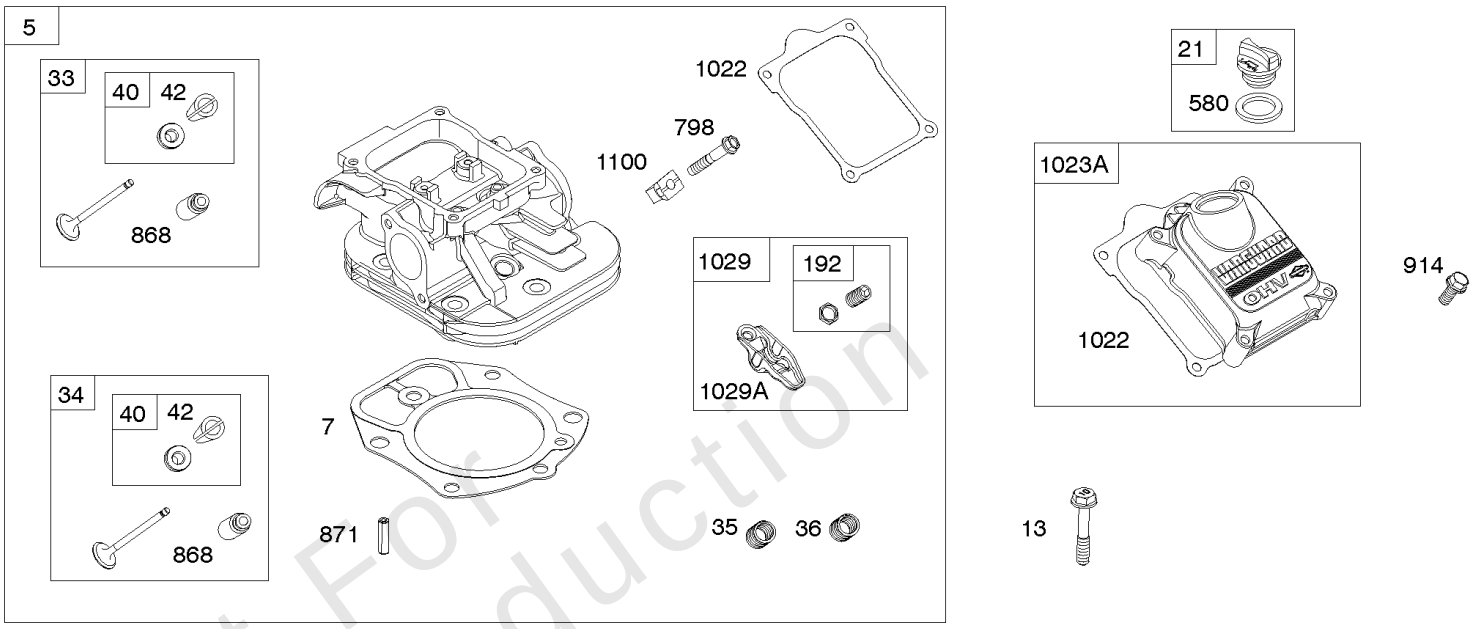

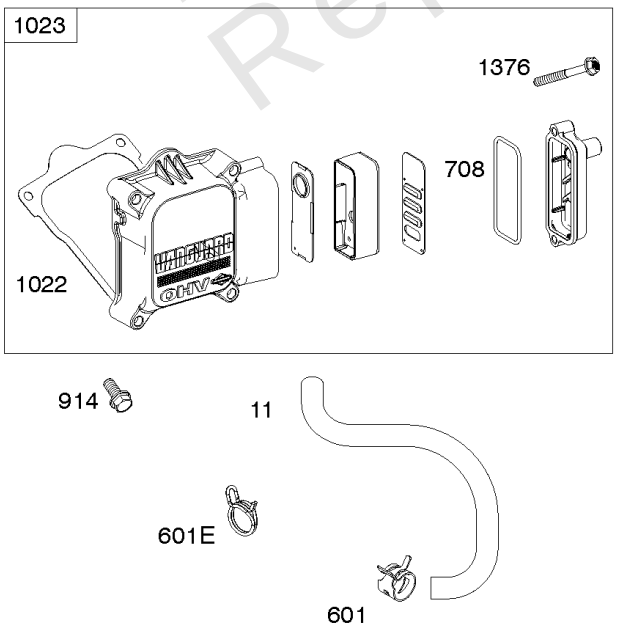

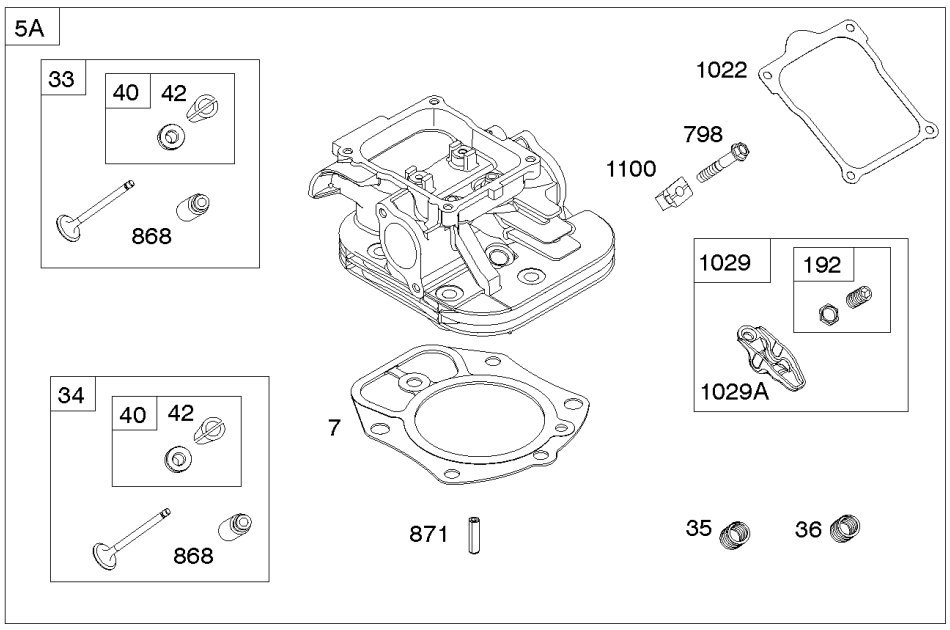

Not For Reproduction

Cylinder Heads, Rocker Covers

REF NO	PART NO	QTY	DESCRIPTION
5	845588		HEAD, Cylinder -(Cylinder 1)
5A	845590		HEAD, Cylinder -(Cylinder 2)
7	809730		GASKET, Cylinder Head
11	809736		TUBE, Breather
13	809784		SCREW -(Cylinder Head) (M9x70mm)
21	843464		CAP, Oil Fill
33	844787		VALVE, Exhaust
34	843730		VALVE, Intake
35	845589		SPRING, Valve -(Intake) (Intake) (Pink)
35A	809374		SPRING, Valve -(Intake) (Intake) (White)
36	845589		SPRING, Valve -(Exhaust) (Exhaust) (Pink)
36A	809374		SPRING, Valve -(Exhaust) (Exhaust) (White)
40	844788		RETAINER, Valve
42	807683		KEEPER, Valve
45	809785		TAPPET, Valve
192	690083		ADJUSTER. Rocker Arm
337	491055S		PLUG, Spark -(RC12YC - RESISTOR)
337	792015		PLUG, Spark -(XC92YC - RESISTOR - EMS)
337	84007216	2	PLUG, Spark -(China Only)
383	19576S		WRENCH, Spark Plug
580	809894		SEAL, O-Ring -(Oil Fill Cap)
601	844405		CLAMP, Hose -(Breather Tube) -Used After Code Date 07121300
601E	841499		CLAMP, Hose -(Breather Tube) -Used Before Code Date 07121400
635	692076		BOOT, Spark Plug
708	841301		SEAL, O-Ring -(Breather Reed)
798	691492		SCREW -(Rocker Arm) (M6x18mm)
806	807357		SCREW -(Lifting Bracket) (M6x40mm)
868	691963		SEAL, Valve
871	692057		BUSHING, Valve Guide
914	807357		SCREW -(Rocker Cover)
1022	809732		GASKET, Rocker Cover
1023	809789		COVER, Rocker -(Rocker Cover #2)
1023A	809731		COVER, Rocker -(Rocker Cover #1)
1026	809783		ROD, Push -(Intake and Exhaust)
1029	690972		ARM, Rocker
1029A	807323		ARM, Rocker

Not For Reproduction

Copyright © Briggs & Stratton. All Rights reserved

Cylinder Heads, Rocker Covers

Mfg. No: 543477-0048-E1

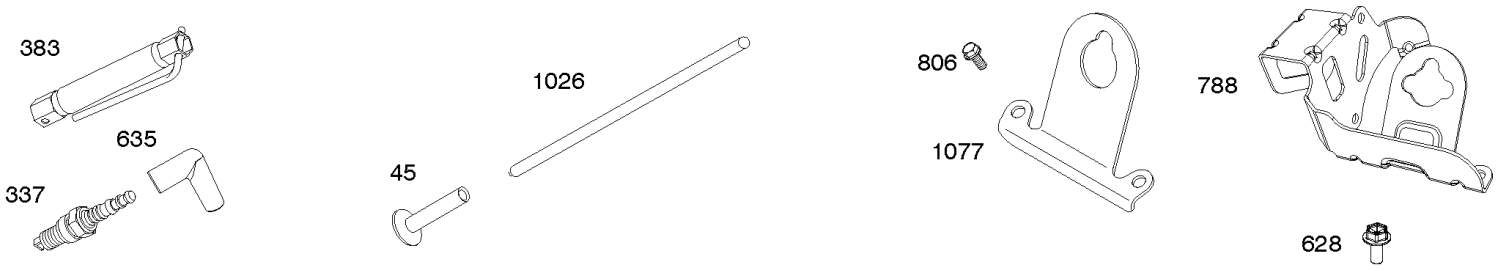

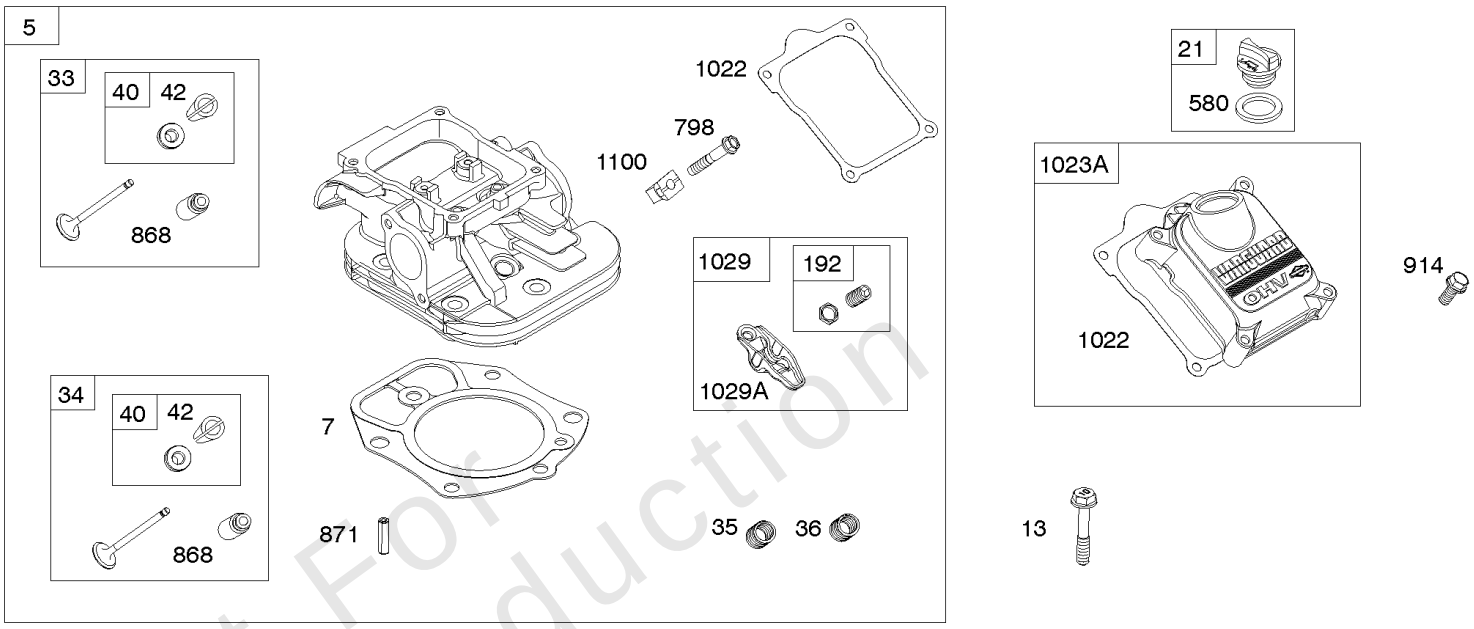

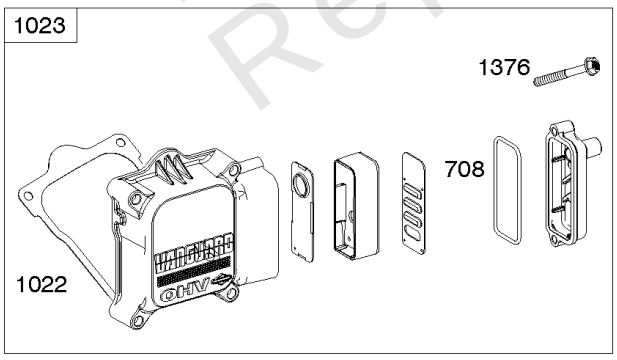

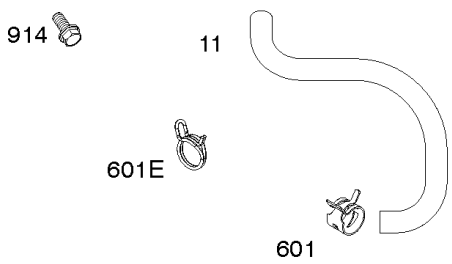

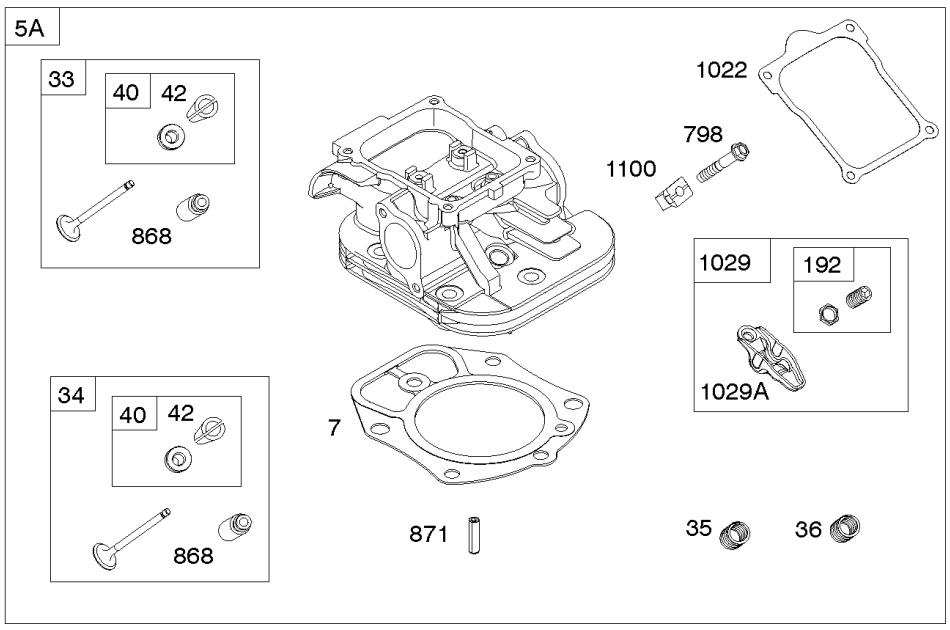

Not For Reproduction

REF NO	PART NO	QTY	DESCRIPTION
1077	809729		BRACKET, Lifting
1100	791959		PIVOT, Rocker Arm
1376	806421		SCREW -(Breather Reed Cover)

Not For Reproduction

Copyright © Briggs & Stratton. All Rights reserved

Mfg. No: 543477-0048-E1

1036

1319

1330

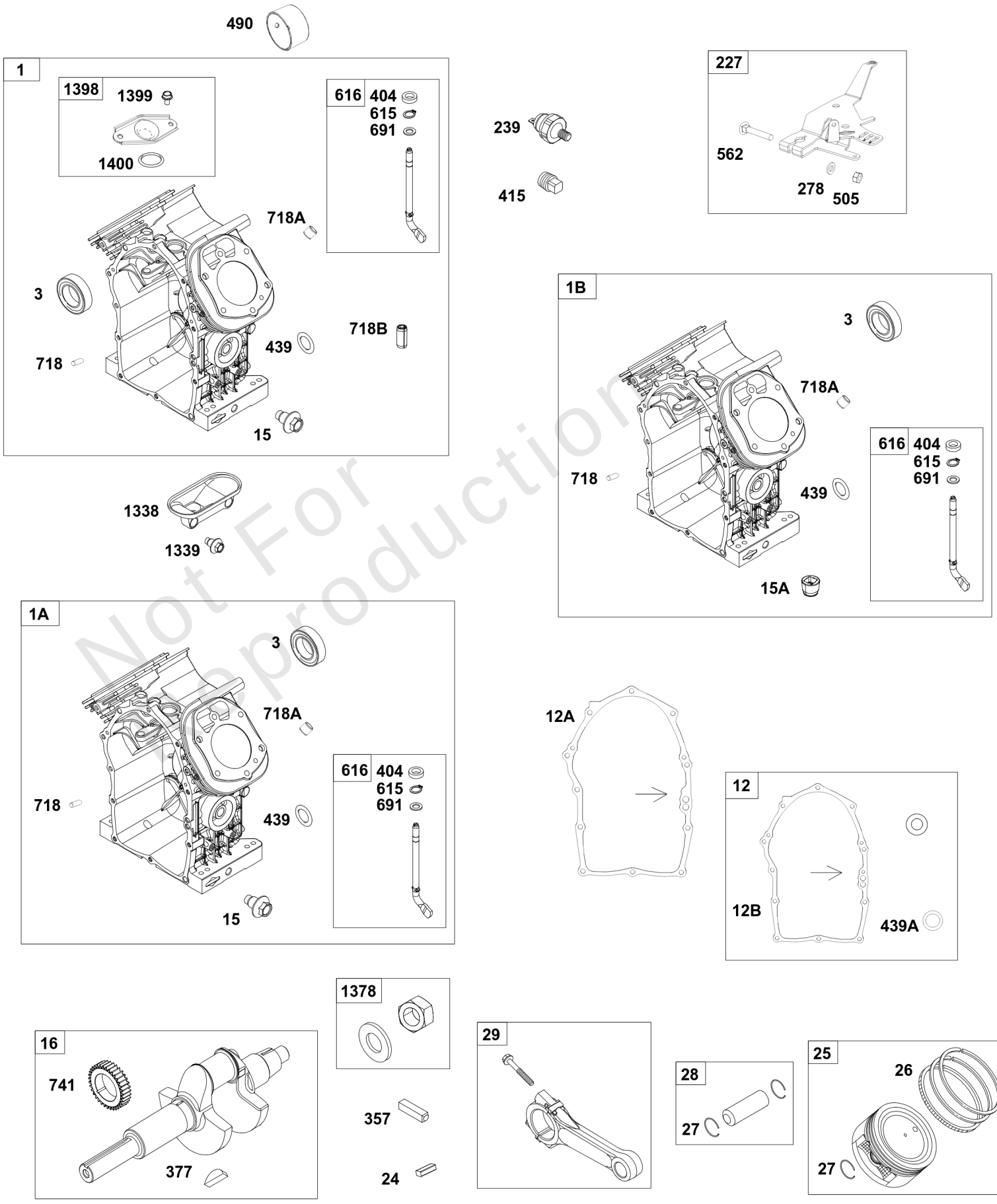

Not For Reproduction

Copyright © Briggs & Stratton. All Rights reserved

Cylinders, Piston/Rings/Rod, Crankshaft

REF NO	PART NO	QTY	DESCRIPTION
1	845756		CYLINDER ASSEMBLY
3	841596		SEAL, Oil -(Magneto Side)
12	846037		GASKET, Crankcase -Used After Code Date 13072100
12A	844107		GASKET, Crankcase -Used Before Code Date 13072200
12B	843969		GASKET, Crankcase -Used After Code Date 13072100
15	807392		PLUG, Oil Drain
16	843290		CRANKSHAFT
24	796335		KEY, Flywheel -(Steel) -Used After Code Date 07122700
24	222698S		KEY, Flywheel -(Aluminum) -Used Before Code Date 07122800
25	809790		PISTON ASSEMBLY -(Standard)
25	841931		PISTON ASSEMBLY -(.020 Oversize)
26	809972		SET, Ring -(Standard)
27	807351		LOCK, Piston Pin
28	807361		PIN, Piston
29	809275		ROD, Connecting
227	809984		LEVER, Governor Control
239	841281		SWITCH, Oil Pressure
278	842122		WASHER -(Governor Control Lever)
377	691639		KEY, Woodruff
404	809436		WASHER -(Governor Crank)
415	794903		PLUG
439	692154		O-RING, Oil Gallery -(Crankcase Cover/Sump or Cylinder Assembly)
439A	846027		O-RING, Oil Gallery -(Crankcase Cover/Sump or Cylinder Assembly) -Used After Code Date 13072100
490	843433		BEARING, Magneto Side
505	844752		NUT -(Governor Control Lever)
562	843344		BOLT -(Governor Lever)
615	809533		RETAINER, Governor Shaft -(Cylinder)
616	844180		CRANK, Governor
691	809287		SEAL, Governor Shaft
718	690959		PIN, Locating -(Cylinder)
718A	809508		PIN, Locating -(Cylinder Head)
718B	845925		PIN, Locating -(Cylinder) (Spiral)
741	809432		GEAR, Timing
1036	-----		Label-Emissions -(Available From A Briggs & Stratton Authorized Dealer)
1319	794467		LABEL, Warning

Not For Reproduction

Copyright © Briggs & Stratton. All Rights reserved

Cylinders, Piston/Rings/Rod, Crankshaft

Mfg. No: 543477-0048-E1

1036

1319

1330

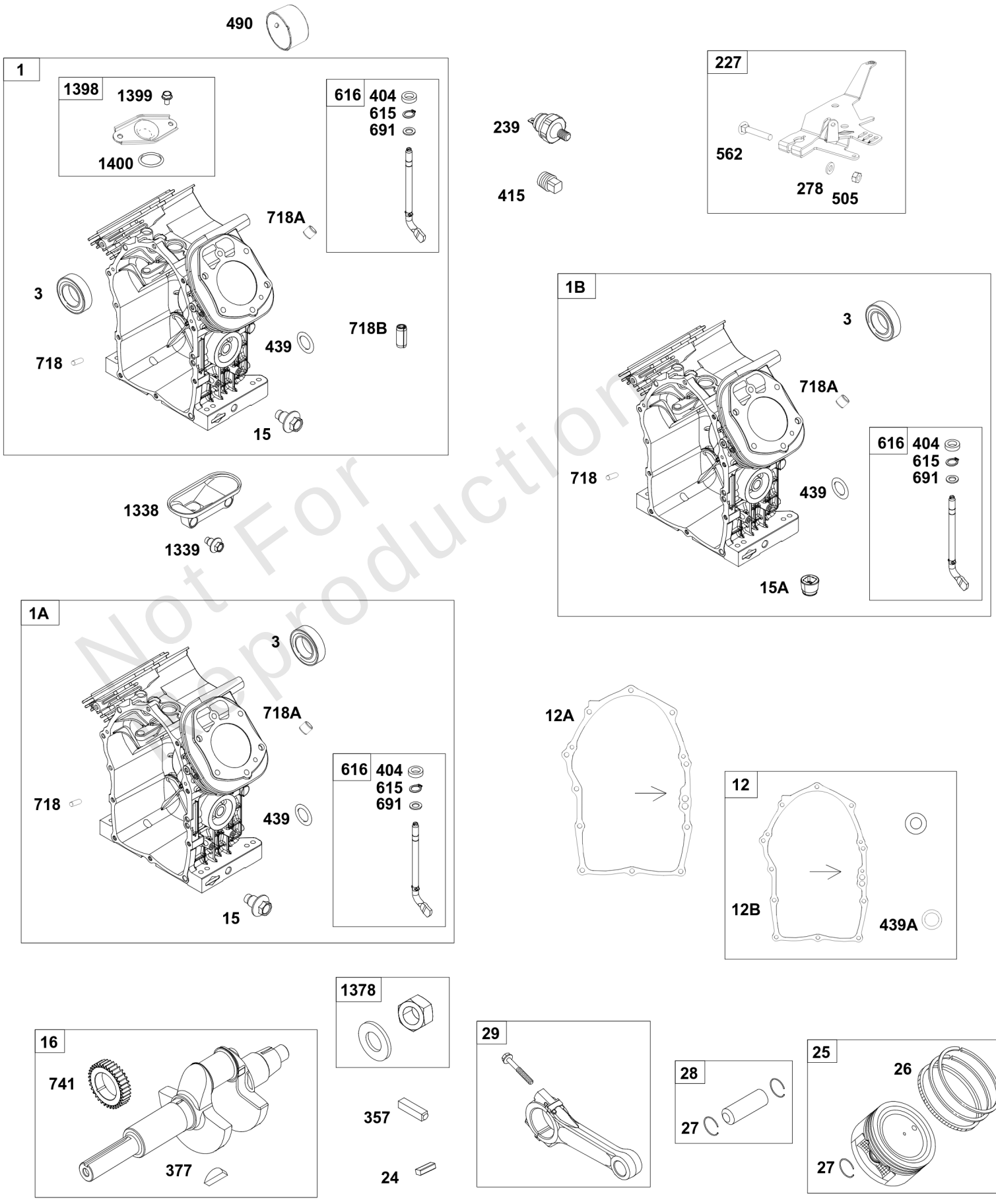

Not For Reproduction

REF NO	PART NO	QTY	DESCRIPTION
1330	272144		MANUAL, Repair
1338	809334		TRAY, Oil Drip
1339	807435		SCREW -(Oil Drip Tray)
1378	844795		SET, Washer/Nut -(Flywheel)
1398	842191		COVER, Fuel Pump
1399	690932		SCREW -(Fuel Pump Cover)
1400	809894		SEAL, O-Ring -(Fuel Pump Cover)

Not For Reproduction

Copyright © Briggs & Stratton. All Rights reserved

Flywheels, Air Guides, Speed Sensor

Mfg. No: 543477-0048-E1

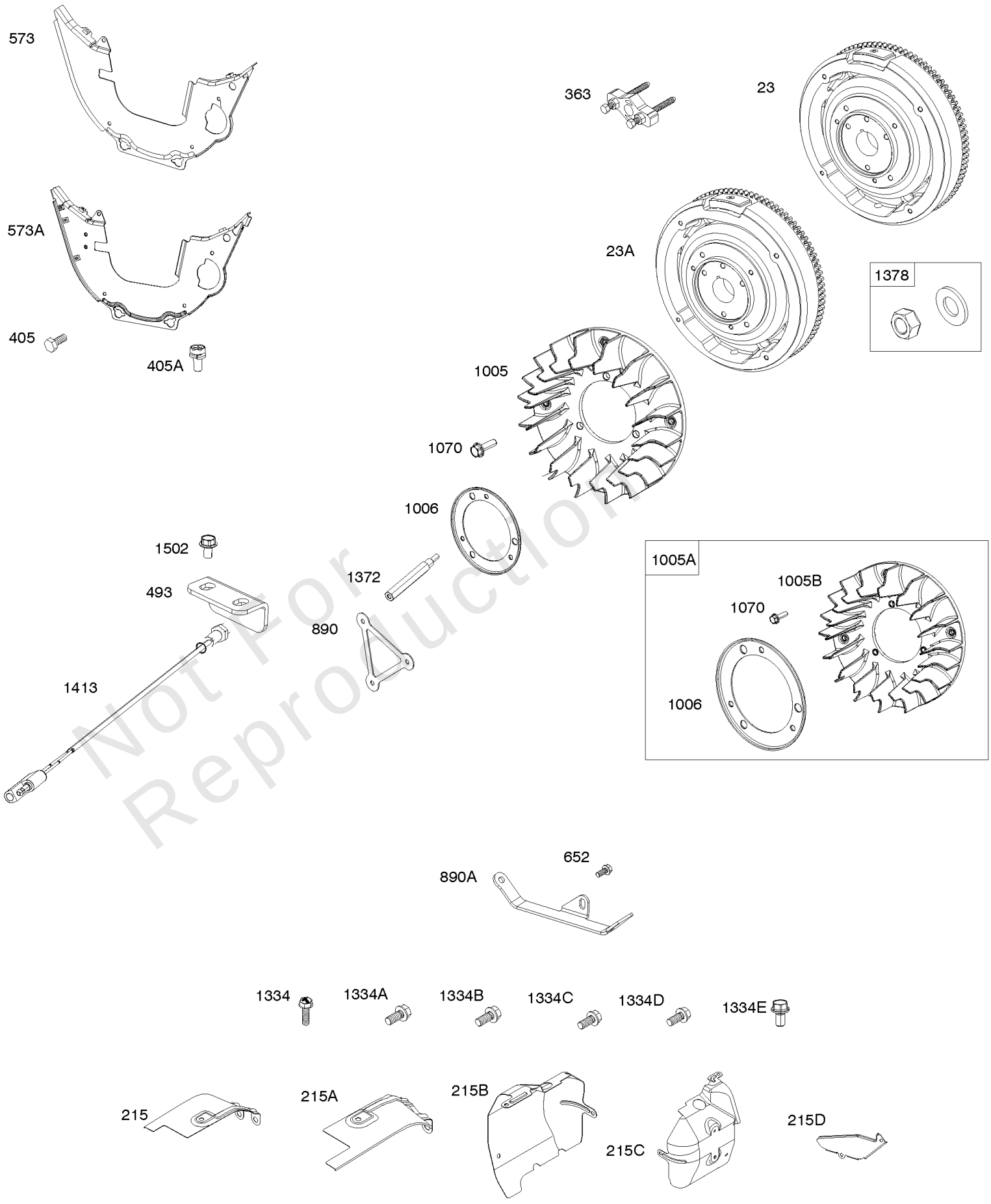

Not For Reproduction

Flywheels, Air Guides, Speed Sensor

REF NO	PART NO	QTY	DESCRIPTION
23	844385		FLYWHEEL
215	809728		GUIDE, Air -(Cylinder 1)
215A	809737		GUIDE, Air -(Cylinder 2)
215C	809738		GUIDE, Air -(Cylinder #1)
215D	809739		GUIDE, Air -(Valley)
215B	809897		GUIDE, Air -(Cylinder #2)
363	19203		PULLER, Flywheel
405	841233		SCREW -(Back Plate) (M6x10mm)
405A	841735		SCREW -(Back Plate) (M6x14mm) -Used After Code Date 14121500
493	842713		BRACKET, Mounting
573A	842712		PLATE, Back -(With Weld Nuts)
652	807084		SCREW -(Support Bracket)
890	809987		BRACKET, Support
890A	841614		BRACKET, Support
1005	846996		FAN, Flywheel -(Used With Rotating Screen) -Used After Code Date 15080600
1005A	847199		FAN, Flywheel -Used Before Code Date 15080700
1006	847198		RETAINER, Fan
1070	807435		SCREW -(Flywheel Fan) (M6x20mm)
1334	807435		SCREW -(Air Guide) (M4x20mm)
1334A	841233		SCREW -(Air Guide) (M6x10mm)
1334B	692062		SCREW -(Air Guide) (M8x18mm)
1334D	807084		SCREW -(Air Guide) (M4x14mm)
1334C	690677		SCREW -(Air Guide) (M4x12mm)
1334E	692056		SCREW -(Air Guide) (M8x14mm)
1372	809946		STUD -(Rotating Screen)
1378	844795		SET, Washer/Nut -(Flywheel)

Not For Reproduction

Copyright © Briggs & Stratton. All Rights reserved

Intake Manifold, Intake Elbows, Gaskets

Mfg. No: 543477-0048-E1

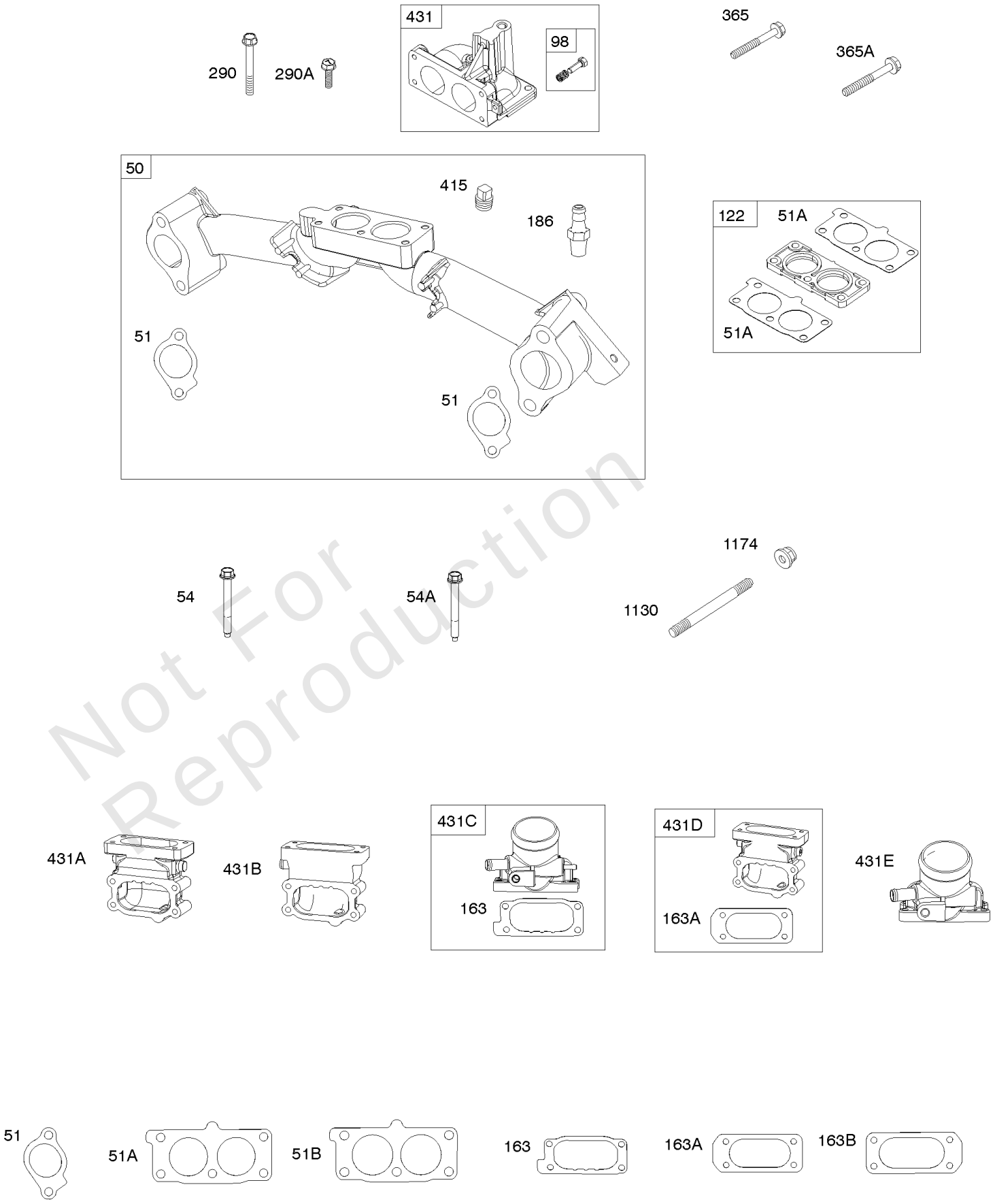

Not For Reproduction

Intake Manifold, Intake Elbows, Gaskets

REF NO	PART NO	QTY	DESCRIPTION
50	844340		MANIFOLD, Intake -Used After Code Date 08123100
51	841592		GASKET, Intake -Used After Code Date 04031100
51A	809910		GASKET, Intake
54	844656		SCREW -(Intake Manifold) (M8x72mm) -Used After Code Date 09073100
54A	691537		SCREW -(Intake Manifold) (M6x70mm) -Used Before Code Date 04031200
98	841842		KIT, Idle Speed -(Intake Elbow)
122	846245		SPACER, Carburetor
163	807375		GASKET, Air Cleaner
163A	843117		GASKET, Air Cleaner -Used After Code Date 06062200
186	844568		CONNECTOR, Hose -(Intake Manifold)
290	809911		SCREW -(Intake Elbow) (M6x55mm)
290A	807421		SCREW -(Intake Elbow) (M6x25mm)
365	807437		SCREW -(Carburetor/Throttle Body) (M6x85mm)
365A	841853		SCREW -(Carburetor/Throttle Body) (M6x103mm)
415	794903		PLUG
431	841539		ELBOW, Intake
431A	843116		ELBOW, Intake -Used After Code Date 06062200
431E	809896		ELBOW, Intake
431C	845920		ELBOW, Intake
1130	841590		STUD -(Intake Manifold) -Used After Code Date 04031100 -Used Before Code Date 10093000
1174	842067		NUT -(Intake Manifold) -Used After Code Date 04031100 -Used Before Code Date 10093000

Not For Reproduction

Copyright © Briggs & Stratton. All Rights reserved

Mufflers, Exhaust Manifold

Mfg. No: 543477-0048-E1

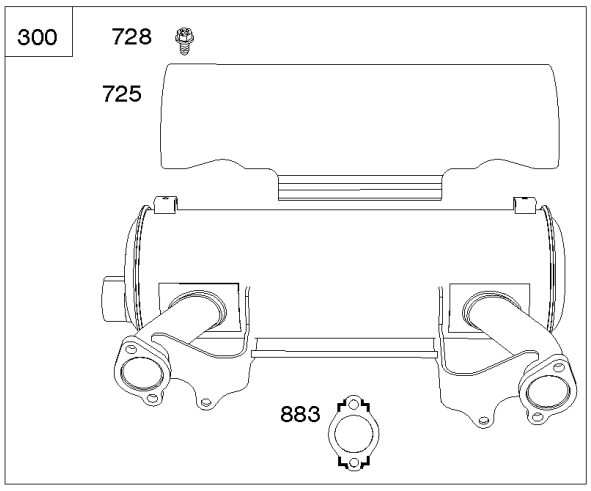

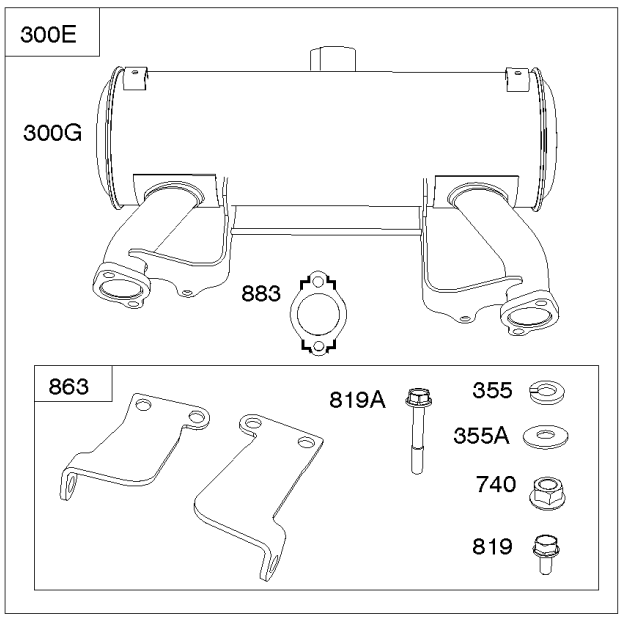

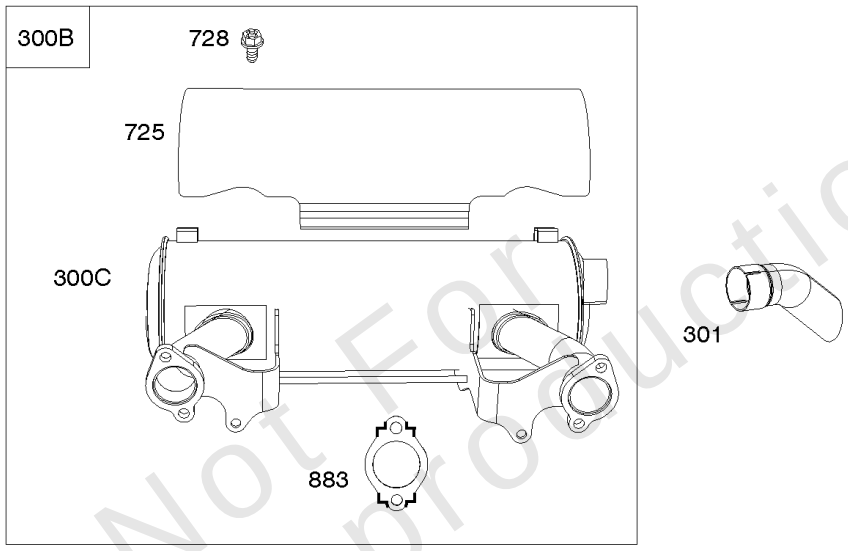

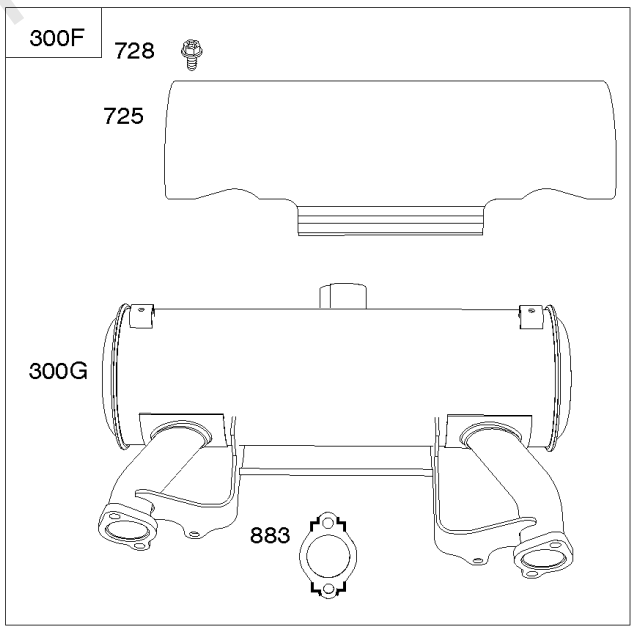

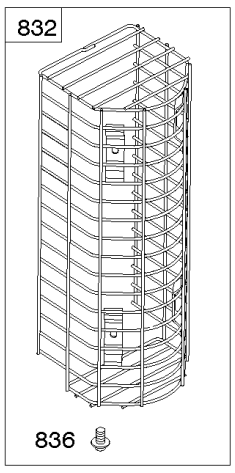

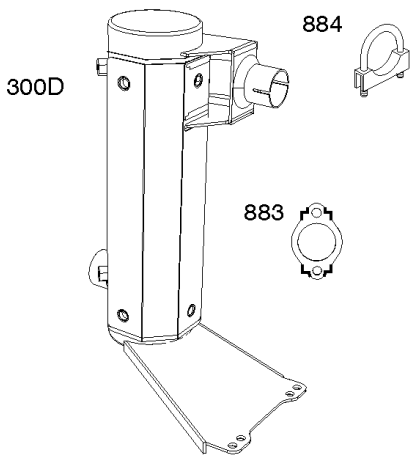

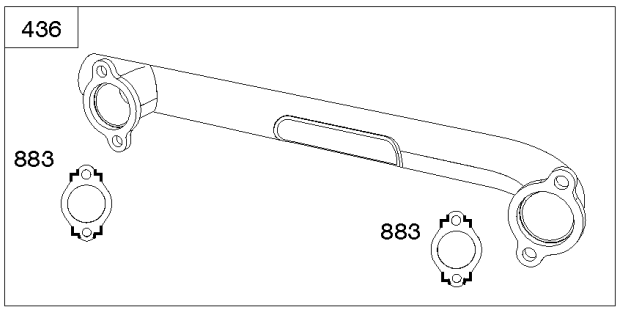

Not For Reproduction

Mufflers, Exhaust Manifold

REF NO	PART NO	QTY	DESCRIPTION
300	846153		MUFFLER -(Oil Filter Side Outlet)
300B	845741		MUFFLER -(Starter Motor Side Outlet)
300C	846283		MUFFLER -(Starter Motor Side Outlet)
355	691075		WASHER -(Muffler Bracket) (Lockwasher)
355A	844035		WASHER -(Muffler Bracket) (Flat Washer)
437	809743		SCREW -(Exhaust Manifold) (M8x25mm)
613	692062		SCREW -(Muffler) (M6x18mm)
725	841132		SHIELD, Heat
728	692067		SCREW -(Heat Shield) (M6x12mm)
740	690941		NUT -(Muffler Bracket)
819	692062		SCREW -(Muffler Bracket) (M8x18mm)
819A	807362		SCREW -(Muffler Bracket) (M6x50mm)
863	843487		BRACKET, Muffler
883	809872		GASKET, Exhaust

Not For Reproduction

Copyright © Briggs & Stratton. All Rights reserved

Oil Coolers, Filter, Oil Cooler Hoses

Mfg. No: 543477-0048-E1

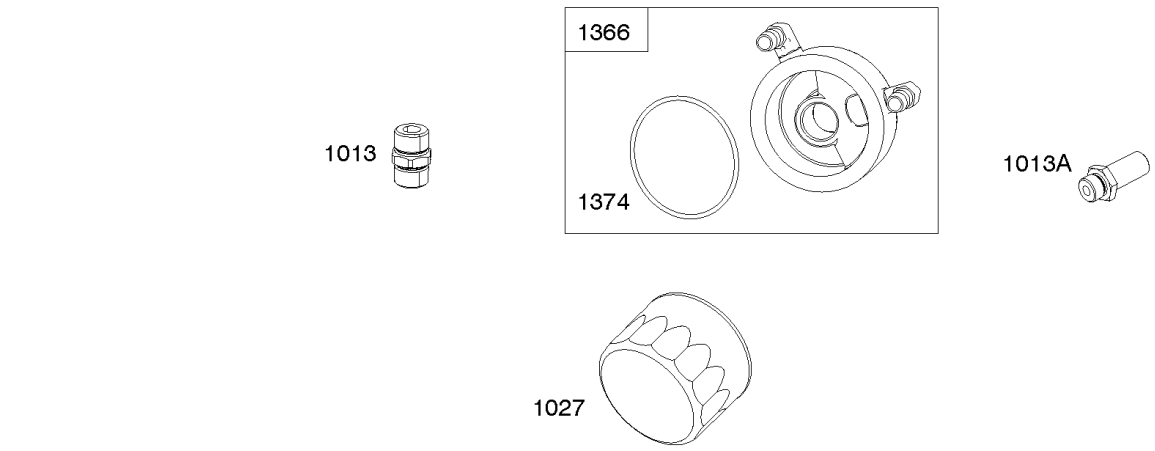

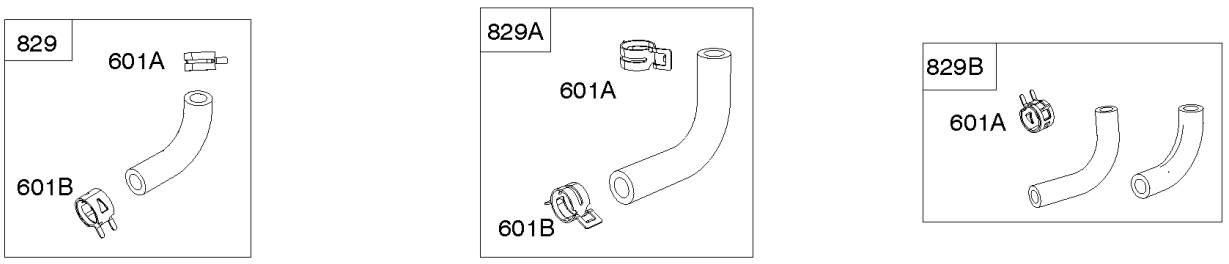

Not For Reproduction

Oil Coolers, Filter, Oil Cooler Hoses

REF NO	PART NO	QTY	DESCRIPTION
400	846249		COOLER, Oil -Used After Code Date 14022600
400A	846489		COOLER, Oil -Used Before Code Date 14022700
417	841233		SCREW -(Oil Cooler) (M6x10mm) -Used After Code Date 13072600
417A	843345		SCREW -(Oil Cooler) (M6x8mm) -Used Before Code Date 13072700
417B	846250		SCREW -(Oil Cooler) (M6x16mm)
601A	841597		CLAMP, Hose -(Oil Cooler Hose)
601B	845209		CLAMP, Hose -(Oil Cooler Hose)
829	846247		HOSE, Oil Cooler -Used After Code Date 15052200
829A	846248		HOSE, Oil Cooler -Used After Code Date 14052200
829B	846155		HOSE, Oil Cooler -Used Before Code Date 15052300
1013	809505		NIPPLE, Oil Filter
1013A	841602		NIPPLE, Oil Filter
1027	842921		FILTER, Oil
1155	806647		WASHER -(Oil Cooler) -Used Before Code Date 13072700
1366	841510		DIVERTER, Oil Cooler
1373	841233		SCREW -(Oil Cooler Bracket)
1374	841506		SEAL, O-Ring -(Oil Cooler Diverter)

Not For Reproduction

Replacement Engine - US & Canada

REF NO	PART NO	QTY	DESCRIPTION
	5434773048	1	Replacement Engine
	699428	1	Replacement Short Block
	-----		Top No-Load Speed: 3600 -Trim: ALL
	-----		Service Note: For all Go-Karts use only a Model 136200 series engine as a replacement, regardless of the original Model.

Not For Reproduction

Mfg. No: 543477-0048-E1

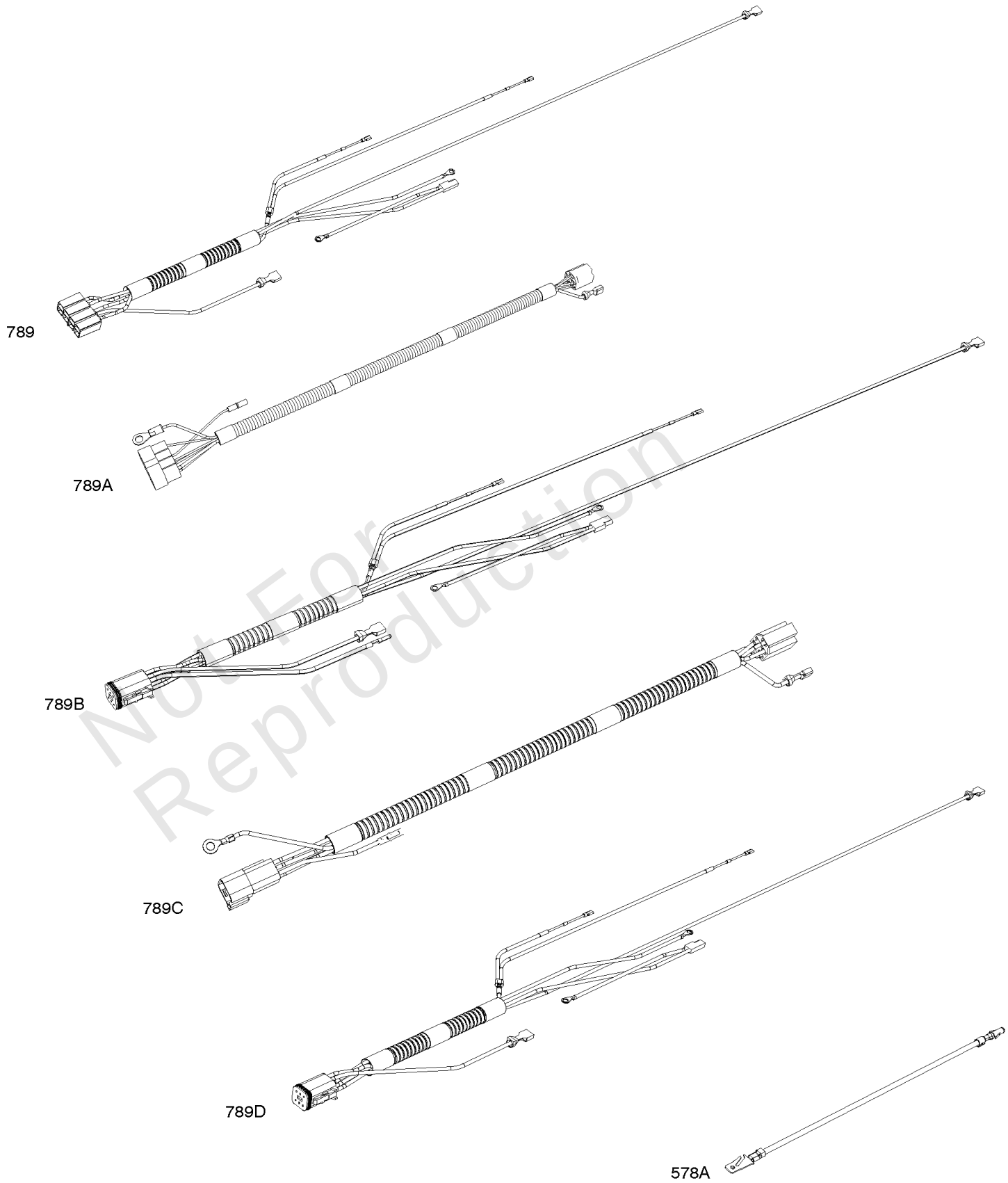

Not For Reproduction

Copyright © Briggs & Stratton. All Rights reserved

Wire Harness's, Wire Assembly

REF NO	PART NO	QTY	DESCRIPTION
578A	847202		WIRE ASSEMBLY -(Wire Harness to Regulator) (Red)
789	809906		HARNESS, Wiring -Used Before Code Date 15110200
789	847060		HARNESS, Wiring -Used After Code Date 15110100
789A	809967		HARNESS, Wiring

Not For Reproduction

Copyright © Briggs & Stratton. All Rights reserved

Model 54-61 Engine Accessories Catalog

Not For Reproduction

Copyright © Briggs & Stratton. All Rights reserved

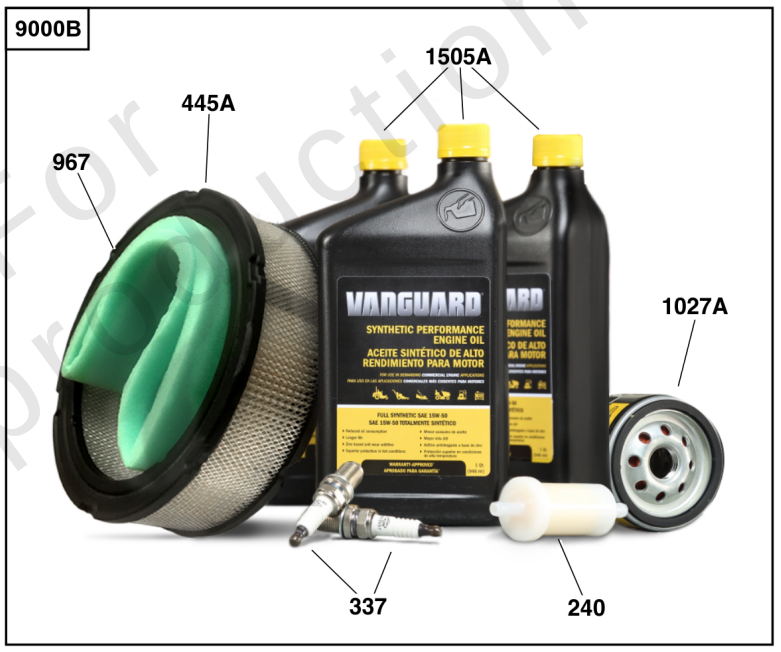

Not For Reproduction

Maintenance Kits

REF NO	PART NO	QTY	DESCRIPTION
9000	84002318		KIT, Maintenance -(Oil Guard™ Engines)
9000A	84002315		KIT, Maintenance -(Non-Oil Guard™ Engines)
9000B	84004936		KIT, Maintenance -(Non-Oil Guard™ Engines) (20 - 40 HP)
240	845125	1	FILTER, Fuel
337	491055S	2	PLUG, Spark
445	841497	1	FILTER, A/C Cartridge -"Professional / PXi" & "Commercial / CXi".
445A	692519	1	FILTER, A/C Cartridge -"Professional / PXi" & "Commercial / CXi".
967	692520	1	FILTER, Pre Cleaner
1027	595930	1	FILTER, Oil -(Oil Guard™)
1027A	842921	1	FILTER, Oil -(Vanguard®)
1505	100170		OIL-5QT VANGUARD (CASE) -(5 qt Bottle)
1505A	100169		OIL-1QT VANGUARD (CASE) -(1 qt Bottle)

Not For Reproduction

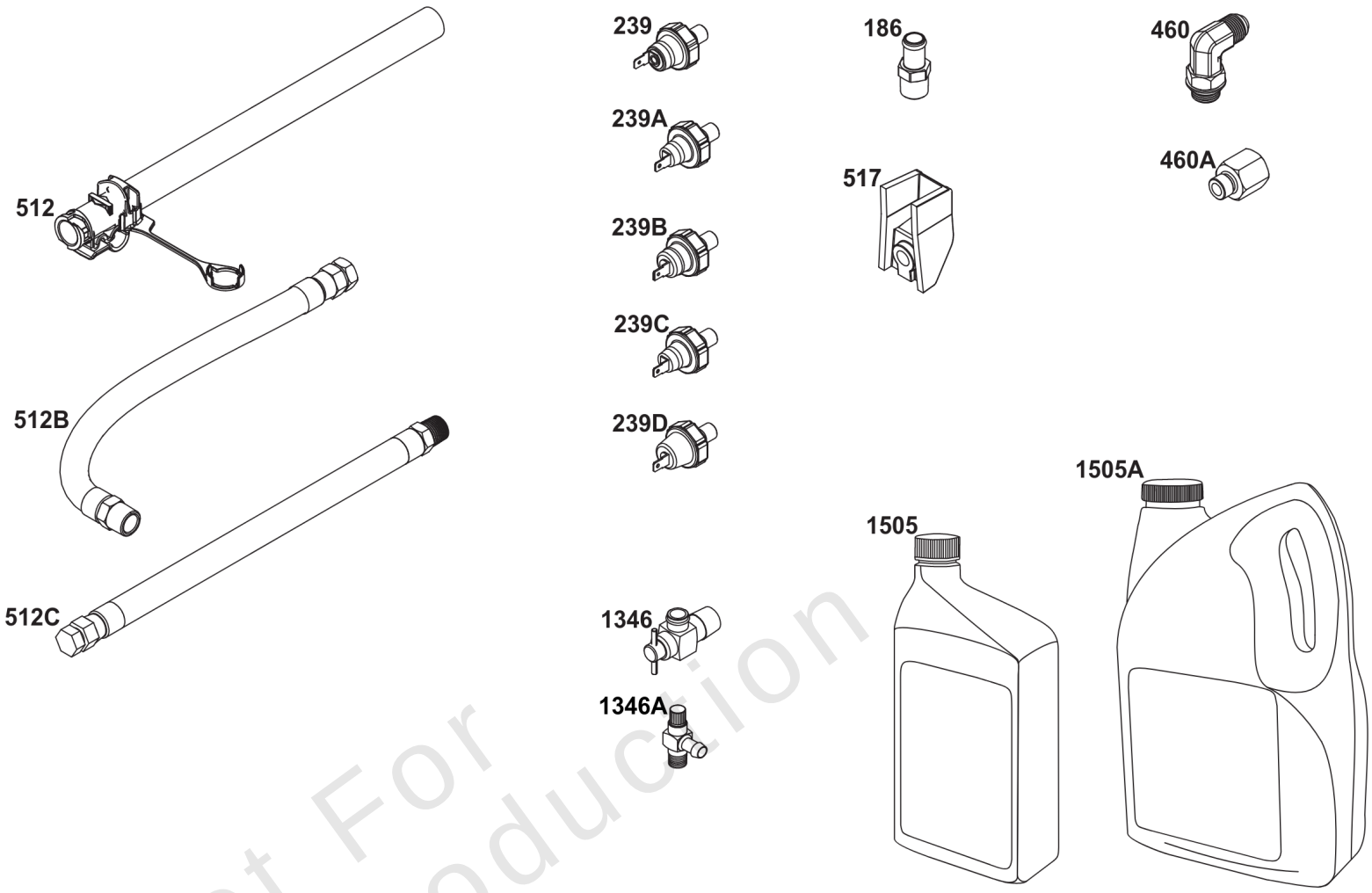

Not For Reproduction

Lubrication

REF NO	PART NO	QTY	DESCRIPTION
186	796532	1	CONNECTOR, Hose -(Threaded Engine Block Connector for EZ-Oil Drain Hose)(Order hose separate)
239	690233	1	SWITCH, Oil Pressure -(2-4 PSI Normally-Closed Switch)
239A	491657S	1	SWITCH, Oil Pressure -(3-5 PSI Normally-Closed Switch)
239B	841281	1	SWITCH, Oil Pressure -(7-10 PSI Normally-Closed Switch)
239C	694115	1	SWITCH, Oil Pressure -(9-13 PSI Normally-Closed Switch)
239D	697049	1	SWITCH, Oil Pressure -(3-6 PSI Normally-Open Switch)
460	1761386YP	1	CONNECTOR, Filter Adapter -(Oil Drain Valve) (Fitting M14, 90 Degree 9/16 JIC)
460A	5100366SM	1	METRIC ADAPTER, M14-1 -(Threaded engine block adapter M14 to 3/8 for EZ-Oil Drain connector) (order 796532 separate)
512	594200	1	HOSE, Oil Drain -(EZ-Oil Drain Hose, 10.5") (Order threaded engine block connector separate)
512	593635	1	HOSE, Oil Drain -(EZ-Oil Drain Hose, 13.75") (Order threaded engine block connector separate)
512B	1723165SM	1	HOSE, Oil Drain, 10-1/2" Long, 3/8-18 Fittings -(10.5")
512C	5048681SM	1	HOSE, OIL DRAIN -(12.5")
517	593633	1	RETAINER, Oil Drain
1346	844802	1	VALVE, Oil Drain Shut Off
1346A	492031	1	VALVE, Oil Drain Shut Off
1505	100169		OIL-1QT VANGUARD (CASE) -(1 qt. Bottle)
1505A	100170		OIL-5QT VANGUARD (CASE) -(5 qt. Bottle)

Not For Reproduction

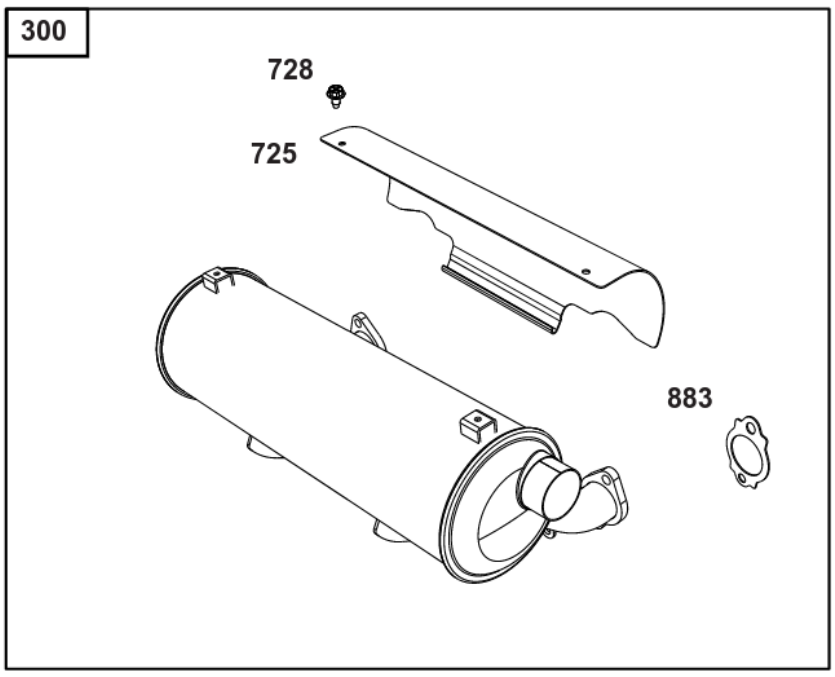

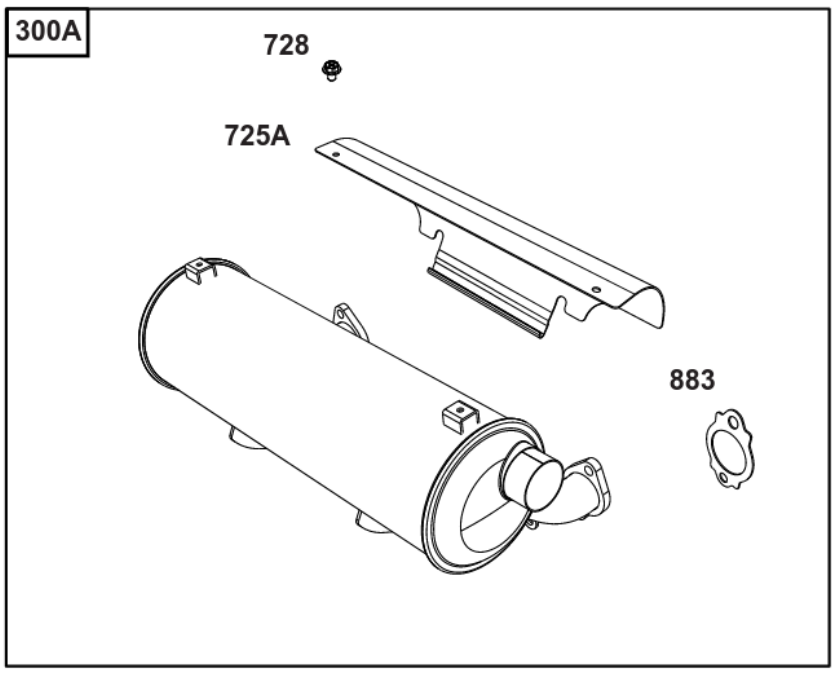

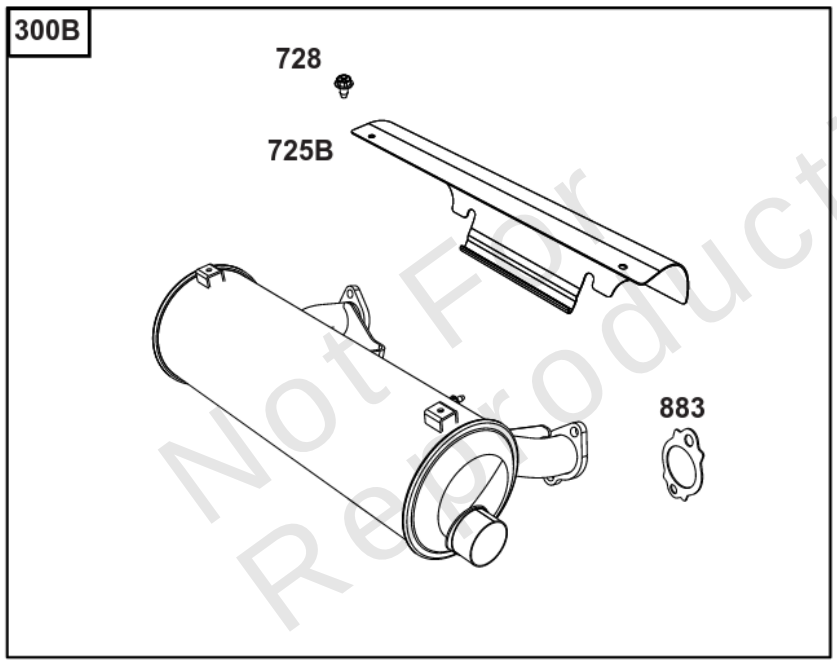

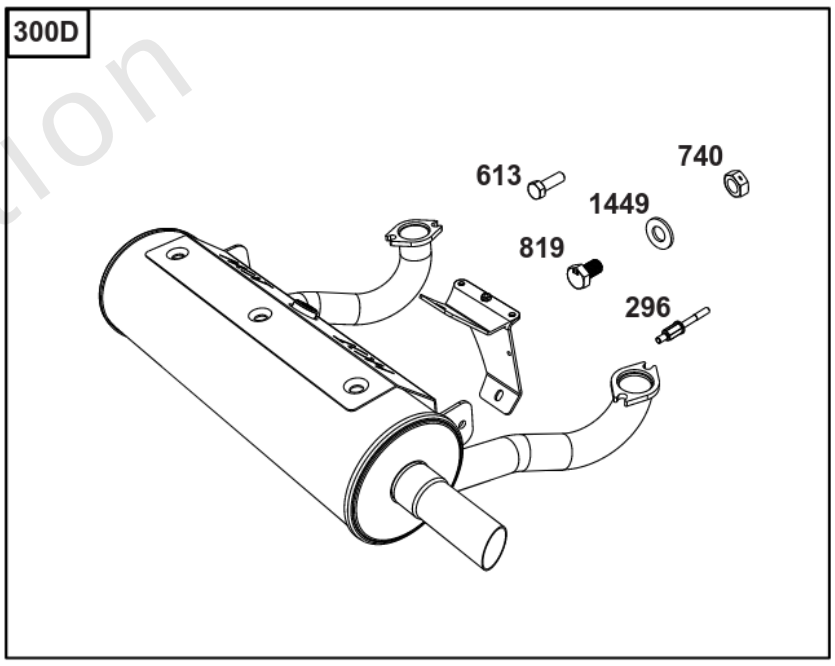

Not For Reproduction

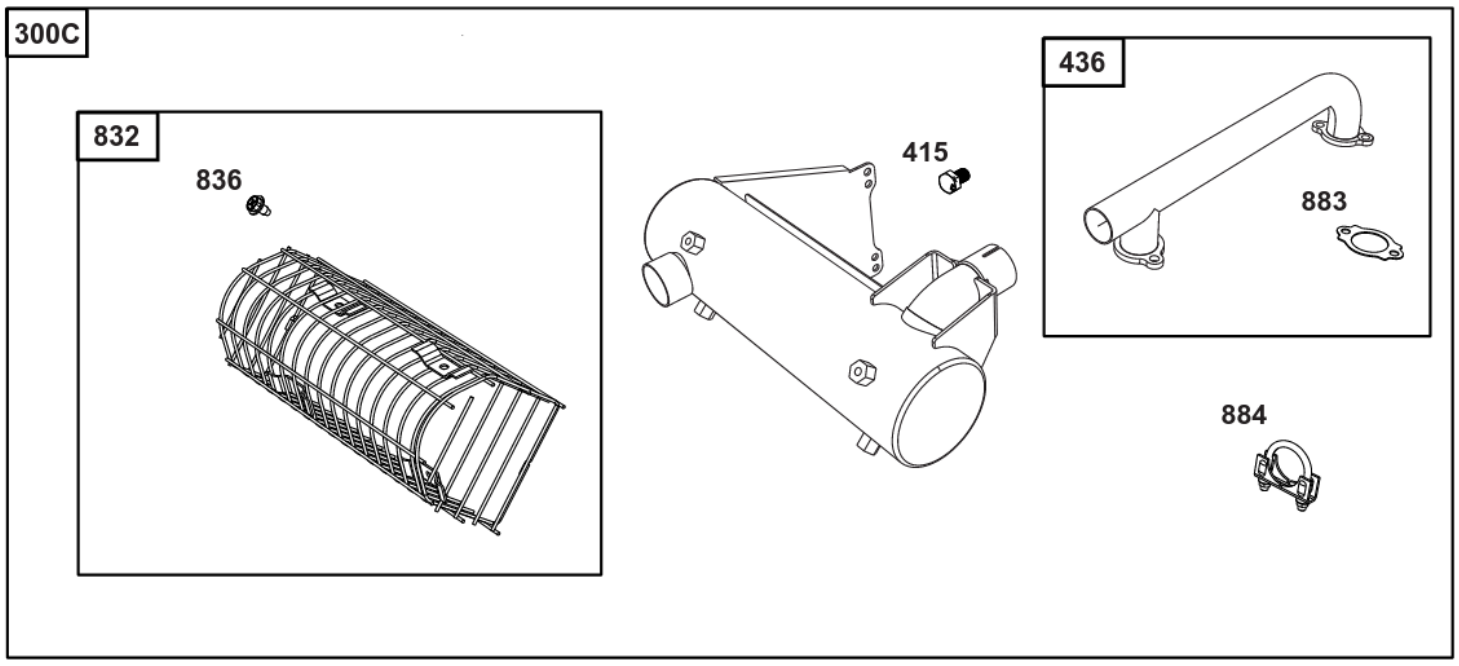

Copyright © Briggs & Stratton. All Rights reserved

Oil Filter Side Outlet Mufflers

REF NO	PART NO	QTY	DESCRIPTION
296	844813	4	STUD -(Muffler)
300	846819	1	MUFFLER -(High Mount) (Oil Filter Side Outlet) (EFI)
300A	846246	1	MUFFLER -(Mid Mount) (Oil Filter Side Outlet)
300B	847486	1	MUFFLER -(Mid Mount) (Oil Filter Side Outlet) (EFI)
300C	847278	1	MUFFLER -(Side Mount) (Oil Filter Side Outlet) (EFI)
300D	84007299	1	MUFFLER -(Vertical Shaft)(Oil Filter Side Outlet)
415	596859	1	PLUG
436	841681	1	MANIFOLD, Exhaust
613	596859		PLUG -(Muffler)
725	847229	1	SHIELD, Heat
725A	844338	1	SHIELD, Heat
725B	847487	1	SHIELD, Heat
728	692067	2	SCREW -(Heat Shield)
740	703164	2	NUT -Muffler Bracket
819	5025011X8SM	2	CAPSCREW, Hex Head, 5/16-18 X 1 -(Muffler Bracket)
832	841682	1	GUARD, Muffler
836	841233	4	SCREW -(Muffler Guard)
883	809872	2	GASKET, Exhaust
884	841968	1	CLAMP, Muffler
1449	703350	4	WASHER -(Muffler)

Not For Reproduction

Copyright © Briggs & Stratton. All Rights reserved

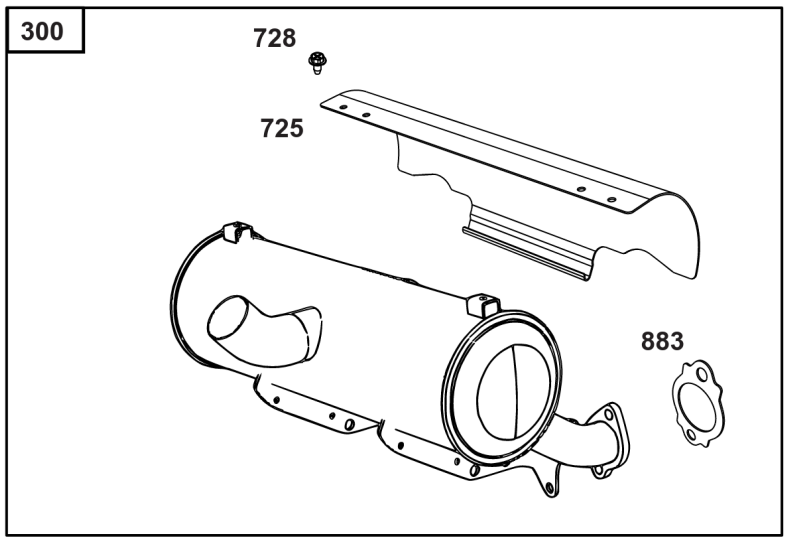

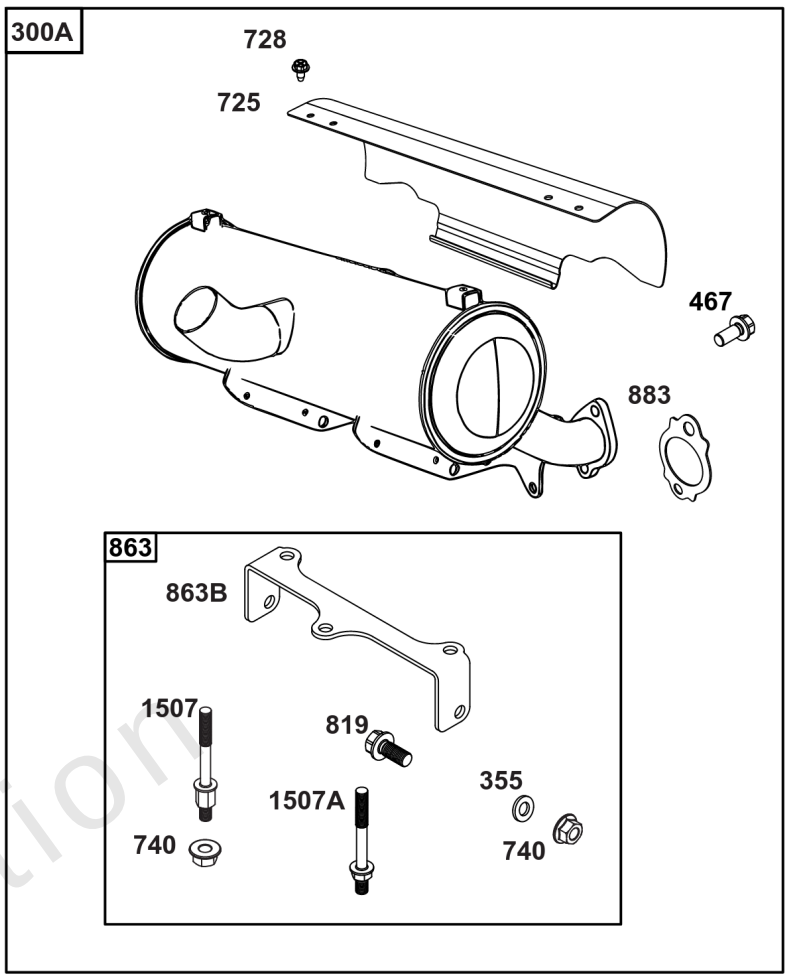

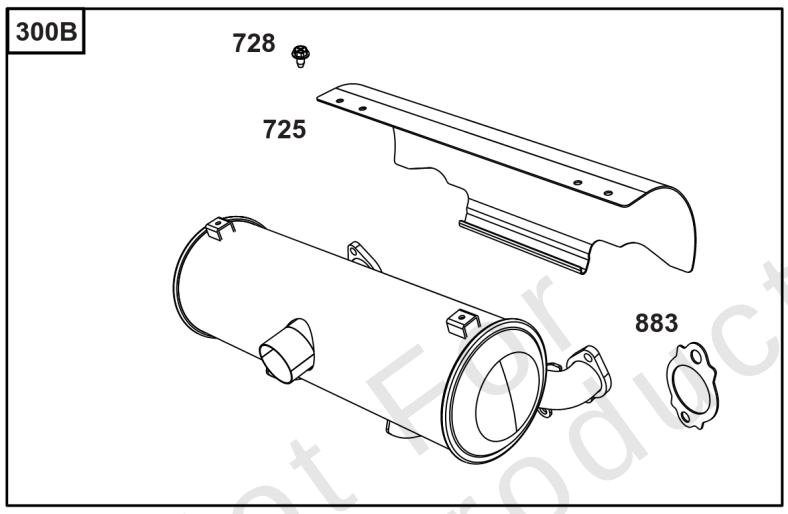

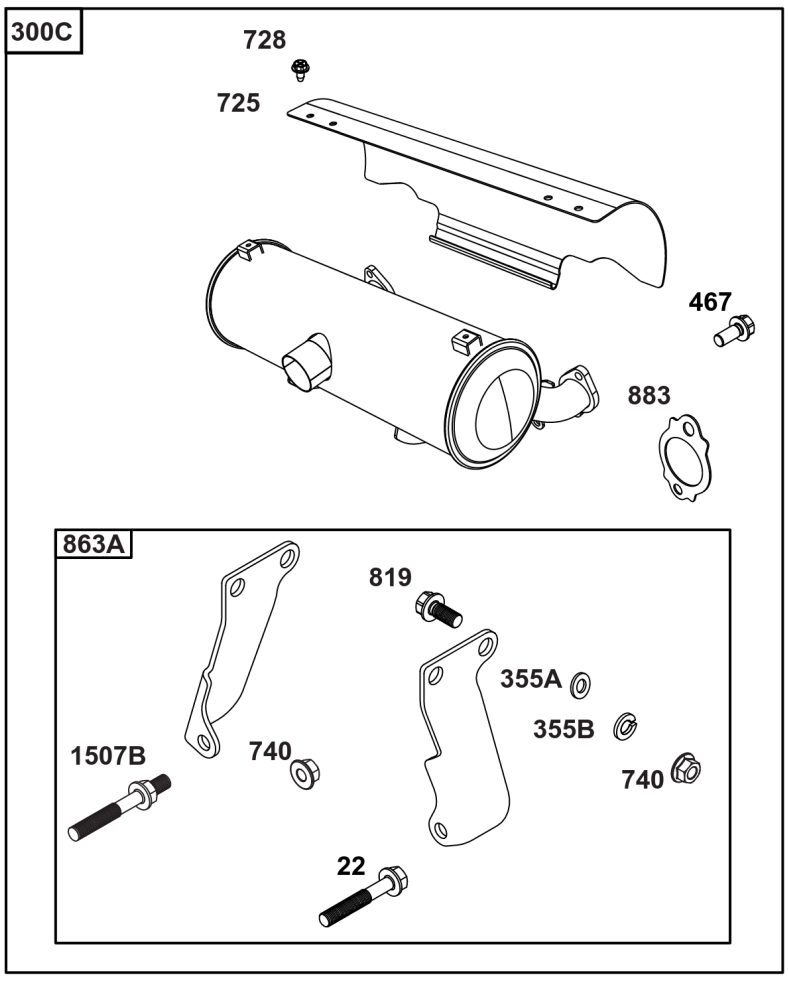

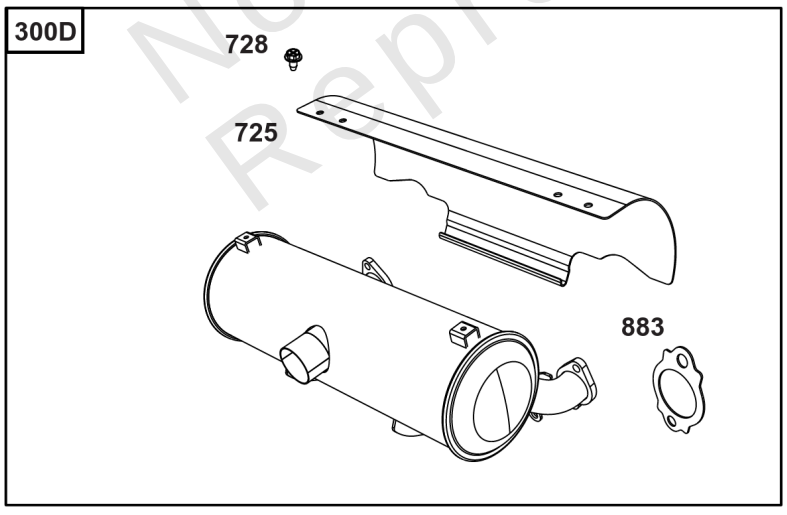

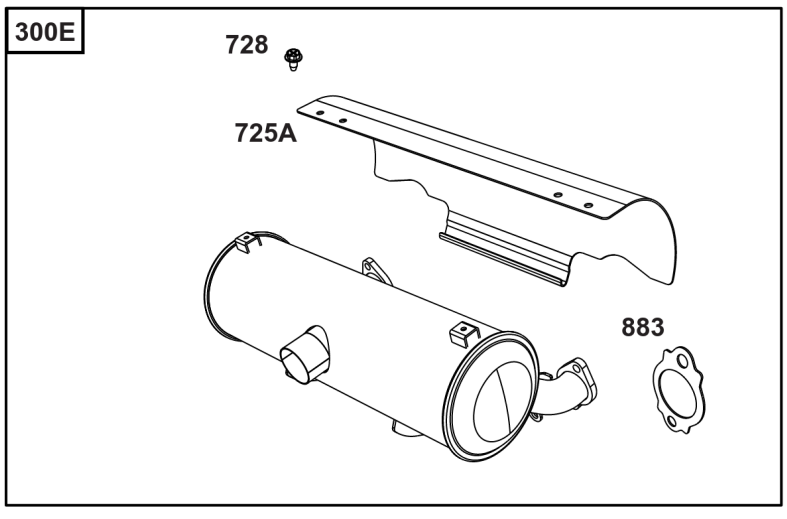

Not For Reproduction

Center Outlet Mufflers

REF NO	PART NO	QTY	DESCRIPTION
22	807362	2	SCREW -(Muffler Bracket)
300	846443	1	MUFFLER -(Vertical Shaft) (Center Outlet) (304 Stainless Steel)
300A	847940	1	MUFFLER -(Vertical Shaft) (Center Outlet) (304 Stainless Steel) (Performance Muffler for 40 HP)
300B	846154	1	MUFFLER -(Horizontal Shaft) (High Mount) (Center Outlet)
300C	847922	1	MUFFLER -(Horizontal Shaft) (High Mount) (Center Outlet) (304 Stainless Steel) (Performance Muffler for 40 HP)
300D	846444	1	MUFFLER -(Horizontal Shaft) (High Mount) (Center Outlet) (304 Stainless Steel)
300E	847478	1	MUFFLER -(Horizontal Shaft) (High Mount) (Center Outlet) (O2 Sensor Port) (EFI)
355	844035	2	WASHER -(Muffler Bracket)
355A	691261	2	WASHER -(Muffler Bracket)
355B	691075	8	WASHER -(Muffler Bracket)
467	846149	4	SCREW -(Exhaust Manifold)
725	841132	1	SHIELD, Heat
725A	847229	1	SHIELD, Heat
728	692067	2	SCREW -(Heat Shield)
740	690941	5	NUT
819	692062	2	SCREW -(Muffler Bracket)
863	848296	1	BRACKET, Muffler
863A	843487	1	BRACKET, Muffler
863B	848296	1	BRACKET, Muffler
883	809872	2	GASKET, Exhaust
1507	848297	1	STUD -(Muffler Bracket)
1507A	848298	2	STUD -(Muffler Bracket)
1507B	846324	2	STUD -(Muffler Bracket)

Not For Reproduction

Copyright © Briggs & Stratton. All Rights reserved

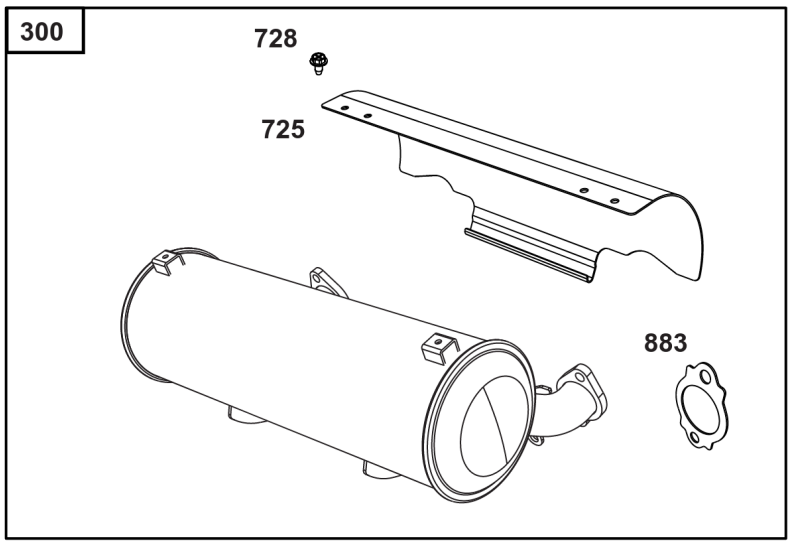

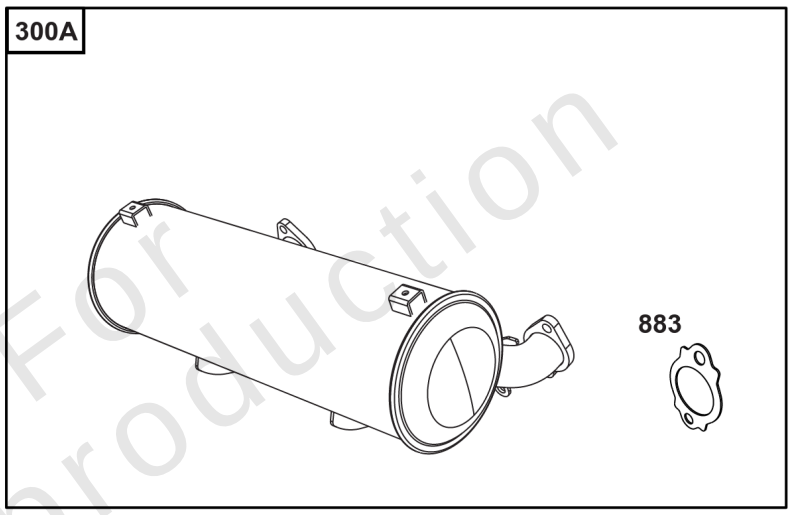

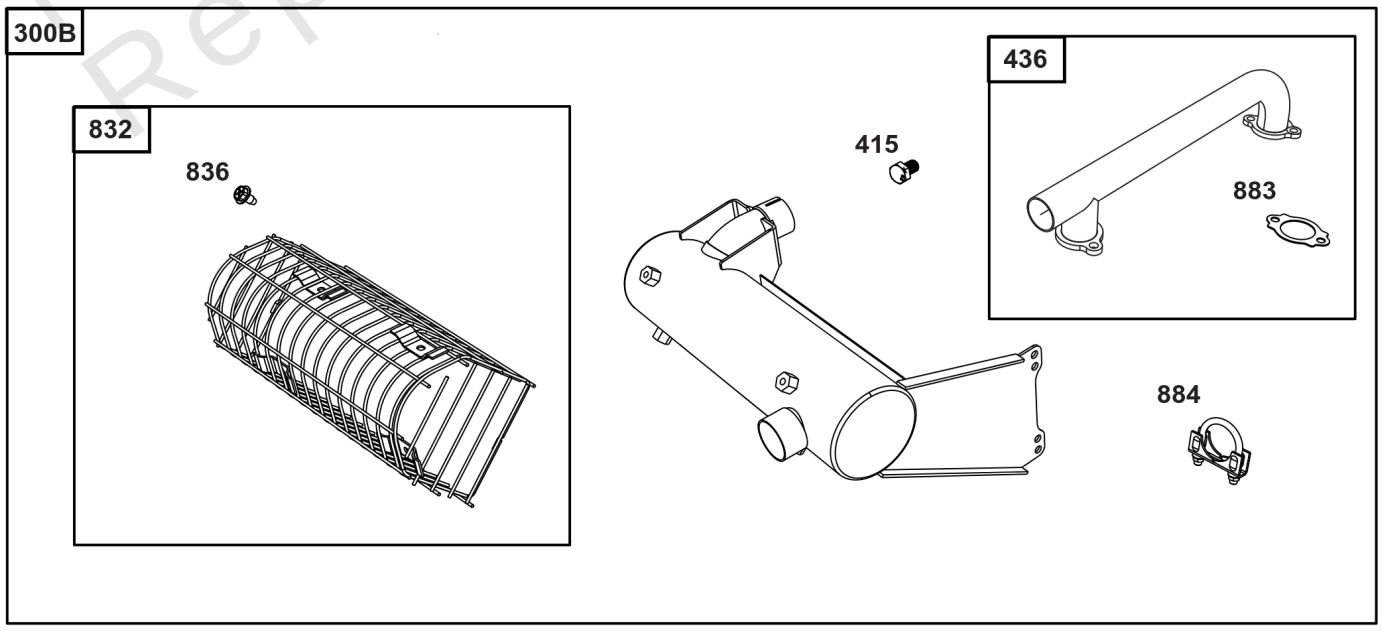

Not For Reproduction

Starter Side Outlet Mufflers

REF NO	PART NO	QTY	DESCRIPTION
300	845741	1	MUFFLER -(High Mount) (Starter Side Outlet)
300A	847083	1	MUFFLER -(Starter Side Outlet) (EFI)
300B	847279		MUFFLER -(Side Mount) (Starter Side Outlet) (EFI)
415	596859	1	PLUG
436	842263	1	MANIFOLD, Exhaust
725	841132	1	SHIELD, Heat
728	692067	2	SCREW -(Heat Shield)
832	841682	1	GUARD, Muffler
836	841233	4	SCREW -(Muffler Guard)
883	809872	2	GASKET, Exhaust
884	841968	1	CLAMP, Muffler

Not For Reproduction

Copyright © Briggs & Stratton. All Rights reserved

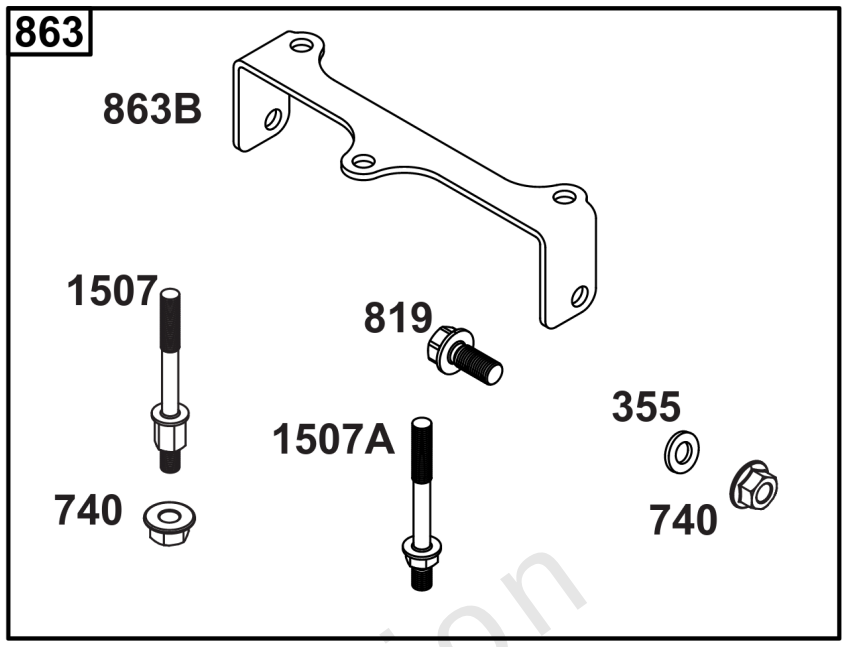

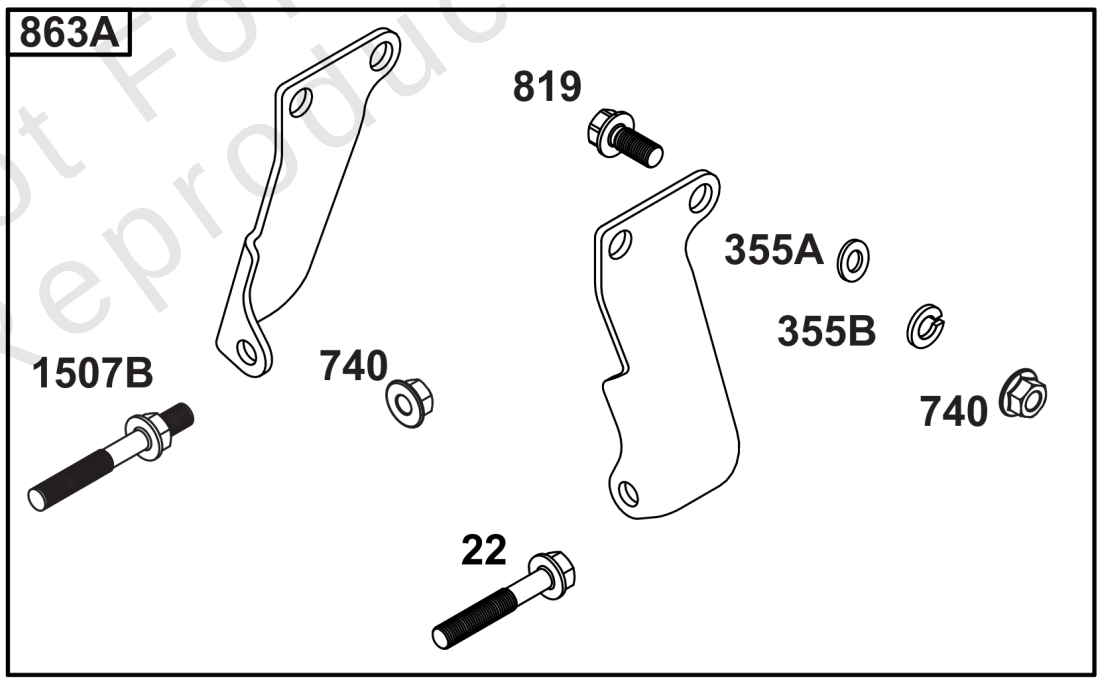

Not For Reproduction

Muffler Bracket Kits

REF NO	PART NO	QTY	DESCRIPTION
22	807362	2	SCREW -(Muffler Bracket)
355	844035	2	WASHER -(Muffler Bracket)
355A	691261	2	WASHER -(Muffler Bracket)
355B	691075	8	WASHER -(Muffler Bracket)
740	690941	6	NUT -(Muffler Bracket)
819	692062	2	SCREW -(Muffler Bracket)
863	848316	1	BRACKET, Muffler -(Vertical)
863A	843487	1	BRACKET, Muffler -(Horizontal)
863B	848296	1	BRACKET, Muffler -(Vertical)
1507	848297	1	STUD -(Muffler Bracket)
1507A	848298	2	STUD -(Muffler Bracket)
1507B	846324	2	STUD -(Muffler Bracket)

Not For Reproduction

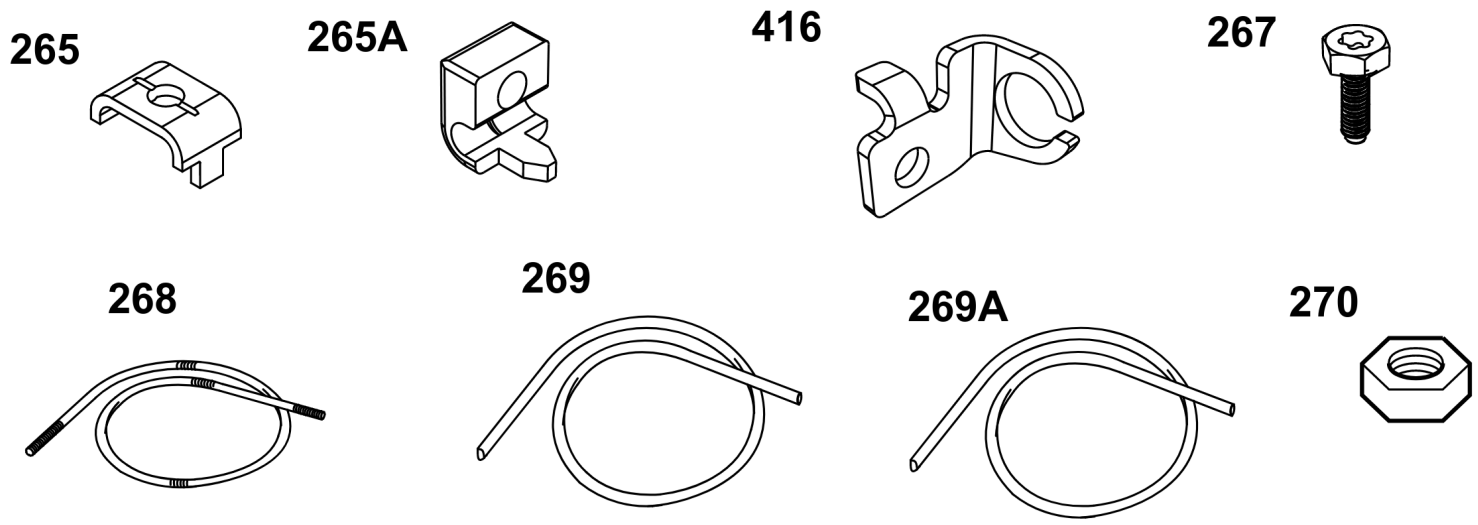

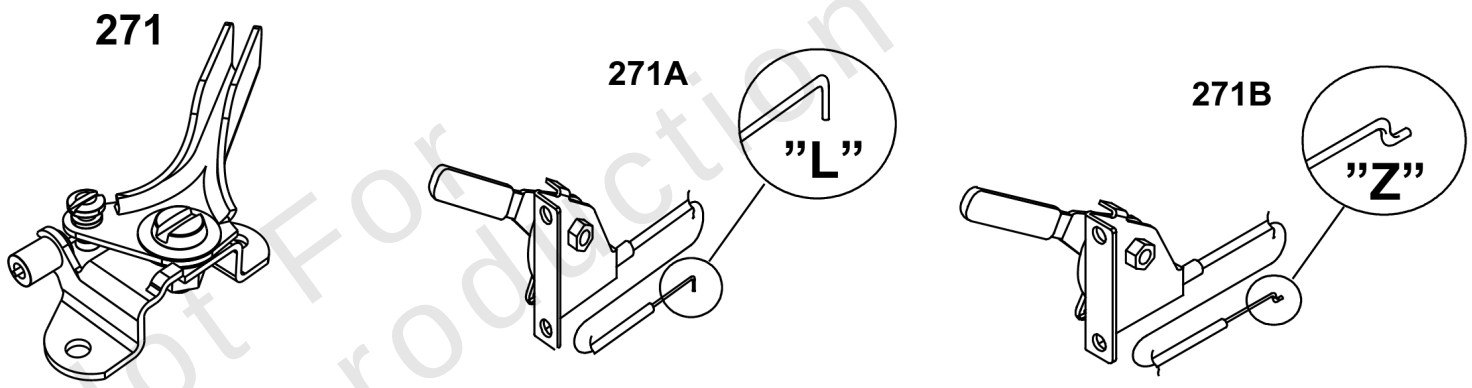

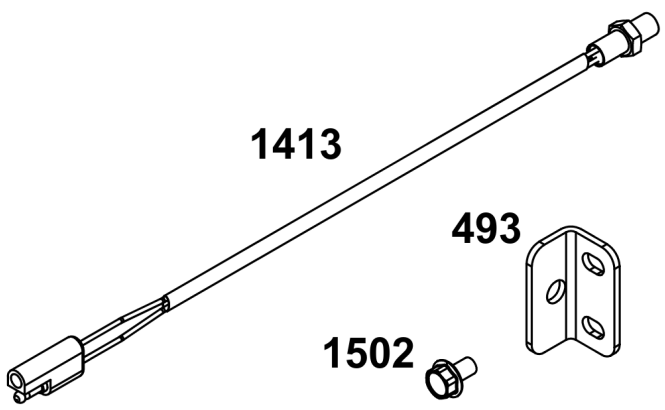

Not For Reproduction

Speed Control

REF NO	PART NO	QTY	DESCRIPTION
265	691024	1	CLAMP, Casing -(Casing Clamp for Hard Casing)
265A	690798	1	CLAMP, Casing -(Casing Clamp for Soft Casing)
267	792629	1	SCREW -(Screw for Casing Clamp)
268	691025	1	CASING, Control Wire -(Wire Casing 72")
269	691026	1	WIRE, Control -(Control Wire 78")
269A	93907	1	WIRE, Control -(Control Wire 100")
270	691027	1	NUT -(Nut for Wire Casing)
271	691028	1	LEVER, Control
271A	692105	1	LEVER, Control -(Wire with “L” formed end)
271B	692541	1	LEVER, Control -(Wire with “Z” formed end)
416	595196	1	BRACKET, Throttle Cable -(Casing Clamp for Snap-In Casing)
493	842713	1	BRACKET, Mounting -(Speed Sensor)
1413	844449	1	SENSOR, Speed -(Requires 842713 Bracket and two 841233 screws)
1502	841233	2	SCREW -(Speed Sensor)

Not For Reproduction

Copyright © Briggs & Stratton. All Rights reserved

330

853

415

1518

1616

983

789

789A

789B

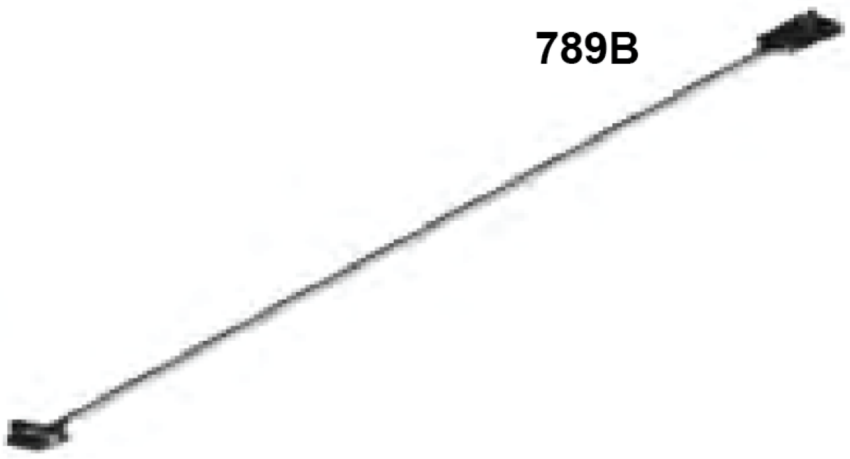

Not For Reproduction

Electrical

REF NO	PART NO	QTY	DESCRIPTION
330	847476	1	SENSOR, Oxygen -(Extended Length O2 Sensor 23.5")
415	1714480SM	1	PLUG -(Plug for Ignition Switch Removal)
789	809967	1	HARNESS, Wiring -(Wire Harness Extension 8 Pin – 22”) (Use with standard key switch 692318 or water/dust resistant key switch 847448)
789A	846776	1	HARNESS, Wiring -(Wire Harness Extension 6 Pin – 22”) (Use with standard key switch 692318 or water/dust resistant key switch 847448)
789B	847017	1	WIRE ASSEMBLY -(Wire Harness Extension for 847016 Tach 32")
853	80028618	1	ADAPTER, Wire -(Wire Harness Adapter 6 Pin to 8 Pin)
983	5103809YP	1	LIGHT, Indicator -(MIL Light Indicator, LED Red)
1518	847016	1	TACHOMETER -(Tach, Hour Meter with MIL Light for EFI Engines)
1616	19626	1	CODE READER -(Tiny Scan)

Not For Reproduction

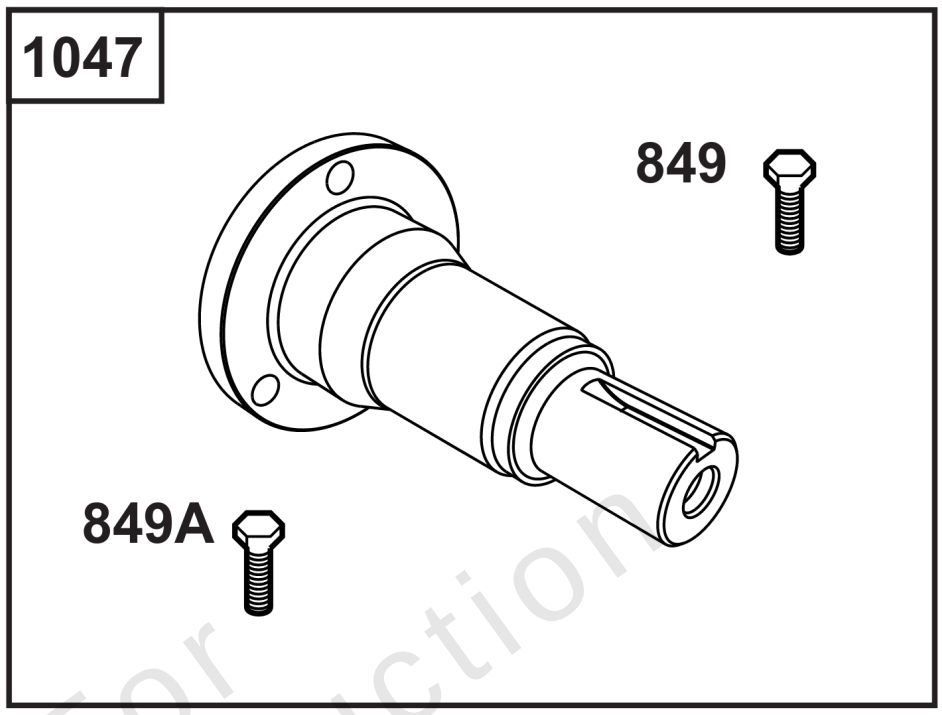

Not For Reproduction

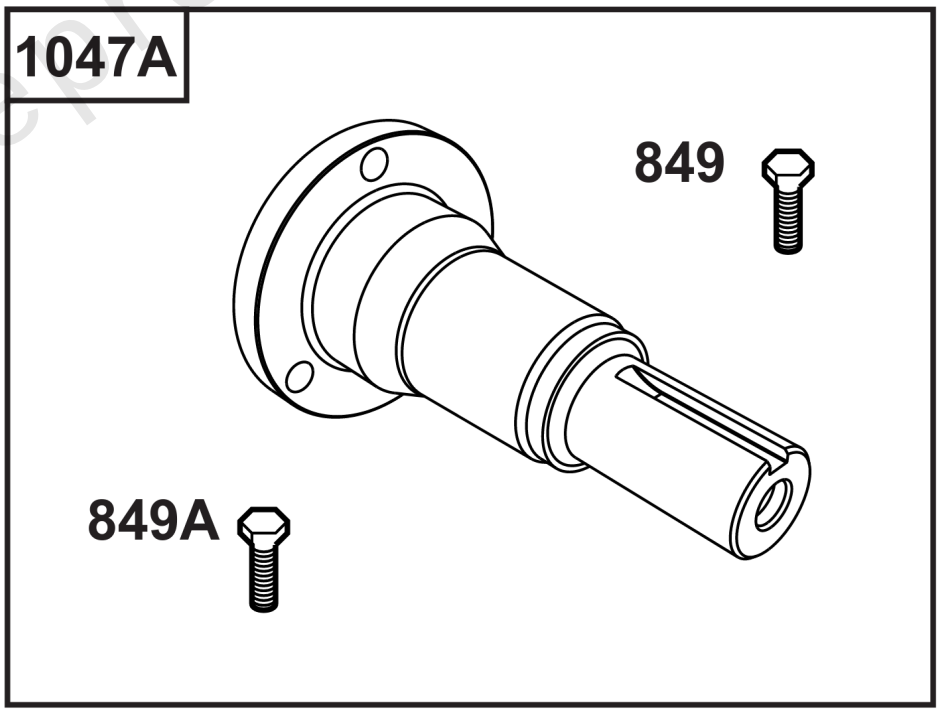

Copyright © Briggs & Stratton. All Rights reserved

Stub Shafts

REF NO	PART NO	QTY	DESCRIPTION
849	596370	3	SCREW -(Stub Shaft)
849A	846235	3	SCREW -(Stub Shaft)
1047	841304	1	SHAFT, Stub -(Flywheel Mounted) (1-1/8" diameter, 148 mm length)
1047A	843342	1	SHAFT, Stub -(Flywheel Mounted) (1-1/8" diameter, 176 mm length)

Not For Reproduction

Copyright © Briggs & Stratton. All Rights reserved

613

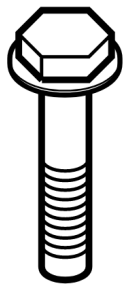

437

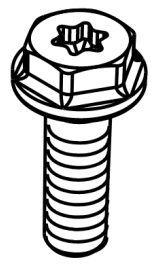

151

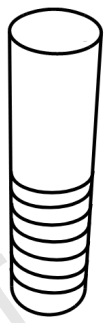

1177

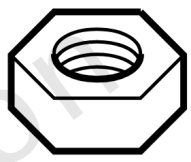

883

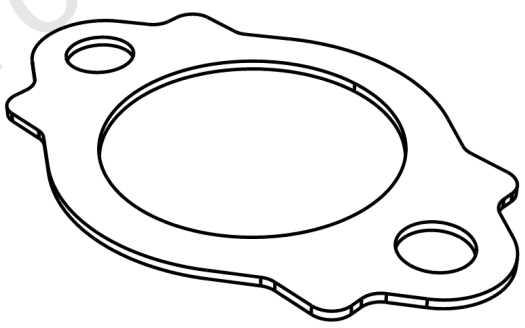

994

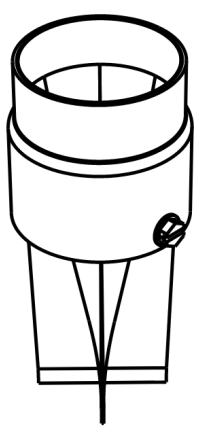

301

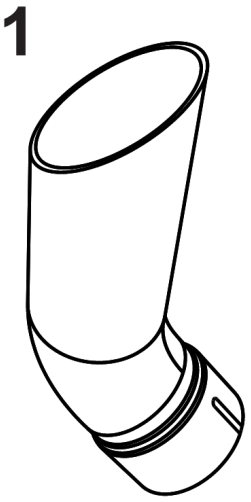

Not For Reproduction

Spark Arrester/Deflector

REF NO	PART NO	QTY	DESCRIPTION
151	841185	4	STUD -(4 per engine)
301	841518	1	PIPE, Exhaust -(For 44.7 O.D. muffler outlet pipe) (Requires clamp 843624)
437	809743	4	SCREW -(M8 x 25 for Mounting Mufflers) (4 per engine)
613	692062	4	SCREW -(M8 x 18 for Mounting Mufflers) (4 per engine)
883	809872	2	GASKET, Exhaust -(2 per engine)
994	843204	1	ARRESTOR, Spark -(1.75") (44.7 mm) (O.D. Outlet Tube)
1177	842067	4	NUT -(Required if using 841185 stud)

Not For Reproduction

Copyright © Briggs & Stratton. All Rights reserved

805A

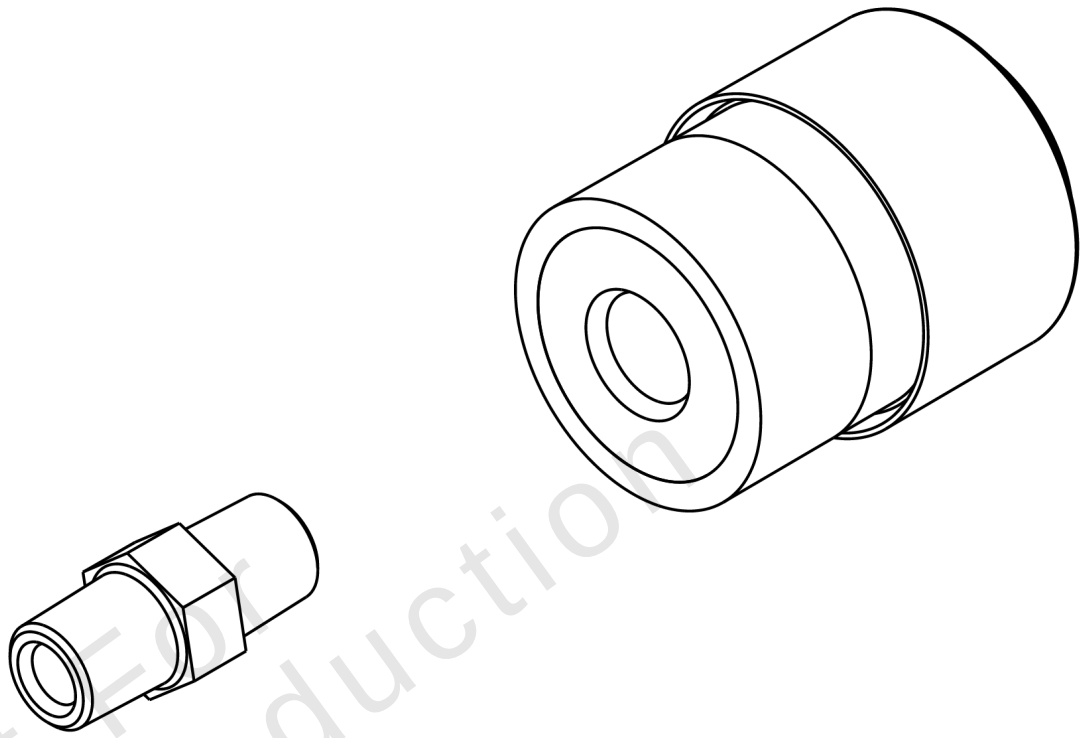

Not For Reproduction

Air Intake

REF NO	PART NO	QTY	DESCRIPTION
805A	843024	1	MINDER, Filter

Not For Reproduction

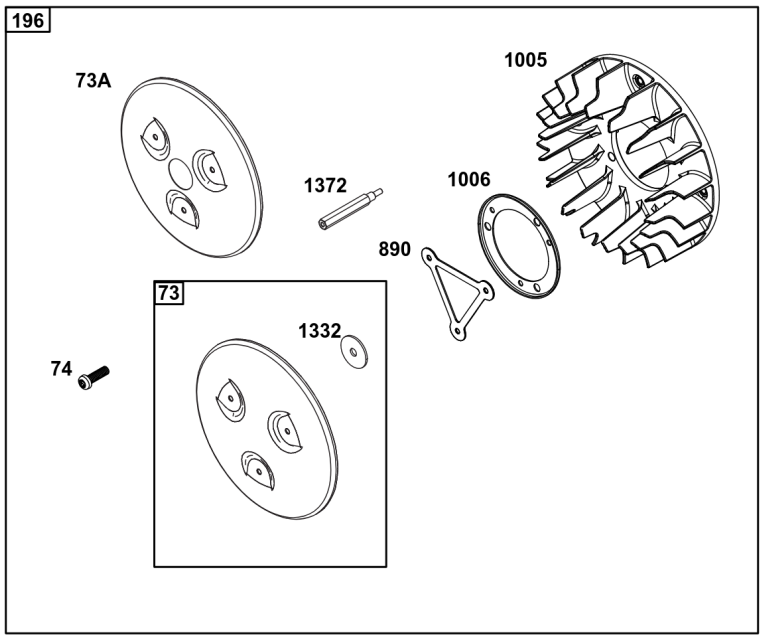

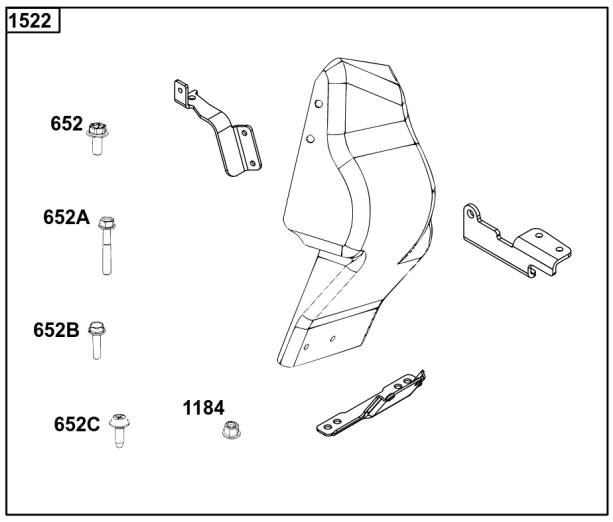

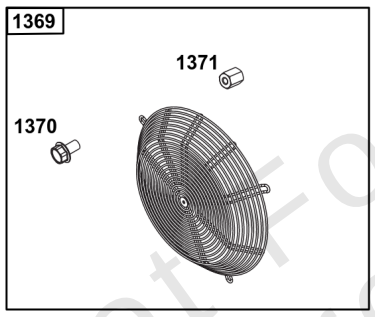

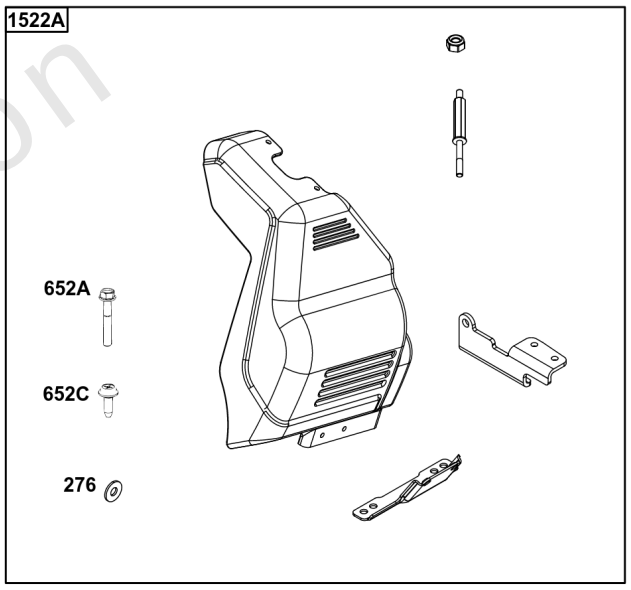

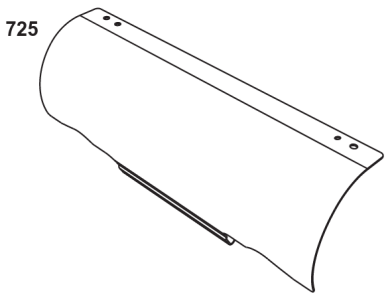

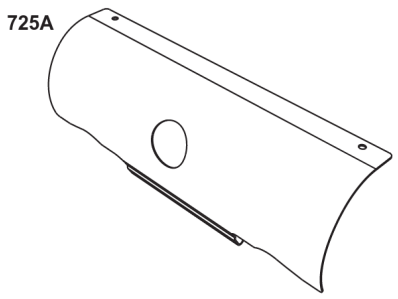

Not For Reproduction

Guarding

REF NO	PART NO	QTY	DESCRIPTION
73	841840	1	SCREEN, Rotating
73A	842248	1	SCREEN, Rotating
74	809947	3	SCREW -(Rotating Screen) (M6x20mm)
196	847200	1	GUARD, Flywheel Fan
276	595601	2	WASHER, Sealing
652	807084	1	SCREW
652A	807362	2	SCREW
652B	807421	1	SCREW
652C	692067	6	SCREW
725	841132	1	SHIELD, Heat -(Requires 2 x 692067 Screw)
725A	847229	1	SHIELD, Heat -(With 02 Sensor Hole) (EFI)
890	809987	1	BRACKET, Support
1005	846996	1	FAN, Flywheel
1006	847198	1	RETAINER, Fan
1184	690941	2	NUT
1332	809948	3	WASHER
1369	995019	1	FAN/SCREEN ASSEMBLY
1370	841233	4	SCREW -(Flywheel Fan Guard)
1371	841537	4	NUT -(Flywheel Fan Guard)
1372	809946	3	STUD
1522	846510	1	COVER, Wire -(BIG BLOCK™ Horizontals)
1522A	847235	1	COVER, Wire -(BIG BLOCK™ Horizontals)

Not For Reproduction

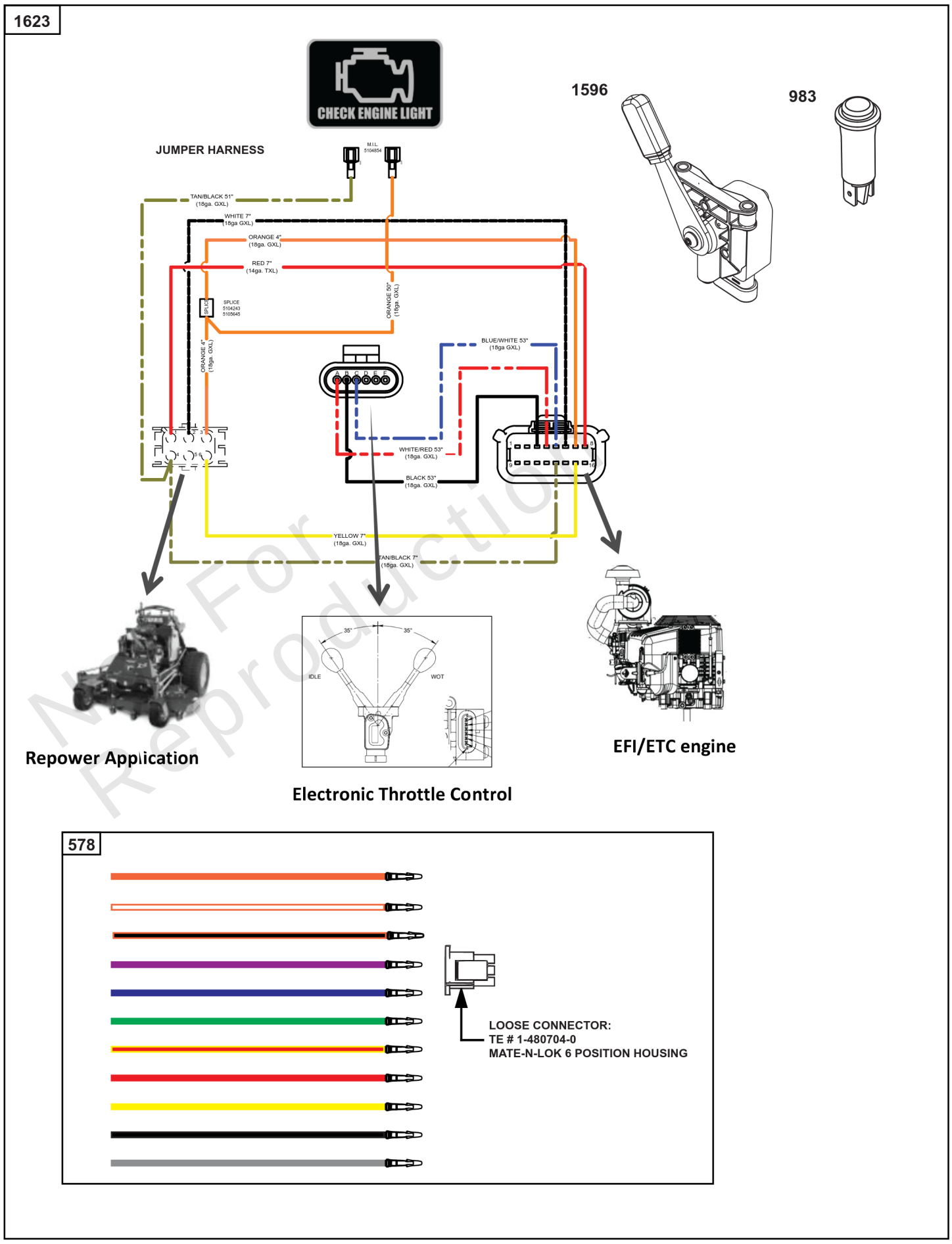

Not For Reproduction

Electronic Throttle Kit

REF NO	PART NO	QTY	DESCRIPTION
578	84007350	1	WIRE ASSEMBLY
983	5103809YP	1	LIGHT, Indicator
1596	84007271	1	LEVER, Electronic Throttle
1623	84008670	1	KIT, Throttle Assembly -(Analog Electronic Throttle Control)

Not For Reproduction

VANGUARD®

COMMERCIAL POWER

BRIGGS & STRATTON®

Copyright © Briggs & Stratton. All Rights reserved