Parts Manual

Mfg. No: 311777-0131-E1

Copyright © Briggs & Stratton. All Rights reserved

22-Jun-2026

Model Components

Page

Air Cleaner, Muffler, Fuel. 4
Alternator, Control Bracket, Ignition. 8
Blower Housing, Blower Housing Cover. 12
Carburetor, Overhaul Set. 14
Crankshaft, Piston, Camshaft, Oil. 18
Cylinder, Sump, Gasket Set. 22
Electric Starter, Flywheel, Rotating Screen. 26
Head, Intake Manifold, Valve Gasket Set. 28
Replacement Engine - US & Canada. 30

Not For Reproduction

Copyright © Briggs & Stratton. All Rights reserved

Air Cleaner, Muffler, Fuel

Mfg. No: 311777-0131-E1

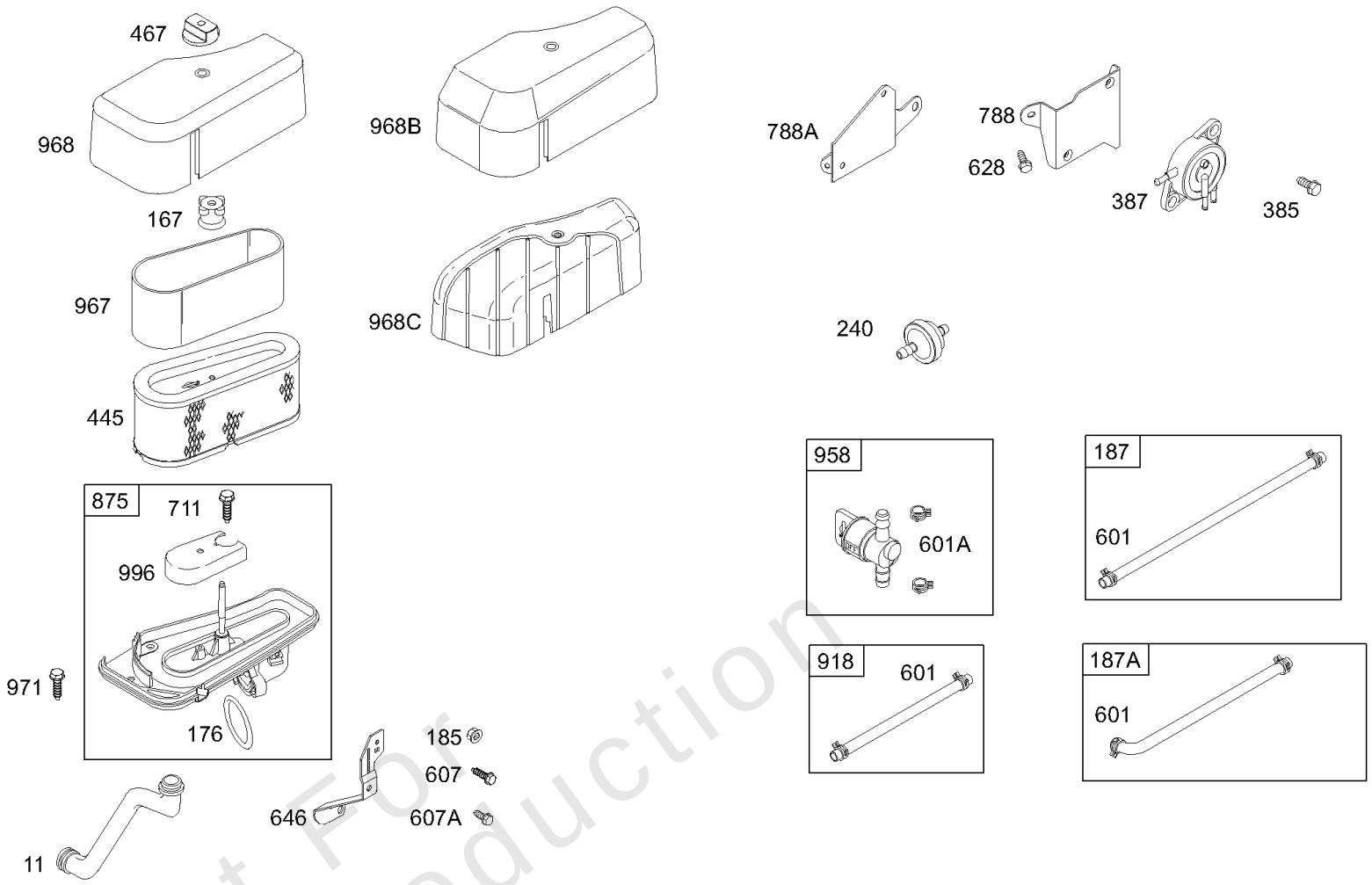

Not For Reproduction

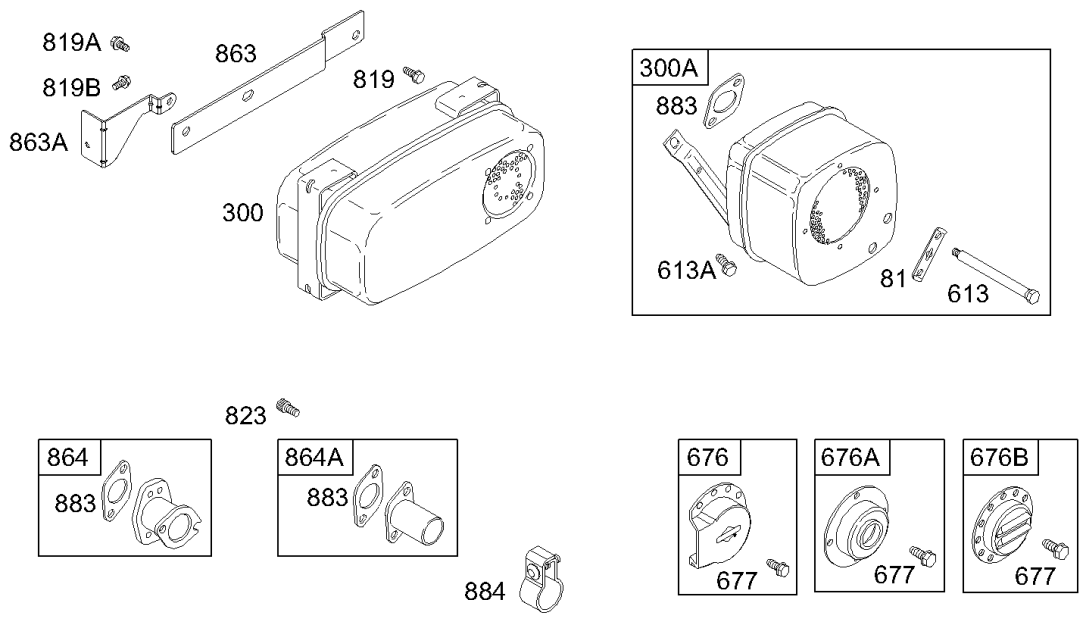

Copyright © Briggs & Stratton. All Rights reserved

Air Cleaner, Muffler, Fuel

REF NO	PART NO	QTY	DESCRIPTION
11	691328		TUBE, Breather
167	692297		SEAL-A/C NUT
176	691917		SEAL, O-Ring -(Air Cleaner Base)
185	690958		NUT -(Air Cleaner Base)
187	691050		LINE, Fuel -(Cut To Required Length)
240	298090S		FILTER, Fuel -(Red)
240	394358S		FILTER, Fuel -(White)
300	690850		MUFFLER
300A	496022S		MUFFLER
385	691108		SCREW -(Fuel Pump)
387	808656		PUMP, Fuel
445	496894S		FILTER-A/C CARTRIDGE
467	691668		KNOB, Air Cleaner Cover
601	95162S		CLAMP, Hose
601A	691038		CLAMP, Hose
607	690703		SCREW -(Air Cleaner Brace)
607A	691693		SCREW -(Air Cleaner Brace)
613	691416		SCREW -(Muffler)
613A	691678		SCREW -(Muffler)
628	690661		SCREW -(Fuel Pump Bracket)
646	690460		BRACE, Air Cleanr
676	393761		DEFLECTOR, Muffler -(Side Outlet)
676A	396903		DEFLECTOR, Muffler -(Direct Out)
676B	397630		DEFLECTOR, Muffler -(Louvered Outlet) (Louvered)
677	690661		SCREW -(Muffler Deflector)
711	690703		SCREW -(Carburetor Shield)
788	692133		BRACKET, Fuel Pump
819	690297		SCREW -(Muffler Bracket)
819A	691678		SCREW -(Muffler Bracket)
819B	691676		SCREW -(Muffler Bracket)
823	698941		SCREW -(Muffler Adapter)
863	691204		BRACKET, Muffler
863A	691205		BRACKET, Muffler
864	697346		ADAPTER, Muffler
864A	496750		ADAPTER, Muffler
875	696129		BASE, Air Cleaner -(Plastic)

Not For Reproduction

Copyright © Briggs & Stratton. All Rights reserved

Air Cleaner, Muffler, Fuel

Mfg. No: 311777-0131-E1

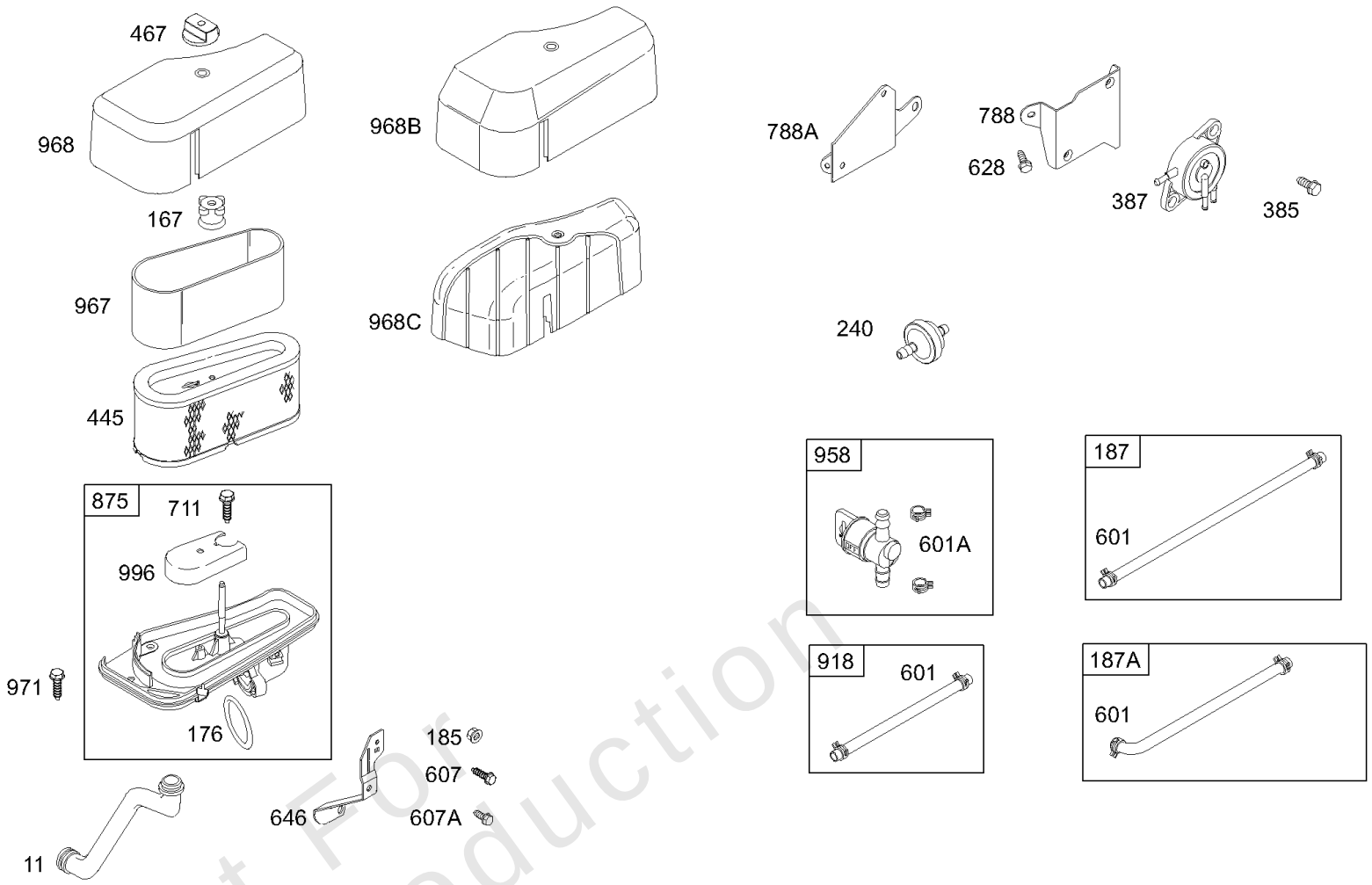

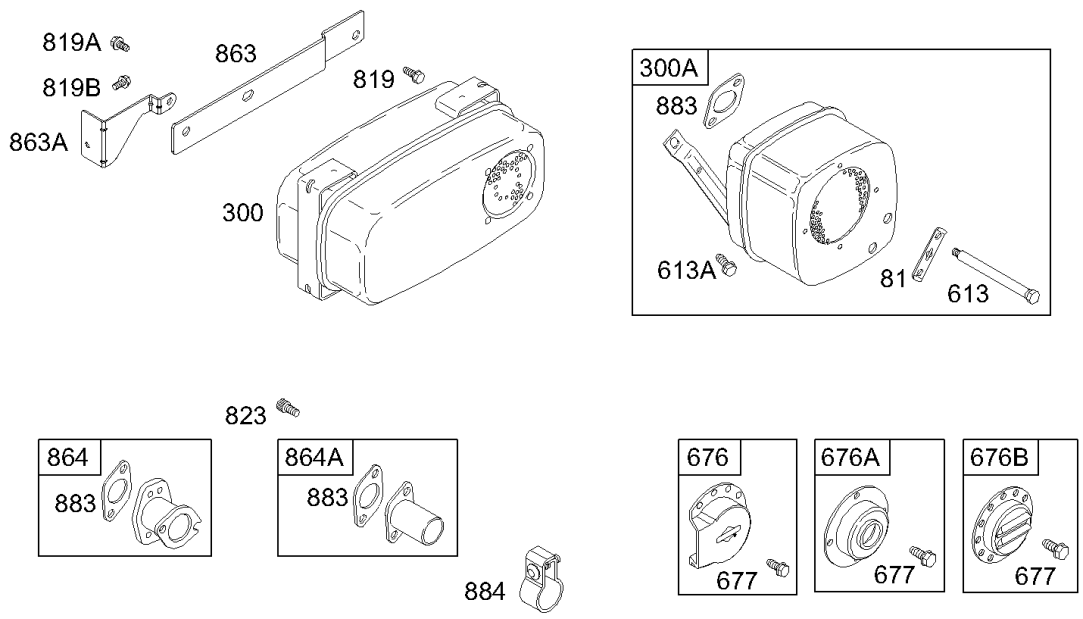

Not For Reproduction

Air Cleaner, Muffler, Fuel

REF NO	PART NO	QTY	DESCRIPTION
883	692236		GASKET, Exhaust
884	690853		CLAMP, Muffler
918	393815		HOSE, Vacuum -(Cylinder To Impulse Pump)(Cut To Required Length)
967	272403S		FILTER-PRE CLEANER
968B	691332		COVER, Air Cleaner
968C	692502		COVER, Air Cleaner
971	692129		SCREW -(Air Cleaner Base to Carburetor)
996	690678		SHIELD, Carburetor

Not For Reproduction

Copyright © Briggs & Stratton. All Rights reserved

Alternator, Control Bracket, Ignition

Mfg. No: 311777-0131-E1

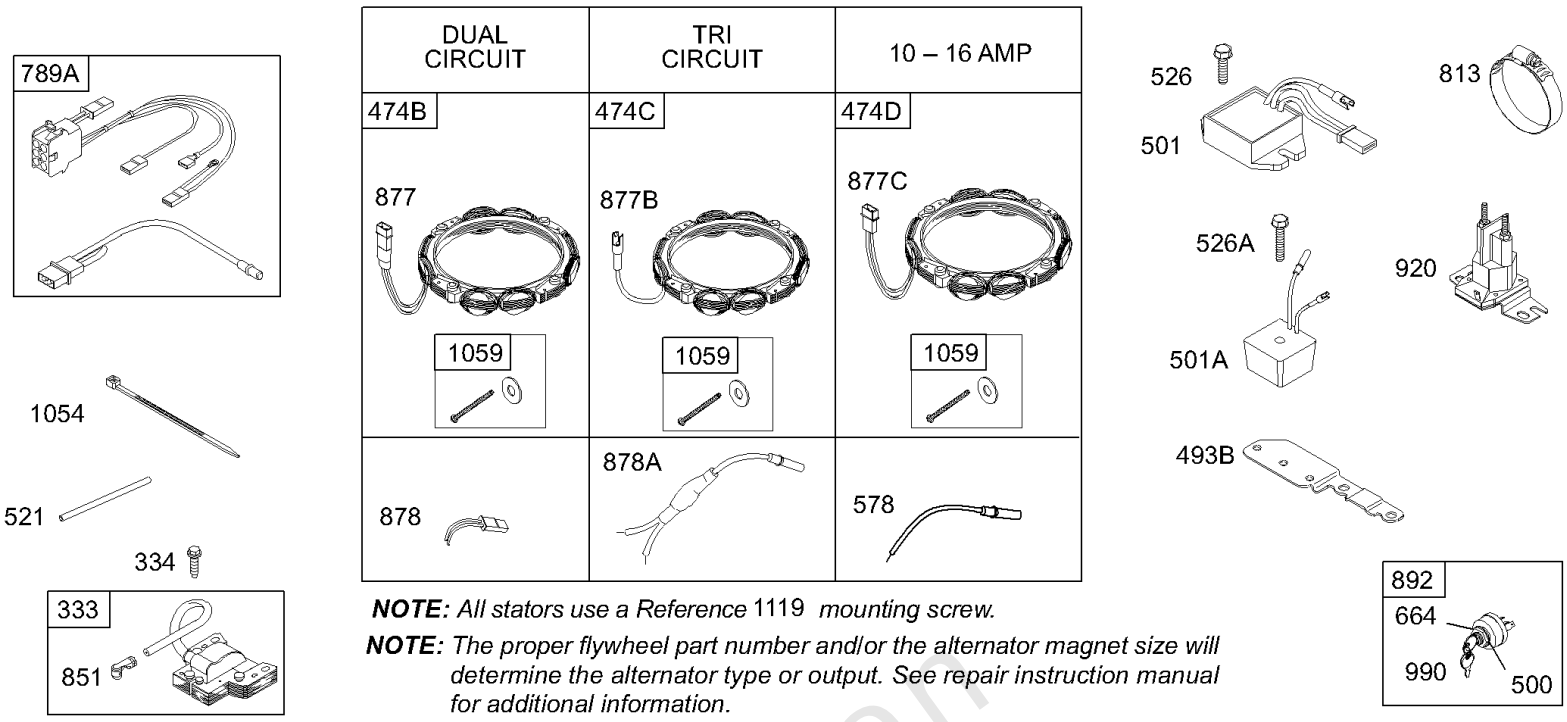

NOTE: *All stators use a Reference* 1119 *mounting screw.*

NOTE: *The proper flywheel part number and/or the alternator magnet size will determine the alternator type or output. See repair instruction manual for additional information.*

Not For Reproduction

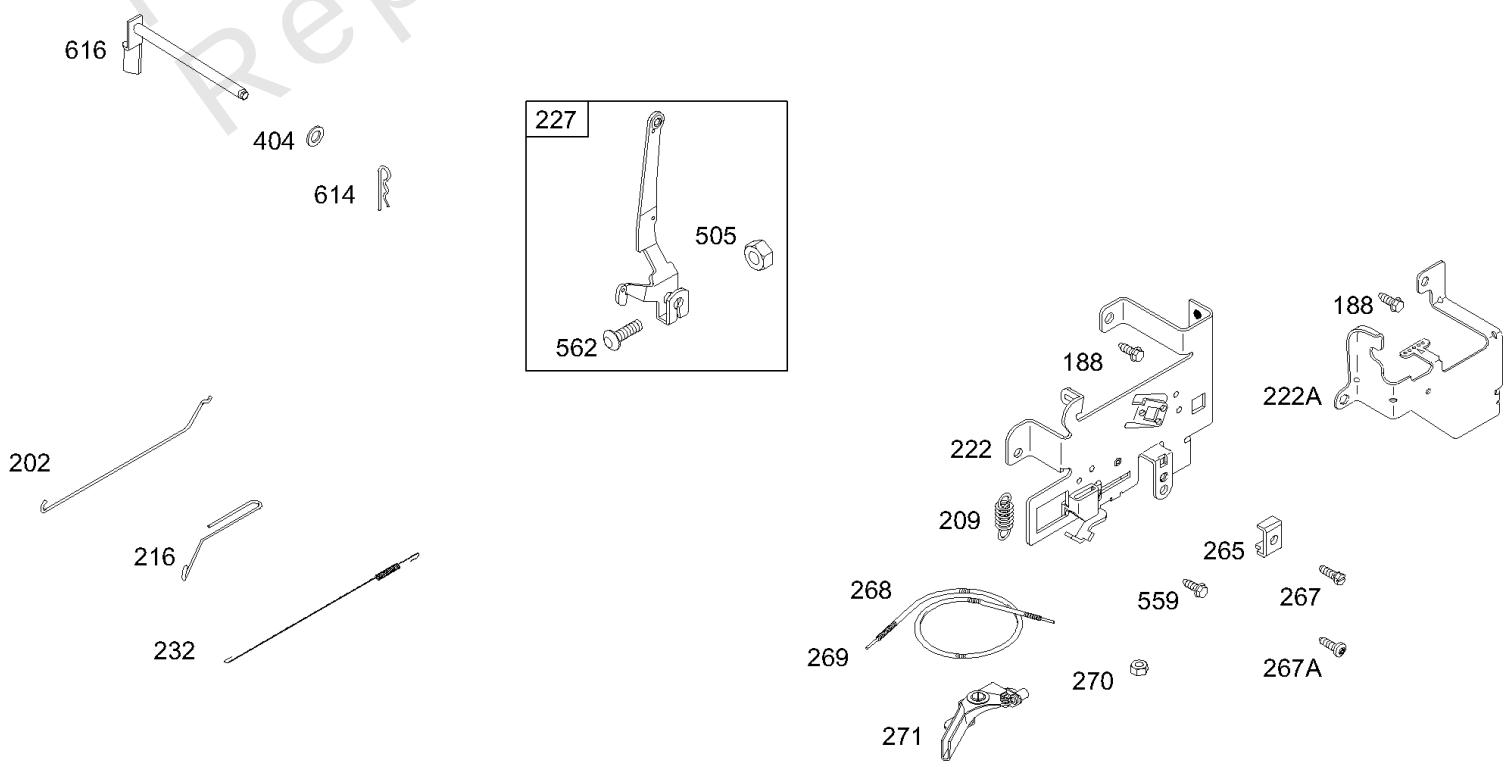

Alternator, Control Bracket, Ignition

REF NO	PART NO	QTY	DESCRIPTION
188	691693		SCREW -(Control Bracket)
202	691841		LINK, Mechanical Governor
209	692208		SPRING, Governor -(Green)
216	691840		LINK, Choke
222	694042		BRACKET, Control
227	691374		LEVER, Governor Control
232	691842		SPRING, Governor Link
265	691024		CLAMP, Casing
267	690804		SCREW -(Casing Clamp)
268	691025		CASING, Control Wire -(Cut To Required Length)
269	691026		WIRE, Control -(Cut To Required Length)
270	691027		NUT -(Control Wire Casing)
271	691028		LEVER, Control
333	492341		ARMATURE, Magneto
334	691061		SCREW -(Magneto Armature)
404	691691		WASHER -(Governor Crank)
474D	696458		ALTERNATOR -(10 and 16 Amp Regulated)
493B	694475		BRACKET, Mounting -(Alternator)
500	691086		WASHER -(Key Switch)
501	691185		REGULATOR -(16 Amp Regulated)
501A	691188		REGULATOR -(9 Amp Regulated)
505	691251		NUT -(Governor Control Lever)
521	690581		SHIELD, Cable
526	692598		SCREW -(Regulator)
526A	694476		SCREW -(Regulator)
559	693675		SCREW -(Remote Choke Stop)
562	691119		BOLT -(Governor Control Lever)
578	692306		WIRE ASSEMBLY
614	691620		PIN, Cotter
616	692012		CRANK, Governor
664	691087		NUT -(Key Switch)
813	690635		CLAMP -Used Before Code Date 99070600
851	692424		TERMINAL, Spark Plug
877	393456		WIRE/CONNECTOR, Alternator -(Dual Circuit)
877B	393537		WIRE/CONNECTOR, Alternator -(Tri Circuit)
877C	399916		WIRE/CONN-ALTERNATOR -(10 and 16 Amp Regulated)

Not For Reproduction

Copyright © Briggs & Stratton. All Rights reserved

Alternator, Control Bracket, Ignition

Mfg. No: 311777-0131-E1

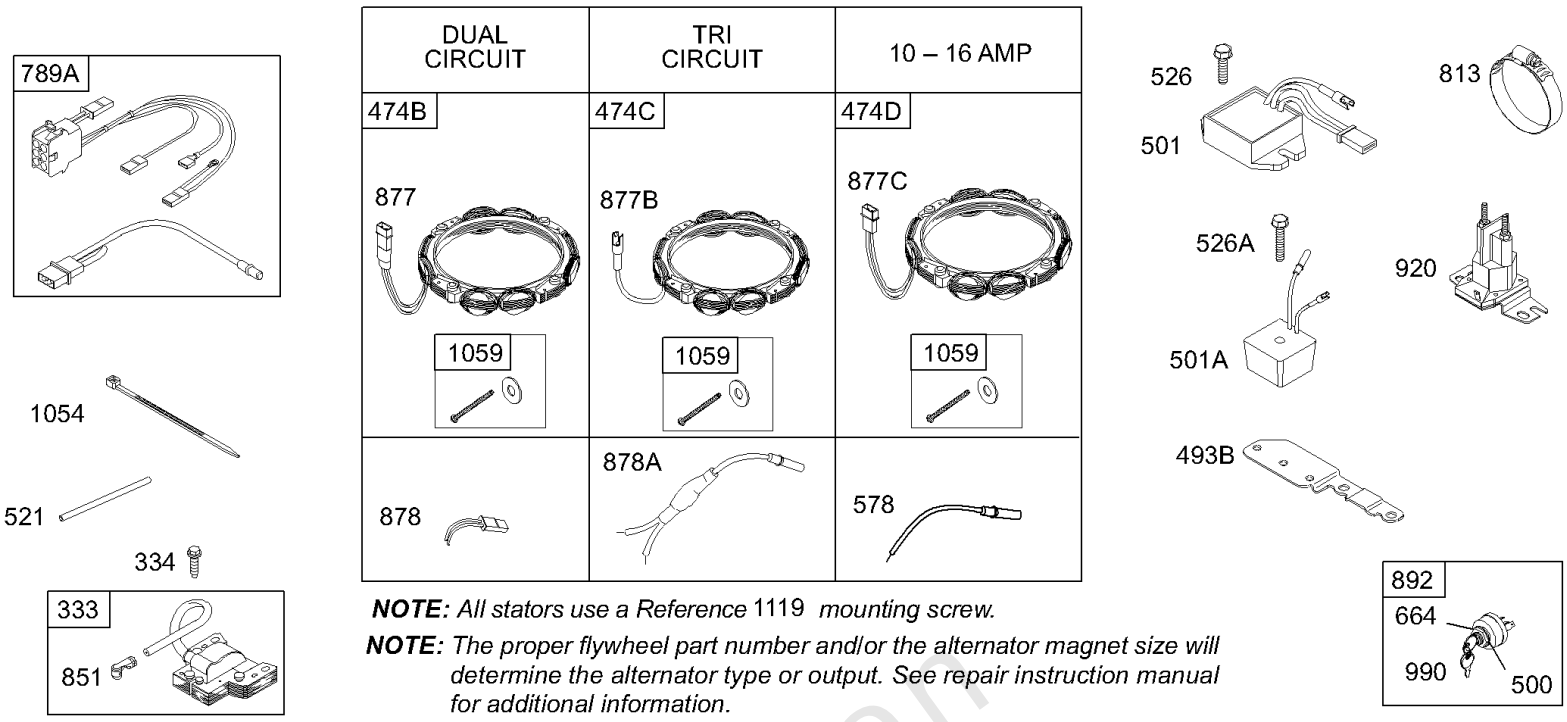

NOTE: *All stators use a Reference* 1119 *mounting screw.*

NOTE: *The proper flywheel part number and/or the alternator magnet size will determine the alternator type or output. See repair instruction manual for additional information.*

Not For Reproduction

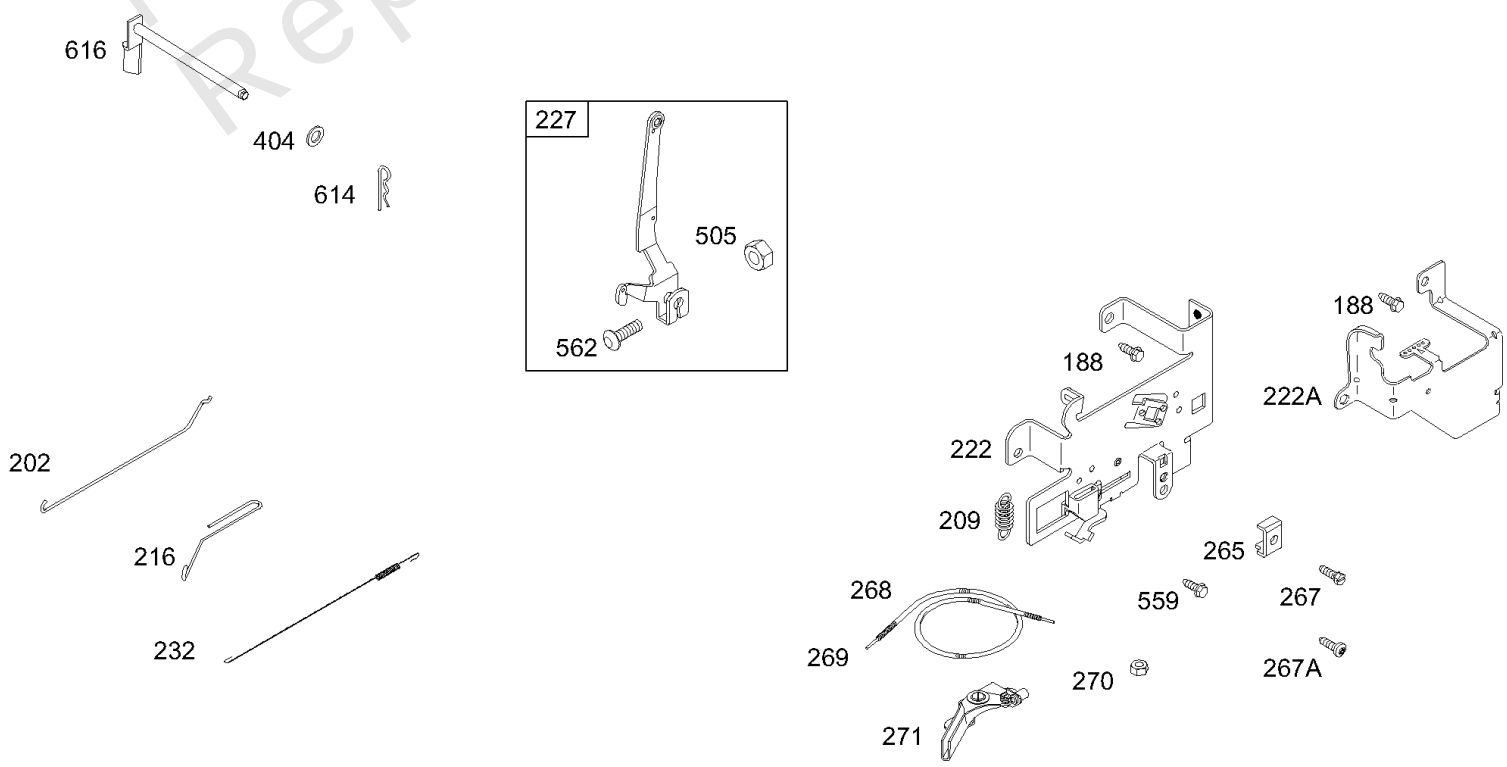

Alternator, Control Bracket, Ignition

REF NO	PART NO	QTY	DESCRIPTION
878	691237		HARNESS, Alternator -(Dual Circuit)
878A	691955		HARNESS, Alternator -(Tri Circuit)
892	692318		SWITCH, Key
990	691959		SET, Key
1054	280275		TIE, Cable
1059	698516		KIT, Screw/Washer
1119	691183		SCREW -(Alternator)

Not For Reproduction

Blower Housing, Blower Housing Cover

Mfg. No: 311777-0131-E1

1019 LABEL KIT

1036 EMISSIONS LABEL

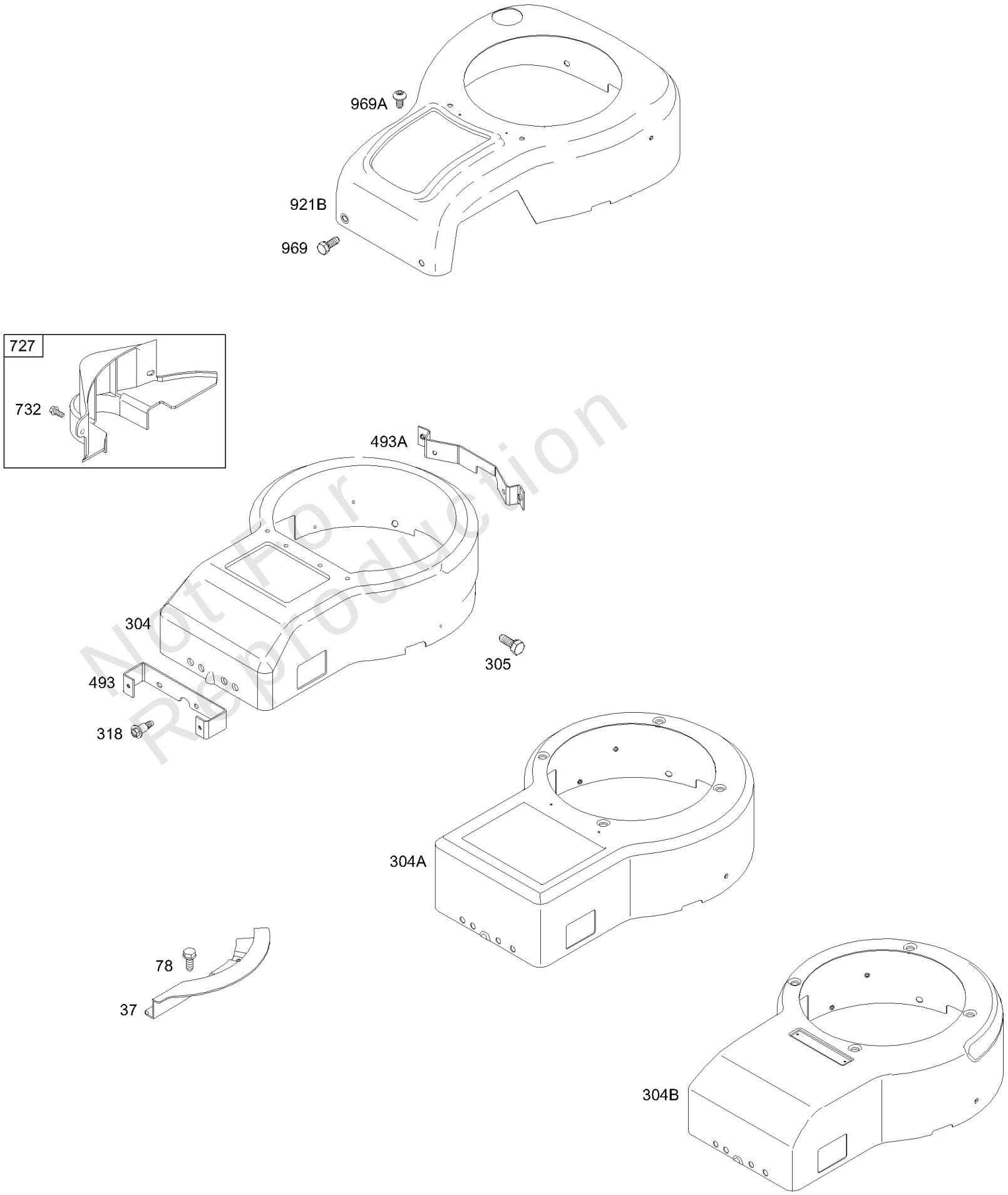

Not For Reproduction

Copyright © Briggs & Stratton. All Rights reserved

Blower Housing, Blower Housing Cover

REF NO	PART NO	QTY	DESCRIPTION
37	690456		GUARD, Flywheel
78	697561		SCREW -(Flywheel Guard)
304	690497		HOUSING, Blower -(Black)
305	691108		SCREW -(Blower Housing)
318	692127		SCREW -(Mounting Bracket)
493	690493		BRACKET-MOUNTING -(Blower Housing Front)
493A	690494		BRACKET, Mounting -(Blower Housing Rear)
727	490324		COVER, Starter Drive -(Includes Mounting Hardware)
732	691002		SCREW -(Starter Drive Cover)
921B	692679		HOUSING, Blower -(Black)
921B	692493		HOUSING, Blower -(Red)
969	691108		SCREW -(Blower Housing Cover)
969A	690365		SCREW -(Blower Housing)
1019	690180		KIT, Label
1036	692468		LABEL-EMISSIONS -Used Before Code Date 99010100
1036	694332		LABEL, Emissions -Used After Code Date 98123100 -Used Before Code Date 99100100
1036	694997		LABEL, Emissions -Used After Code Date 99093000 -Used Before Code Date 00070100
1036	695700		LABEL, Emissions -Used After Code Date 00063000

Not For Reproduction

Copyright © Briggs & Stratton. All Rights reserved

WALBRO

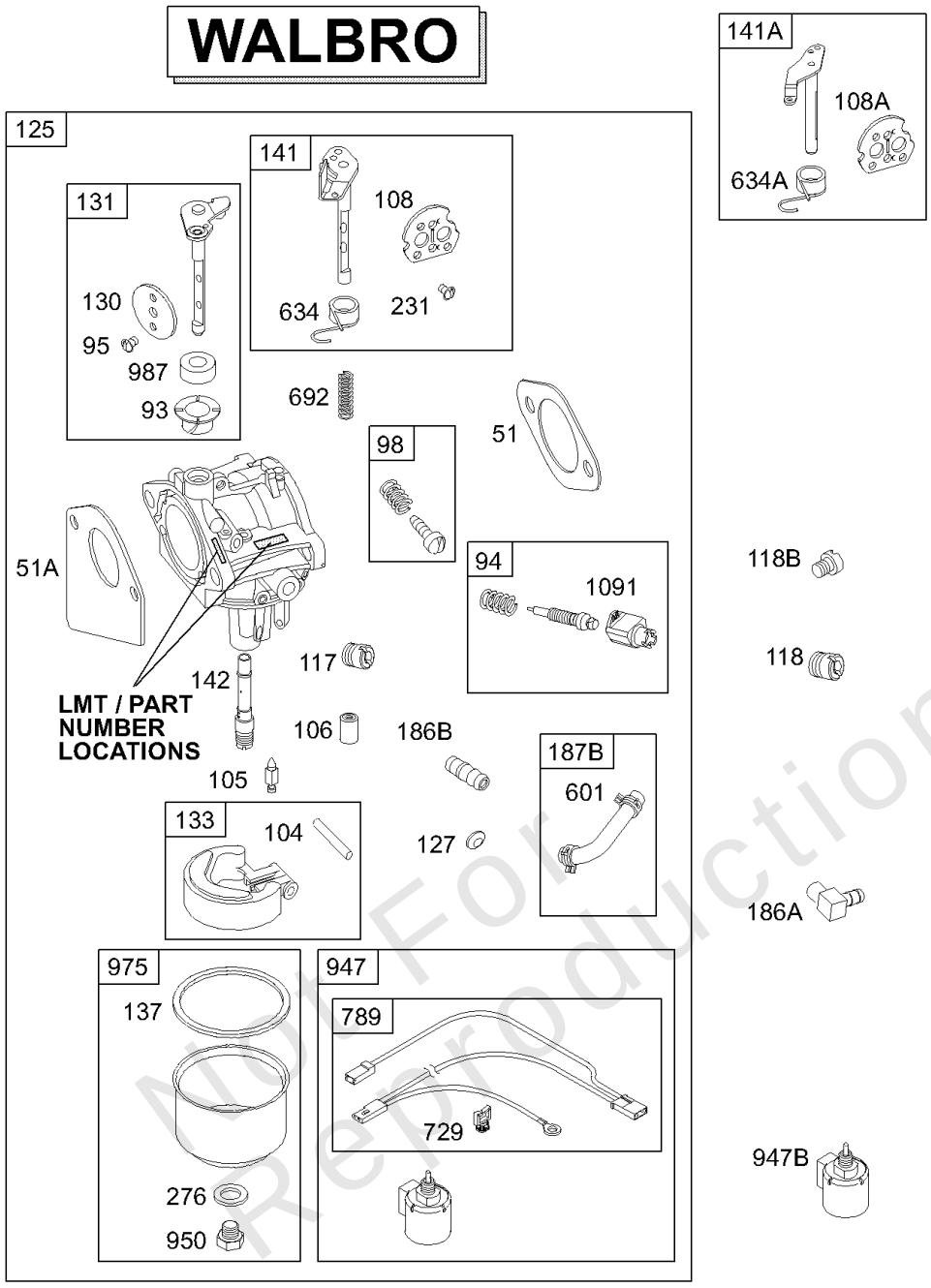

NIKKI

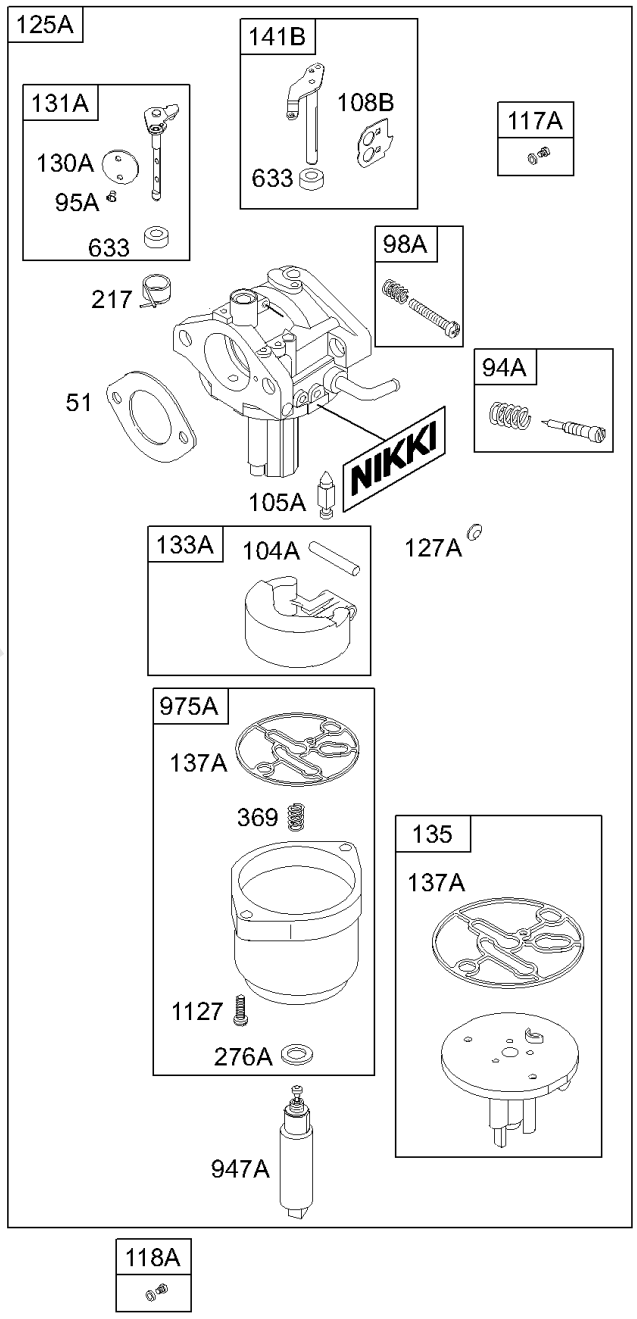

121 CARBURETOR OVERHAUL KIT

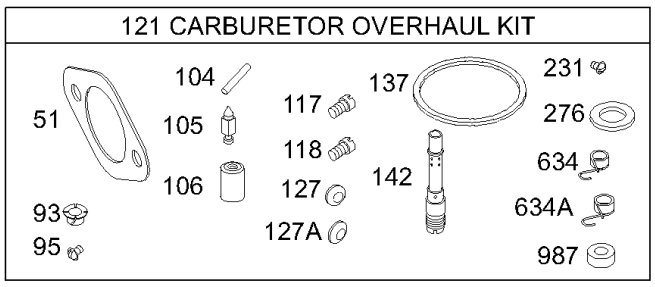

977 CARBURETOR GASKET SET

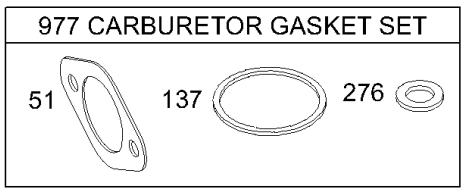

121A CARBURETOR OVERHAUL KIT

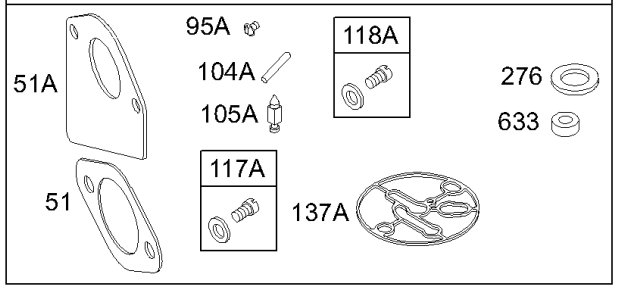

977A CARBURETOR GASKET SET

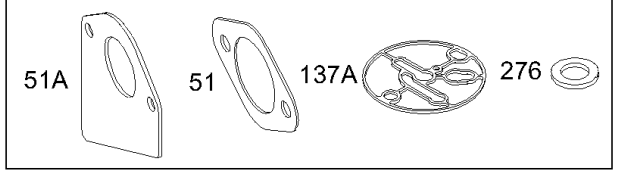

Not For Reproduction

Carburetor, Overhaul Set

REF NO	PART NO	QTY	DESCRIPTION
51	692137		GASKET-INTAKE
51A	692284		GASKET, Intake
93	690602		BUSHING, Throttle Shaft
94	498030		KIT, Idle Mixture -(Lmt 153154,155,156)
94A	695425		KIT, Idle Mixture
95	691636		SCREW -(Throttle Valve)
95A	690718		SCREW -(Throttle Valve)
98	495800		KIT, Idle Speed -(Idle Speed) (Lmt 54, 55, 91)
98A	695408		KIT, Idle Speed
104	690525		PIN, Float Hinge
104A	694918		PIN, Float Hinge
105	231855S		VALVE-FLOAT NEEDLE
105A	694922		VALVE, Float Needle
106	690577		SEAT, Inlet -(LMT 154, 155 and Carburetors 498888, 697481 And 697482)
106	691780		SEAT, Inlet -(LMT 153, 156, 697480, 697483)
108	690464		VALVE, Choke -(LMT 153, 156, 697480, 697483)
108A	692344		VALVE, Choke -(LMT 154, 155 and Carburetors 697481 And 697482)
108B	695419		VALVE, Choke
117	692408		JET, Main -(Standard)
117A	695415		JET, Main -(Standard)
118	692411		JET, Main -(High Altitude)
118A	695416		JET, Main -(High Altitude)
121	690191		KIT, Carburetor Overhaul
121A	695427		KIT, Carburetor Overhaul
125	698782		CARBURETOR -(LMT 153, 156, 697480, 697483)
125	698620		CARBURETOR -(LMT 154, 155 and Carburetors 498888, 697481 And 697482)
125A	-----		Carburetor -(Nikki Carburetor, Service With Walbro Carburetor)
127	695005		PLUG, Welch
127A	690727		PLUG, Welch
130	691750		VALVE, Throttle
130A	695418		VALVE, Throttle
131	494379		KIT, Throttle Shaft
131A	695421		KIT, Throttle Shaft
133	494381		FLOAT, Carburetor
133A	694914		FLOAT, Carburetor
135	696142		TUBE, Fuel Transfer
137	281165S		GASKET, Float Bowl
137A	695426		GASKET, Float Bowl
141	495097		KIT, Choke Shaft -(Manual Choke) (Lmt 28,31,55,91,155,156) (Manual Choke) (LMT 154, 155 and Carburetors 697481 And 697482)

Not For Reproduction

Copyright © Briggs & Stratton. All Rights reserved

Mfg. No: 311777-0131-E1

WALBRO

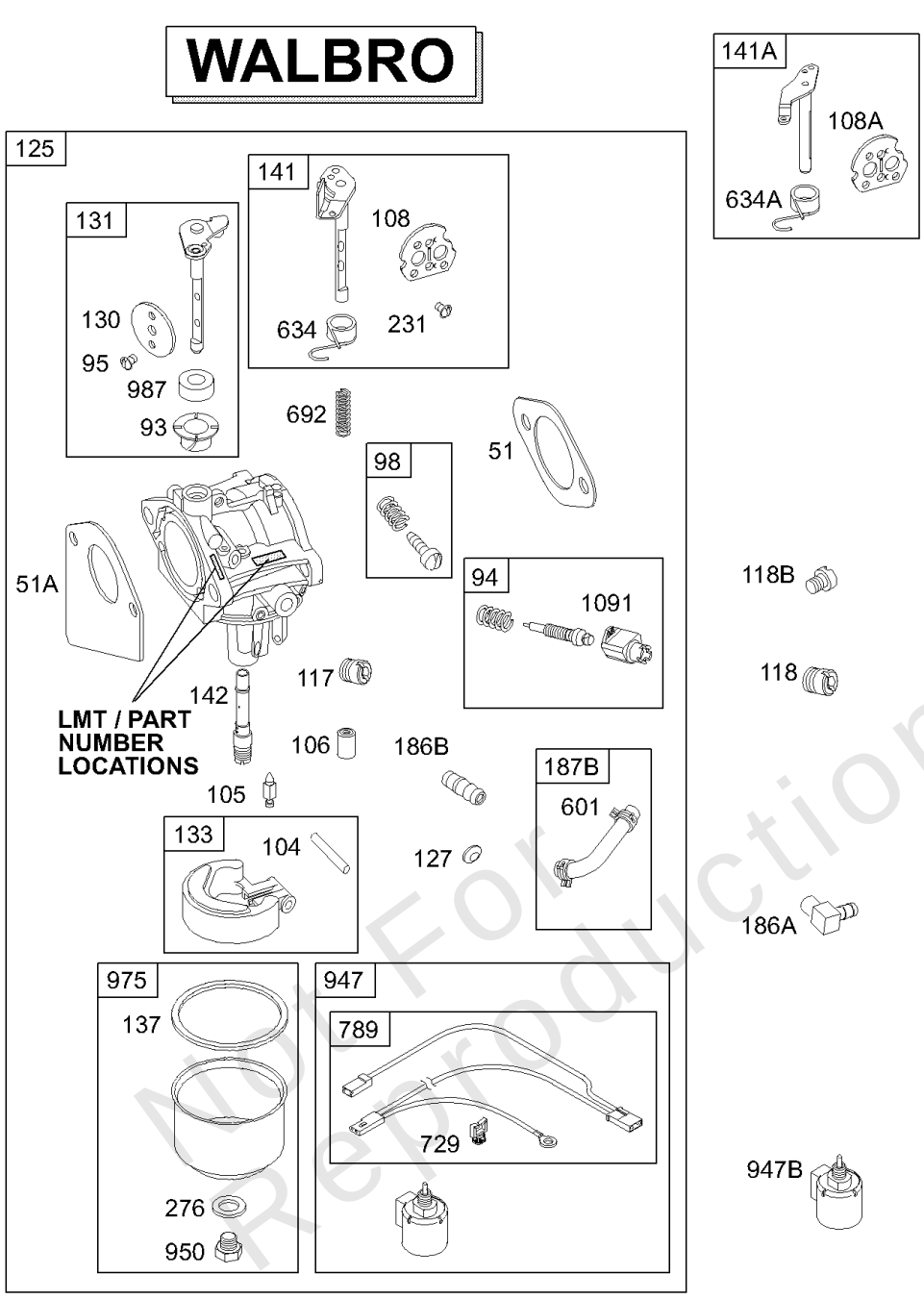

NIKKI

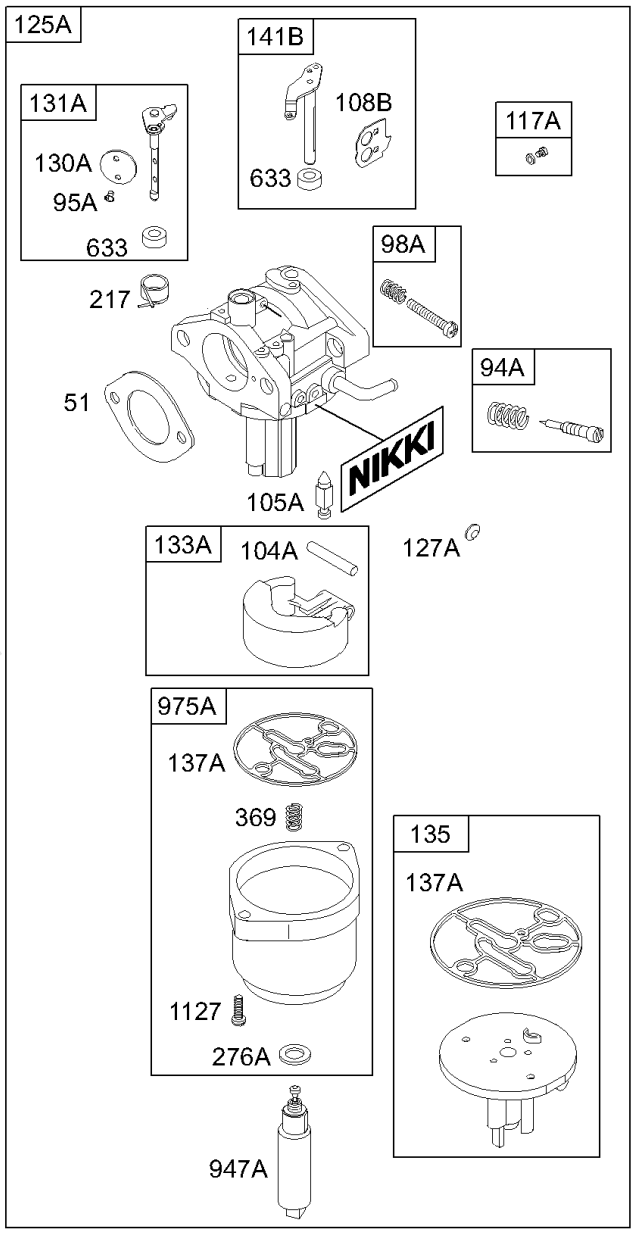

121 CARBURETOR OVERHAUL KIT

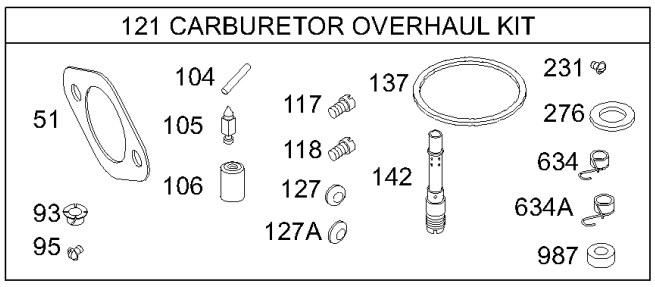

121A CARBURETOR OVERHAUL KIT

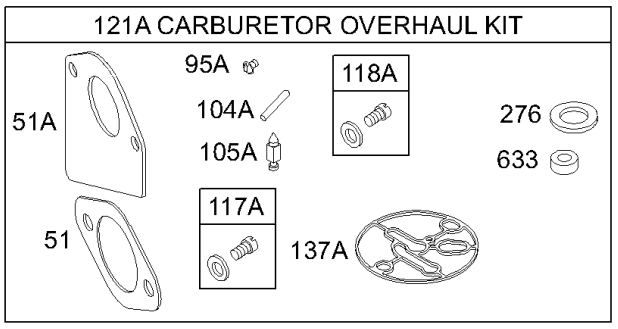

977 CARBURETOR GASKET SET

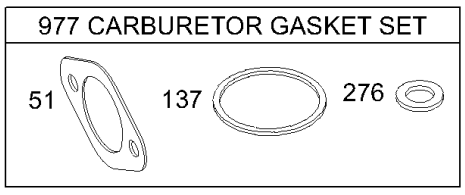

977A CARBURETOR GASKET SET

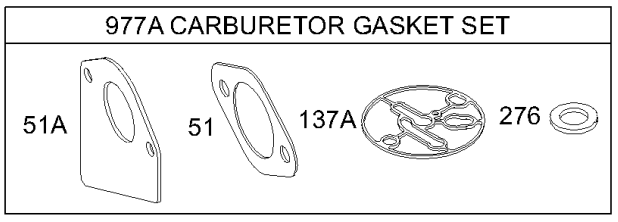

Not For Reproduction

Carburetor, Overhaul Set

REF NO	PART NO	QTY	DESCRIPTION
141A	495931		KIT, Choke Shaft -(Choke-A-Matic) (LMT 153, 156, 697480, 697483)
141B	695420		KIT, Choke Shaft
142	692412		NOZZLE, Carburetor -(Standard)
186A	692317		CONNECTOR-HOSE -(Carburetor)
186B	698174		CONNECTOR, Hose -(Carburetor)
217	695409		SPRING, Choke Return
231	691636		SCREW -(Throttle Valve) (Choke Valve)
276	692255		WASHER, Sealing
276A	695410		WASHER, Sealing
369	695422		SPRING, Float Bowl
601	95162S		CLAMP, Hose
633	695414		SEAL, Choke/Throttle Shaft
634	690801		SPRING/SEAL ASSEMBLY -(LMT 153, 156, 697480, 697483)
634A	690802		SPRING/SEAL ASSEMBLY -(LMT 154, 155 and Carburetors 697481 And 697482)
692	690572		SPRING, Detent
729	691335		CLIP, Wire
789	692037		HARNESS-WIRING
947	692734		SOLENOID, Fuel
947A	695423		SOLENOID, Fuel
950	691657		SCREW -(Float Bowl)
975	495933		BOWL, Float -(Float Bowl)
975A	695417		BOWL, Float
977	690192		SET, Carburetor Gasket
977A	695428		SET, Carburetor Gasket
987	691326		SEAL, Choke/Throttle Shaft
1091	691333		CAP, Limiter
1127	695407		SCREW -(Float Bowl)

Not For Reproduction

Copyright © Briggs & Stratton. All Rights reserved

Mfg. No: 311777-0131-E1

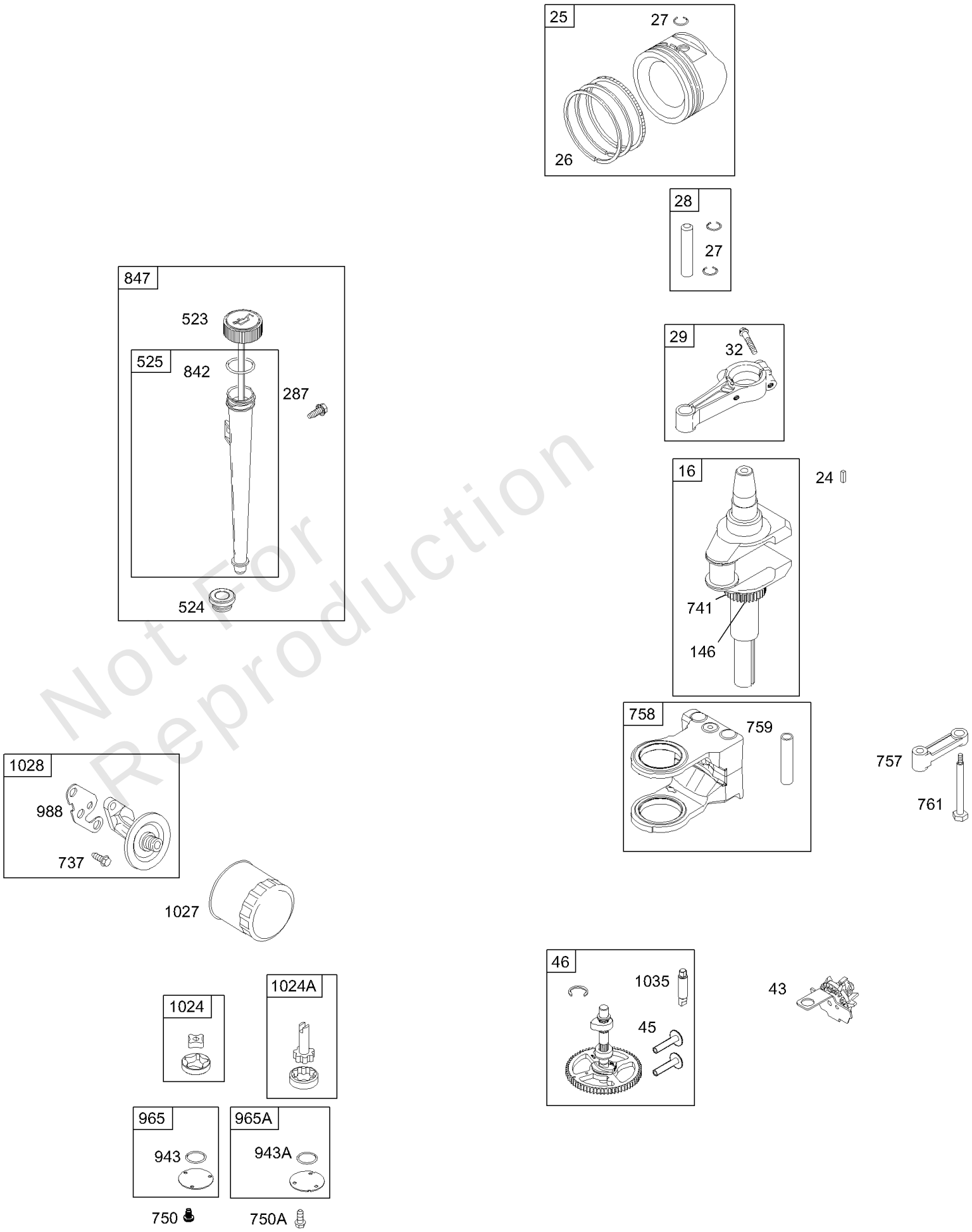

Not For Reproduction

Copyright © Briggs & Stratton. All Rights reserved

REF NO	PART NO	QTY	DESCRIPTION
16	690136		CRANKSHAFT
24	222698S		KEY, Flywheel
25	692273		PISTON ASSEMBLY -(.020 Oversize)
25	692271		PISTON ASSEMBLY -(Standard)
25	692274		PISTON ASSEMBLY -(.030 Oversize)
26	690168		SET, Ring -(.030 Oversize)
26	690162		SET, Ring -(Standard)
26	690164		SET, Ring -(.010 Oversize)
26	690166		SET, Ring -(.020 Oversize)
27	691299		LOCK, Piston Pin
28	498320		PIN, Piston -(.005 Oversize)
28	498319		PIN, Piston -(Standard)
29	692420		ROD, Connecting -(.020 Undersize)
29	692419		ROD, Connecting -(Standard)
32	692852		SCREW -(Connecting Rod)
43	691968		SLINGER, Governor/Oil
45	690564		TAPPET, Valve
46	698492		CAMSHAFT -Used After Code Date 02111700
46	790340		CAMSHAFT -Used Before Code Date 02111800
146	691639		KEY, Woodruff
287	691002		SCREW -(Dipstick Tube)
523	692014		DIPSTICK
524	281370S		SEAL, Dipstick Tube -(Dipstick Tube)
525	691398		TUBE, Dipstick
737	691118		SCREW -(Oil Filter Adapter)
741	691284		GEAR, Timing
750	691033		SCREW -(Oil Pump Cover) -Used After Code Date 98063000
750A	691108		SCREW -(Oil Pump Cover) -Used Before Code Date 98070100
757	691714		LINK, Counterweight -(-Used After Code Date 78100411)
758	692423		COUNTERWEIGHT
759	691239		PIN, Counterweight
761	691096		SCREW -(Counterweight)
842	691870		SEAL, O-Ring -(Dipstick Tube)

Not For Reproduction

Copyright © Briggs & Stratton. All Rights reserved

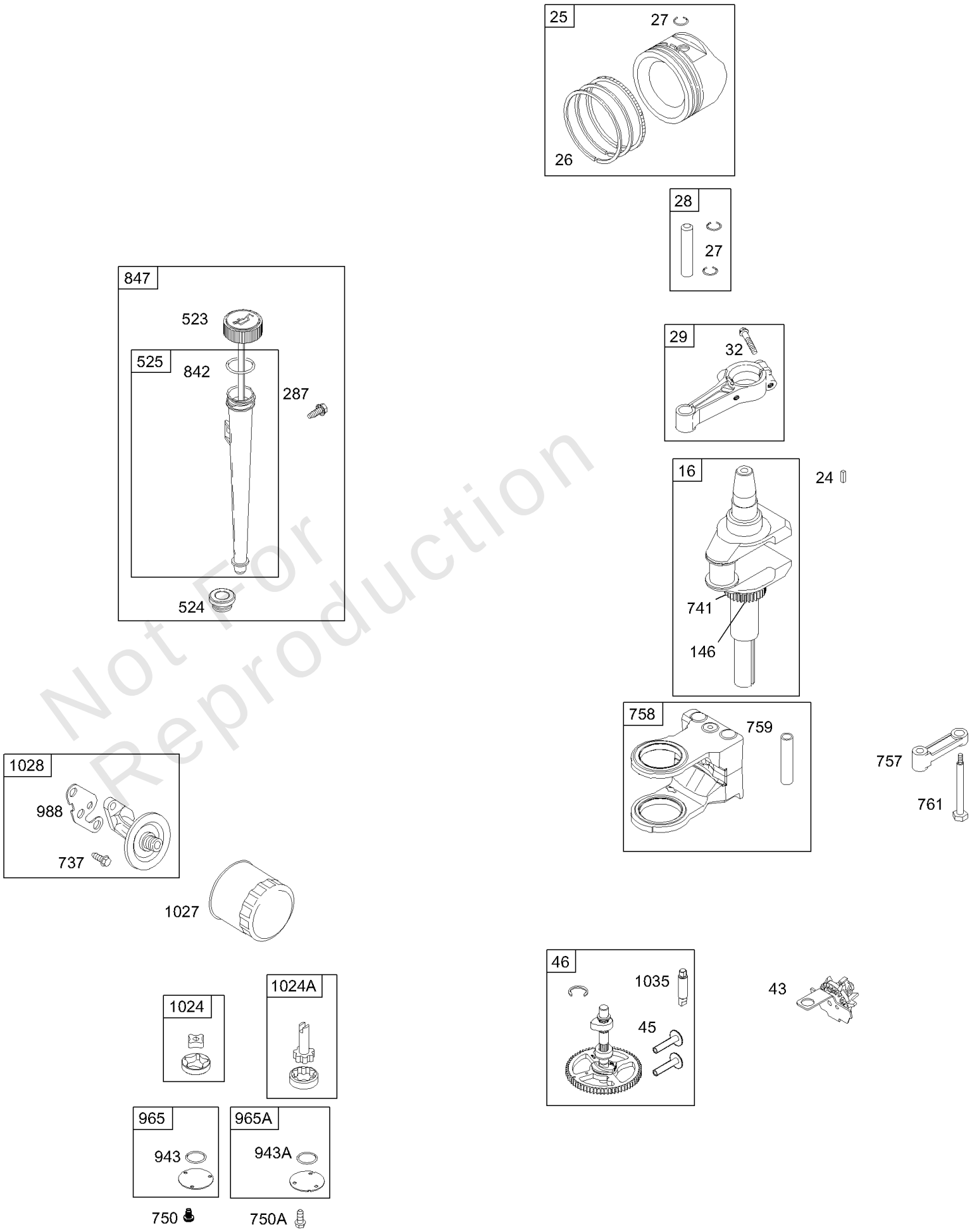

Not For Reproduction

REF NO	PART NO	QTY	DESCRIPTION
847	496415		DIPSTICK/TUBE ASSEMBLY
943	690589		SEAL, O-Ring -(Oil Pump Cover) -Used After Code Date 98063000
943A	690604		SEAL, O-Ring -(Oil Pump Cover) -Used Before Code Date 98070100
965	499613		COVER, Oil Pump -Used After Code Date 98063000
965A	496745		COVER, Oil Pump -Used Before Code Date 98070100
988	691317		GASKET, Oil Adapter
1024	499054		PUMP, Oil -Used After Code Date 98063000
1024A	493884		PUMP-OIL -Used Before Code Date 98070100
1027	492932S		FILTER, Oil
1028	496744		ADAPTER, Oil Filter
1035	693784		SHAFT, Pump

Not For Reproduction

Copyright © Briggs & Stratton. All Rights reserved

Cylinder, Sump, Gasket Set

Mfg. No: 311777-0131-E1

1058 OPERATOR'S MANUAL

1330 REPAIR MANUAL

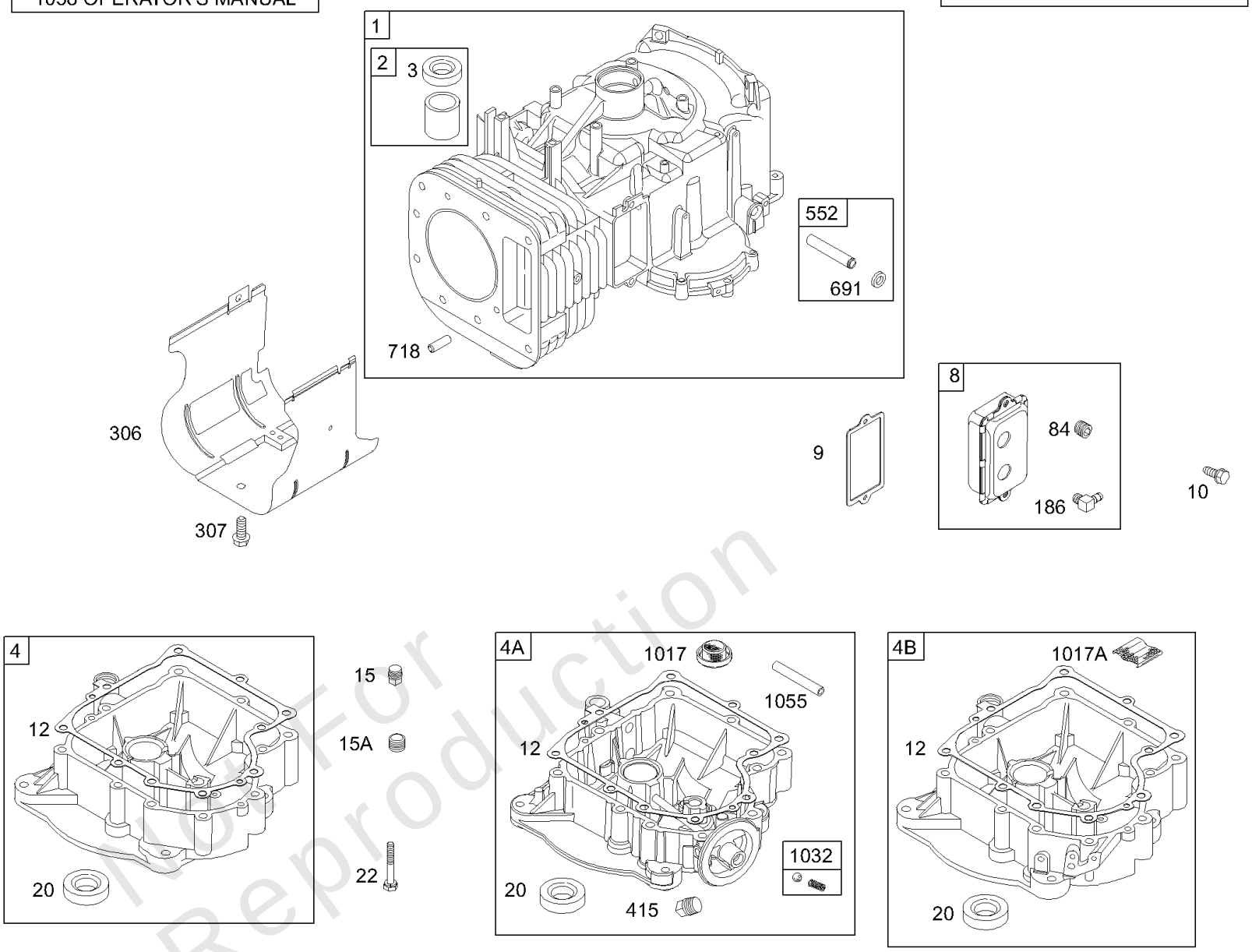

Not For Reproduction

358 ENGINE GASKET KIT

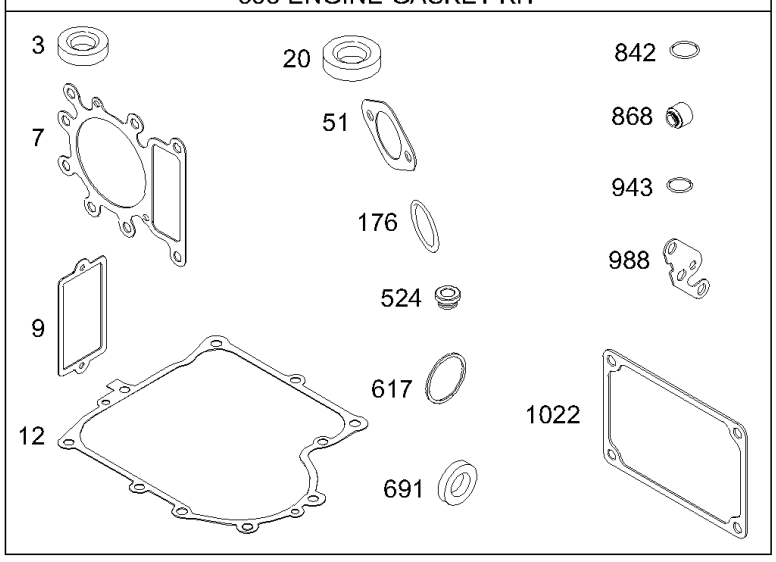

Copyright © Briggs & Stratton. All Rights reserved

Cylinder, Sump, Gasket Set

REF NO	PART NO	QTY	DESCRIPTION
1	690156		CYLINDER ASSEMBLY
2	399265		KIT, Bushing/Seal -(Magneto Side)
3	391086S		SEAL, Oil -(Magneto Side)
4A	693582		SUMP, Engine -Used After Code Date 98063000
4B	496742		SUMP, Engine -Used Before Code Date 98070100
7	699168		GASKET, Cylinder Head
8	696126		BREATHER ASSEMBLY
9	27803S		GASKET, Breather
10	691666		SCREW -(Breather Assembly)
12	692406		GASKET, Crankcase -(.005)
12	692405		GASKET, Crankcase -(.009)
12	692226		GASKET, Crankcase -(.015)(Standard)
15	690946		PLUG, Oil Drain -(Standard)
15A	691680		PLUG, Oil Drain -(Flush)
20	291675S		SEAL, Oil -(PTO Side)
22	692125		SCREW -(Crankcase Cover/Sump)
51	692137		GASKET-INTAKE
84	690343		PLUG, Oil Drain
176	691917		SEAL, O-Ring -(Air Cleaner Base)
186	691609		CONNECTOR, Hose -(Breather Assembly)
306	698454		SHIELD-CYLINDER
307	691003		SCREW -(Cylinder Shield)
358	690189		GASKET SET, Engine
415	690283		PLUG, Oil -(Used in Engine Sump as Oil Pressure Switch Plug and Intake Manifold asVacuum Plug)
524	281370S		SEAL, Dipstick Tube -(Dipstick Tube)
552	491986		BUSHING, Governor Crank -(1/4 I.D.)
617	692138		SEAL, O-Ring -(Intake Manifold)
691	692407		SEAL, Governor Shaft
718	690959		PIN, Locating
842	691870		SEAL, O-Ring -(Dipstick Tube)
868	690968		SEAL, Valve
943	690589		SEAL, O-Ring -(Oil Pump Cover) -Used After Code Date 98063000
988	691317		GASKET, Oil Adapter
1017	690770		SCREEN, Oil Pump -Used After Code Date 98063000

Not For Reproduction

Copyright © Briggs & Stratton. All Rights reserved

Cylinder, Sump, Gasket Set

Mfg. No: 311777-0131-E1

1058 OPERATOR'S MANUAL

1330 REPAIR MANUAL

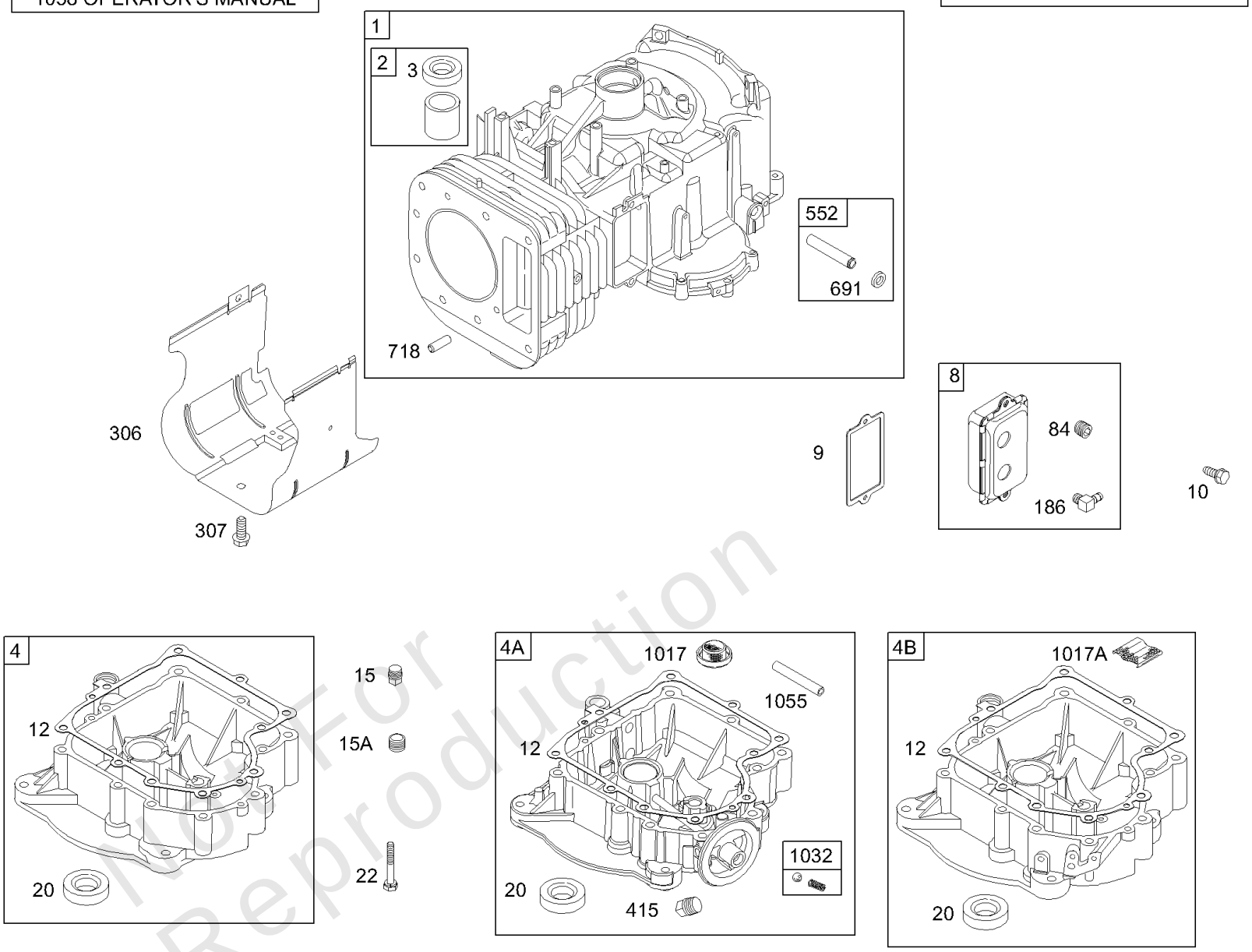

Not For Reproduction

358 ENGINE GASKET KIT

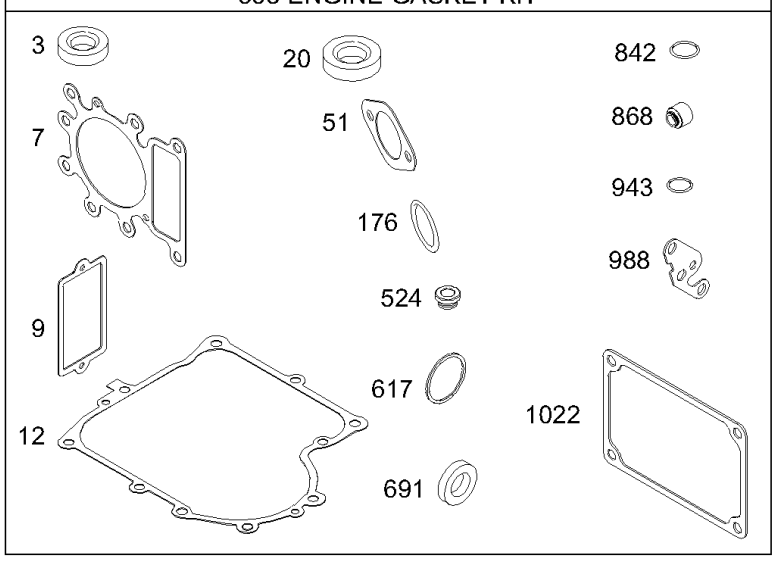

Copyright © Briggs & Stratton. All Rights reserved

Cylinder, Sump, Gasket Set

REF NO	PART NO	QTY	DESCRIPTION
1017A	691216		SCREEN, Oil Pump -Used Before Code Date 98070100
1022	272475S		GASKET, Rocker Cover
1055	690528		TUBE, Oil Pump
1058	275935		MANUAL, Operator's
1330	272147		MANUAL, Repair

Not For Reproduction

Copyright © Briggs & Stratton. All Rights reserved

Mfg. No: 311777-0131-E1

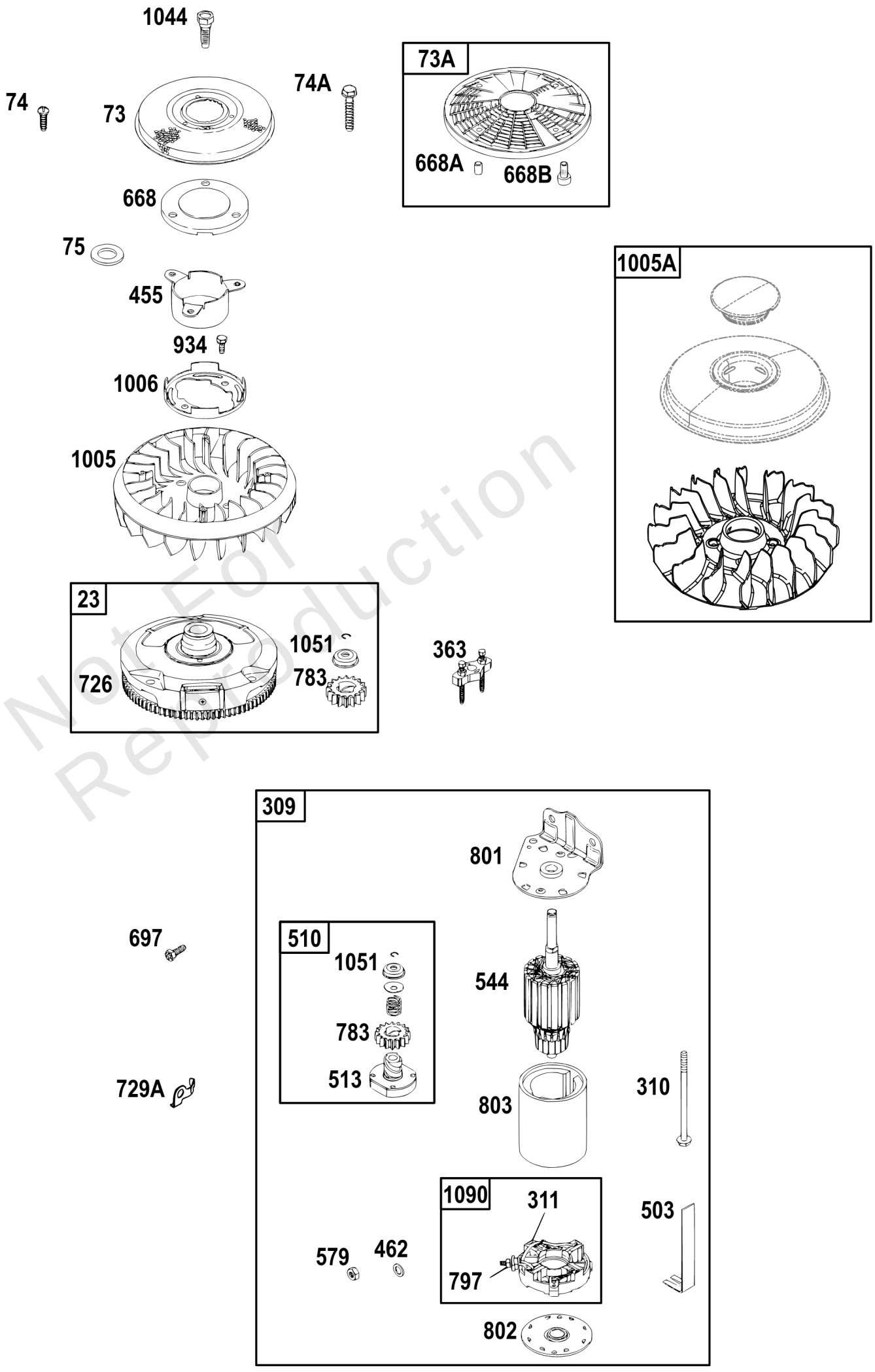

Not For Reproduction

Copyright © Briggs & Stratton. All Rights reserved

Electric Starter, Flywheel, Rotating Screen

REF NO	PART NO	QTY	DESCRIPTION
23	693556		FLYWHEEL -(Steel Ring Gear)
73A	494439		SCREEN, Rotating -(Nylon)
74A	698425		SCREW -(Rotating Screen)
75	690582		WASHER -(Flywheel)
309	693551		MOTOR, Starter
310	690323		SCREW -(Starter Motor)
311	497608		SET, Brush
363	19203		PULLER, Flywheel
455	691173		CUP, Flywheel
462	691261		WASHER -(Starter Cable)
503	691532		STRAP, Starter
510	693699		DRIVE, Starter -(Used With Steel Ring Gear)
513	692024		CLUTCH, Drive
544	692034		ARMATURE, Starter -(3 5/8 Housing)
579	691029		NUT -(Starter Cable)
668A	691215		SPACER
668B	691500		SPACER -Used Before Code Date 00040300
697	690372		SCREW -(Drive Cap)
726	-----		Gear-Ring -(Steel)(See Reference 23 for Service)
729A	691224		CLIP, Wire
783	693713		GEAR, Pinion
797	693167		NUT -(Brush Retainer)
801	691283		CAP, Drive
802	691286		CAP, End
803	693757		HOUSING, Starter -(3 5/8 Housing)
934	690372		SCREW -(Fan Retainer)
1005	697853		FAN, Flywheel -Used After Code Date 02050800
1005A	796201		FAN-FLYWHEEL
1006	690452		RETAINER, Fan
1044	698139		SCREW -(Flywheel)
1051	691265		RING, Retaining
1090	691293		RETAINER, Brush

Not For Reproduction

Head, Intake Manifold, Valve Gasket Set

Mfg. No: 311777-0131-E1

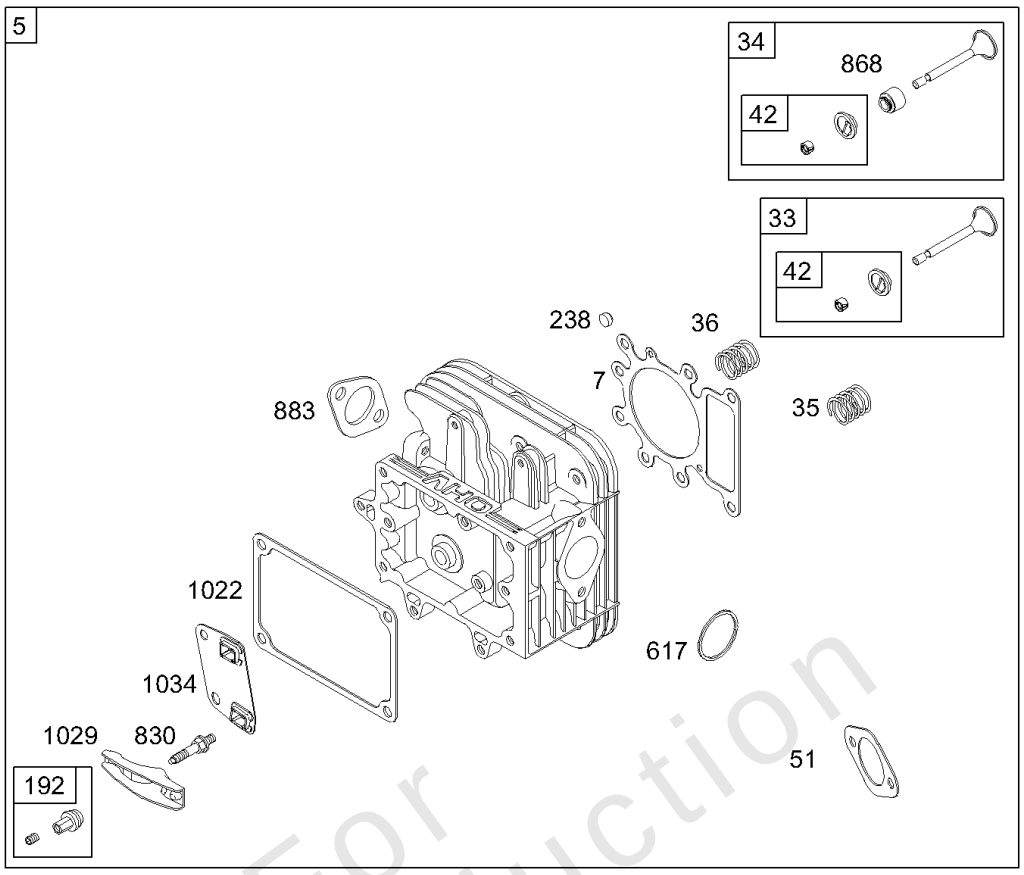

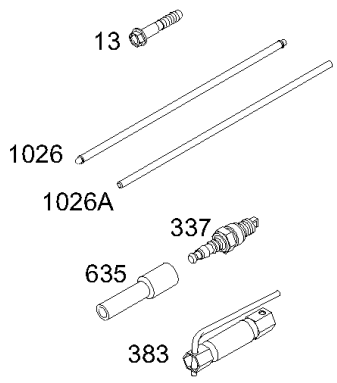

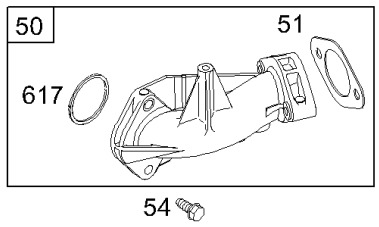

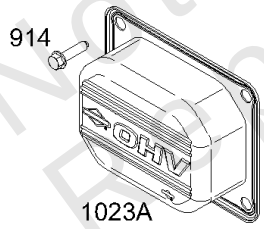

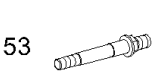

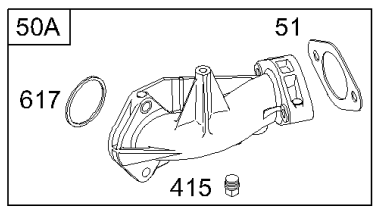

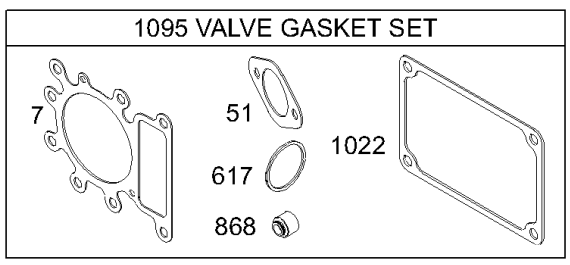

Not For Reproduction

Head, Intake Manifold, Valve Gasket Set

REF NO	PART NO	QTY	DESCRIPTION
5	698148		HEAD, Cylinder
7	699168		GASKET, Cylinder Head
13	690360		SCREW -(Cylinder Head)
33	695760		VALVE, Exhaust
34	695761		VALVE, Intake
35	691279		SPRING, Valve -(Intake)
36	691279		SPRING, Valve -(Exhaust)
42	499586		KEEPER, Valve
50	690193		MANIFOLD, Intake
51	692137		GASKET-INTAKE
53	690227		STUD -(Carburetor)
54	691148		SCREW -(Intake Manifold)
192	691986		ADJUSTER, Rocker Arm
238	691843		CAP, Valve
337	491055S		PLUG, Spark
337	84007216	1	PLUG, SPARK -(China Only)
383	89838S		WRENCH, Spark Plug
415	690283		PLUG, Oil -(Used in Engine Sump as Oil Pressure Switch Plug and Intake Manifold asVacuum Plug)
617	692138		SEAL, O-Ring -(Intake Manifold)
635	691909		BOOT, Spark Plug
830	691095		STUD, Rocker Arm
868	690968		SEAL, Valve
883	692236		GASKET, Exhaust
914	691108		SCREW -(Rocker Cover)
1022	272475S		GASKET, Rocker Cover
1023A	692492		COVER, Rocker
1026	692003		ROD, Push -(Intake)
1026A	692011		ROD, Push -(Exhaust)
1029	691751		ARM, Rocker
1034	690822		GUIDE, Push Rod
1095	690190		GASKET SET, Valve

Not For Reproduction

Copyright © Briggs & Stratton. All Rights reserved

Replacement Engine - US & Canada

REF NO	PART NO	QTY	DESCRIPTION
	31G7773036	1	Replacement Engine
	592060	1	Replacement Short Block
	-----		Top No-Load Speed: 3300 -Trim: ALL
	-----		Service Note: If the original engine is equipped with a Six Pin Wiring Harness transfer to the replacement engine.
	-----		Service Note: Original engine was equipped for or with a 12 volt or 120 volt Gear Drive Starter and/or with alternator only. Transfer all related parts as required.
	-----		Service Note: Transfer Muffler and/or Spark Arrester Assembly from the original engine if suitable for additional service or add new parts as required
	-----		Short Block Note: Engines Built Prior to 07/12/2012 should use short block 697762. Engines built on or after 07/12/2012 should use short block 592060.

Not For Reproduction

Copyright © Briggs & Stratton. All Rights reserved