# Parts Manual

Mfg. No: 303447-0474-01

Copyright © Briggs & Stratton. All Rights reserved

22-Jun-2026

## Model Components

Page


Air Cleaner. . . . . 4
Alternator, Ignition, Wires. . . . . 6
Blower Housing. . . . . 12
Camshaft, Crankshaft, Cylinder, Piston, Rings, Connecting Rod. . . . . 14
Carburetor. . . . . 18
Carburetor Overhaul Kit, Engine & Valve Gasket Sets. . . . . 22
Controls, Springs. . . . . 26
Crankcase Cover, Intake Manifold. . . . . 30
Cylinder Head, Valves, Rocker Covers. . . . . 32
Electric Starter #1. . . . . 36
Electric Starter #2. . . . . 38
Electronic Governor. . . . . 40
Exhaust System #1. . . . . 42
Exhaust System #2. . . . . 44
Flywheel, Starter Kit, Rotating Screens. . . . . 48
Fuel Supply. . . . . 50
Lubrication. . . . . 54
Replacement Engine - US & Canada. . . . . 56
Rewind Starter. . . . . 57
Shrouds, Air Guides. . . . . 59
Model 29, 30, 35 & 38 Engine Accessories Catalog. . . . . 61
- Maintenance Kits. . . . . 62
- Lubrication. . . . . 64
- Starter Motor Side Outlet Mufflers. . . . . 66
- Oil Filter Side Outlet Mufflers. . . . . 68
- Oil Filter Side Outlet Manifolds. . . . . 70
- Starter Motor Side Outlet Manifolds. . . . . 72
- Mufflers. . . . . 74
- Center Outlet Mufflers. . . . . 76
- Muffler Guards and Shields. . . . . 78
- Spark Arrestors and Deflectors. . . . . 80
- Muffler Mounting Hardware. . . . . 82
- Flywheel and Air Intake Guards. . . . . 84
- PTO. . . . . 86
- Electrical. . . . . 88
- Speed Control. . . . . 90


Not For Reproduction

Copyright © Briggs & Stratton. All Rights reserved

Mfg. No: 303447-0474-01

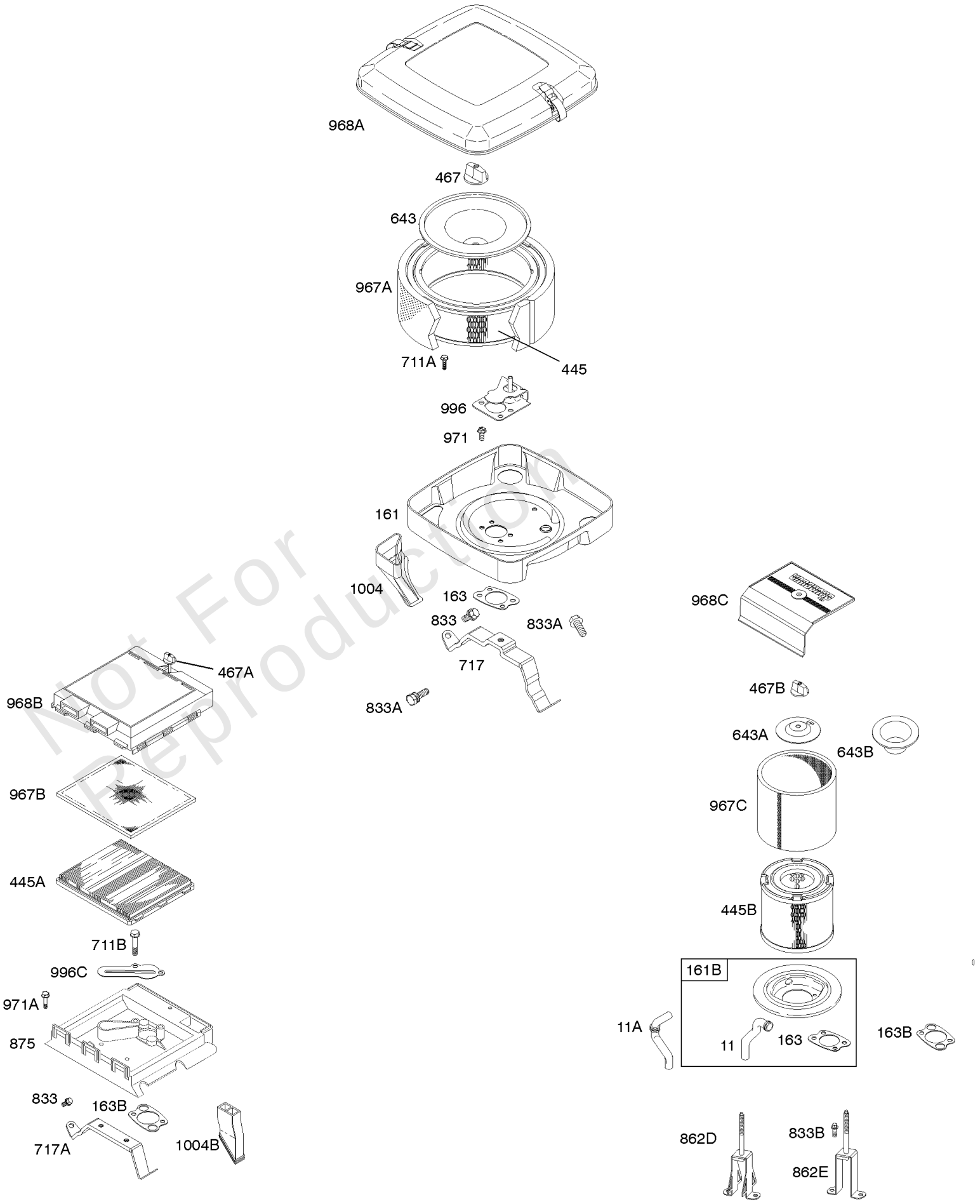


Not For Reproduction

## *Air Cleaner*

| REF NO | PART NO | QTY | DESCRIPTION |
|---|---|---|---|
| 11 | 691556 | | TUBE, Breather |
| 11A | 806083S | | TUBE, Breather |
| 161 | 691561 | | BASE, Air Cleaner -(Metal) |
| 161B | 808414 | | BASE, Air Cleaner -(Metal) |
| 163 | 692081 | | GASKET, Air Cleaner -(Air Cleaner) |
| 163B | 692052 | | GASKET, Air Cleaner -(Air Cleaner) |
| 445 | 394018S | | FILTER, A/C Cartridge |
| 445A | 805113 | | FILTER, A/C Cartridge |
| 445B | 393957S | | FILTER, A/C Cartridge |
| 467 | 691985 | | KNOB, Air Cleaner Cover |
| 467A | 690895 | | KNOB, Air Cleaner Cover |
| 467B | 691668 | | KNOB, Air Cleaner Cover |
| 643 | 692079 | | RETAINER, Air Filter |
| 643A | 690447 | | RETAINER, Air Filter |
| 643B | 691730 | | RETAINER, Air Filter |
| 711A | 691492 | | SCREW -(Carburetor Shield) |
| 711B | 690699 | | SCREW -(Carburetor Shield) |
| 717 | 692153 | | BRACKET, Air Cleaner |
| 717A | 807563 | | STRAP/STUD, Air Cleaner Mounting |
| 833 | 841233 | | SCREW -(Air Cleaner Mounting Strap/Stud) |
| 833A | 807084 | | SCREW -(Air Cleaner Mounting Strap/Stud) |
| 833B | 691593 | | SCREW -(Air Cleaner Mounting Strap/Stud) |
| 862D | 691565 | | STRAP/STUD, Air Cleaner Mounting |
| 862E | 492133 | | STRAP/STUD, Air Cleaner Mounting |
| 875 | ----- | | Base-Air Cleaner -(Plastic) (NO LONGER AVAILABLE) |
| 967A | 272490S | | FILTER, Pre Cleaner |
| 967C | 271794S | | FILTER, Pre Cleaner |
| 967B | 805267S | | FILTER, Pre Cleaner |
| 968A | 699959 | | COVER, Air Cleaner -(Metal) |
| 968B | ----- | | Cover-Air Cleaner -(NO LONGER AVAILABLE) |
| 968C | 691910 | | COVER, Air Cleaner |
| 971 | 807084 | | SCREW -(Air Cleaner Base to Carburetor) |
| 971A | 690699 | | SCREW -(Air Cleaner Base to Carburetor) |
| 996 | 691577 | | SHIELD, Carburetor |
| 996C | 690696 | | SHIELD, Carburetor |
| 1004 | 690743 | | DUCT, Air |
| 1004B | 692538 | | DUCT, Air -(Used With Plastic Air Cleaner Base) |

Not For Reproduction

Copyright © Briggs & Stratton. All Rights reserved

# Alternator, Ignition, Wires

Mfg. No: 303447-0474-01

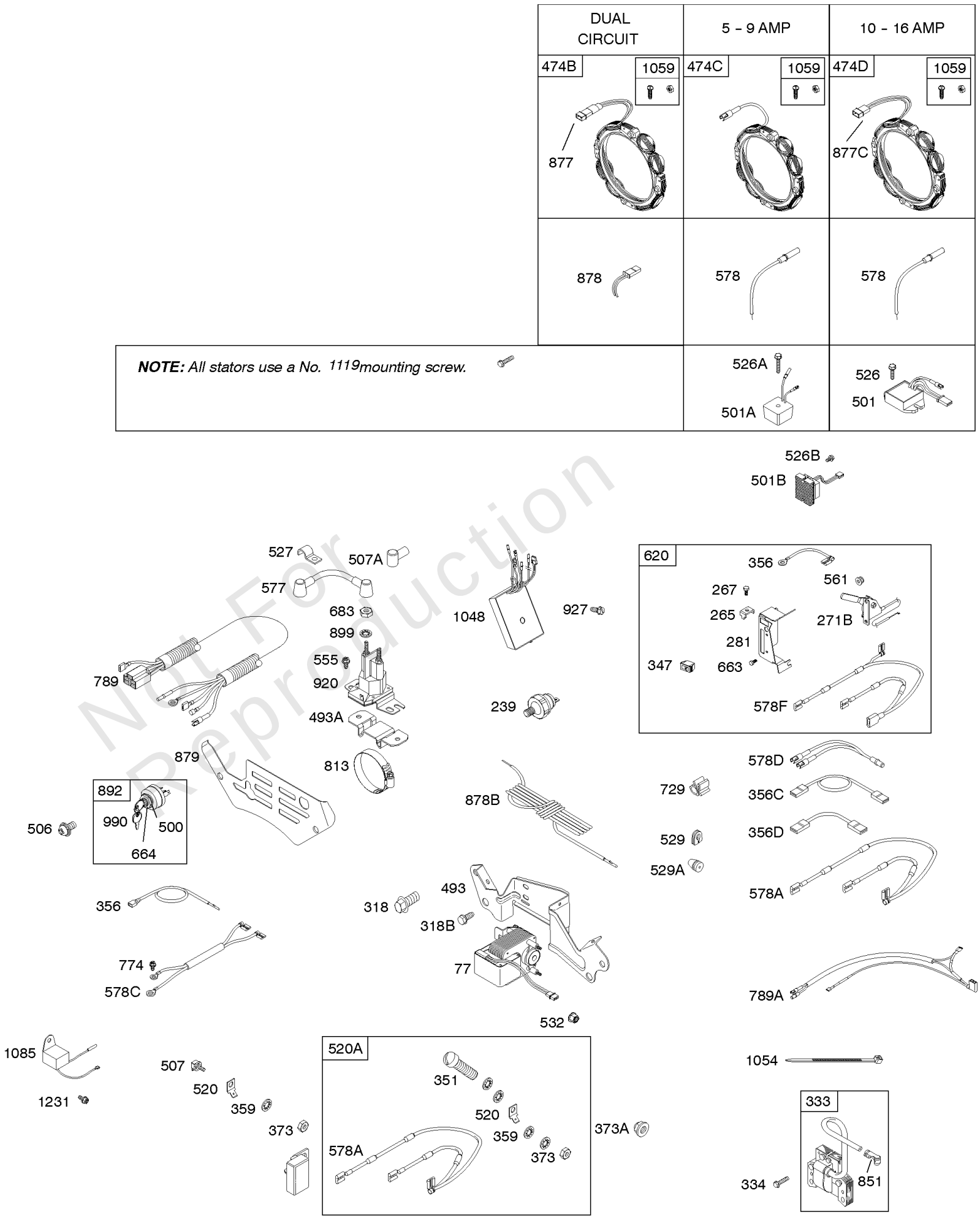


Not For Reproduction

## *Alternator, Ignition, Wires*

| REF NO | PART NO | QTY | DESCRIPTION |
|---|---|---|---|
| 5 | 809200 | | HEAD, Cylinder<br>-(Cylinder 1) |
| 10 | 690751 | | SCREW<br>-(Breather Assembly)<br>-Used After Code Date 90111400 |
| 10 | 805194 | | SCREW<br>-(Breather Assembly)<br>-Used Before Code Date 90111500 |
| 77 | 690819 | | MOTOR, Servo<br>-(Motor-Servo is )(See ref#1463 for Replacement Kit) |
| 239 | 491657S | | SWITCH, Oil Pressure<br>-(Normally Closed) |
| 239 | 690233 | | SWITCH, Oil Pressure<br>-(Lower Pressure to Open) |
| 265 | 691024 | | CLAMP, Casing |
| 267 | 692083 | | SCREW<br>-(Casing Clamp) |
| 271B | 691028 | | LEVER, Control |
| 281 | 690742 | | PANEL, Control |
| 318 | 806870 | | SCREW<br>-(Mounting Bracket) |
| 318B | 690932 | | SCREW<br>-(Mounting Bracket) |
| 333 | 844548 | | ARMATURE, Magneto<br>-Used After Code Date 09100700 |
| 333 | 492341 | | ARMATURE, Magneto<br>-Used Before Code Date 09100800 |
| 334 | 692066 | | SCREW<br>-(Magneto Armature) |
| 347 | 691995 | | SWITCH-ROCKER<br>-(Without Light) |
| 351 | 691615 | | SCREW<br>-(Ground Terminal) |
| 356 | 690796 | | WIRE, Stop |
| 356C | 807593 | | WIRE, Stop<br>-(Cylinder 2) |
| 356D | 807594 | | WIRE, Stop<br>-(Cylinder 1) |
| 359 | 691077 | | WASHER<br>-(Ground Terminal) |
| 373 | 691612 | | NUT<br>-(Ground Terminal) |
| 373A | 690713 | | NUT<br>-(Ground Terminal) |
| 474C | 696457 | | ALTERNATOR<br>-(5 and 9 Amp Regulated) |
| 474D | 592830 | | ALTERNATOR<br>-(10-16 Amp Regulated) |
| 493 | 691518 | | BRACKET, Mounting |
| 493A | 691177 | | BRACKET, Mounting<br>-(Regulator) |
| 500 | 691086 | | WASHER<br>-(Key Switch) |
| 501 | 797375 | | REGULATOR<br>-(10 Amp Regulated) |
| 501A | 794360 | | REGULATOR<br>-(5/9 Amp. Regulated) |
| 506 | 690677 | | SCREW<br>-(Carburetor Cover) |

Not For Reproduction

# Alternator, Ignition, Wires

Mfg. No: 303447-0474-01

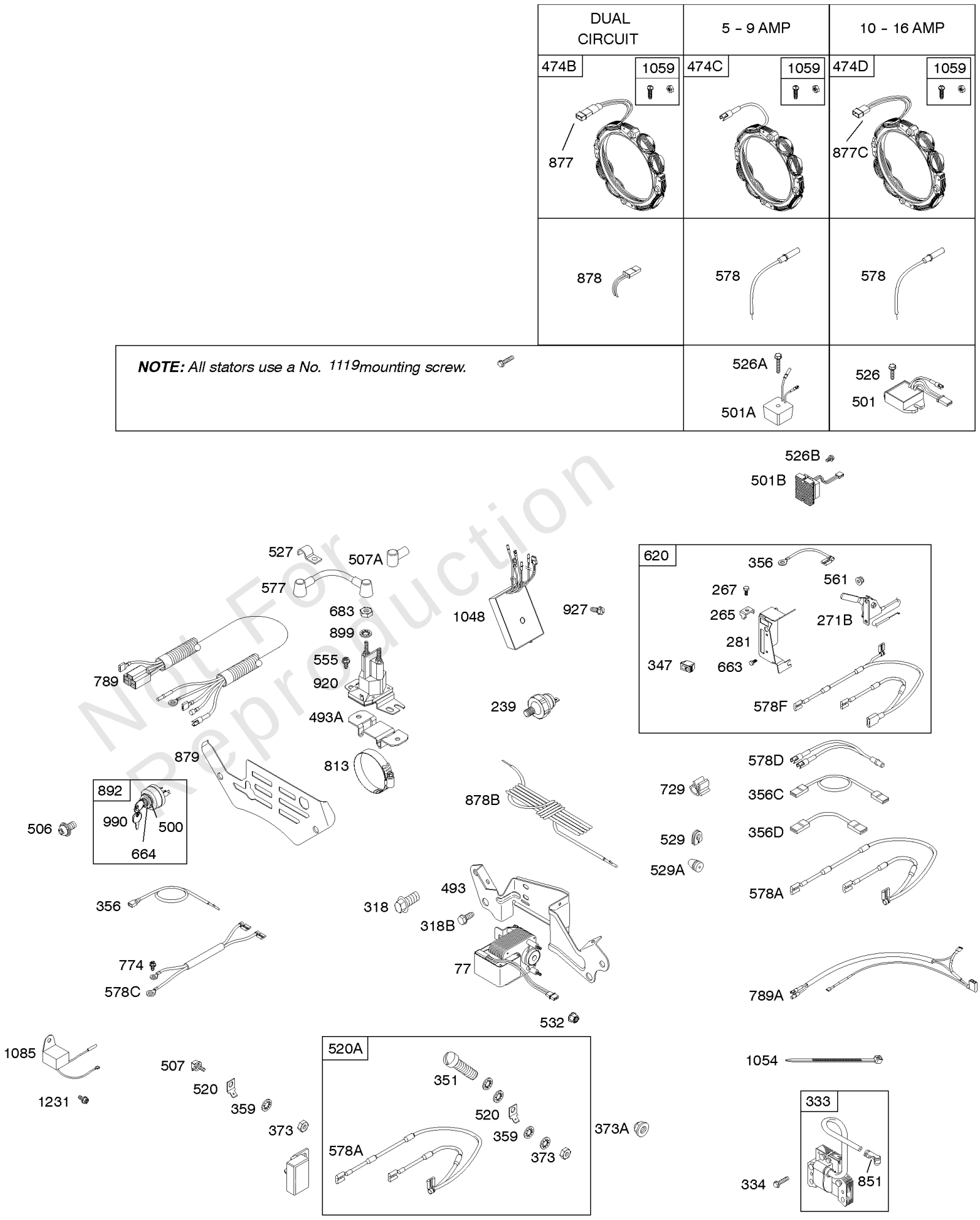


Not For Reproduction

## *Alternator, Ignition, Wires*

| REF NO | PART NO | QTY | DESCRIPTION |
|---|---|---|---|
| 507 | 691972 | | INSULATOR |
| 507A | 281223 | | INSULATOR |
| 520 | 691084 | | TERMINAL, Ground |
| 520A | 809077 | | TERMINAL, Ground<br>-(Ignition Shutoff) |
| 526 | 692067 | | SCREW<br>-(Regulator) (10-16 Amp Regulated) |
| 526A | 690717 | | SCREW<br>-(Regulator) (5/9 Amp. Regulated)<br>-Used After Code Date 90021100 |
| 526A | 810084 | | SCREW<br>-(Regulator) (5/9 Amp. Regulated)<br>-Used Before Code Date 90021200 |
| 527 | 690423 | | CLAMP, Tube |
| 529 | 690744 | | GROMMET |
| 529A | 691527 | | GROMMET |
| 532 | 691115 | | NUT<br>-(Mounting Bracket) |
| 555 | 692067 | | SCREW<br>-(Starter Solenoid) |
| 561 | 690713 | | NUT<br>-(Control Lever) |
| 577 | 690795 | | CABLE, Starter |
| 578 | 692306 | | WIRE ASSEMBLY |
| 578A | 844547 | | HARNESS, Wiring<br>-(Ignition Coil) |
| 578D | 692961 | | WIRE ASSEMBLY |
| 578C | 690809 | | WIRE ASSEMBLY |
| 578F | 691999 | | WIRE ASSEMBLY<br>-(Ignition Coil) |
| 620 | 494052 | | BRACKET, Control<br>-(Ignition Coil) |
| 663 | 692083 | | SCREW<br>-(Control Panel) |
| 664 | 691087 | | NUT<br>-(Key Switch) |
| 683 | 691029 | | NUT<br>-(Starter Solenoid) |
| 729 | 690586 | | CLIP, Wire |
| 774 | 692067 | | SCREW<br>-(Stop Wire) |
| 789 | 691996 | | HARNESS, Wiring |
| 789A | 844549 | | HARNESS-WIRING |
| 813 | 690635 | | CLAMP |
| 851 | 493880S | | TERMINAL, Spark Plug |
| 877 | 393456 | | WIRE/CONNECTOR, Alternator |
| 877C | 399916 | | WIRE/CONN-ALTERNATOR |
| 878 | 398661 | | HARNESS, Wiring<br>-(Dual Circuit) |
| 878B | 691362 | | HARNESS, Wiring |
| 879 | ----- | | Cover-Carburetor<br>-(NO LONGER AVAILABLE) |
| 892 | 692318 | | SWITCH, Key |
| 899 | 691077 | | WASHER<br>-(Starter Solenoid) |
| 920 | 691656 | | SOLENOID, Starter |
| 927 | 691116 | | SCREW<br>-(Electronic Governor Module) |

Not For Reproduction

# Alternator, Ignition, Wires

Mfg. No: 303447-0474-01

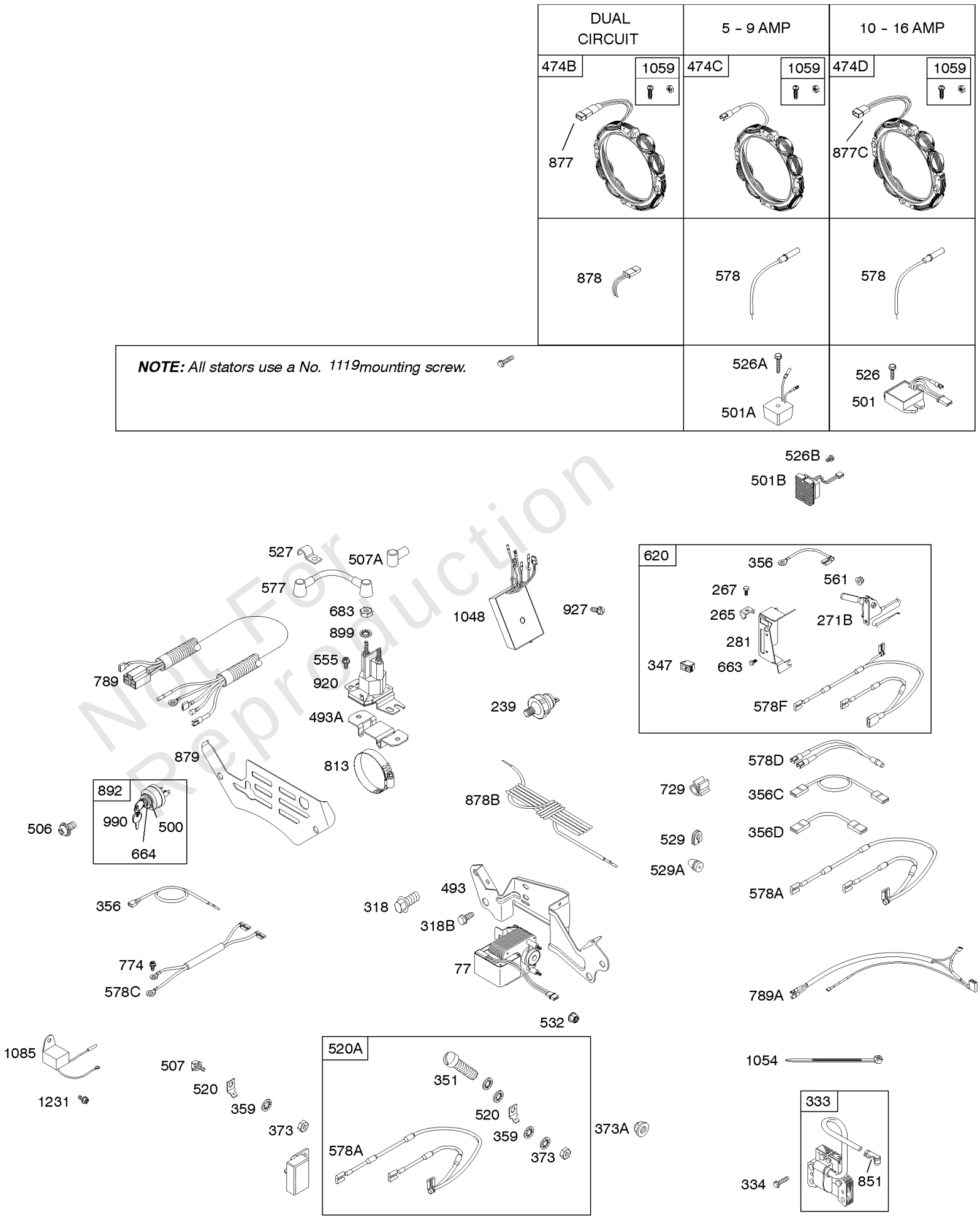


Not For Reproduction

## *Alternator, Ignition, Wires*

| REF NO | PART NO | QTY | DESCRIPTION |
|---|---|---|---|
| 990 | 691959 | | SET, Key |
| 1048 | 690669 | | MODULE, Electronic Governor |
| 1054 | 280275 | | TIE, Cable |
| 1059 | 698516 | | KIT, Screw/Washer |
| 1085 | 809093 | | MODULE, Ignition |
| 1119 | 691552 | | SCREW<br>-(Alternator) |
| 1231 | 692067 | | SCREW<br>-(Ignition Module) |

Not For Reproduction

Copyright © Briggs & Stratton. All Rights reserved

Mfg. No: 303447-0474-01

## METAL AIR CLEANER BASE

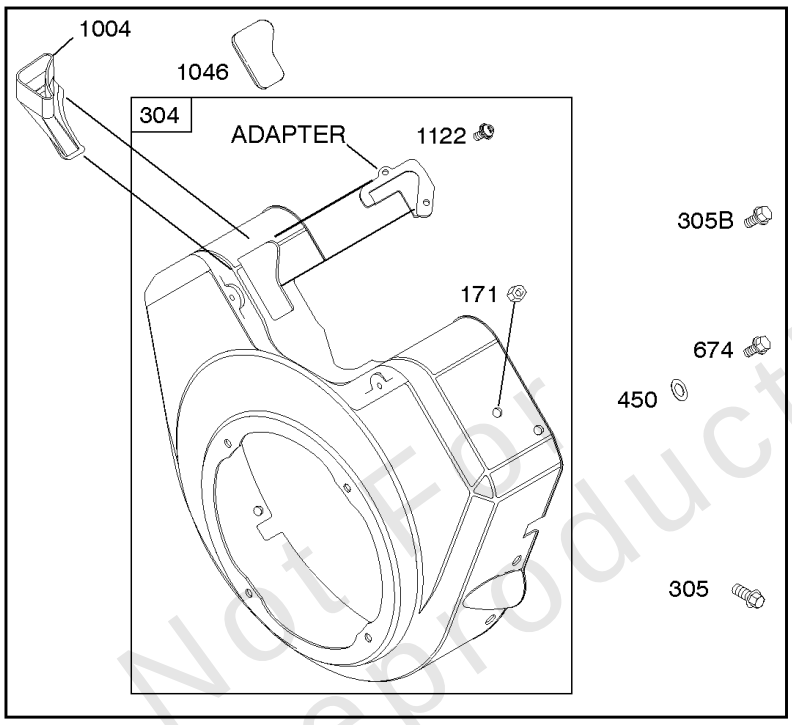


1036 EMISSIONS LABEL

## PLASTIC AIR CLEANER BASE

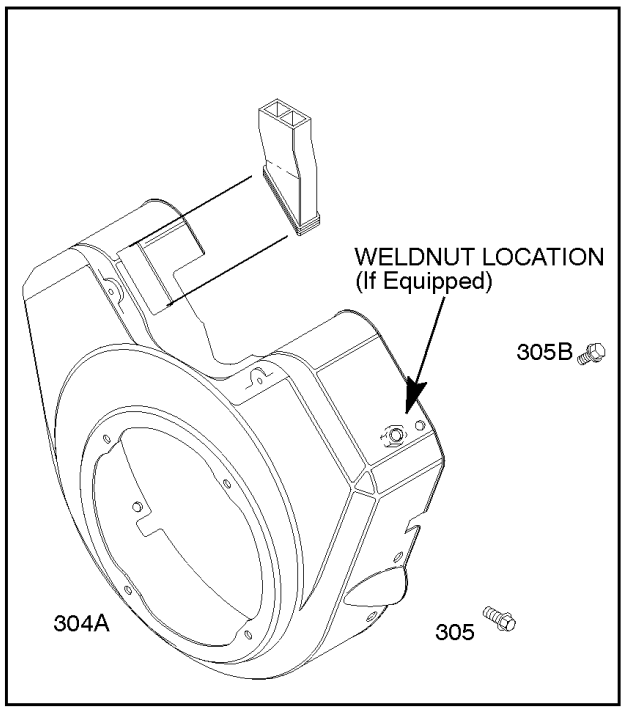


Not For Reproduction

## *Blower Housing*

| REF NO | PART NO | QTY | DESCRIPTION |
|---|---|---|---|
| 171 | 810056 | | NUT<br>-(Air Cleaner) |
| 304 | ----- | | Housing-Blower<br>-(NO LONGER AVAILABLE) |
| 304A | 808408 | | HOUSING, Blower<br>-(Black) |
| 305 | 692056 | | SCREW<br>-(Blower Housing) (14 mm ) |
| 305 | 807163 | | SCREW<br>-(Blower Housing) (10mm ) |
| 305 | 841233 | | SCREW<br>-(Blower Housing) |
| 305B | 692062 | | SCREW<br>-(Blower Housing) (18mm Long) |
| 450 | 806497 | | WASHER<br>-(Fuel Tank Bracket) |
| 674 | 692056 | | SCREW<br>-(Fuel Tank Bracket) (M8 X 14) |
| 1004 | 690743 | | DUCT, Air |
| 1036 | ----- | | Label-Emissions<br>-(Available From A Briggs & Stratton Authorized Dealer) |
| 1046 | 692082 | | PLUG, Blower Housing |
| 1122 | 93410 | | SCREW<br>-(Blower Housing Adapter) |

Not For Reproduction

# Camshaft, Crankshaft, Cylinder, Piston, Rings, Connecting Rod

Mfg. No: 303447-0474-01

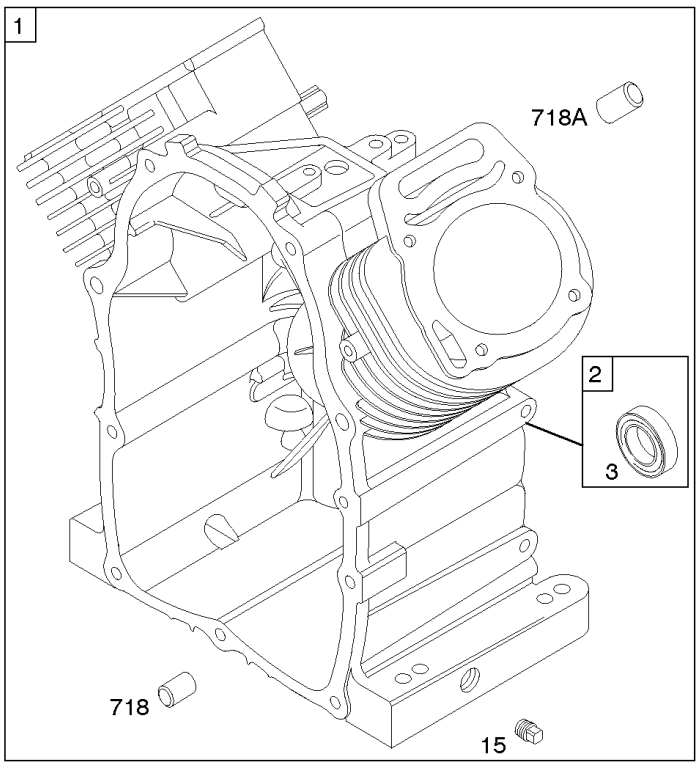


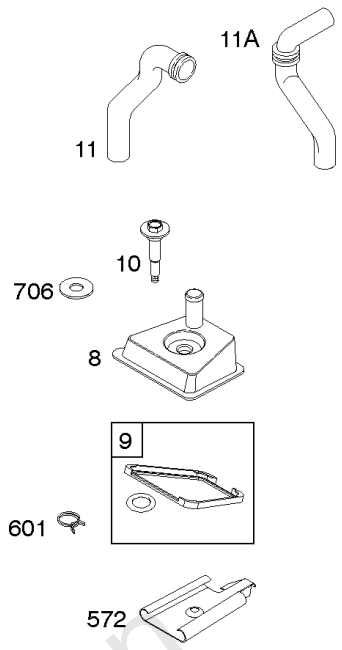


1036 EMISSIONS LABEL

1058 OPERATOR'S MANUAL

1330 REPAIR MANUAL

1319 WARNING LABEL

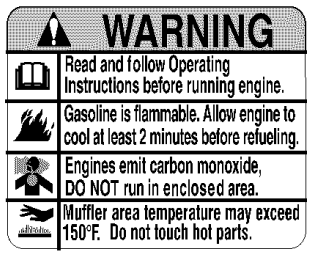


***REQUIRED** when replacing parts with warning labels affixed.*

Not For Reproduction

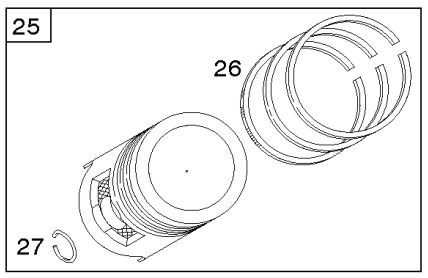


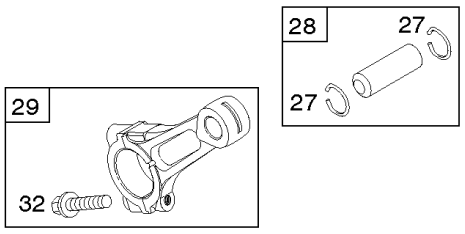


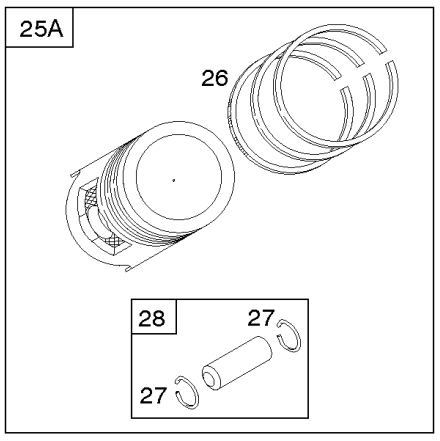


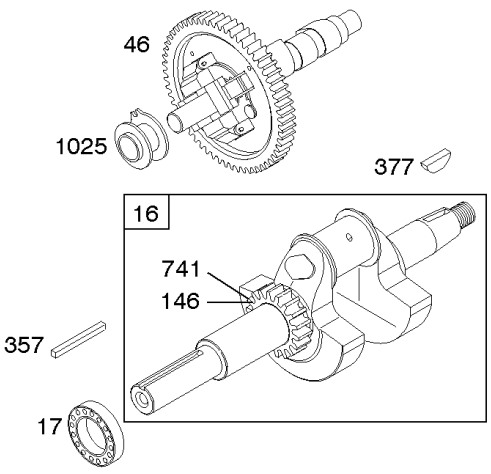


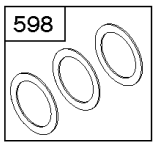

## *Camshaft, Crankshaft, Cylinder, Piston, Rings, Connecting Rod*

| REF NO | PART NO | QTY | DESCRIPTION |
|---|---|---|---|
| 1 | 692178 | | CYLINDER ASSEMBLY<br>-Used After Code Date 97043000 |
| 1 | 807521 | | CYLINDER ASSEMBLY<br>-Used Before Code Date 97050100 |
| 2 | 808534 | | KIT, Bushing/Seal<br>-(Magneto Side)<br>-Used After Code Date 97043000 |
| 2 | 807687 | | KIT, Bushing/Seal<br>-(Magneto Side)<br>-Used Before Code Date 97050100 |
| 3 | 805101S | | SEAL, Oil<br>-(Magneto Side) |
| 8 | 808984 | | BREATHER ASSEMBLY |
| 9 | 844986 | | GASKET, Breather |
| 10 | 805194 | | SCREW<br>-(Breather Assembly)<br>-Used Before Code Date 90111500 |
| 10 | 690751 | | SCREW<br>-(Breather Assembly)<br>-Used After Code Date 90111400 |
| 11 | 691556 | | TUBE, Breather |
| 11A | 806083S | | TUBE, Breather |
| 15 | 690946 | | PLUG, Oil Drain<br>-(3/8"-18 NPTF-External 7/16" Sq) |
| 15 | 691680 | | PLUG, Oil Drain<br>-(3/8"-18 NPTF - Internal 3/8" Sq) |
| 16 | ----- | | Crankshaft<br>-(NO LONGER AVAILABLE)<br>-Used Before Code Date 97050100 |
| 17 | 843827 | | BEARING, Ball |
| 25 | 843952 | | PISTON ASSEMBLY<br>-(Standard)<br>-Used After Code Date 07122300 |
| 25 | 843956 | | PISTON ASSEMBLY<br>-(Standard)<br>-Used After Code Date 07122300 |
| 25A | 843951 | | PISTON ASSEMBLY<br>-(Standard)<br>-Used Before Code Date 07122400 |
| 25A | 843958 | | PISTON ASSEMBLY<br>-(.020 Oversize)<br>-Used Before Code Date 07122400 |
| 26 | ----- | | Ring Set<br>-(For Replacement Rings Order Ref #25A)<br>-Used Before Code Date 07122400 |
| 26 | 843953 | | SET, Ring<br>-(Standard)<br>-Used After Code Date 07122300 |
| 26 | 843957 | | SET, Ring<br>-(.020 Oversize) |
| 27 | 690683 | | LOCK, Piston Pin |
| 28 | 807621 | | PIN, Piston<br>-(Standard)<br>-Used Before Code Date 07122400 |
| 28 | 844541 | | PIN, Piston<br>-(Standard)<br>-Used After Code Date 07122300 |
| 29 | 807900S | | ROD, Connecting<br>-(Standard) |
| 32 | 690698 | | SCREW<br>-(Connecting Rod) |

Not For Reproduction

Copyright © Briggs & Stratton. All Rights reserved

# Camshaft, Crankshaft, Cylinder, Piston, Rings, Connecting Rod

Mfg. No: 303447-0474-01

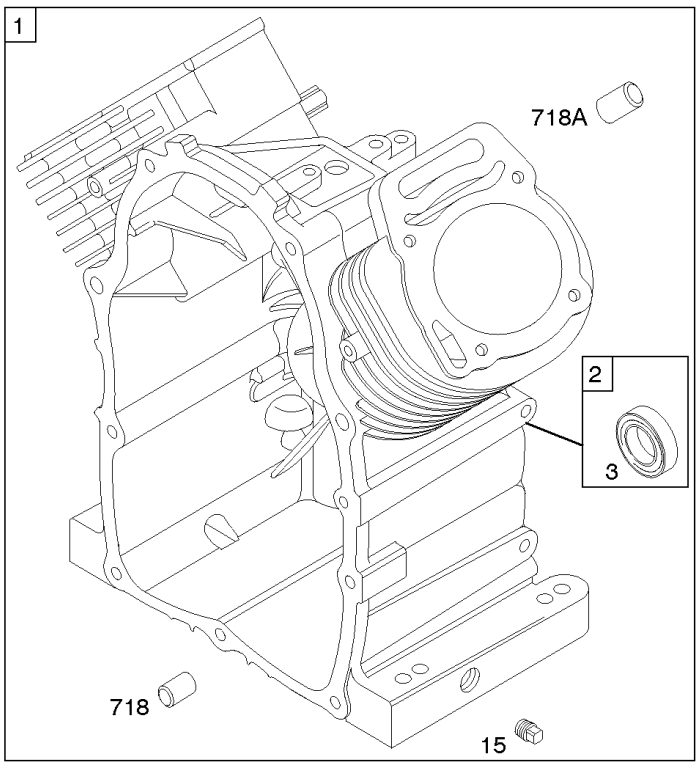


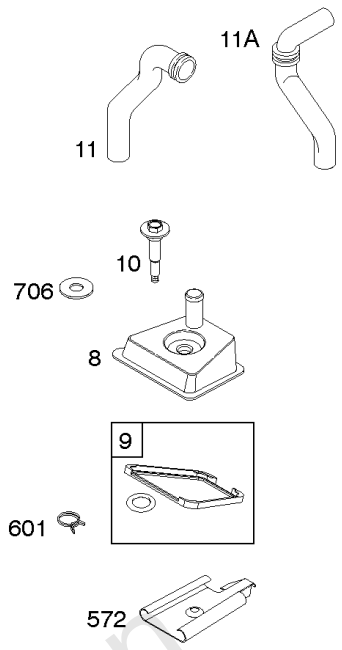


1036 EMISSIONS LABEL

1058 OPERATOR'S MANUAL

1330 REPAIR MANUAL

1319 WARNING LABEL

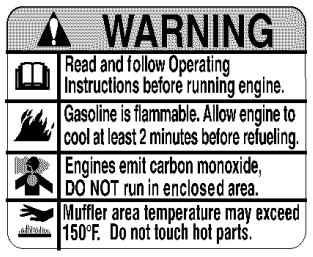


***REQUIRED** when replacing parts with warning labels affixed.*

Not For Reproduction

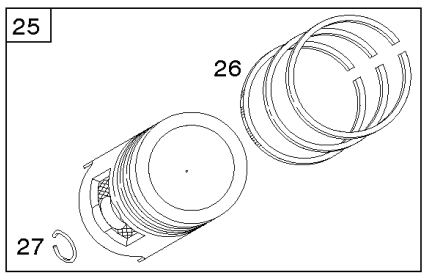


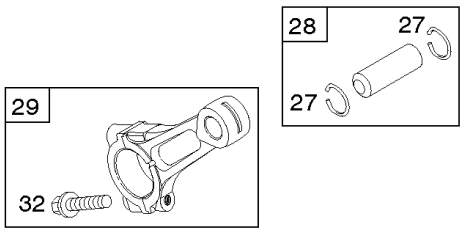


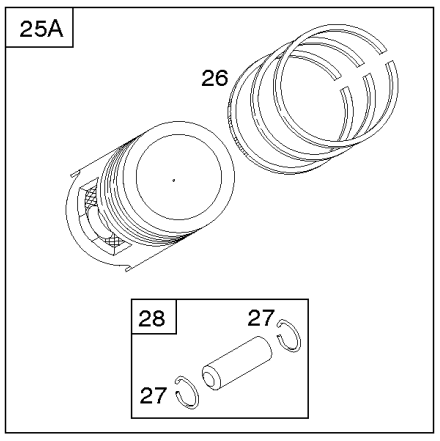


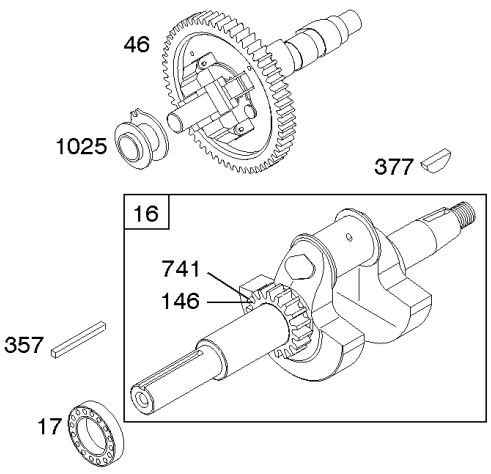


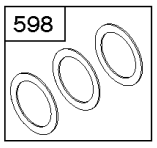

## *Camshaft, Crankshaft, Cylinder, Piston, Rings, Connecting Rod*

| REF NO | PART NO | QTY | DESCRIPTION |
|---|---|---|---|
| 46 | 845649 | | CAMSHAFT |
| 146 | 691639 | | KEY, Woodruff |
| 357 | 691483 | | KEY, Drive Pulley |
| 377 | 808095 | | KEY, Flywheel |
| 572 | 690686 | | BAFFLE, Breather<br>-Used Before Code Date 04060100 |
| 598 | 807625 | | SHIM, End Play<br>-(Crankshaft or Camshaft Bearing) |
| 601 | 691038 | | CLAMP, Hose |
| 706 | 805484 | | WASHER<br>-(Breather Assembly)<br>-Used Before Code Date 90111500 |
| 718 | 806469 | | PIN, Locating |
| 718A | 805102 | | PIN, Locating<br>-Used Before Code Date 90091100 |
| 741 | 691530 | | GEAR, Timing |
| 1025 | 690689 | | SPOOL, Governor |
| 1036 | ----- | | Label-Emissions<br>-(Available From A Briggs & Stratton Authorized Dealer) |
| 1058 | 276344TRI | | MANUAL, Operator's |
| 1319 | 794467 | | LABEL, Warning |
| 1330 | 272144 | | MANUAL, Repair |

Not For Reproduction

Copyright © Briggs & Stratton. All Rights reserved

# Carburetor

Mfg. No: 303447-0474-01

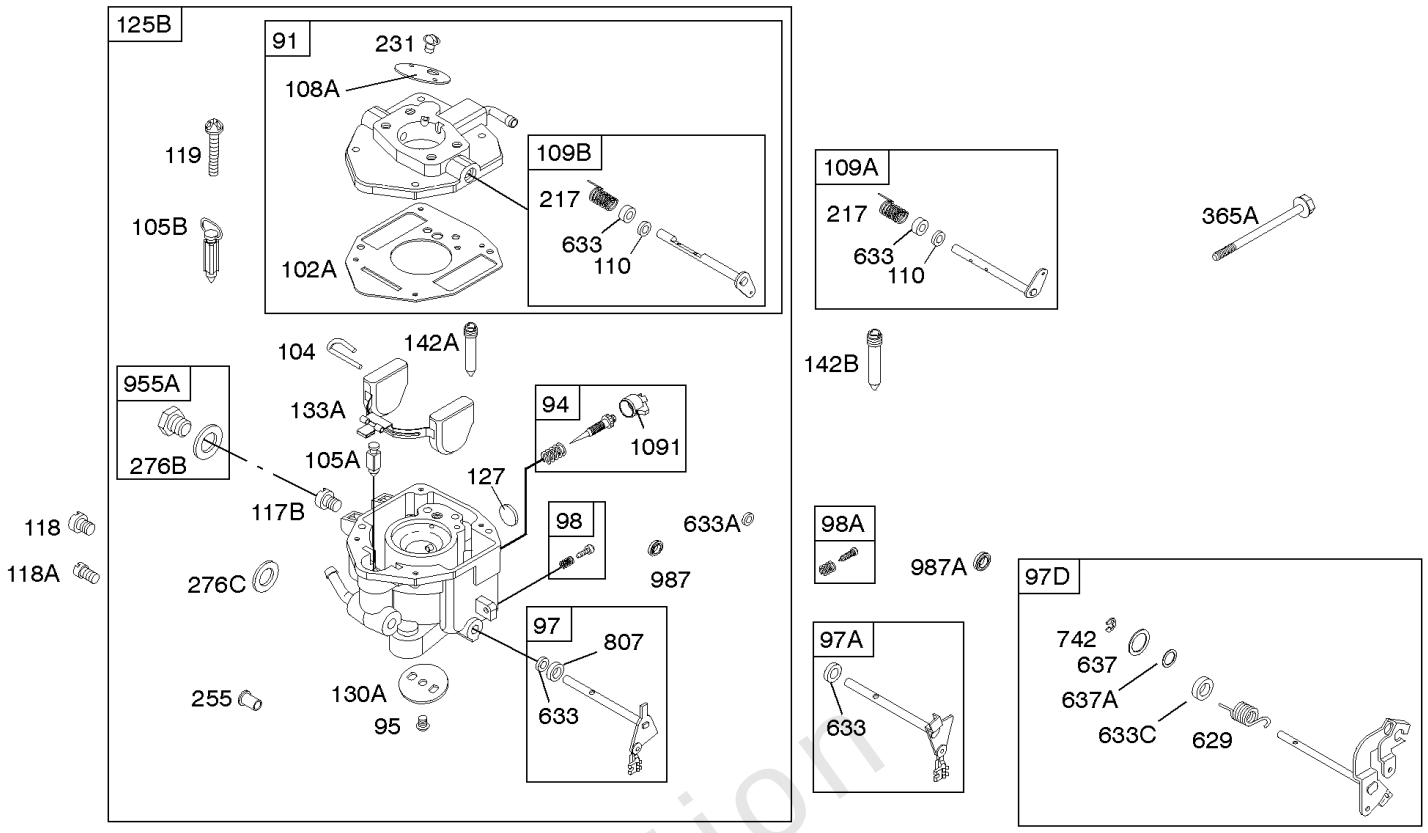


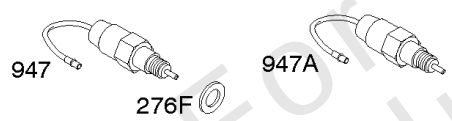


**No information for high altitude jet on types : 1314 & 1319.**

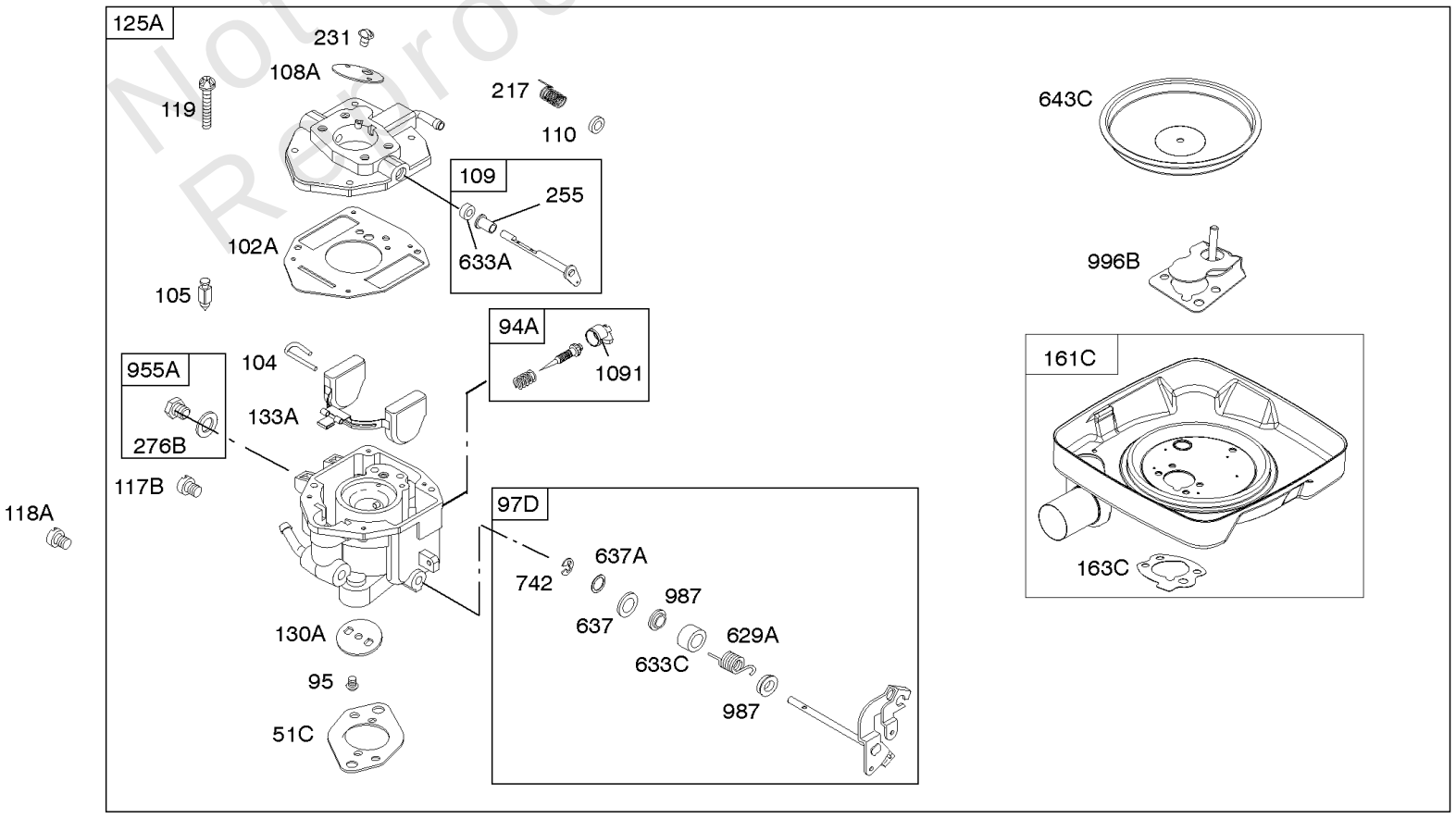


Not For Reproduction

## *Carburetor*

| REF NO | PART NO | QTY | DESCRIPTION |
|---|---|---|---|
| 51C | 691694 | | GASKET, Intake<br>-(Carburetor To Manifold) |
| 91 | 809208 | | BODY, Upper Carburetor |
| 94 | 842870 | | KIT, Idle Mixture |
| 95 | 690718 | | SCREW<br>-(Throttle Valve) |
| 97 | 807720 | | SHAFT, Throttle<br>-Used Before Code Date 00071200 |
| 97 | 809007 | | KIT, Throttle Shaft<br>-Used After Code Date 00071100 |
| 98 | 808177 | | KIT, Idle Speed |
| 102A | 692077 | | GASKET, Carburetor Body |
| 104 | 690723 | | PIN, Float Hinge |
| 105 | 797410 | | VALVE, Float Needle |
| 105A | 805620 | | VALVE, Float Needle<br>-(Gravity Feed Carburetor) |
| 105B | 808798 | | VALVE, Float Needle |
| 108A | 690719 | | VALVE, Choke |
| 109B | 809096 | | SHAFT-CHOKE |
| 110 | 806861 | | WASHER<br>-(Choke Shaft) |
| 117B | 690862 | | JET, Main<br>-(Standard) |
| 118 | 842311 | | JET, Main<br>-(High Altitude) |
| 119 | 690720 | | SCREW<br>-(Upper Carburetor Body to Lower Carburetor Body) |
| 125B | 809011 | | CARBURETOR<br>-(Pump Feed Without Solenoid) |
| 127 | 690727 | | PLUG, Welch |
| 130A | 690726 | | VALVE, Throttle |
| 133A | 806961 | | FLOAT, Carburetor |
| 142A | 690725 | | NOZZLE, Carburetor |
| 217 | 806862 | | SPRING, Choke Return |
| 231 | 690718 | | SCREW<br>-(Choke Valve) |
| 255 | 690721 | | BUSHING, Choke Shaft |
| 276B | 690724 | | WASHER, Sealing<br>-(Carburetor Plug) |
| 276F | 693497 | | WASHER, Sealing<br>-(Carburetor Plug) |
| 365A | 690711 | | SCREW<br>-(Carburetor) |
| 629 | 806717 | | SPRING, Throttle Return<br>-(Throttle Return) |
| 629A | 806716 | | SPRING, Throttle Return<br>-(Throttle Return) |
| 633 | 806131 | | SEAL, Choke/Throttle Shaft |
| 633A | 690722 | | SEAL, Choke/Throttle Shaft |
| 637 | 806999 | | WASHER<br>-(Throttle Shaft) |
| 637A | 807000 | | WASHER<br>-(Throttle Shaft) |
| 742 | 807001 | | RETAINER, E Ring |
| 807 | 805557 | | SPACER<br>-(Throttle) |
| 947A | 692094 | | SOLENOID, Fuel |

Not For Reproduction

Copyright © Briggs & Stratton. All Rights reserved

# Carburetor

Mfg. No: 303447-0474-01

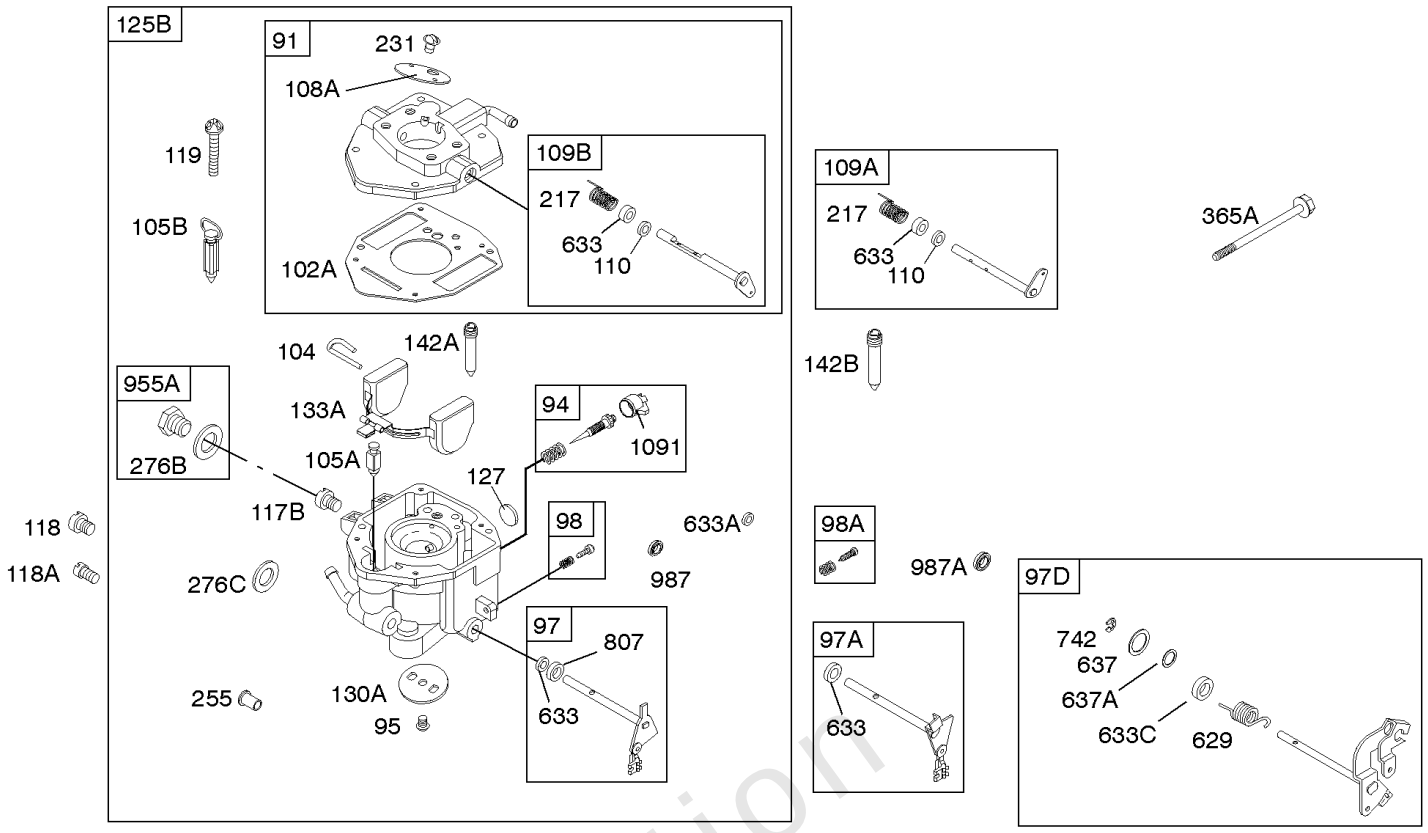


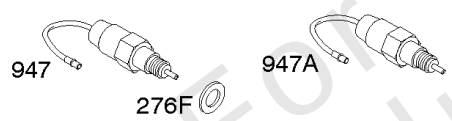


**No information for high altitude jet on types : 1314 & 1319.**

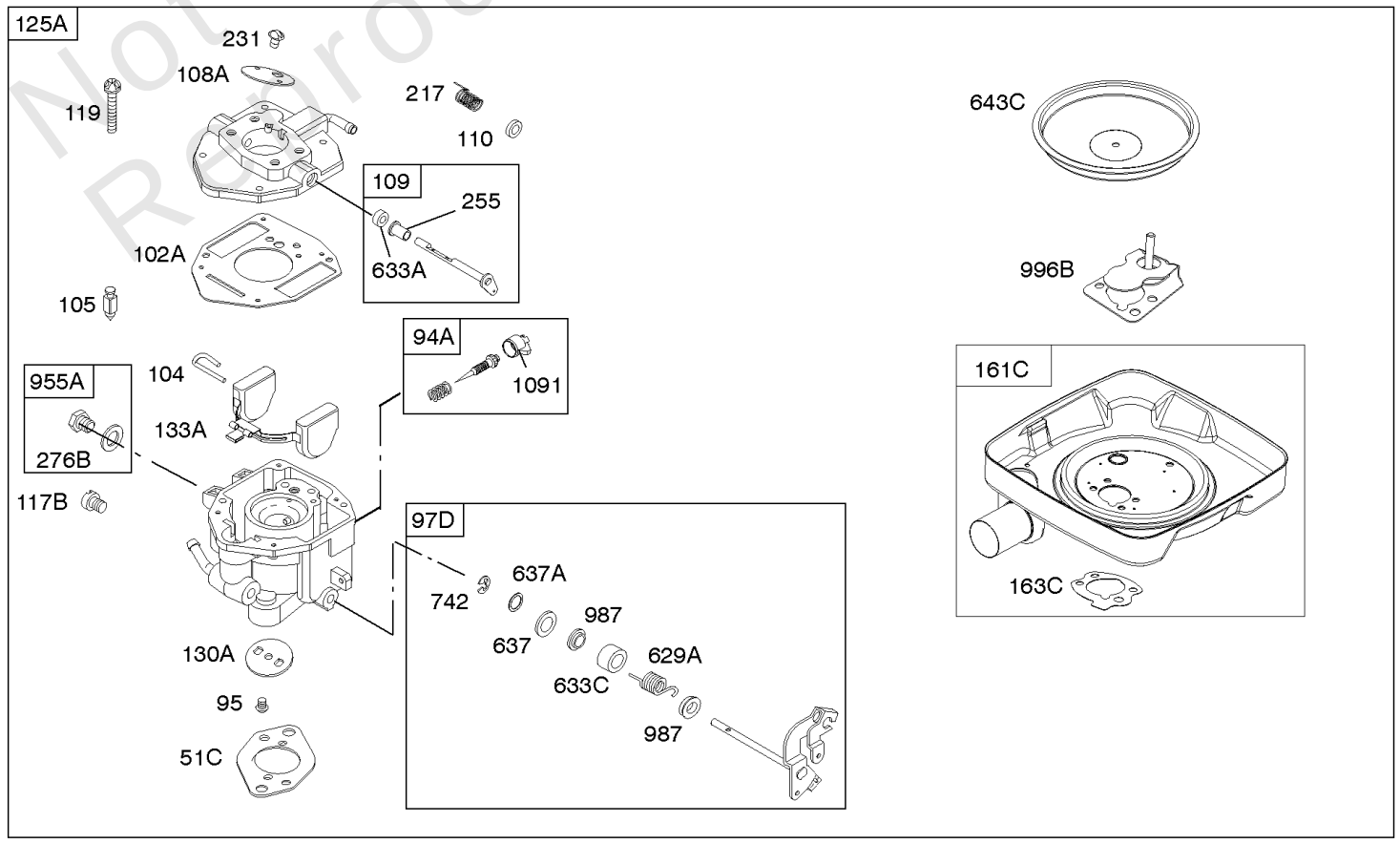


Not For Reproduction

## *Carburetor*

| REF NO | PART NO | QTY | DESCRIPTION |
|---|---|---|---|
| 955A | 807723 | | PLUG, Carburetor<br>-(Jet) |
| 987 | 807002 | | SEAL, Choke/Throttle Shaft |
| 987A | 806864 | | SEAL, Choke/Throttle Shaft |
| 1091 | 691516 | | CAP, Limiter |

Not For Reproduction

Copyright © Briggs & Stratton. All Rights reserved

Mfg. No: 303447-0474-01

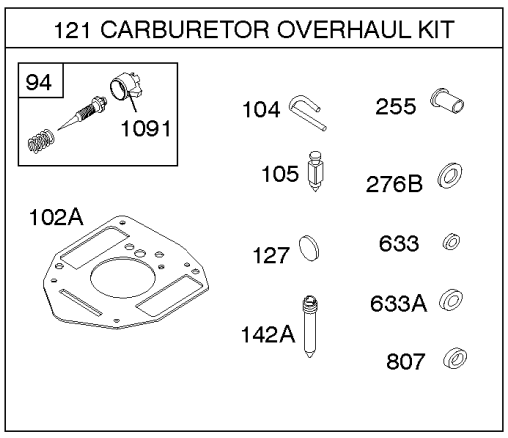


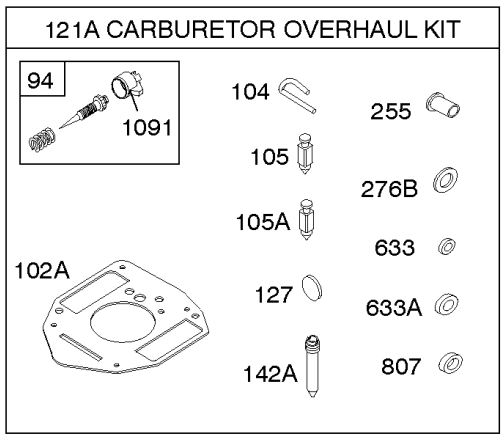


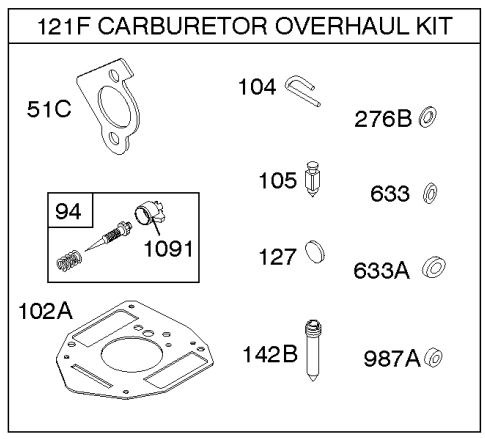


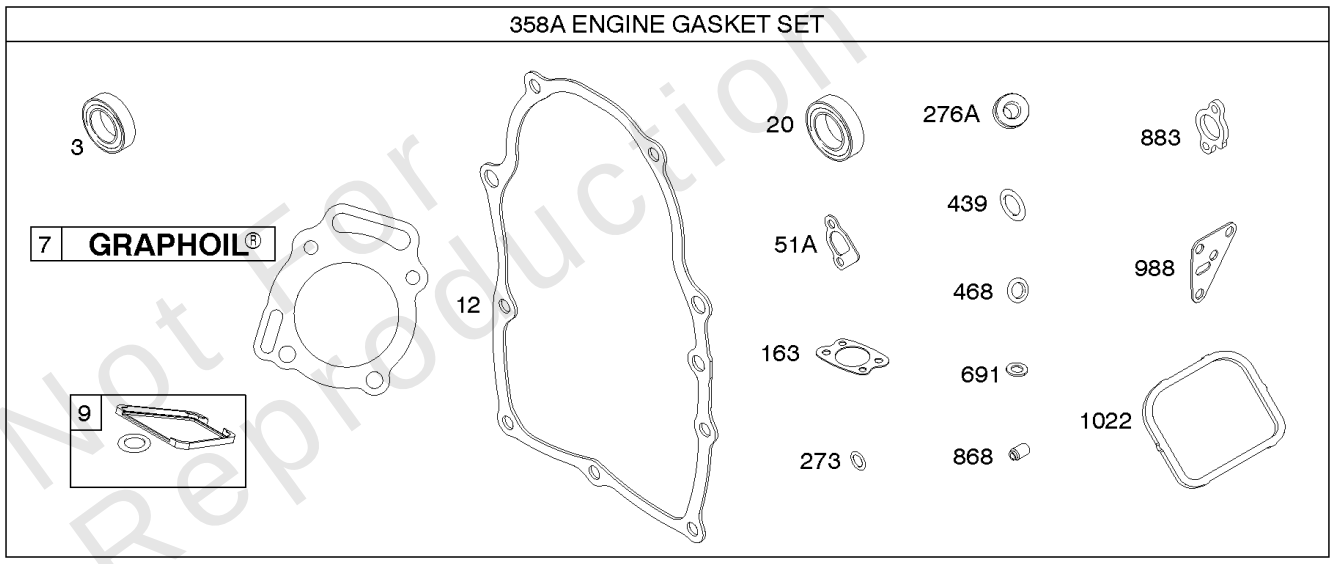


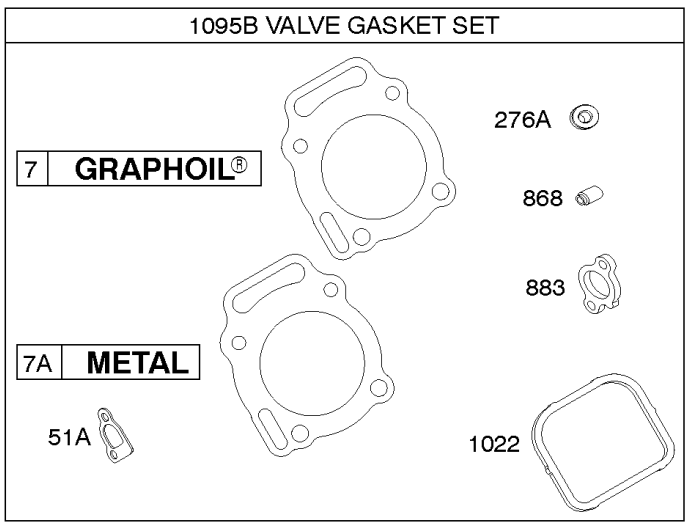


Not For Reproduction

## *Carburetor Overhaul Kit, Engine & Valve Gasket Sets*

| REF NO | PART NO | QTY | DESCRIPTION |
|---|---|---|---|
| 3 | 805101S | | SEAL, Oil<br>-(Magneto Side) |
| 7 | 806085S | | GASKET, Cylinder Head<br>-(Graphoil)<br>-Used After Code Date 96033100 |
| 7A | 807986 | | GASKET, Cylinder Head<br>-(Metal)<br>-Used Before Code Date 96040100 |
| 9 | 844986 | | GASKET, Breather |
| 12 | 845254 | | GASKET-CRANKCASE |
| 20 | 805049S | | SEAL, Oil<br>-(PTO Side) |
| 51A | 692035 | | GASKET, Intake<br>-(Manifold to Cylinder Head) |
| 51C | 691694 | | GASKET, Intake<br>-(Carburetor To Manifold) |
| 94 | 842870 | | KIT, Idle Mixture |
| 102A | 692077 | | GASKET, Carburetor Body |
| 104 | 690723 | | PIN, Float Hinge |
| 105 | 797410 | | VALVE, Float Needle |
| 105A | 805620 | | VALVE, Float Needle<br>-(Gravity Feed Carburetor) |
| 121 | 842877 | | KIT, Carburetor Overhaul |
| 127 | 690727 | | PLUG, Welch |
| 142A | 690725 | | NOZZLE, Carburetor |
| 163 | 692081 | | GASKET, Air Cleaner<br>-(Air Cleaner) |
| 255 | 690721 | | BUSHING, Choke Shaft |
| 273 | 690681 | | SEAL, O-Ring<br>-(Oil Pump) |
| 276A | 691766 | | WASHER, Sealing<br>-(Cylinder Head)<br>-Used Before Code Date 01120300 |
| 276A | 807085 | | WASHER, Sealing<br>-(Cylinder Head)<br>-Used After Code Date 01120200 |
| 276B | 690724 | | WASHER, Sealing<br>-(Carburetor Plug) |
| 358A | 808390 | | GASKET SET, Engine<br>-Used Before Code Date 01120300 |
| 358A | 808704 | | GASKET SET, Engine<br>-Used After Code Date 01120200 |
| 439 | 692154 | | O-RING, Oil Gallery<br>-(Crankcase Cover/Sump or Cylinder Assembly)<br>-Used After Code Date 97043000 |
| 439 | 805198 | | SEAL, O-Ring<br>-(Crankcase Cover/Sump or Cylinder Assembly)<br>-Used Before Code Date 97050100 |
| 468 | 690690 | | SEAL, O-Ring<br>-(Oil Pump Screen) |
| 633 | 806131 | | SEAL, Choke/Throttle Shaft |
| 633A | 690722 | | SEAL, Choke/Throttle Shaft |
| 691 | 842826 | | SEAL, Governor Shaft |
| 807 | 805557 | | SPACER<br>-(Throttle) |
| 868 | 691963 | | SEAL, Valve |
| 883 | 691613 | | GASKET, Exhaust |
| 987A | 806864 | | SEAL, Choke/Throttle Shaft |

Not For Reproduction

Copyright © Briggs & Stratton. All Rights reserved

Mfg. No: 303447-0474-01

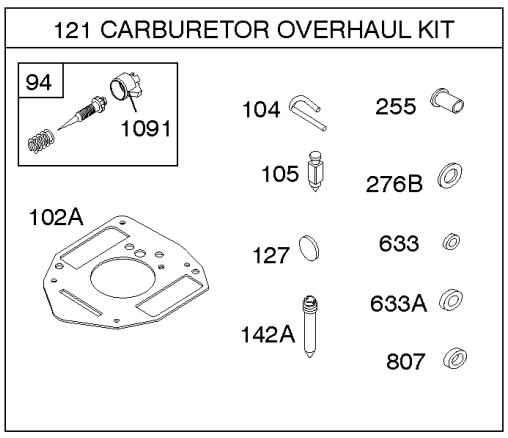


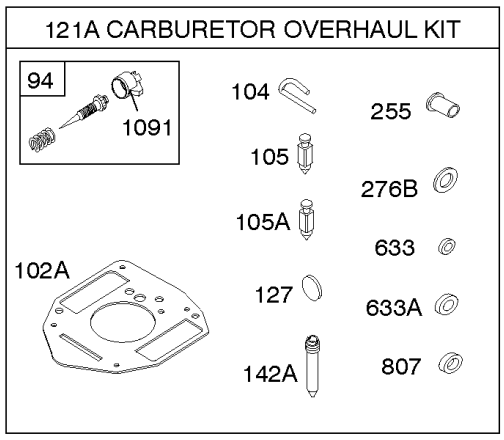


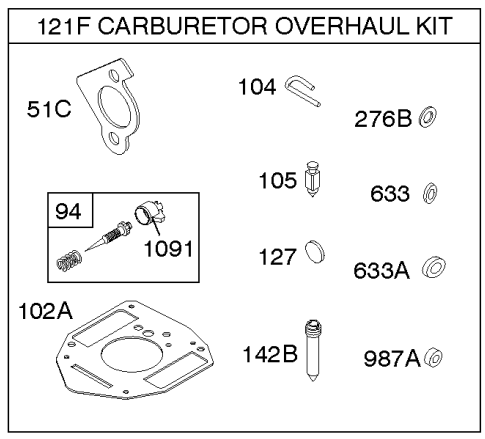


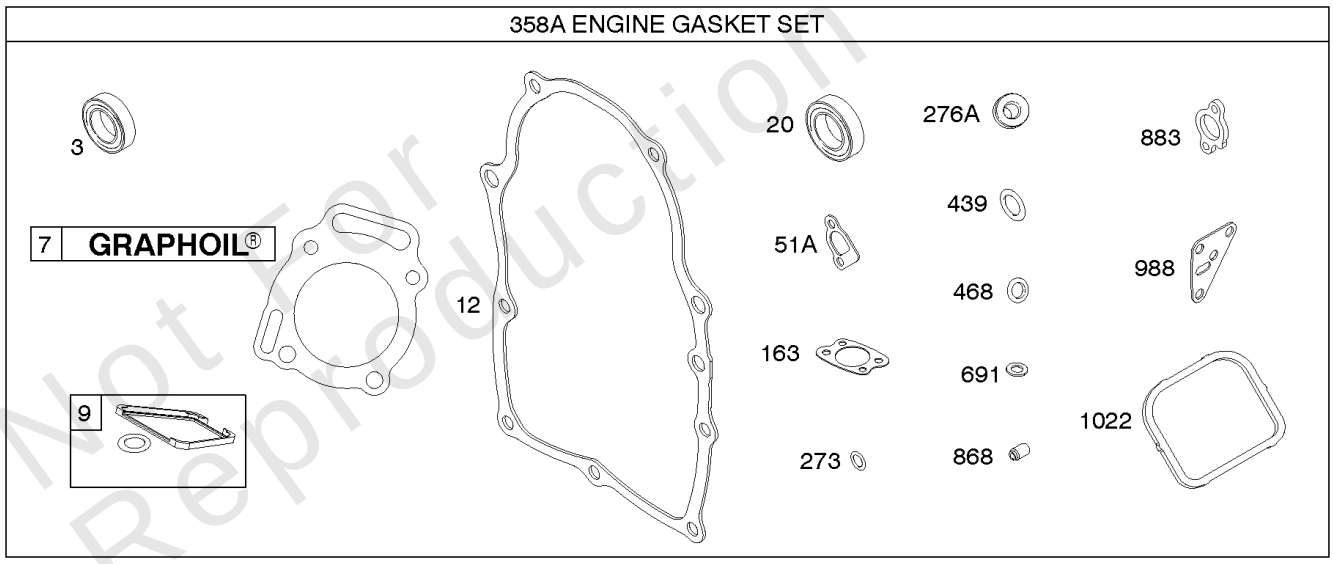


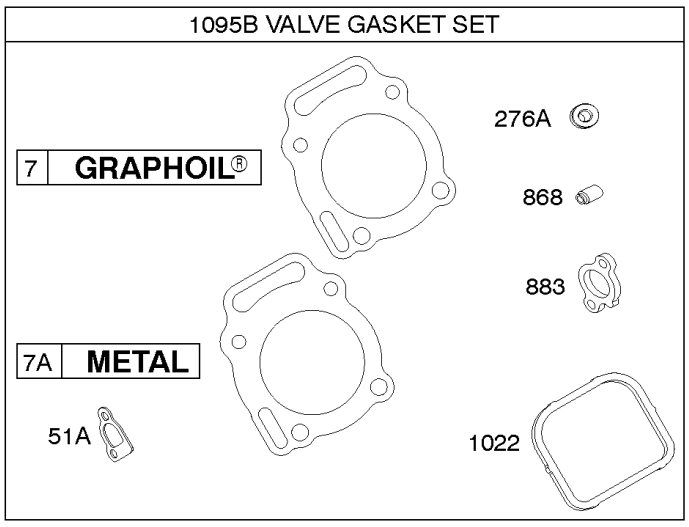


Not For Reproduction

## *Carburetor Overhaul Kit, Engine & Valve Gasket Sets*

| REF NO | PART NO | QTY | DESCRIPTION |
|---|---|---|---|
| 988 | 692063 | | GASKET, Oil Adapter |
| 1022 | 806039S | | GASKET, Rocker Cover |
| 1091 | 691516 | | CAP, Limiter |
| 1095B | 808392 | | GASKET SET, Valve<br>-Used Before Code Date 01120300 |
| 1095B | 842723 | | GASKET SET, Valve<br>-Used After Code Date 01120200 |

Not For Reproduction

Copyright © Briggs & Stratton. All Rights reserved

Mfg. No: 303447-0474-01

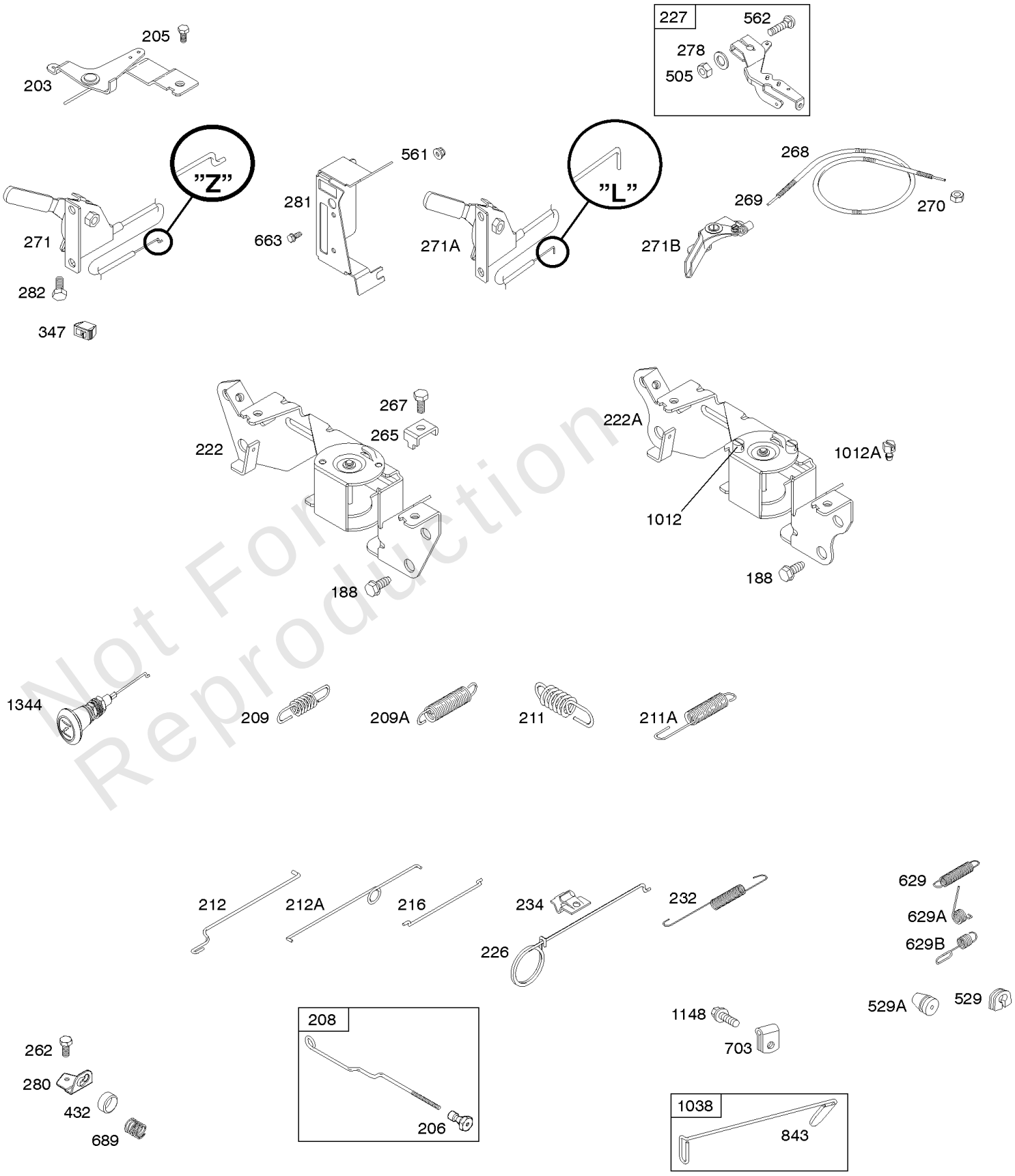


Not For Reproduction

## *Controls, Springs*

| REF NO | PART NO | QTY | DESCRIPTION |
|---|---|---|---|
| 188 | 692056 | | SCREW<br>-(Control Bracket) |
| 203 | 690923 | | CRANK, Bell |
| 205 | 692083 | | SCREW<br>-(Bell Crank) |
| 206 | 691244 | | NUT, Governor Adjusting |
| 208 | 808453 | | ROD, Governor Control |
| 209 | 692070 | | SPRING, Governor |
| 211 | 692069 | | SPRING, Governed Idle |
| 211A | 692068 | | SPRING, Governed Idle |
| 212 | 690712 | | LINK, Throttle |
| 212A | 691519 | | LINK-THROTTLE |
| 216 | 690705 | | LINK, Choke |
| 222 | 845305 | | BRACKET, Control<br>-(Used With Control Lever And/Or Wire With Z Formed End)<br>-Used After Code Date 94113000 |
| 226 | 692075 | | ROD, Choke |
| 227 | 690236 | | LEVER, Governor Control |
| 232 | 692073 | | SPRING, Governor Link |
| 234 | 691723 | | CLIP, Control Rod |
| 262 | 692083 | | SCREW<br>-(Rod Bracket) |
| 265 | 691024 | | CLAMP, Casing |
| 267 | 692083 | | SCREW<br>-(Casing Clamp) |
| 268 | 691025 | | CASING, Control Wire<br>-(Cut To Required Length) |
| 269 | 691026 | | WIRE, Control<br>-(Cut To Required Length) |
| 270 | 691027 | | NUT<br>-(Control Wire Casing) |
| 271 | 692541 | | LEVER, Control<br>-(Cable Wire With Z Formed End) |
| 271A | 692105 | | LEVER, Control<br>-(Cable Wire With L Formed End ) |
| 271B | 691028 | | LEVER, Control |
| 278 | 842122 | | WASHER<br>-(Governor Control Lever) |
| 280 | 691526 | | BRACKET, Fixed Speed |
| 281 | 690742 | | PANEL, Control |
| 282 | 692083 | | SCREW<br>-(Control Lever) |
| 347 | 691995 | | SWITCH-ROCKER<br>-(Without Light) |
| 432 | 691509 | | CAP, Spring |
| 505 | 690238 | | NUT<br>-(Governor Lever) |
| 529 | 690744 | | GROMMET |
| 529A | 691527 | | GROMMET |
| 561 | 690713 | | NUT<br>-(Control Lever) |
| 562 | 690239 | | BOLT<br>-(Governor Control Lever) |
| 629 | 806717 | | SPRING, Throttle Return<br>-(Throttle Return) |
| 629A | 806716 | | SPRING, Throttle Return<br>-(Throttle Return) |

Not For Reproduction

Copyright © Briggs & Stratton. All Rights reserved

Mfg. No: 303447-0474-01

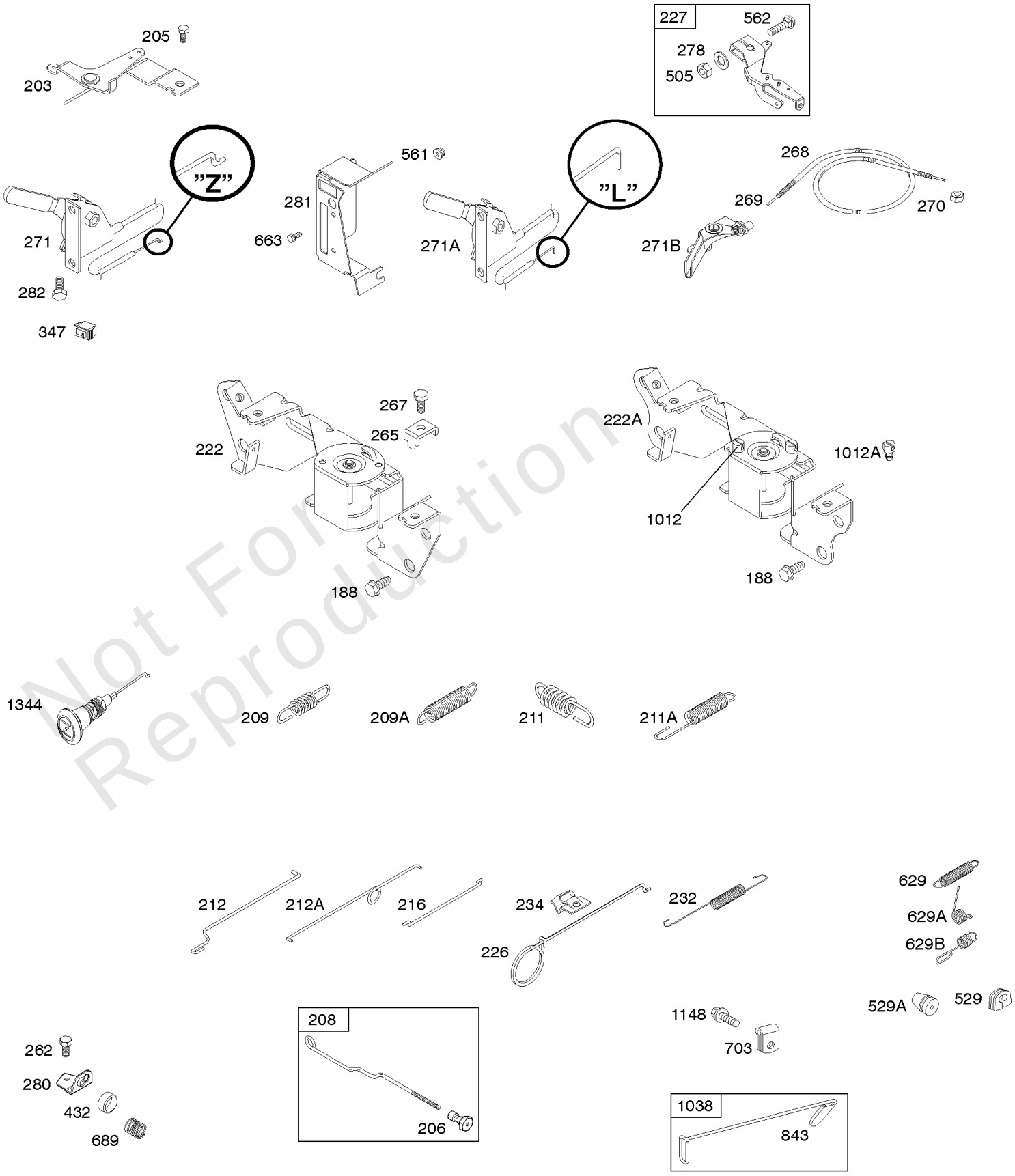


Not For Reproduction

## *Controls, Springs*

| REF NO | PART NO | QTY | DESCRIPTION |
|---|---|---|---|
| 663 | 692083 | | SCREW<br>-(Control Panel) |
| 689 | 691272 | | SPRING, Friction |
| 703 | 94484 | | CLAMP |
| 843 | 691322 | | SLEEVE, Lever |
| 1012 | 690592 | | RETAINER, Link |
| 1012A | 691521 | | RETAINER, Link |
| 1038 | 492374 | | ROD, Fuel Shut Off |
| 1148 | 94504 | | SCREW<br>-(Clip) |

Not For Reproduction

Copyright © Briggs & Stratton. All Rights reserved

Mfg. No: 303447-0474-01

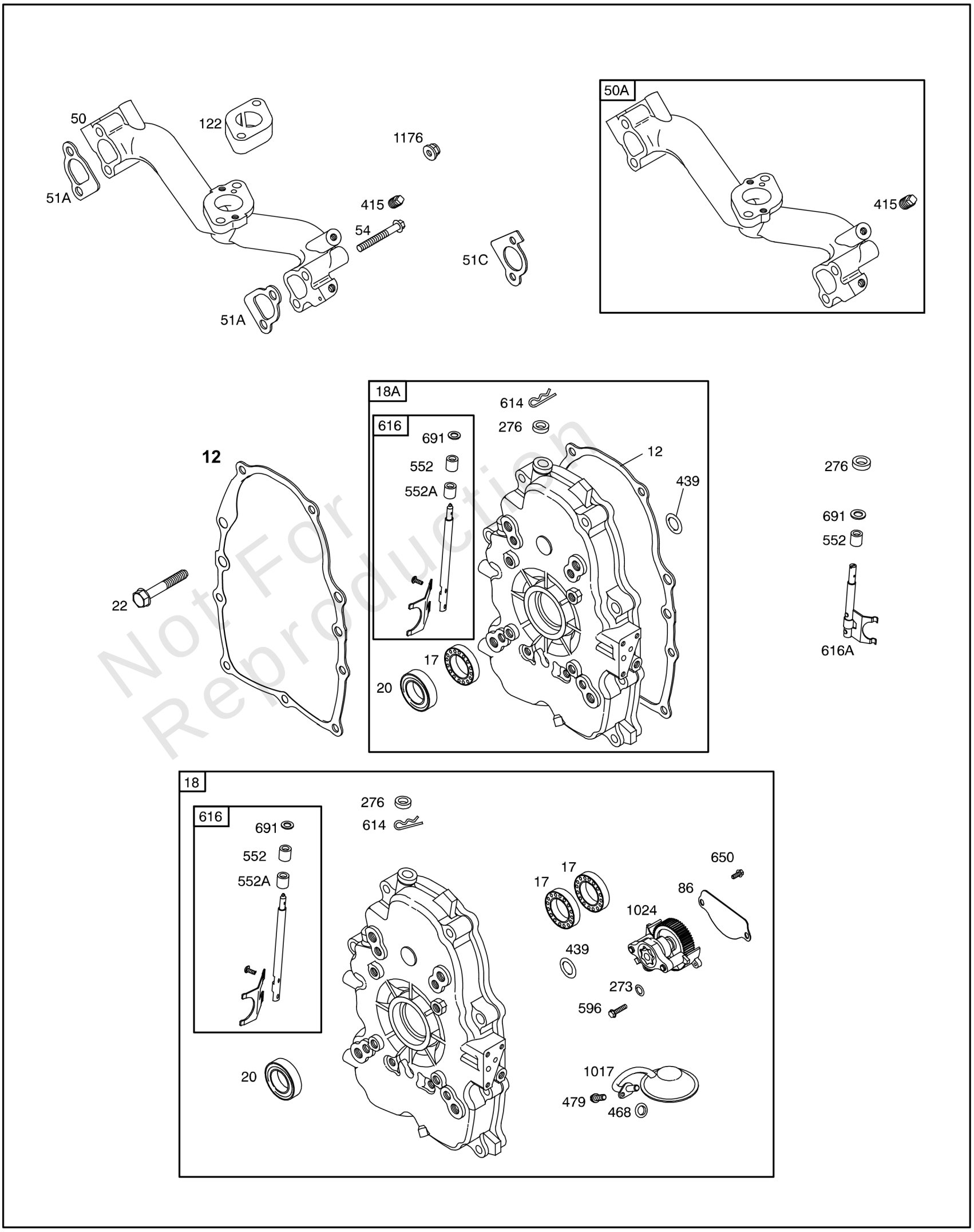


Not For Reproduction

## *Crankcase Cover, Intake Manifold*

| REF NO | PART NO | QTY | DESCRIPTION |
|---|---|---|---|
| 12 | 845254 | | GASKET-CRANKCASE |
| 17 | 843827 | | BEARING, Ball |
| 18 | 844588 | | COVER, Crankcase |
| 18A | 808849 | | COVER, Crankcase |
| 20 | 805049S | | SEAL, Oil<br>-(PTO Side) |
| 22 | 807362 | | SCREW<br>-(Crankcase Cover/Sump) |
| 50 | 690754 | | MANIFOLD, Intake |
| 50A | 805772 | | MANIFOLD, Intake |
| 51A | 692035 | | GASKET, Intake<br>-(Manifold to Cylinder Head) |
| 51C | 691694 | | GASKET, Intake<br>-(Carburetor To Manifold) |
| 54 | 690676 | | SCREW<br>-(Intake Manifold) |
| 86 | 690745 | | COVER, Gear |
| 122 | 690691 | | SPACER, Carburetor |
| 273 | 690681 | | SEAL, O-Ring<br>-(Oil Pump) |
| 276 | 690704 | | WASHER |
| 415 | 794903 | | PLUG<br>-(Intake Manifold) |
| 439 | 805198 | | SEAL, O-Ring<br>-(Crankcase Cover/Sump or Cylinder Assembly)<br>-Used Before Code Date 97050100 |
| 439 | 692154 | | O-RING, Oil Gallery<br>-(Crankcase Cover/Sump or Cylinder Assembly)<br>-Used After Code Date 97043000 |
| 468 | 690690 | | SEAL, O-Ring<br>-(Oil Pump Screen) |
| 479 | 807084 | | SCREW<br>-(Oil Pump Screen) |
| 552 | 690701 | | BUSHING, Governor Crank<br>-(Output End) |
| 552A | 806686 | | BUSHING, Governor Crank<br>-(Flanged) |
| 596 | 691492 | | SCREW<br>-(Oil Pump) |
| 614 | 691550 | | PIN, Cotter |
| 616 | 806685 | | CRANK, Governor<br>-Used After Code Date 99072000 |
| 616A | 690899 | | CRANK, Governor<br>-Used Before Code Date 99072100 |
| 650 | 841233 | | SCREW<br>-(Oil Deflector) |
| 691 | 842826 | | SEAL, Governor Shaft |
| 1017 | 690900 | | SCREEN, Oil Pump |
| 1024 | 843825 | | PUMP, Oil<br>-Used After Code Date 07101400 |
| 1024 | ----- | | Pump-Oil<br>-(Oil Pump is No Longer Available) (See Reference 18 for correctreplacement Crankcase Cover)<br>-Used Before Code Date 07101500 |
| 1176 | 842067 | | NUT<br>-(Exhaust Manifold) |

Not For Reproduction

Copyright © Briggs & Stratton. All Rights reserved

Mfg. No: 303447-0474-01

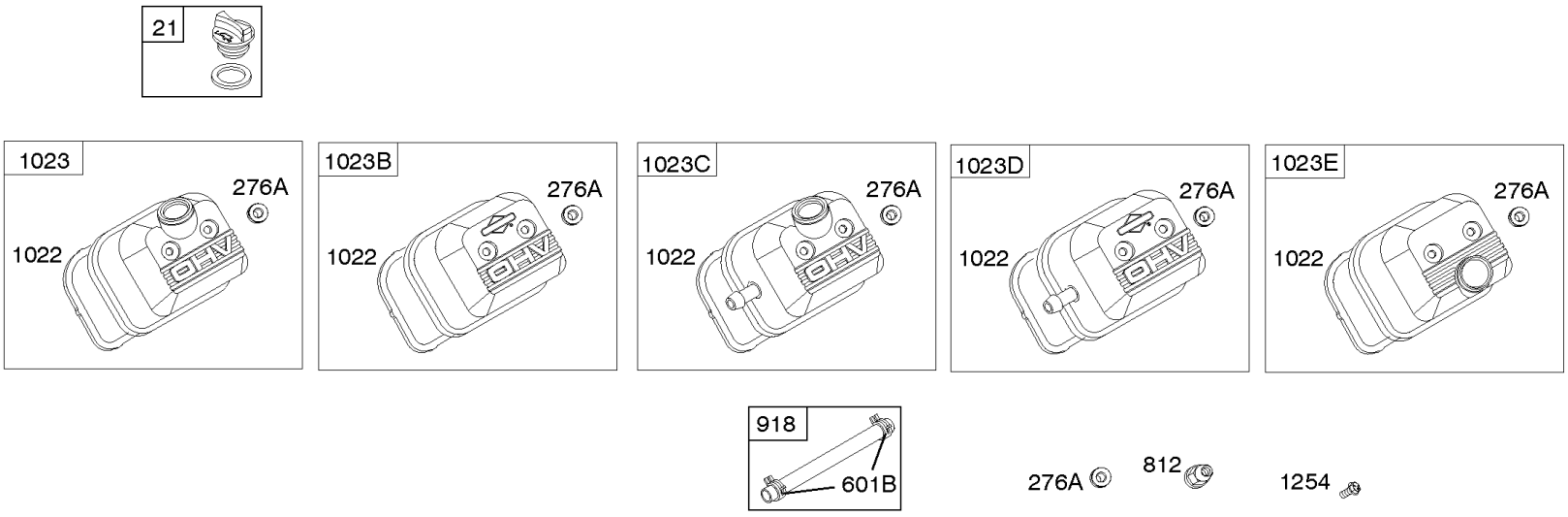


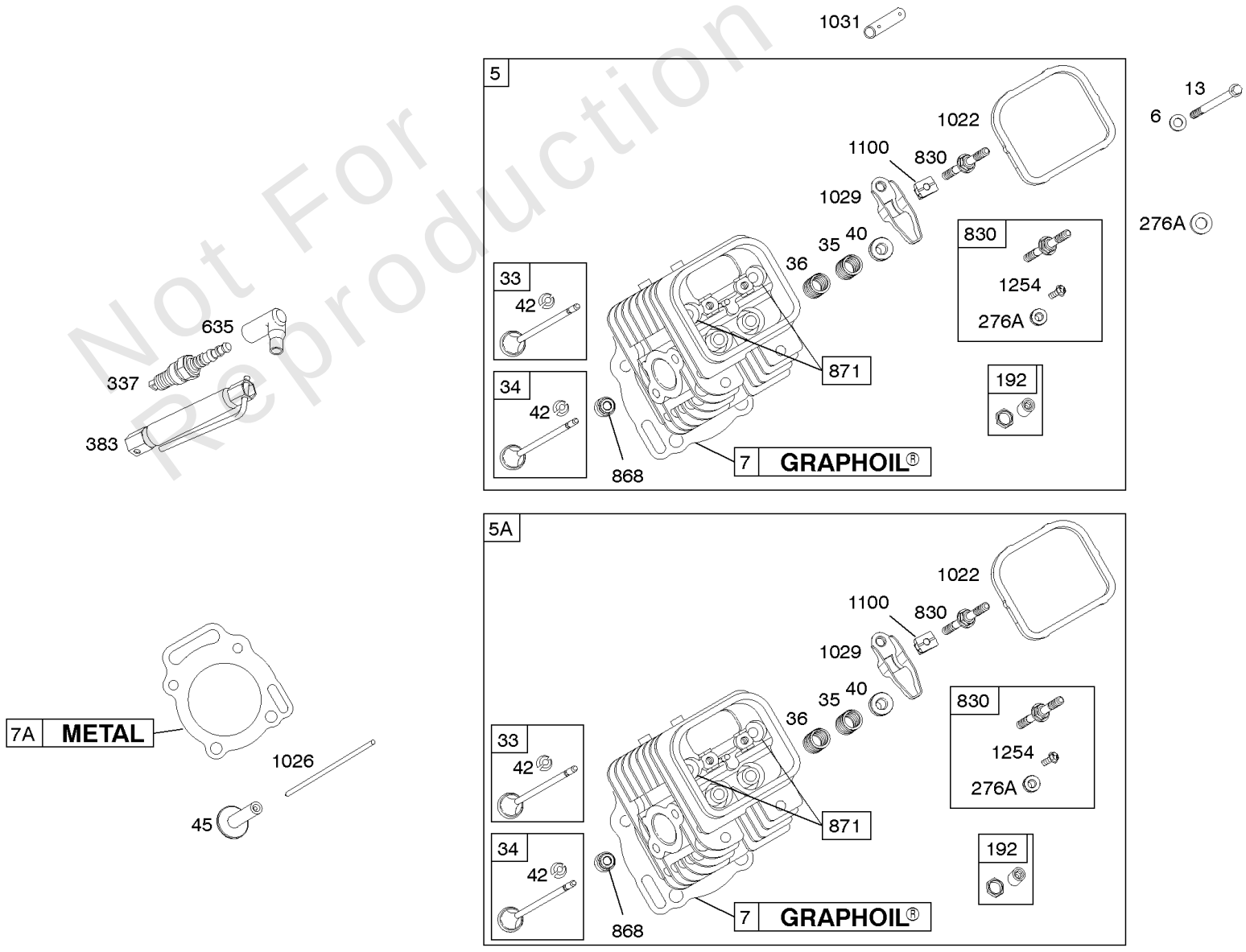


Not For Reproduction

## *Cylinder Head, Valves, Rocker Covers*

| REF NO | PART NO | QTY | DESCRIPTION |
|---|---|---|---|
| 5 | 809200 | | HEAD, Cylinder<br>-(Cylinder 1) |
| 5A | 845716 | | HEAD, Cylinder<br>-(Cylinder 2) |
| 6 | 805193 | | WASHER<br>-(Cylinder Head)<br>-Used Before Code Date 94050100 |
| 6 | 842122 | | WASHER<br>-(Cylinder Head)<br>-Used After Code Date 94043000 |
| 7 | 806085S | | GASKET, Cylinder Head<br>-(Graphoil)<br>-Used After Code Date 96033100 |
| 7A | 807986 | | GASKET, Cylinder Head<br>-(Metal)<br>-Used Before Code Date 96040100 |
| 13 | 692059 | | SCREW<br>-(Cylinder Head) |
| 21 | 809500 | | CAP, Oil Fill |
| 33 | 807681 | | VALVE, Exhaust |
| 34 | 807680 | | VALVE, Intake |
| 35 | 692084 | | SPRING, Valve<br>-(Intake) |
| 36 | 692084 | | SPRING, Valve<br>-(Exhaust) |
| 40 | 692058 | | RETAINER, Valve |
| 42 | 807683 | | KEEPER, Valve |
| 45 | 843379 | | TAPPET, Valve |
| 192 | 807623 | | ADJUSTER. Rocker Arm |
| 276A | 691766 | | WASHER, Sealing<br>-(Cylinder Head)<br>-Used Before Code Date 01120300 |
| 276A | 807085 | | WASHER, Sealing<br>-(Cylinder Head)<br>-Used After Code Date 01120200 |
| 337 | 491055S | | PLUG, Spark |
| 337 | 84007216 | 2 | PLUG, SPARK<br>-(China Only) |
| 383 | 19576S | | WRENCH, Spark Plug |
| 601B | 791850 | | CLAMP, Hose |
| 635 | 692076 | | BOOT, Spark Plug |
| 812 | 692055 | | NUT<br>-(Rocker Cover)<br>-Used Before Code Date 01120300 |
| 830 | 809157 | | STUD, Rocker Arm<br>-(Rocker Arm)<br>-Used After Code Date 96033100 |
| 830 | ----- | | Stud-Rocker Arm<br>-(NO LONGER AVAILABLE)<br>-Used Before Code Date 96040100 |
| 868 | 691963 | | SEAL, Valve |
| 871 | 692057 | | BUSHING, Valve Guide |
| 918 | 791880 | | HOSE, Vacuum<br>-(Rocker Cover To Impulse Pump)(Cut To Required Length) |
| 1022 | 806039S | | GASKET, Rocker Cover |
| 1023 | 843749 | | COVER, Rocker |
| 1023B | 691494 | | COVER, Rocker |
| 1023C | 690910 | | COVER, Rocker |

Not For Reproduction

Copyright © Briggs & Stratton. All Rights reserved

Mfg. No: 303447-0474-01

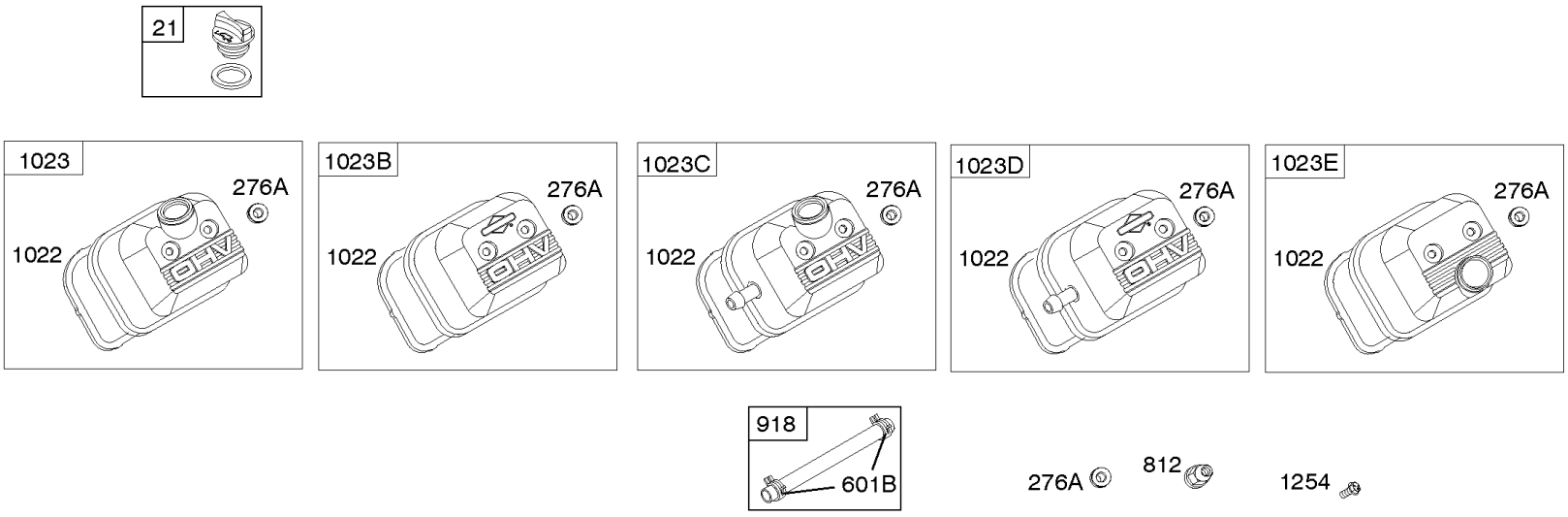


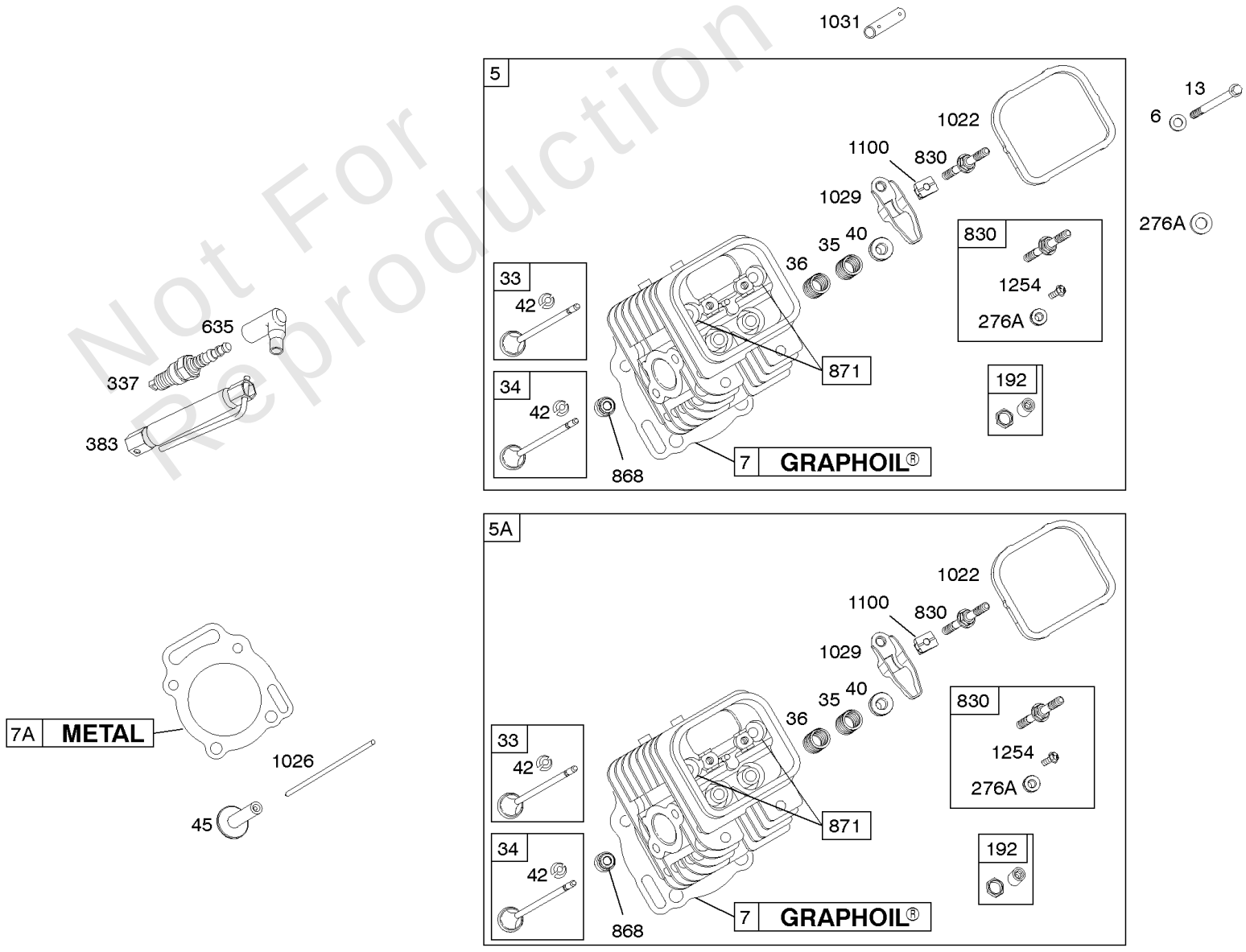


Not For Reproduction

| REF NO | PART NO | QTY | DESCRIPTION |
|---|---|---|---|
| 1023E | 691531 | | COVER, Rocker |
| 1023D | 691558 | | COVER, Rocker |
| 1026 | 691758 | | ROD, Push<br>-(Aluminum) |
| 1026 | 691836 | | ROD, Push<br>-(Steel) |
| 1029 | 807323 | | ARM, Rocker |
| 1031 | 690693 | | SHAFT, Rocker Arm |
| 1100 | 791959 | | PIVOT, Rocker Arm |
| 1254 | 807084 | | SCREW<br>-(Rocker Arm Stud) (Used on Stud For Rocker Cover)<br>-Used After Code Date 01120200 |

Not For Reproduction

Copyright © Briggs & Stratton. All Rights reserved

Mfg. No: 303447-0474-01

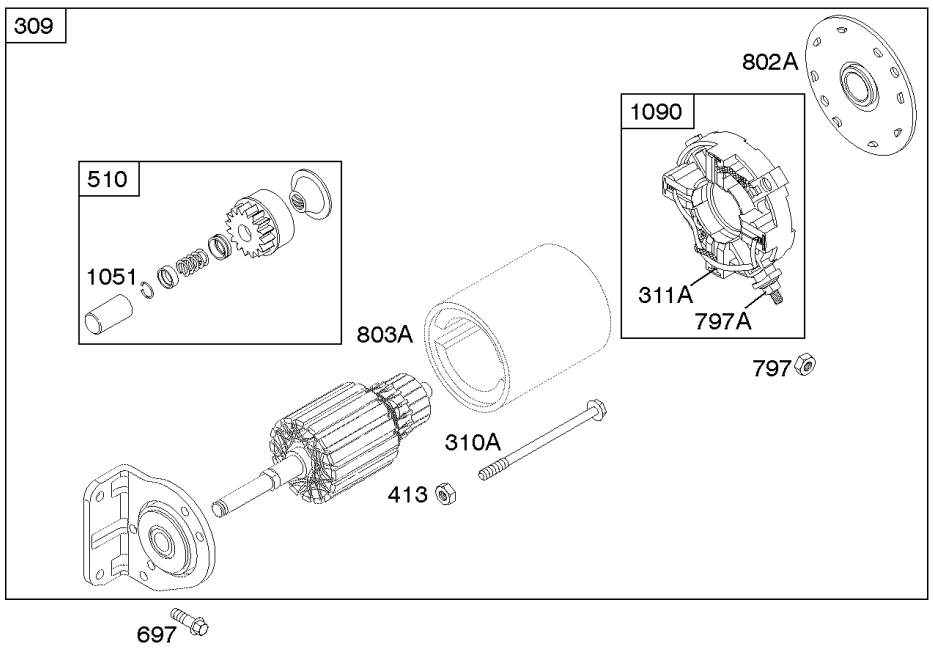


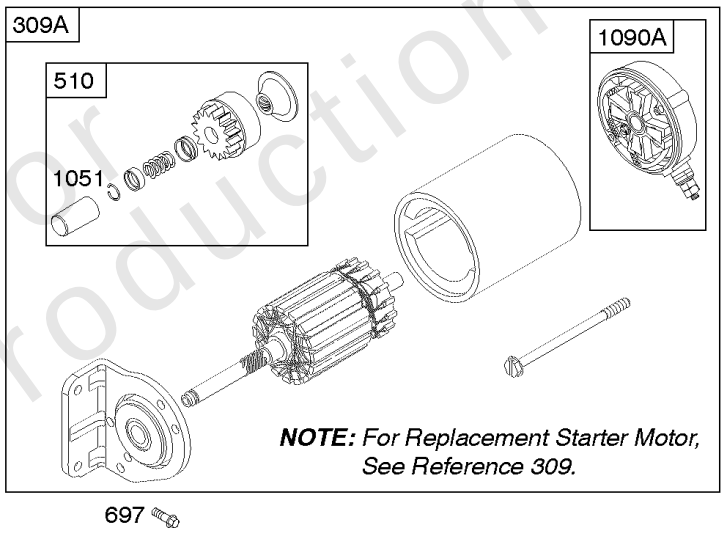


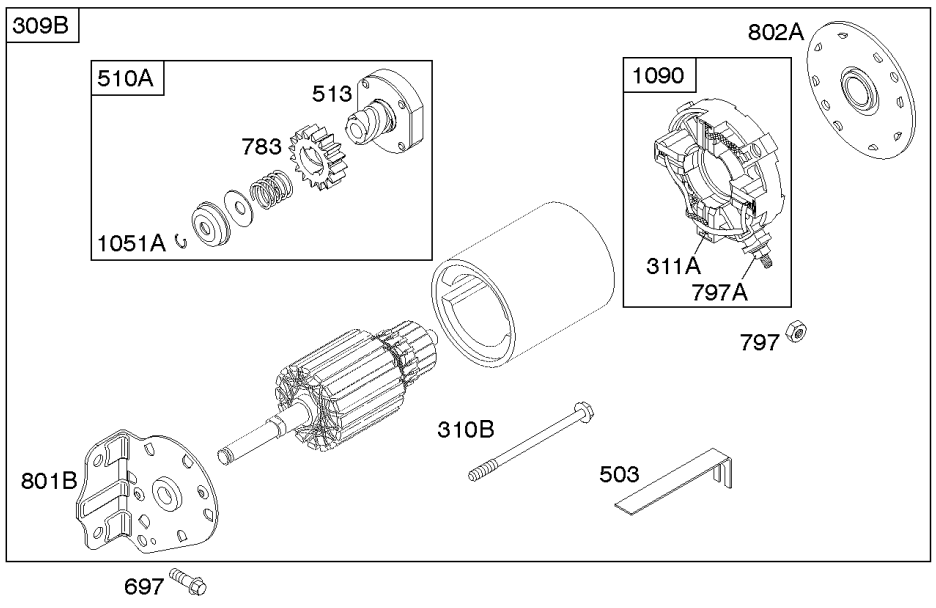


Not For Reproduction

Copyright © Briggs & Stratton. All Rights reserved

## *Electric Starter #1*

| REF NO | PART NO | QTY | DESCRIPTION |
|---|---|---|---|
| 309 | 691564 | | MOTOR-STARTER<br>-(Steel Ring Gear Only) |
| 309A | ----- | | Motor-Starter<br>-(NO LONGER AVAILABLE) |
| 309B | 795121 | | MOTOR-STARTER<br>-(Services Aluminum Ring Gear Only) |
| 310A | 690323 | | SCREW<br>-(Starter Motor) (4 7/16" Long) |
| 310B | 691263 | | BOLT<br>-(Starter Motor) (5-3/8 ) (4 3/8 Housing) |
| 311A | 497608 | | SET, Brush |
| 413 | 693587 | | NUT<br>-(Starter Motor) |
| 503 | 691532 | | STRAP, Starter |
| 510 | 496881 | | DRIVE, Starter<br>-(Steel Pinion Gear) |
| 510A | 696541 | | DRIVE, Starter |
| 513 | 692024 | | CLUTCH, Drive |
| 697 | 692062 | | SCREW<br>-(Drive Cap) |
| 783 | 695708 | | GEAR-PINION<br>-(Services Aluminum Ring Gear Only) |
| 797 | 691029 | | NUT<br>-(Brush Retainer) |
| 797A | 693167 | | NUT<br>-(Brush Retainer) |
| 801B | 691283 | | CAP, Drive |
| 802A | 691286 | | CAP, End |
| 803A | 693547 | | HOUSING, Starter<br>-(Replacement Starter Motor, Order Reference 309) |
| 1051 | 691124 | | RING, Retaining |
| 1051A | 691265 | | RING, Retaining |
| 1090 | 691293 | | RETAINER, Brush |
| 1090A | 496813 | | RETAINER, Brush |

Not For Reproduction

Copyright © Briggs & Stratton. All Rights reserved

# Electric Starter #2

Mfg. No: 303447-0474-01

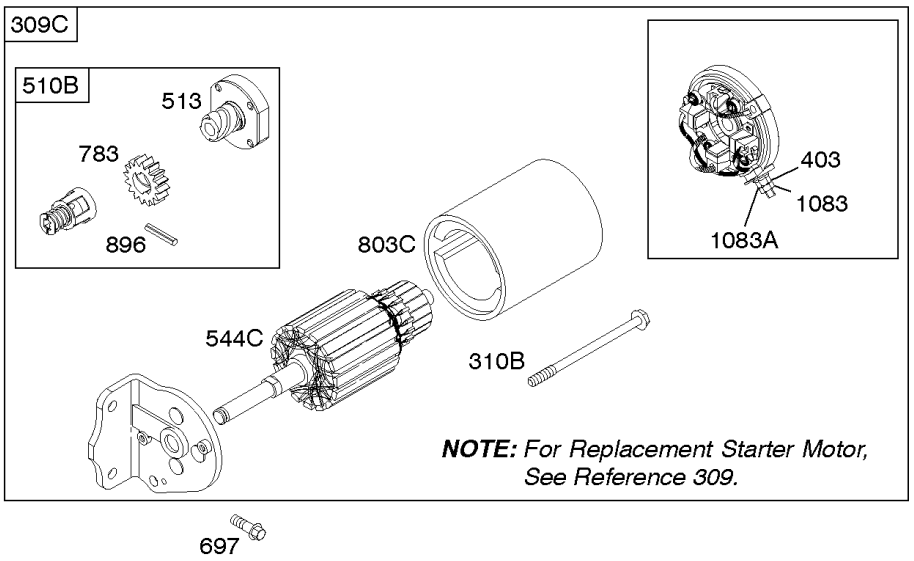


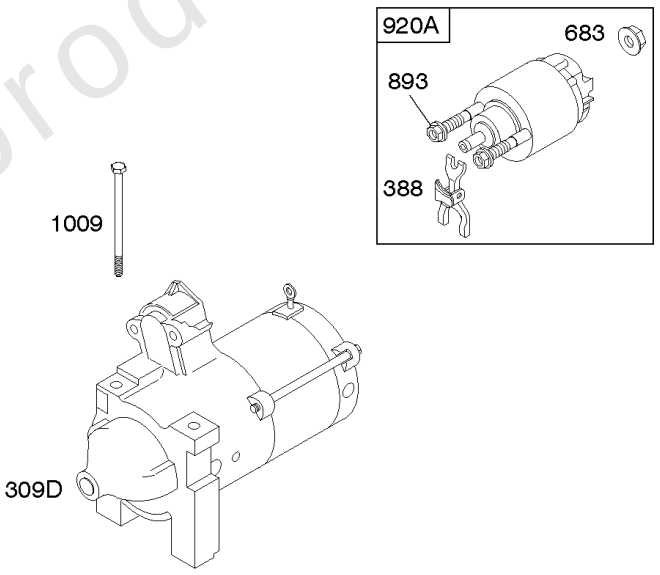


Not For Reproduction

## *Electric Starter #2*

| REF NO | PART NO | QTY | DESCRIPTION |
|---|---|---|---|
| 309C | ----- | | Motor-Starter<br>-(NO LONGER AVAILABLE) |
| 310B | 691263 | | BOLT<br>-(Starter Motor) (5-3/8 ) (4 3/8 Housing) |
| 403 | 690288 | | WASHER<br>-(End Cap) |
| 510B | 696540 | | DRIVE, Starter<br>-(4 3/8 Housing) |
| 513 | 692024 | | CLUTCH, Drive |
| 544C | 490309 | | ARMATURE, Starter<br>-(4 1/2 And 4 3/8 Housing) |
| 683 | 691029 | | NUT<br>-(Starter Solenoid) |
| 697 | 692062 | | SCREW<br>-(Drive Cap) |
| 783 | 695708 | | GEAR-PINION<br>-(Services Aluminum Ring Gear Only) |
| 803C | 494205 | | HOUSING, Starter<br>-(4 3/8 Housing) |
| 803C | 398892 | | HOUSING, Starter<br>-(4 9/16 Housing) |
| 896 | 691641 | | PIN, Drive Retainer |
| 1009 | 806474 | | SCREW<br>-(Starter Motor) |
| 1083 | 691626 | | NUT<br>-(End Cap) |
| 1083A | 690958 | | NUT<br>-(End Cap) |

Not For Reproduction

Copyright © Briggs & Stratton. All Rights reserved

# Electronic Governor

Mfg. No: 303447-0474-01

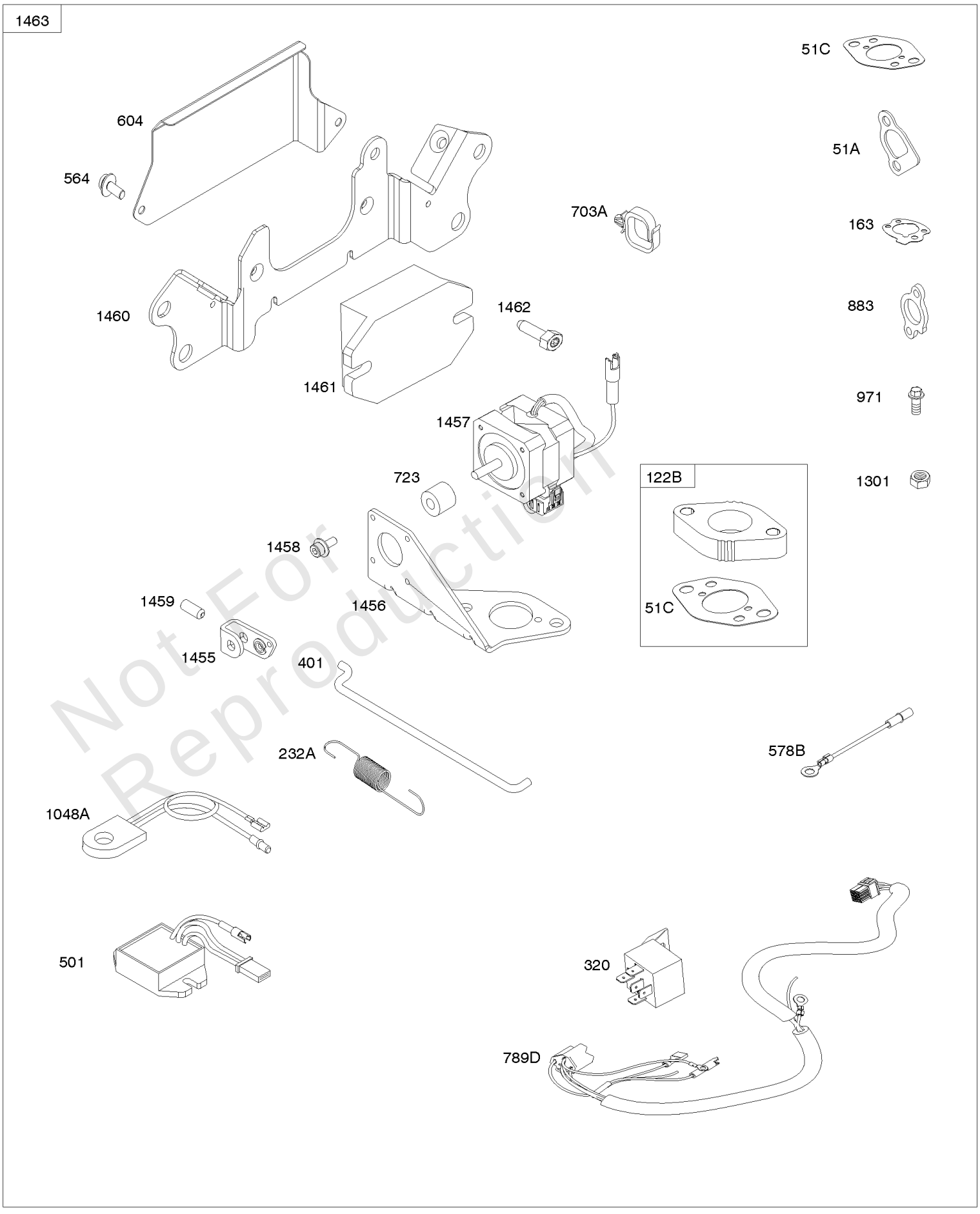


Not For Reproduction

## *Electronic Governor*

| REF NO | PART NO | QTY | DESCRIPTION |
|---|---|---|---|
| 51A | 692035 | | GASKET, Intake<br>-(Manifold to Cylinder Head) |
| 51C | 691694 | | GASKET, Intake<br>-(Carburetor To Manifold) |
| 122B | 845817 | | SPACER, Carburetor |
| 163 | 692081 | | GASKET, Air Cleaner<br>-(Air Cleaner) |
| 232A | 845816 | | SPRING/LINK, Governor |
| 320 | 1726829SM | | RELAY(S) |
| 401 | 845814 | | LINK, Actuator |
| 501 | 797375 | | REGULATOR<br>-(10 Amp Regulated) |
| 564 | 690677 | | SCREW<br>-(Control Cover) |
| 578B | 845849 | | WIRE ASSEMBLY |
| 604 | 845821 | | COVER, Control |
| 703A | 691010 | | CLIP |
| 723 | 845818 | | SEAL, Foam |
| 789D | 845788 | | HARNESS, Wiring |
| 883 | 691613 | | GASKET, Exhaust |
| 971 | 807084 | | SCREW<br>-(Air Cleaner Base to Carburetor) |
| 1048A | 845556 | | MODULE, Electronic Governor |
| 1301 | 845823 | | NUT<br>-(Wiring Harness) |
| 1455 | 845813 | | LEVER, Actuator |
| 1456 | 845815 | | BRACKET, Mounting |
| 1457 | 845819 | | MOTOR, Stepper |
| 1458 | 845812 | | SCREW<br>-(Stepper Motor) |
| 1459 | 845820 | | SCREW |
| 1460 | 845822 | | BRACKET, Control |
| 1461 | 845824 | | UNIT, Engine Control |
| 1462 | 792629 | | SCREW<br>-(Engine Control Unit) (ECU) |

Not For Reproduction

# Exhaust System #1

Mfg. No: 303447-0474-01

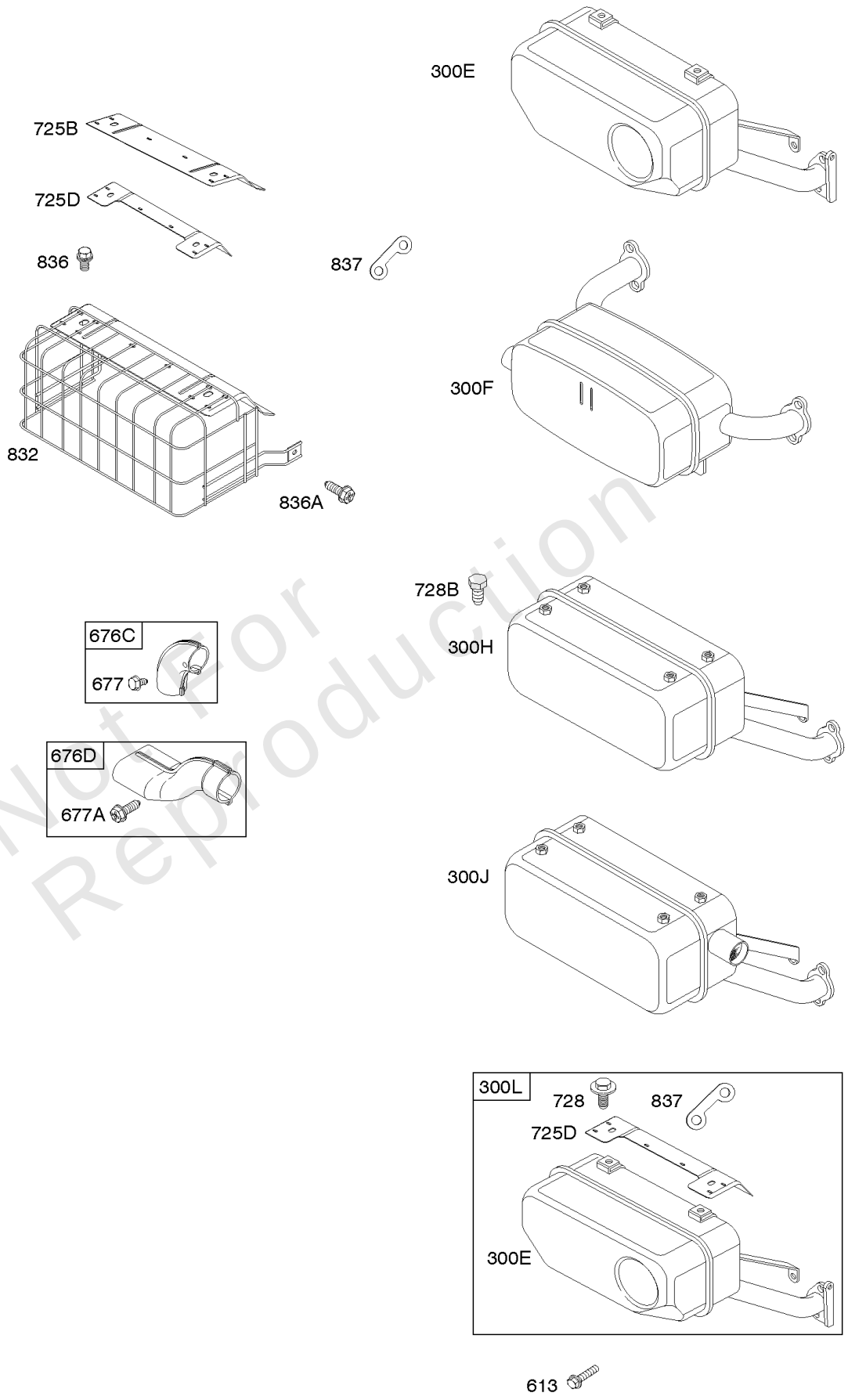


Not For Reproduction

## *Exhaust System #1*

| REF NO | PART NO | QTY | DESCRIPTION |
|---|---|---|---|
| 300E | 690906 | | MUFFLER<br>-(Cylinder 1)(Side Outlet)(Starter Motor Side) |
| 300F | 690931 | | MUFFLER<br>-(Hi Mount)(Starter Side Exit) |
| 300J | 807799 | | MUFFLER<br>-(Cylinder 2)(Side Outlet)(Oil Filter Side) |
| 300H | 807831 | | MUFFLER<br>-(Cylinder 1)(Side Outlet)(Starter Motor Side) |
| 300L | 808380 | | MUFFLER<br>-(Cylinder 1)(Side Outlet)(Starter Motor Side) |
| 613 | 691902 | | SCREW<br>-(Muffler) |
| 676C | 495518 | | DEFLECTOR, Muffler |
| 676D | 808394 | | DEFLECTOR, Muffler |
| 677 | 810079 | | SCREW<br>-(Muffler Deflector) |
| 677A | 690688 | | SCREW<br>-(Muffler Deflector) |
| 725B | 691498 | | SHIELD, Heat |
| 725D | 805702 | | SHIELD, Heat |
| 728 | 691514 | | SCREW<br>-(Heat Shield) |
| 728B | 805704 | | SCREW<br>-(Heat Shield) |
| 832 | 691571 | | GUARD, Muffler |
| 836 | 691514 | | SCREW<br>-(Muffler Guard) |
| 836A | 692067 | | SCREW<br>-(Muffler Guard) |
| 837 | 808085 | | SPACER, Muffler<br>-(Includes 2) |

Not For Reproduction

# Exhaust System #2

Mfg. No: 303447-0474-01

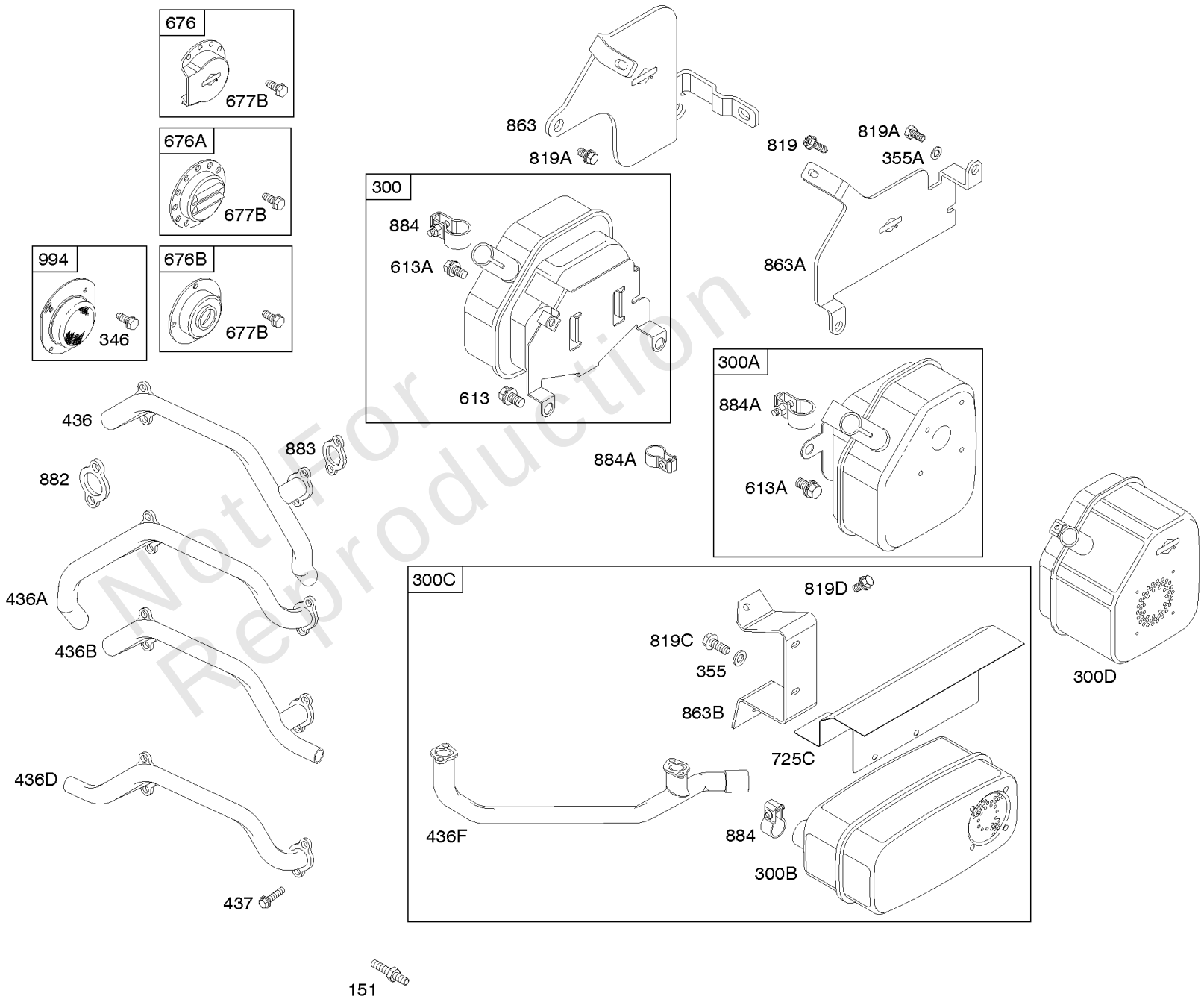


Not For Reproduction

## *Exhaust System #2*

| REF NO | PART NO | QTY | DESCRIPTION |
|---|---|---|---|
| 151 | 841185 | | STUD<br>-(Exhaust Manifold) |
| 300 | ----- | | Muffler<br>-(For Replacement Muffler, Order 692099) |
| 300A | 807742 | | MUFFLER<br>-(Cylinder 2) (Side Outlet) |
| 300B | 498984S | | MUFFLER<br>-(Super Lo Tone) |
| 300D | 692099 | | MUFFLER |
| 300C | 807752 | | MUFFLER<br>-(Low Mount) |
| 346 | 690661 | | SCREW<br>-(Spark Arrestor) |
| 355 | 842122 | | WASHER<br>-(Muffler Bracket) |
| 355A | 690944 | | WASHER<br>-(Muffler Bracket) |
| 436 | 692061 | | MANIFOLD, Exhaust<br>-(Cylinder 2) (Side Outlet) |
| 436A | 691499 | | MANIFOLD, Exhaust<br>-(Cylinder 2) (Side Outlet) |
| 436B | 691501 | | MANIFOLD, Exhaust<br>-(Cylinder 1) (Side Outlet) |
| 436D | 691502 | | MANIFOLD, Exhaust<br>-(Used With Muffler Supplied By Customer) |
| 436F | 805609 | | MANIFOLD, Exhaust<br>-(Used With Muffler Supplied By Customer) |
| 437 | 691902 | | SCREW<br>-(Exhaust Manifold) |
| 613 | 691902 | | SCREW<br>-(Muffler) |
| 613A | 692067 | | SCREW<br>-(Muffler) |
| 676 | 795036 | | DEFLECTOR, Muffler<br>-(Side Out) |
| 676A | 795038 | | DEFLECTOR, Muffler<br>-(Louvered) |
| 676B | 396903 | | DEFLECTOR, Muffler<br>-(Direct Out) |
| 677B | 690661 | | SCREW<br>-(Muffler Deflector) |
| 725C | 806102 | | SHIELD, Heat |
| 819 | 690297 | | SCREW<br>-(Muffler Bracket)<br>-Used After Code Date 97012300 |
| 819 | 692198 | | SCREW<br>-(Muffler Bracket)<br>-Used Before Code Date 97012400 |
| 819A | 692056 | | SCREW<br>-(Muffler Bracket) (14 mm ) |
| 819A | 690943 | | SCREW<br>-(Muffler Bracket) (16mm ) |
| 819D | 692062 | | SCREW<br>-(Muffler Bracket) |
| 819C | 692067 | | SCREW<br>-(Muffler Bracket) (12 mm Long) |
| 819C | 807084 | | SCREW<br>-(Muffler Bracket) |
| 863 | 691513 | | BRACKET, Muffler<br>-(Cylinder 2 Side) |

Not For Reproduction

Copyright © Briggs & Stratton. All Rights reserved

# Exhaust System #2

Mfg. No: 303447-0474-01

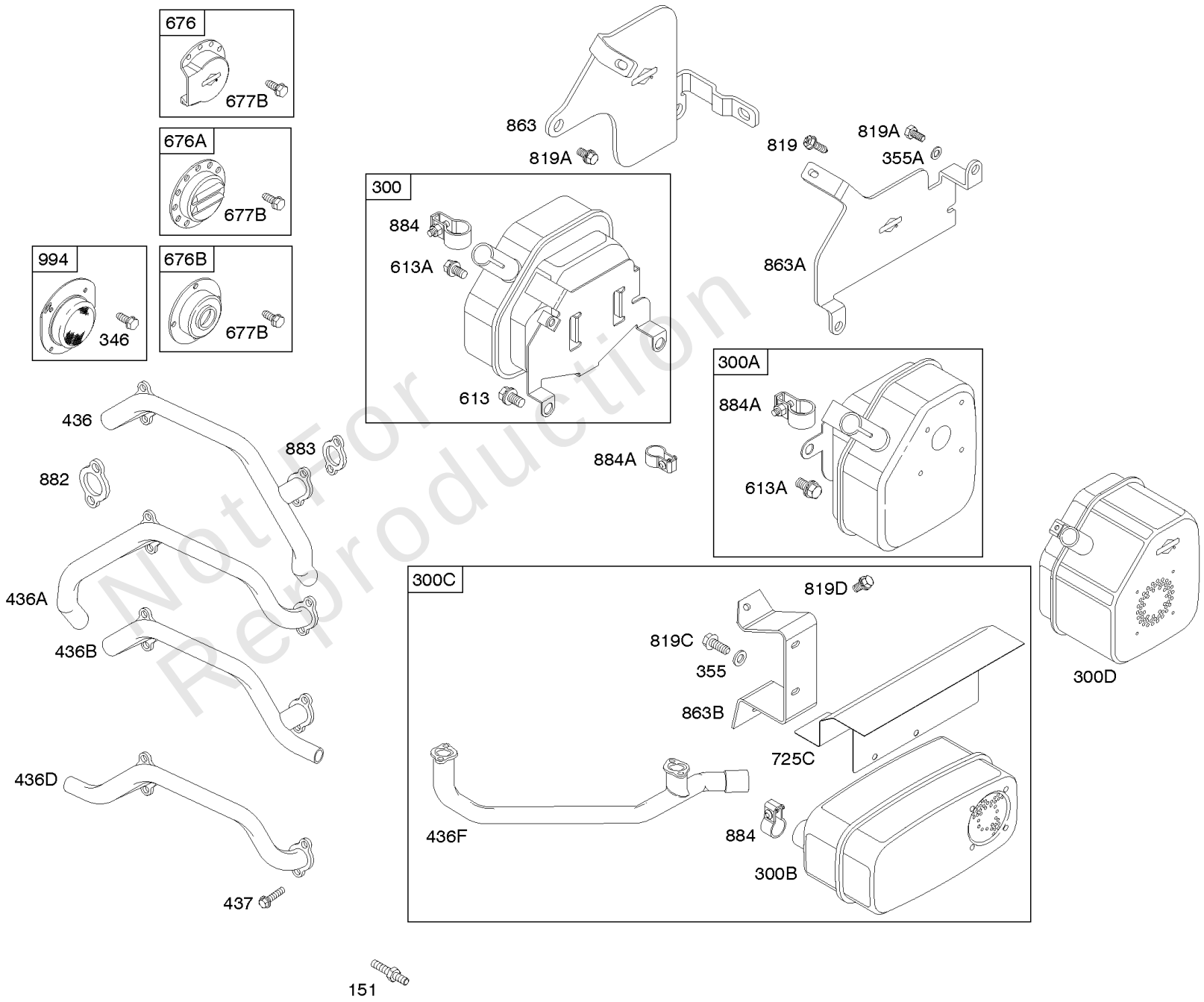


Not For Reproduction

## *Exhaust System #2*

| REF NO | PART NO | QTY | DESCRIPTION |
|---|---|---|---|
| 863A | 690756 | | BRACKET, Muffler -(Cylinder 2 Side) |
| 863B | 806759 | | BRACKET, Muffler |
| 882 | 692074 | | FLANGE, Exhaust |
| 883 | 691613 | | GASKET, Exhaust |
| 884 | 690898 | | CLAMP, Muffler |
| 884A | 691956 | | CLAMP, Muffler |
| 994 | 794945 | | ARRESTOR, Spark |

Not For Reproduction

Copyright © Briggs & Stratton. All Rights reserved

Mfg. No: 303447-0474-01

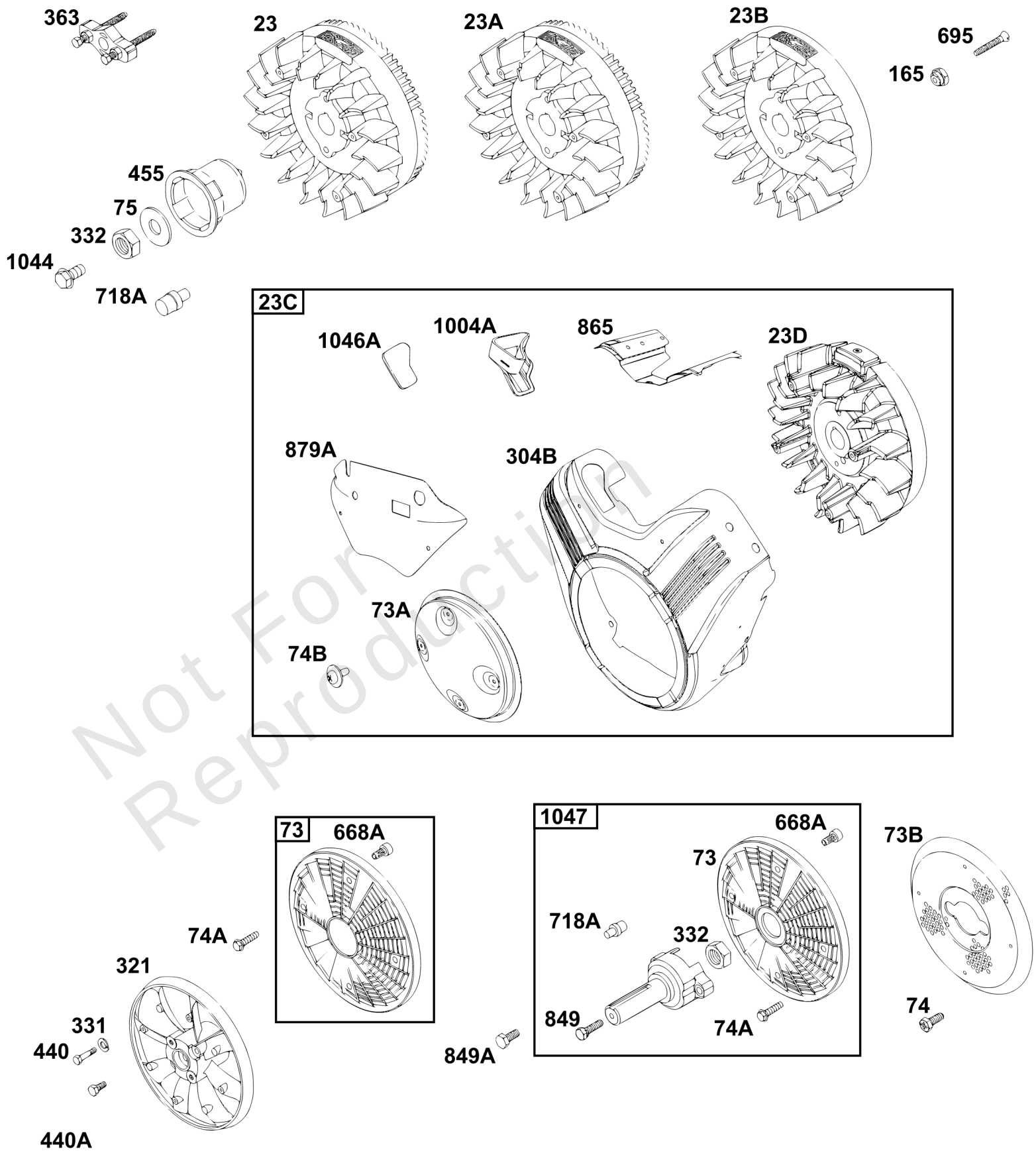


Not For Reproduction

Copyright © Briggs & Stratton. All Rights reserved

## *Flywheel, Starter Kit, Rotating Screens*

| REF NO | PART NO | QTY | DESCRIPTION |
|---|---|---|---|
| 23 | 808770 | | FLYWHEEL |
| 23B | 690889 | | FLYWHEEL<br>-(Rewind Starter) |
| 23C | REF_23C | | FLYWHEEL<br>-(No Longer Available) |
| 23D | 842514 | | FLYWHEEL |
| 73 | 494439 | | SCREEN, Rotating<br>-(Flush) |
| 73A | 841440 | | SCREEN, Rotating |
| 73B | 690478 | | SCREEN-ROTATING |
| 74 | 691655 | | SCREW<br>-(Rotating Screen) |
| 74A | 691647 | | SCREW<br>-(Rotating Screen) |
| 74B | 841441 | | SCREW<br>-(Rotating Screen) |
| 75 | 691490 | | WASHER<br>-(Flywheel) |
| 165 | 693148 | | NUT<br>-(Ring Gear) |
| 304B | 842681 | | HOUSING, Blower |
| 321 | 690379 | | FAN, Booster |
| 331 | 691075 | | WASHER<br>-(Booster Fan) |
| 332 | 690887 | | NUT<br>-(Flywheel) |
| 363 | 19203 | | PULLER, Flywheel |
| 440 | 690335 | | SCREW<br>-(Booster Fan) |
| 440A | 690342 | | SCREW<br>-(Booster Fan) |
| 455 | 805153 | | CUP, Flywheel<br>-Used Before Code Date 93072600 |
| 455 | 691517 | | CUP, Flywheel<br>-Used After Code Date 93072500 |
| 668A | 691500 | | SPACER |
| 695 | 693109 | | SCREW<br>-(Ring Gear) |
| 718A | 805102 | | PIN, Locating<br>-Used Before Code Date 90091100 |
| 718B | 690740 | | PIN, Locating |
| 849 | 691088 | | SCREW<br>-(Stub Shaft) |
| 849A | 690342 | | SCREW<br>-(Stub Shaft) |
| 865 | 843768 | | COVER, Air Guide |
| 879A | 842123 | | COVER, Carburetor/EFI |
| 1004A | 841656 | | DUCT, Air |
| 1044 | 692056 | | SCREW<br>-(Flywheel) |
| 1046A | 843068 | | PLUG, Blower Housing |
| 1047 | 841580 | | SHAFT, Stub |

Not For Reproduction

Copyright © Briggs & Stratton. All Rights reserved

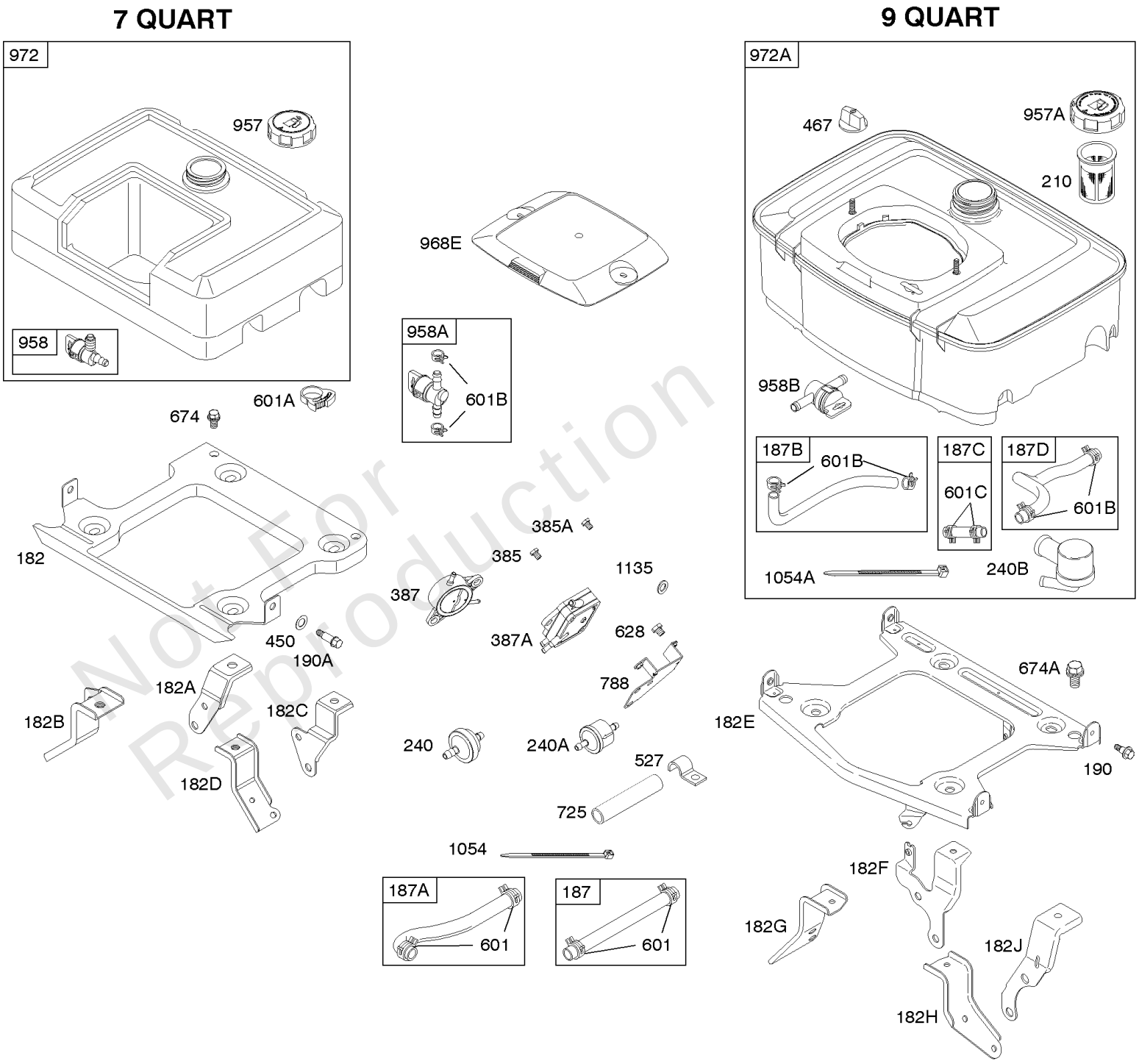


Not For Reproduction

## *Fuel Supply*

| REF NO | PART NO | QTY | DESCRIPTION |
|---|---|---|---|
| 7 | 806085S | | GASKET, Cylinder Head<br>-(Graphoil)<br>-Used After Code Date 96033100 |
| 9 | 844986 | | GASKET, Breather |
| 182 | 492317 | | BRACKET, Fuel Tank |
| 182A | 690778 | | BRACKET, Fuel Tank |
| 182E | 841601 | | BRACKET-FUEL TANK |
| 182B | 690779 | | BRACKET, Fuel Tank |
| 182C | 690780 | | BRACKET, Fuel Tank |
| 182D | 690781 | | BRACKET, Fuel Tank |
| 182F | 691520 | | BRACKET, Fuel Tank |
| 182H | 691524 | | BRACKET, Fuel Tank |
| 182J | 691525 | | BRACKET, Fuel Tank |
| 182G | 841600 | | BRACKET, Fuel Tank |
| 187 | 791745 | | LINE, Fuel<br>-(Cut To Required Length) |
| 187A | 791801 | | HOSE, Vacuum<br>-(Molded) |
| 187B | 692107 | | LINE, Fuel |
| 187C | 692106 | | LINE, Fuel |
| 187D | 692108 | | LINE, Fuel |
| 190 | 692199 | | SCREW<br>-(Fuel Tank) |
| 190A | 94536 | | SCREW<br>-(Fuel Tank) |
| 210 | 691370 | | STRAINER, Fuel |
| 240 | 298090S | | FILTER, Fuel |
| 240A | 84001895 | | FILTER, Fuel |
| 240B | 808116S | | FILTER, Fuel |
| 385 | 807084 | | SCREW<br>-(Fuel Pump) |
| 385A | 693169 | | SCREW<br>-(Fuel Pump) |
| 387 | 808656 | | PUMP, Fuel |
| 450 | 806497 | | WASHER<br>-(Fuel Tank Bracket) |
| 467 | 691985 | | KNOB, Air Cleaner Cover |
| 527 | 690423 | | CLAMP, Tube |
| 601 | 691038 | | CLAMP, Hose |
| 601A | 805813 | | CLAMP, Hose |
| 601B | 791850 | | CLAMP, Hose |
| 601C | 691522 | | CLAMP, Hose |
| 628 | 806660 | | SCREW<br>-(Fuel Pump Bracket) |
| 674 | 692056 | | SCREW<br>-(Fuel Tank Bracket) (M8 X 14) |
| 674A | 692062 | | SCREW<br>-(Fuel Tank Bracket) (M8X18mm) |
| 725 | ----- | | Shield-Heat<br>-(NO LONGER AVAILABLE) |
| 788 | 691559 | | BRACKET, Fuel Pump |
| 957 | 491367S | | CAP, Fuel Tank<br>-(Plastic) |
| 957A | 795027 | | CAP, Fuel Tank<br>-(Plastic) |

Not For Reproduction

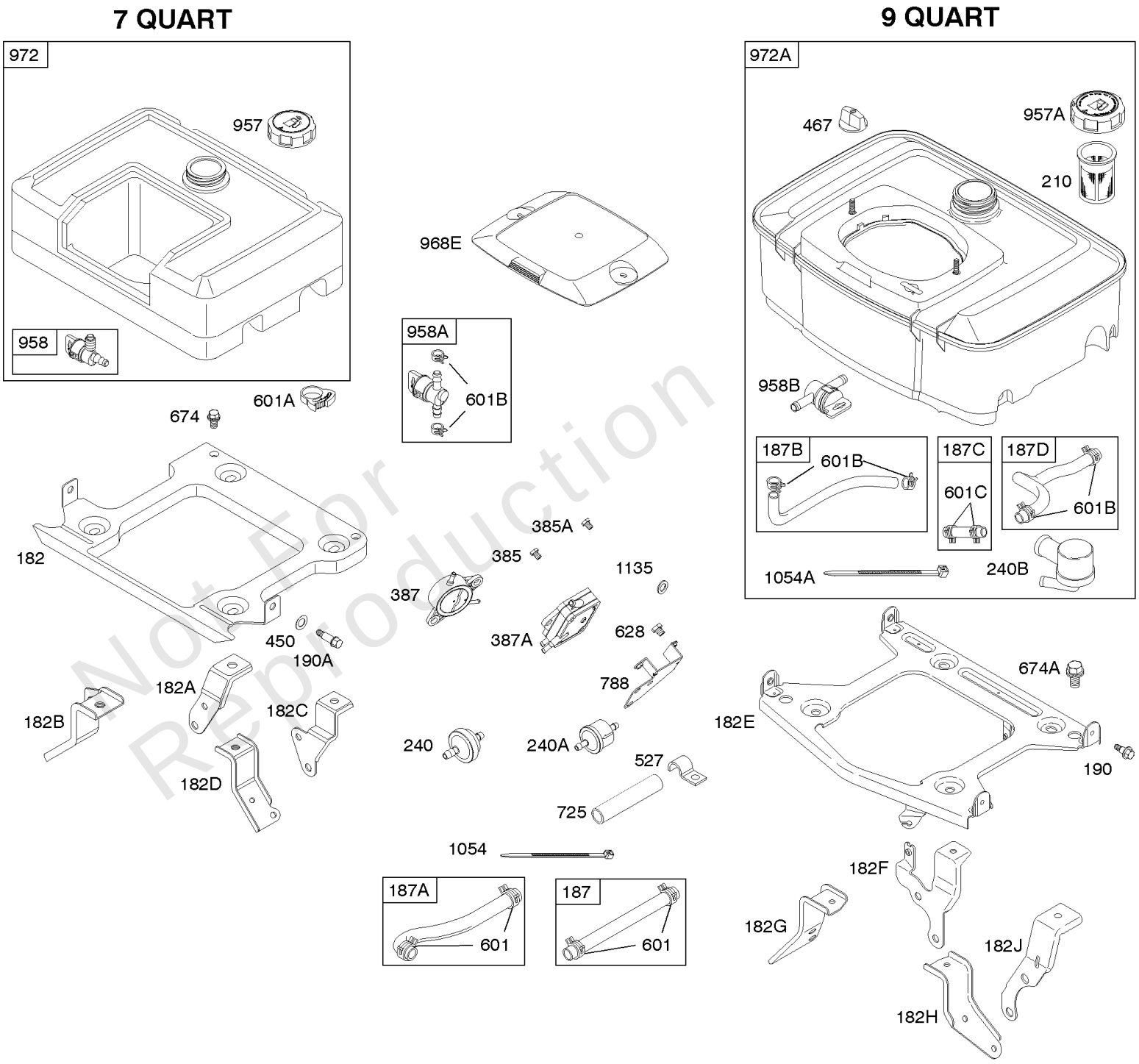


Not For Reproduction

## *Fuel Supply*

| REF NO | PART NO | QTY | DESCRIPTION |
|---|---|---|---|
| 958 | 698182 | | VALVE, Fuel Shut Off<br>-(Plastic) |
| 958B | 692008 | | VALVE, Fuel Shut Off<br>-(Plastic) |
| 968E | 691334 | | COVER, Air Cleaner |
| 972 | 492369 | | TANK, Fuel<br>-(Plastic) (7 Quart)(Plastic) |
| 972A | 845137 | | TANK-FUEL<br>-(Plastic) (9 Quart) |
| 1054 | 280275 | | TIE, Cable |
| 1054A | 710349 | | TIE, Cable |
| 1135 | 806497 | | WASHER<br>-(Crankcase Cover/Sump) |

Not For Reproduction

Mfg. No: 303447-0474-01

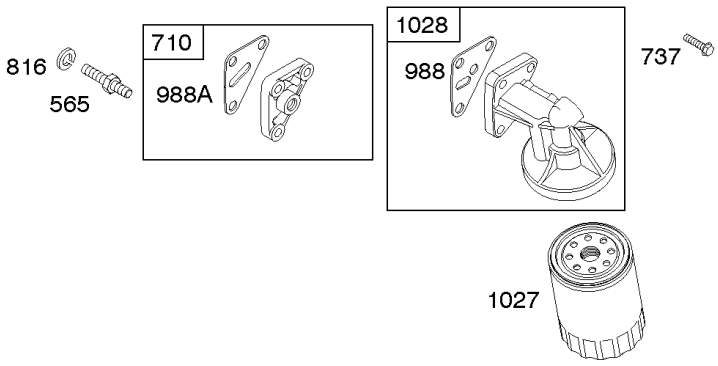


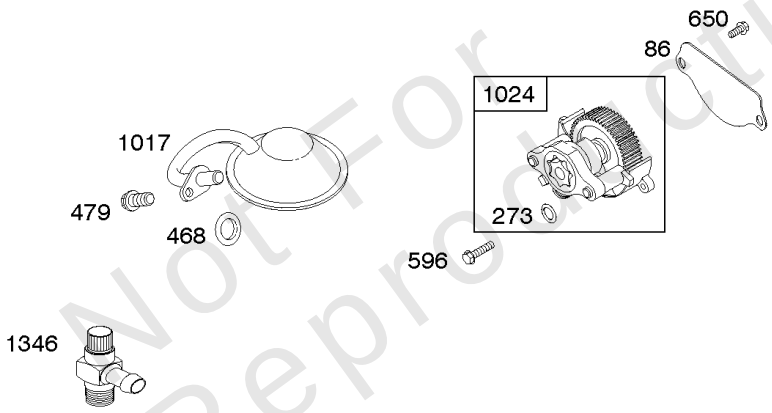


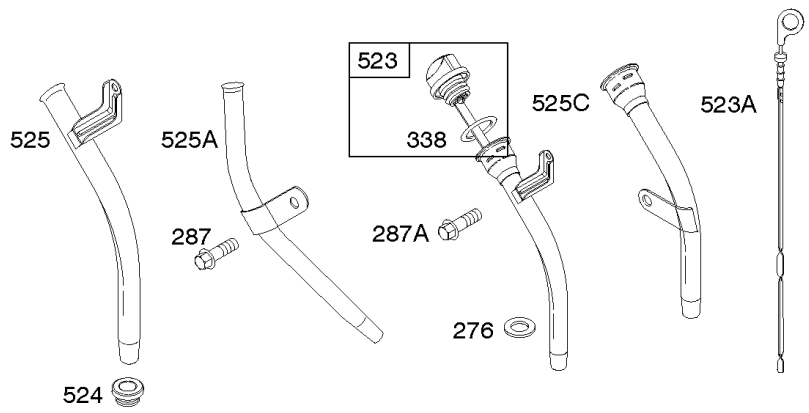


Not For Reproduction

Copyright © Briggs & Stratton. All Rights reserved

| REF NO | PART NO | QTY | DESCRIPTION |
|---|---|---|---|
| 86 | 690745 | | COVER, Gear |
| 273 | 690681 | | SEAL, O-Ring<br>-(Oil Pump) |
| 276 | 690704 | | WASHER |
| 287 | 806660 | | SCREW<br>-(Dipstick Tube) (Special) |
| 287A | 692062 | | SCREW<br>-(Dipstick Tube) |
| 338 | 690611 | | SEAL, O-Ring<br>-(Dipstick Tube) |
| 468 | 690690 | | SEAL, O-Ring<br>-(Oil Pump Screen) |
| 479 | 807084 | | SCREW<br>-(Oil Pump Screen) |
| 523 | 692100 | | DIPSTICK<br>-(Standard)<br>-Used Before Code Date 98060100 |
| 523A | 693175 | | DIPSTICK<br>-(Special)<br>-Used After Code Date 98053100 |
| 524 | 693172 | | SEAL, O-Ring<br>-(Dipstick Tube)<br>-Used After Code Date 98053100 |
| 524 | 281370S | | SEAL, Dipstick Tube<br>-(Dipstick Tube)<br>-Used Before Code Date 98060100 |
| 525 | 693174 | | TUBE, Dipstick<br>-(Standard)<br>-Used After Code Date 98053100 |
| 525C | 690897 | | TUBE, Dipstick<br>-Used Before Code Date 98060100 |
| 565 | 690682 | | STUD<br>-(Oil Filter Adapter) |
| 596 | 691492 | | SCREW<br>-(Oil Pump) |
| 650 | 841233 | | SCREW<br>-(Oil Deflector) |
| 710 | 807689 | | COVER, Oil Filter |
| 737 | 690679 | | SCREW<br>-(Oil Filter Adapter) |
| 816 | 690706 | | WASHER<br>-(Oil Filter Adapter) |
| 988 | 692063 | | GASKET, Oil Adapter |
| 988A | 690687 | | GASKET, Oil Adapter |
| 1017 | 690900 | | SCREEN, Oil Pump |
| 1024 | ----- | | Pump-Oil<br>-(Oil Pump is No Longer Available) (See Reference 18 for correctreplacement Crankcase Cover)<br>-Used Before Code Date 07101500 |
| 1024 | 843825 | | PUMP, Oil<br>-Used After Code Date 07101400 |
| 1027 | 491056 | | FILTER-OIL<br>-(3 1/4) |
| 1027 | 842921 | | FILTER, Oil |
| 1028 | 808235 | | ADAPTER, Oil Filter |

Not For Reproduction

Copyright © Briggs & Stratton. All Rights reserved

## *Replacement Engine - US & Canada*

| REF NO | PART NO | QTY | DESCRIPTION |
|---|---|---|---|
| | 3054470568 | 1 | Replacement Engine |
| | 494056 | 1 | Replacement Short Block |
| | 692162 | 1 | CRANKSHAFT<br>-Add Part |
| | 692161 | 1 | CRANKSHAFT<br>-Remove Part |
| | ----- | | Top No-Load Speed: 3600<br>-Trim: ALL |
| | ----- | | Service Note: Transfer Blower Housing, Flywheel and Booster Fan Group to replacement engine. Transfer Electric Starter if original Flywheel is equipped with an aluminum ring gear . |
| | ----- | | Service Note: Transfer the Muffler and/or Spark Arrester Assembly from the original engine if suitable for additional service, or add new parts as required. In some cases it maybe necessary to transfer the Oil Filter Adapter to the replacement engine. |
| | ----- | | Service Note: For all Go-Karts use only a Model 136200 series engine as a replacement, regardless of the original Model. |

Not For Reproduction

# Rewind Starter

Mfg. No: 303447-0474-01

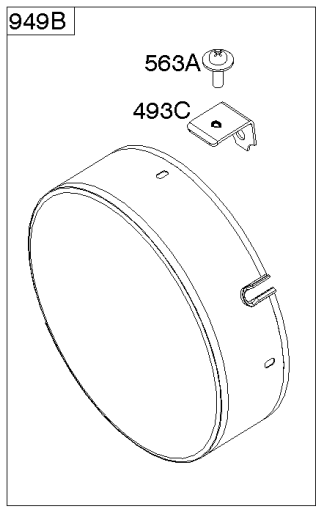


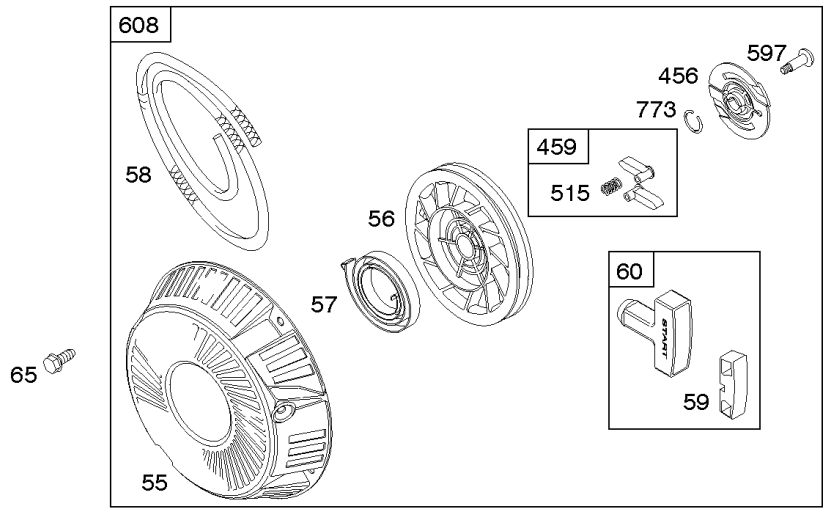


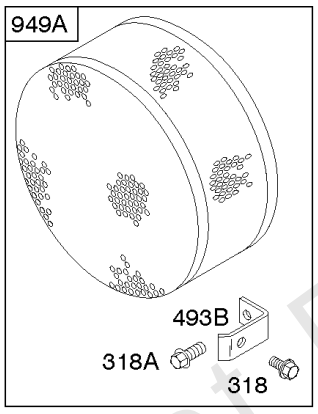


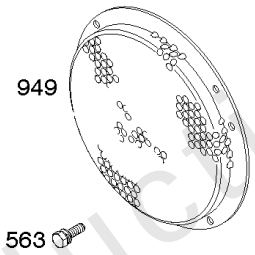


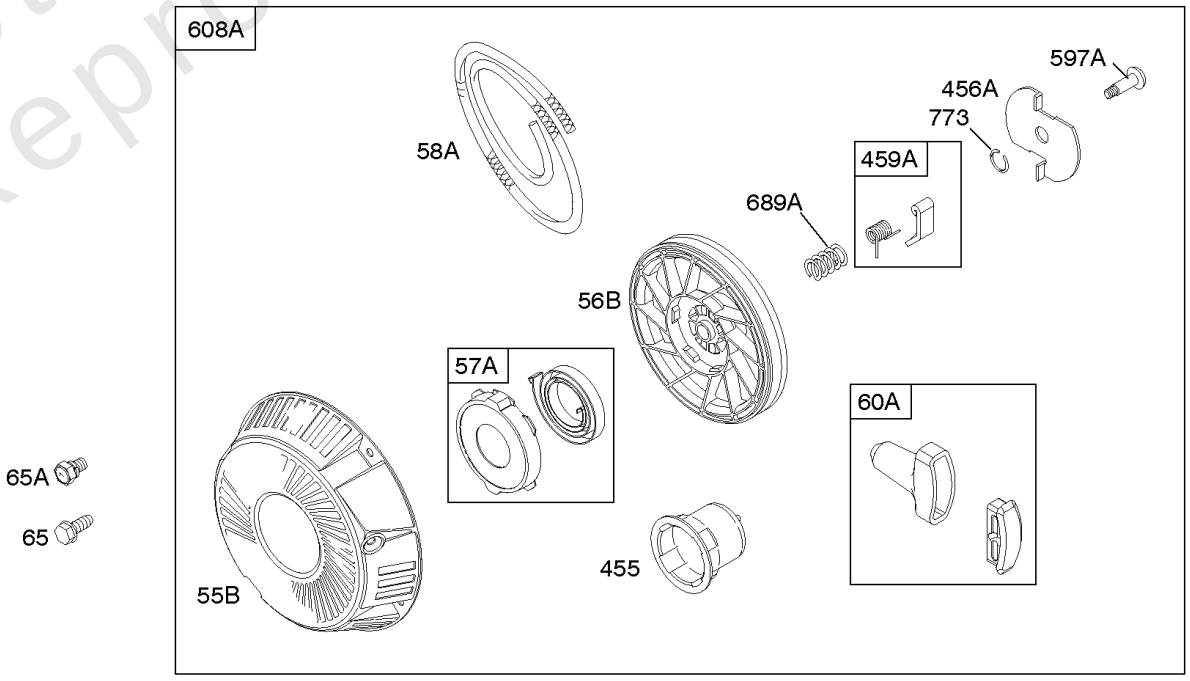


Not For Reproduction

## *Rewind Starter*

| REF NO | PART NO | QTY | DESCRIPTION |
|---|---|---|---|
| 55 | 691568 | | HOUSING, Rewind Starter |
| 55B | 492193 | | HOUSING, Rewind Starter |
| 56 | 692085 | | PULLEY, Rope Starter |
| 57 | 692086 | | SPRING, Rewind Starter |
| 57A | 492194 | | SPRING, Rewind Starter |
| 58 | 66574 | | ROPE, Starter<br>-(Cut To Required Length) |
| 58A | 695002 | | ROPE, Starter<br>-(Cut To Required Length) |
| 59 | 805957 | | INSERT, Grip |
| 60 | 808167 | | GRIP, Starter Rope |
| 60A | 490652 | | GRIP-STARTER ROPE |
| 65 | 691982 | | SCREW<br>-(Rewind Starter) |
| 65A | 841233 | | SCREW<br>-(Rewind Starter)<br>-Used After Code Date 03120900 |
| 318 | 806870 | | SCREW<br>-(Mounting Bracket) |
| 318A | 691982 | | SCREW<br>-(Mounting Bracket) |
| 455 | 691517 | | CUP, Flywheel<br>-Used After Code Date 93072500 |
| 455 | 805153 | | CUP, Flywheel<br>-Used Before Code Date 93072600 |
| 456 | 691529 | | PLATE, Pawl Friction |
| 456A | 224228 | | PLATE, Pawl Friction |
| 459 | 808166 | | PAWL, Ratchet |
| 459A | 492431 | | PAWL, Ratchet |
| 493B | 691503 | | BRACKET, Mounting |
| 493C | 845729 | | BRACKET, Mounting |
| 515 | 691528 | | SPRING, Pawl |
| 563 | 691982 | | SCREW<br>-(Debris Screen Guard) |
| 563A | 841735 | | SCREW<br>-(Debris Screen Guard) |
| 597 | 690876 | | SCREW<br>-(Pawl Friction Plate) |
| 597A | 94463 | | SCREW<br>-(Pawl Friction Plate) |
| 608 | 692102 | | STARTER, Rewind<br>-Used After Code Date 93072500 |
| 608A | 808152 | | STARTER, Rewind<br>-Used Before Code Date 93072600 |
| 689A | 262564 | | SPRING, Friction |
| 773 | 690875 | | RETAINER |
| 949 | 690475 | | GUARD, Debris Screen |
| 949A | 808226 | | GUARD, Debris Screen |
| 949B | 845728 | | GUARD, Debris Screen |

Not For Reproduction

Copyright © Briggs & Stratton. All Rights reserved

Mfg. No: 303447-0474-01

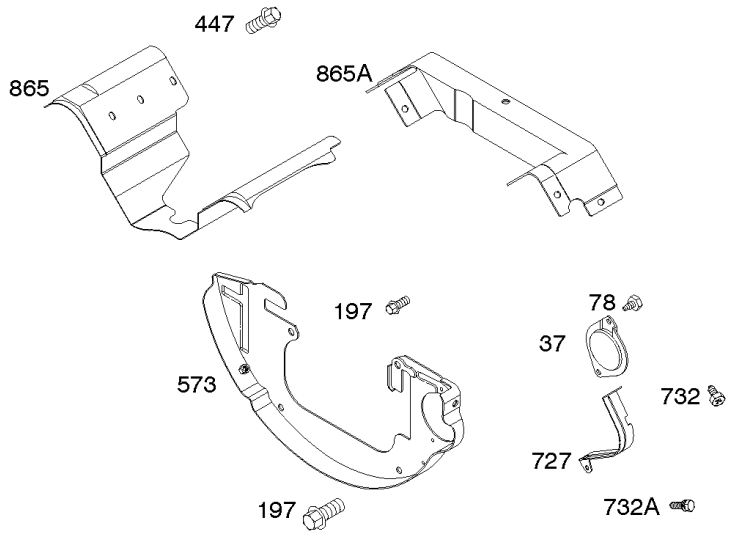


Not For Reproduction

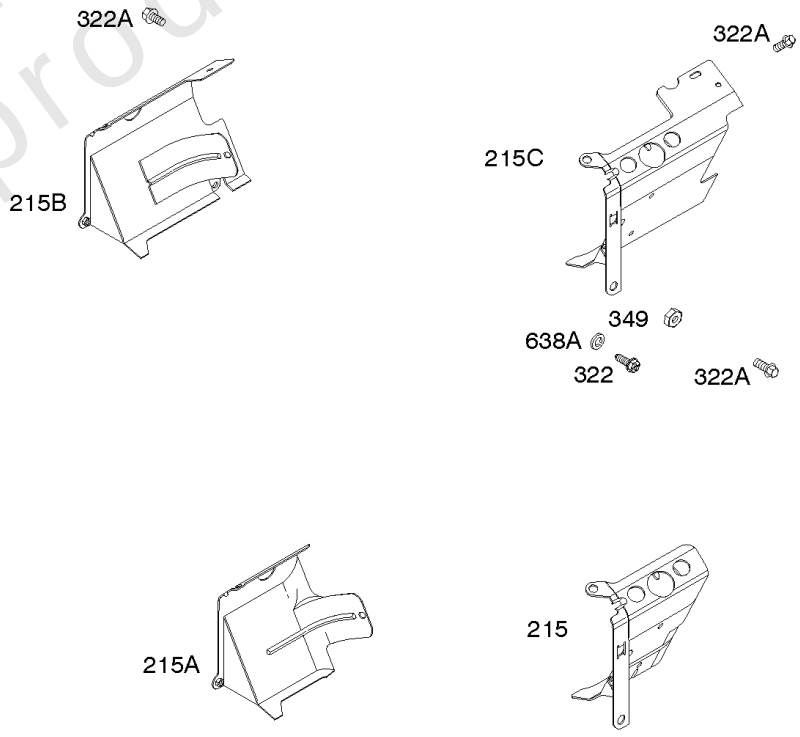


Copyright © Briggs & Stratton. All Rights reserved

## *Shrouds, Air Guides*

| REF NO | PART NO | QTY | DESCRIPTION |
|---|---|---|---|
| 37 | 841309 | | GUARD, Flywheel<br>-(Black) |
| 78 | 690688 | | SCREW<br>-(Flywheel Guard) |
| 197 | 807163 | | SCREW<br>-(Back Plate) |
| 215 | 807656 | | COVER, Cylinder Head<br>-(Cylinder 1)(Black)<br>-Used Before Code Date 93072300 |
| 215 | 841183 | | GUIDE, Air<br>-(Cylinder 1)(Black)<br>-Used After Code Date 93072200 |
| 215C | 841317 | | GUIDE, Air<br>-(Cylinder 1) |
| 322 | 841233 | | SCREW<br>-(Cylinder Head Cover) |
| 322A | 692067 | | SCREW<br>-(Cylinder Head Cover) |
| 349 | 690238 | | NUT<br>-(Cylinder Head Cover) |
| 447 | 841233 | | SCREW<br>-(Air Guide Cover) |
| 573 | 841310 | | PLATE, Back<br>-(Black) |
| 638A | 690706 | | WASHER<br>-(Cylinder Head Cover) (Head Cover)(Spring) |
| 727 | 841313 | | COVER, Starter Drive<br>-(Black) |
| 732 | 690688 | | SCREW<br>-(Starter Drive Cover) |
| 732A | 841233 | | SCREW<br>-(Starter Drive Cover)<br>-Used After Code Date 03120900 |
| 865 | 843768 | | COVER, Air Guide |

Not For Reproduction

# Model 29, 30, 35 & 38 Engine Accessories Catalog

Not For Reproduction

Copyright © Briggs & Stratton. All Rights reserved

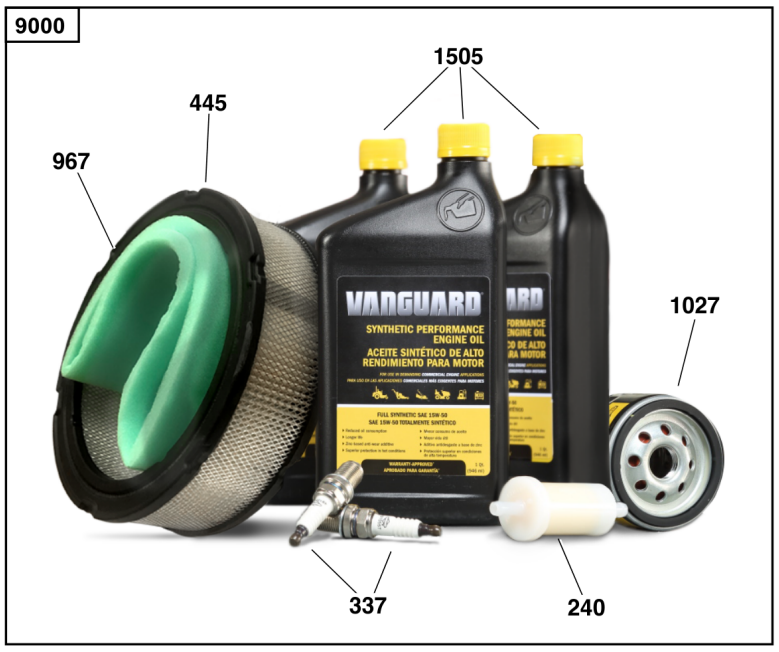


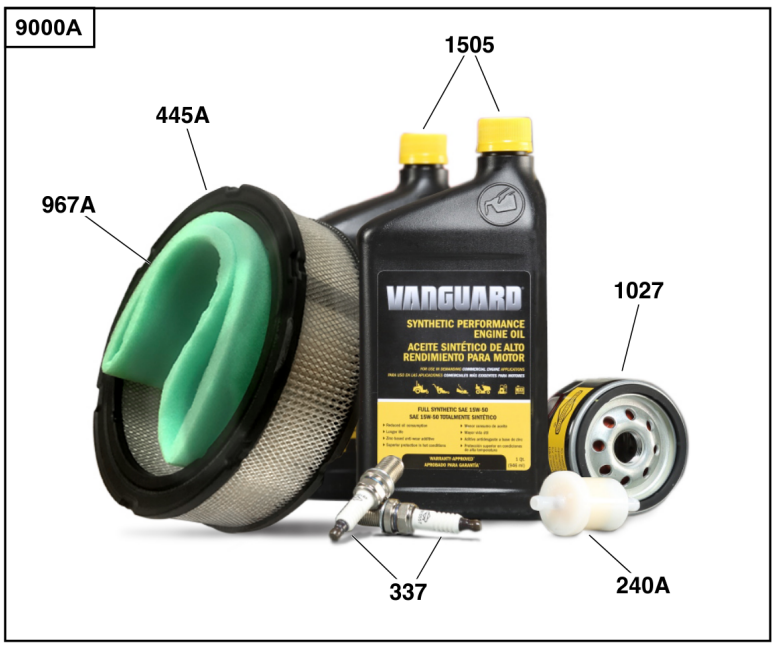

Not For Reproduction

## *Maintenance Kits*

| REF NO | PART NO | QTY | DESCRIPTION |
|---|---|---|---|
| 9000 | 84004936 | | KIT, Maintenance<br>-(Non-Oil Guard™ Engines) (20 - 23 HP) |
| 9000A | 84004937 | | KIT, Maintenance<br>-(Non-Oil Guard™ Engines) (12.5 - 18 HP) |
| 9000B | 84002315 | | KIT, Maintenance<br>-(Non-Oil Guard™ Engines) |
| 240 | 845125 | 1 | FILTER, Fuel |
| 240A | 84001895 | 1 | FILTER, Fuel |
| 337 | 491055S | 2 | PLUG, Spark |
| 337 | 84007216 | 2 | PLUG, Spark<br>-(China Only) |
| 445 | 692519 | 1 | FILTER, A/C Cartridge<br>-"Professional / PXi" & "Commercial / CXi". |
| 445A | 394018S | 1 | FILTER, A/C Cartridge<br>-"Professional / PXi" & "Commercial / CXi". |
| 445B | 841497 | 1 | FILTER, A/C Cartridge<br>-"Professional / PXi" & "Commercial / CXi". |
| 967 | 692520 | 1 | FILTER, Pre Cleaner |
| 967A | 272490S | 1 | FILTER, Pre Cleaner |
| 1027 | 842921 | 1 | FILTER, Oil<br>-(Vanguard®) |
| 1505 | 100169 | | OIL-1QT VANGUARD (CASE)<br>-(1 qt. Bottle) |

Not For Reproduction

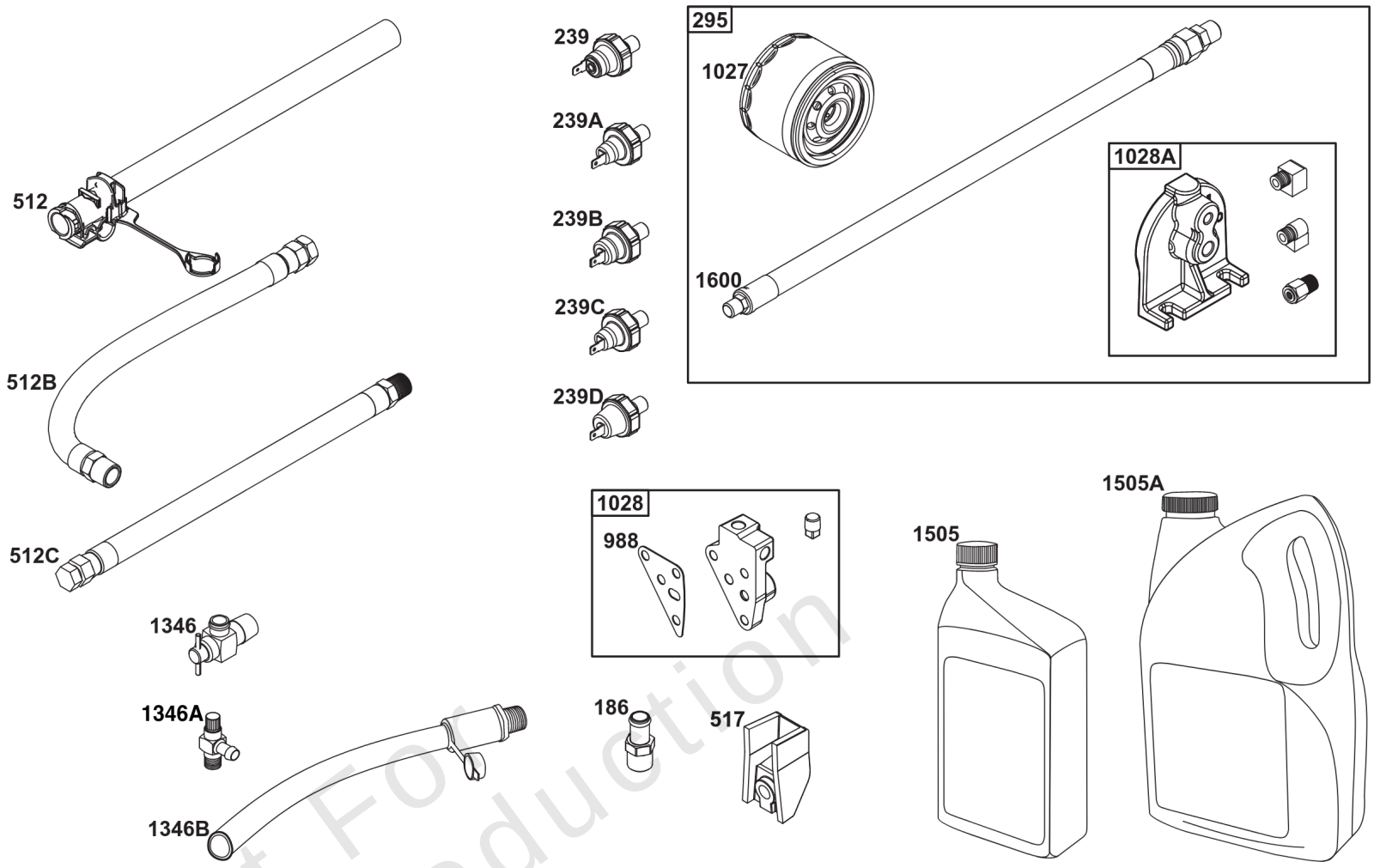


Not For Reproduction

## *Lubrication*

| REF NO | PART NO | QTY | DESCRIPTION |
|---|---|---|---|
| 186 | 796532 | 1 | CONNECTOR, Hose<br>-(Threaded Engine Block Connector for EZ-Oil Drain Hose)(Order hose separate) |
| 239 | 690233 | 1 | SWITCH, Oil Pressure<br>-(2-4 PSI Normally-Closed Switch) |
| 239A | 491657S | 1 | SWITCH, Oil Pressure<br>-(3-5 PSI Normally-Closed Switch) |
| 239B | 841281 | 1 | SWITCH, Oil Pressure<br>-(7-10 PSI Normally-Closed Switch) |
| 239C | 694115 | 1 | SWITCH, Oil Pressure<br>-(9-13 PSI Normally-Closed Switch) |
| 239D | 697049 | 1 | SWITCH, Oil Pressure<br>-(3-6 PSI Normally-Open Switch) |
| 295 | 492061 | 1 | ADAPTER, Remote Oil Filter<br>-(Remote oil filter head with 18" (48 cm) hoses) |
| 295 | 492062 | 1 | ADAPTER, Remote Oil Filter<br>-(Remote oil filter head with 30" (76 cm) hoses) |
| 512 | 594200 | 1 | HOSE, Oil Drain<br>-(EZ-Oil Drain Hose, 10.5")(Order threaded engine block connector separate) |
| 512 | 593635 | 1 | HOSE, Oil Drain<br>-(EZ-Oil Drain Hose, 13.75")(Order threaded engine block connector separate) |
| 512B | 1723165SM | 1 | HOSE, Oil Drain, 10-1/2" Long, 3/8-18 Fittings<br>-(10.5") |
| 512C | 5048681SM | 1 | HOSE, OIL DRAIN<br>-(12.5") |
| 517 | 593633 | 1 | RETAINER, Oil Drain |
| 988 | 692063 | 1 | GASKET, Oil Adapter |
| 1027 | 492932S | 1 | FILTER, Oil |
| 1028 | 492687 | 1 | ADAPTER, Oil Filter<br>-(Adapter Kit for mounting remote oil filter) |
| 1028A | 495244 | 1 | ADAPTER-OIL FILTER<br>-(Remote oil filter mounting head with fittings) |
| 1346 | 844802 | 1 | VALVE, Oil Drain Shut Off |
| 1346A | 492031 | 1 | VALVE, Oil Drain Shut Off |
| 1346B | 5401WEB | 1 | VALVE, Oil Drain Shut Off<br>-(1/4 Turn Oil Drain Valve with Hose) |
| 1505 | 100169 | | OIL-1QT VANGUARD (CASE)<br>-(1 qt. Bottle) |
| 1505A | 100170 | | OIL-5QT VANGUARD (CASE)<br>-(5 qt. Bottle) |
| 1600 | 494724 | 2 | HOSE, Remote Oil Filter<br>-(Hoses only (2) 18" (48 cm)) |
| 1600 | 494725 | 2 | HOSE, Remote Oil Filter<br>-(Hoses only (2) 30" (76 cm)) |

Not For Reproduction

Copyright © Briggs & Stratton. All Rights reserved

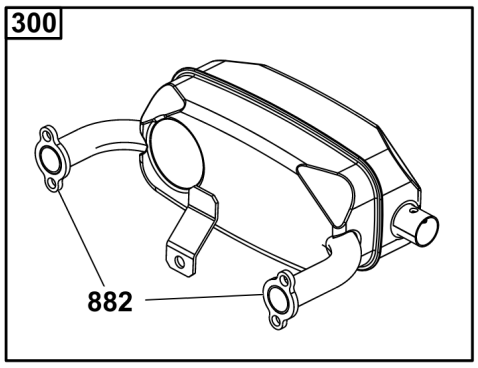


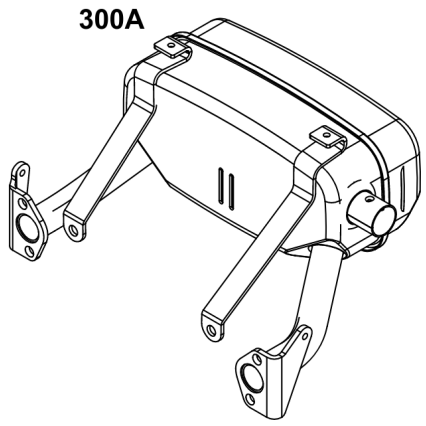


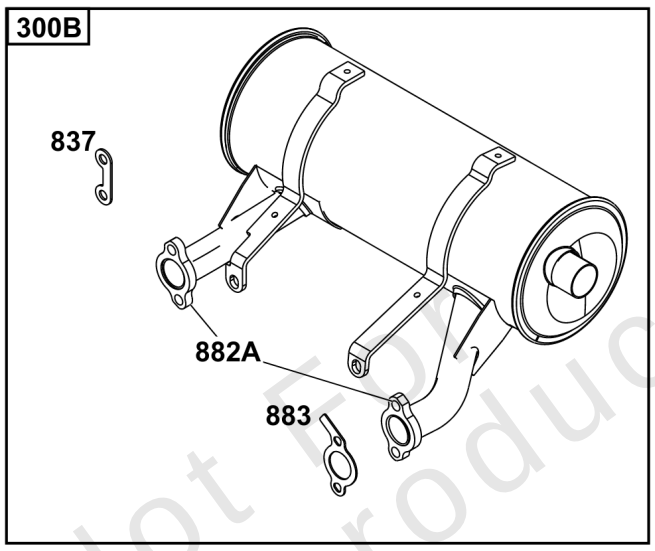


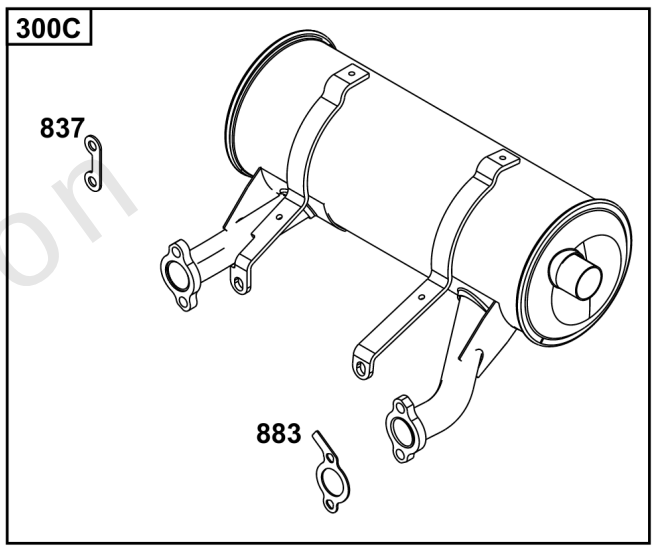


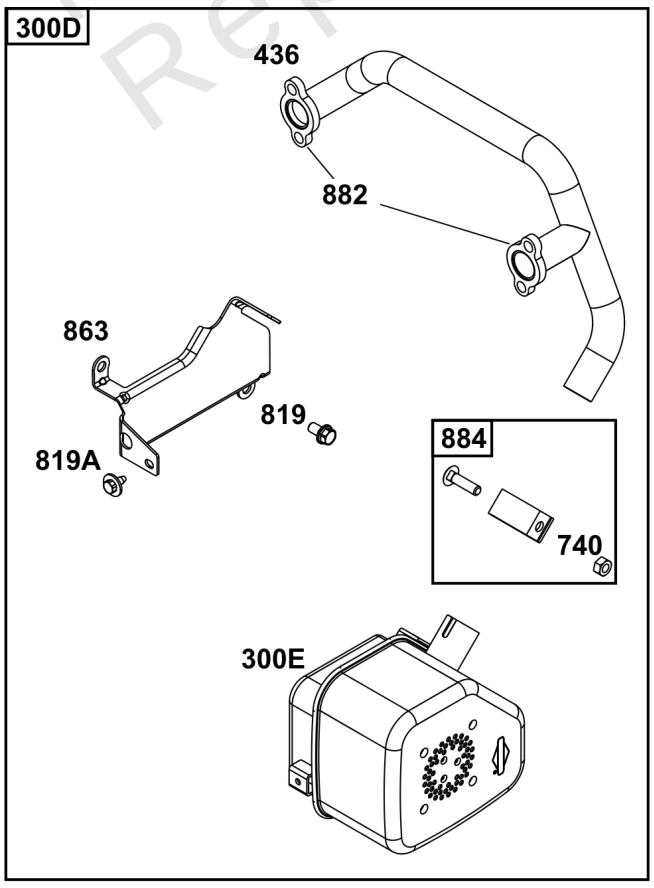


Not For Reproduction

## *Starter Motor Side Outlet Mufflers*

| REF NO | PART NO | QTY | DESCRIPTION |
|---|---|---|---|
| 300 | 690931 | 1 | MUFFLER<br>-(Super Lo-Tone) (Horizontal: 3054, 3564) |
| 300A | 690906 | 1 | MUFFLER<br>-(Super Lo-Tone) (Horizontal: 3054, 3564) |
| 300B | 808705 | 1 | MUFFLER<br>-(5" Round) (Horizontal: 3854, 3864) |
| 300C | 845873 | 1 | MUFFLER<br>-(5" Round, Stainless Steel) (Horizontal: 3854, 3864) |
| 300D | 995005 | 1 | MUFFLER ASSY<br>-(Lo-Tone) (Horizontal: 3054, 3564) |
| 300E | 692099 | 1 | MUFFLER<br>-(Lo Mount) |
| 436 | 691499 | 1 | MANIFOLD, Exhaust<br>-(Cylinder 1) (Side Outlet) |
| 740 | 793859 | 1 | NUT |
| 819 | 692056 | 2 | SCREW<br>-(Muffler Bracket) (M8x1.25) |
| 819A | 691514 | 2 | SCREW<br>-(Muffler Bracket) (M6 X 1.0) |
| 837 | 808085 | 2 | SPACER, Muffler<br>-(Includes 2) |
| 863 | 690756 | 1 | BRACKET, Muffler<br>-(Cylinder 1) (Side Outlet) |
| 882 | 692074 | 2 | FLANGE, Exhaust |
| 882A | 806965 | 2 | FLANGE, Exhaust |
| 883 | 806425 | 2 | GASKET, Exhaust |
| 884 | 690898 | 1 | CLAMP, Muffler |

Not For Reproduction

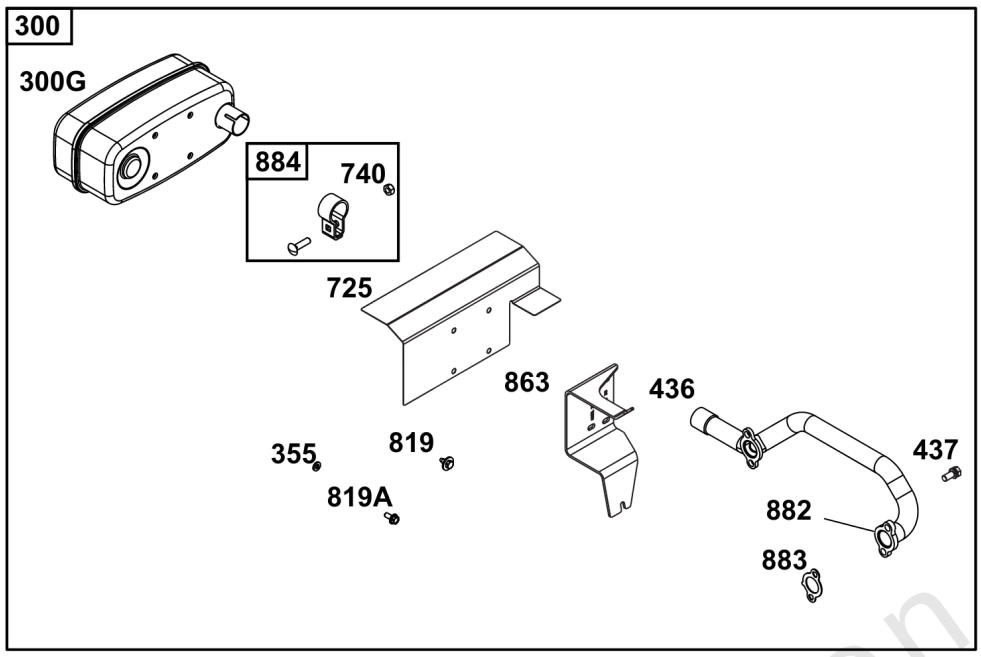


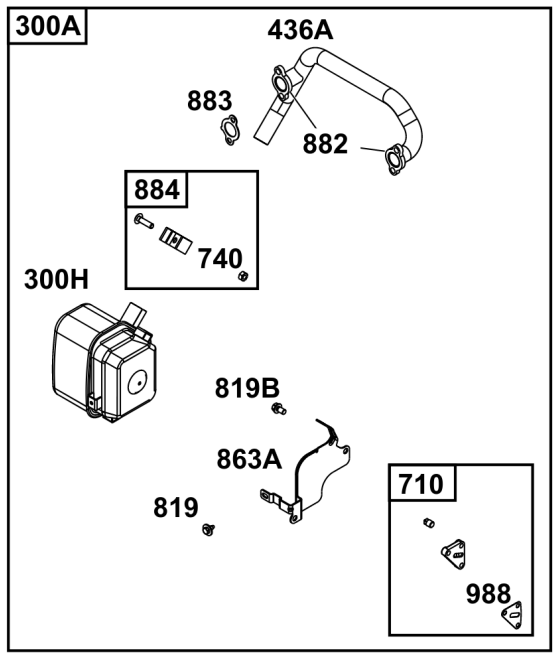


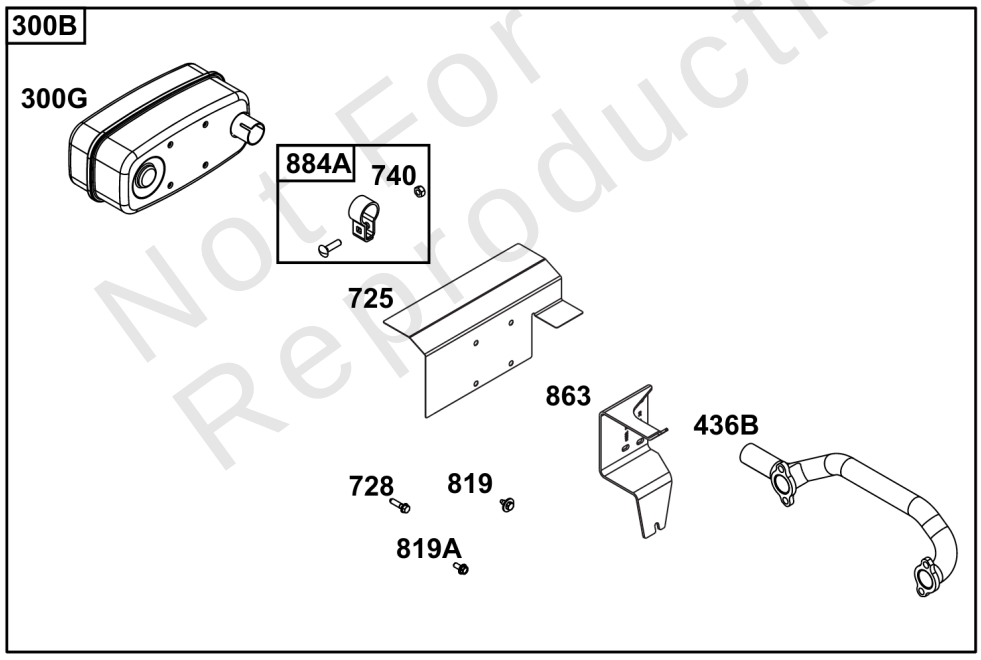


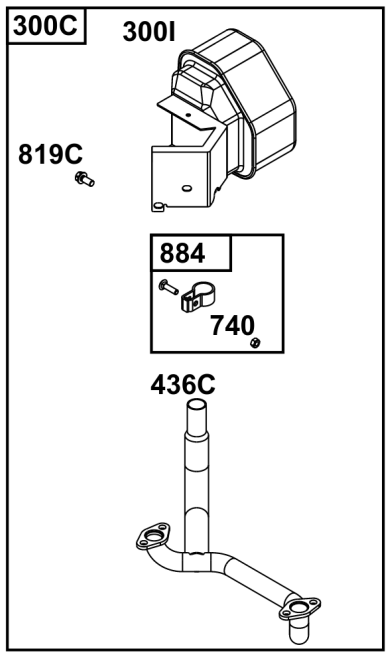


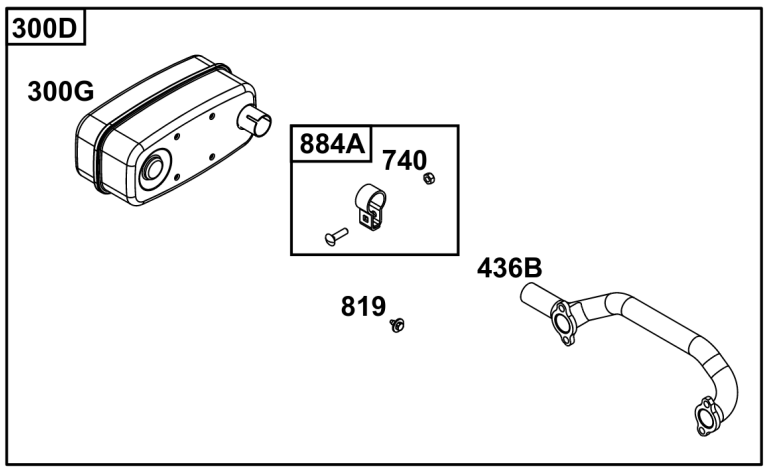


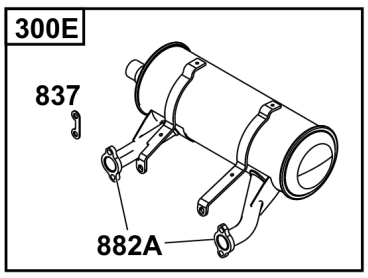


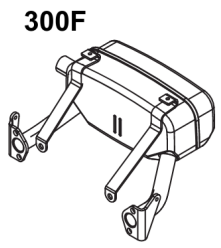


Not For Reproduction

## *Oil Filter Side Outlet Mufflers*

| REF NO | PART NO | QTY | DESCRIPTION |
|---|---|---|---|
| 300 | 995002 | 1 | HIGH MNT SPR LO-TONE OIL FLTR SIDE<br>-(Super Lo-Tone) (Horizontal: 3054, 3564) (Vertical: 3567) |
| 300A | 995000 | 1 | OIL FILTER SIDE LO-MT<br>-(Lo-Tone) (Horizontal: 3054, 3564) (Requires 808033 Oil Filter Adaptor) |
| 300B | 995004 | 1 | HI MNT SPR LO-TONE OIL FLT SIDE<br>-(Super Lo-Tone) (Horizontal: 3854, 3864) (Vertical: 3867) |
| 300C | 995009 | 1 | COMMERCIAL MOWERS KIT<br>-(For Wide Area Walker) (Vertical: 3567) |
| 300D | 995010 | 1 | COMMERCIAL MOWERS KIT<br>-(Vertical: 3867) |
| 300E | 808896 | 1 | MUFFLER |
| 300F | 691562 | 1 | MUFFLER<br>-(Super Lo-Tone) (Horizontal: 3054, 3564) |
| 300G | 498984S | 1 | MUFFLER<br>-(Super Lo Tone) |
| 300H | 807948 | 1 | MUFFLER<br>-(Lo Mount) |
| 300I | 807953 | 1 | MUFFLER |
| 355 | 842122 | 2 | WASHER<br>-(Muffler Bracket) |
| 436 | 805609 | 1 | MANIFOLD, Exhaust<br>-(Cylinder 2) (Side Outlet) |
| 436A | 692061 | 1 | MANIFOLD, Exhaust<br>-(Cylinder 2) (Side Outlet) |
| 436B | 808916 | 1 | MANIFOLD, Exhaust<br>-(Cylinder 2) (Side Outlet) |
| 436C | 805778 | 1 | MANIFOLD, Exhaust<br>-(Wide Area Walker) |
| 437 | 691902 | 4 | SCREW<br>-(Exhaust Manifold) |
| 710 | 807689 | 1 | COVER, Oil Filter |
| 725 | 806102 | 1 | SHIELD, Heat |
| 728 | 690297 | 2 | SCREW |
| 740 | 793859 | 1 | NUT |
| 819 | 691514 | 2 | SCREW<br>-(Muffler Bracket) (M6 X 1.0) |
| 819A | 807084 | 2 | SCREW<br>-(Muffler Bracket) |
| 819B | 692056 | 2 | SCREW<br>-(Muffler Bracket) (M8x1.25) |
| 819C | 692062 | 2 | SCREW<br>-(Muffler Bracket) |
| 837 | 808085 | 2 | SPACER, Muffler<br>-(Includes 2) |
| 863 | 806759 | 1 | BRACKET, Muffler |
| 863A | 691513 | 1 | BRACKET, Muffler |
| 882 | 692074 | 2 | FLANGE, Exhaust<br>-(3054 & 3564) |
| 882A | 806965 | 2 | FLANGE, Exhaust |
| 883 | 691613 | 2 | GASKET, Exhaust |
| 884 | 690898 | 1 | CLAMP, Muffler |
| 884A | 691956 | 1 | CLAMP, Muffler |
| 988 | 690687 | 1 | GASKET, Oil Adapter |

Not For Reproduction

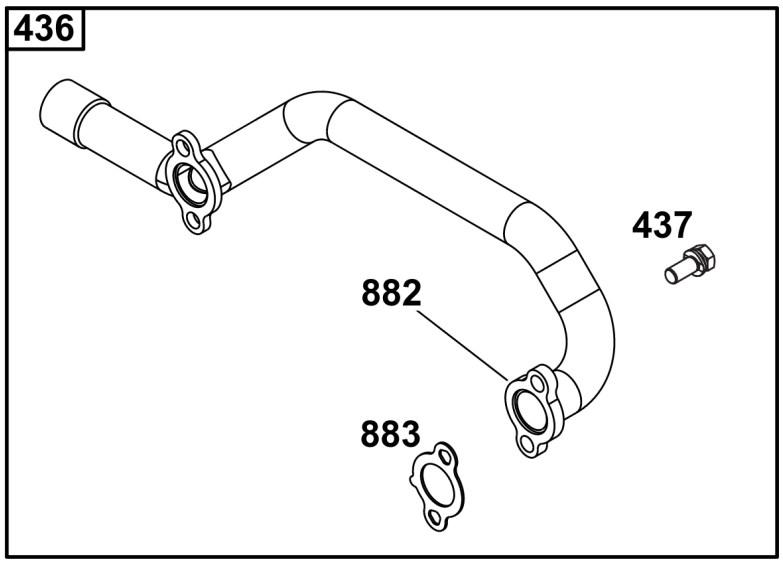


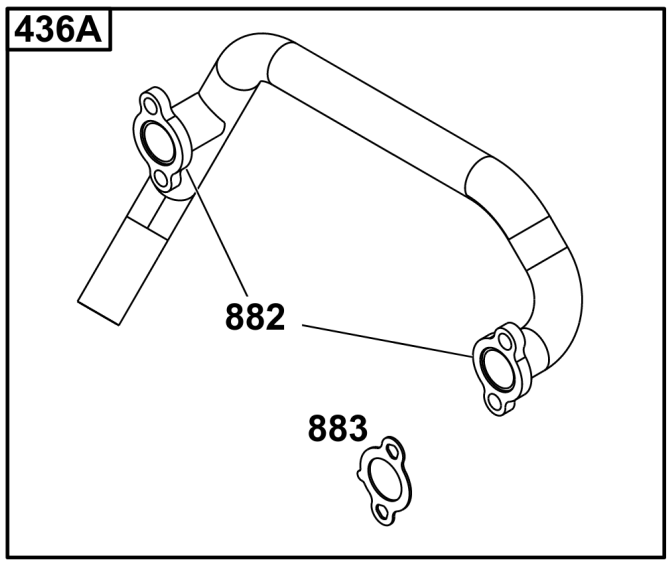


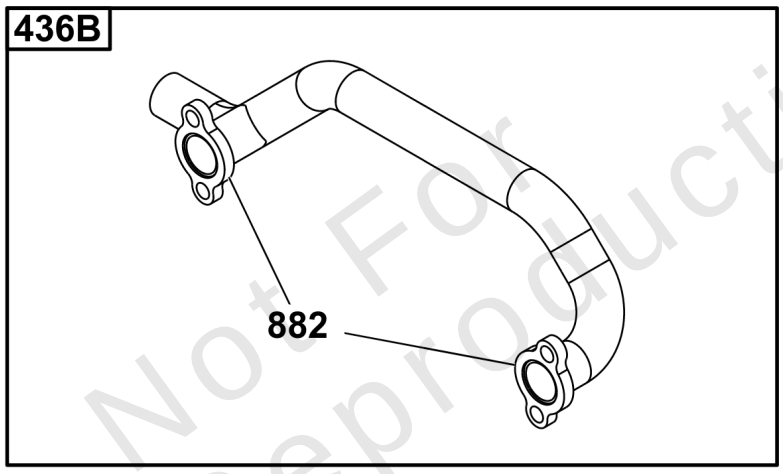


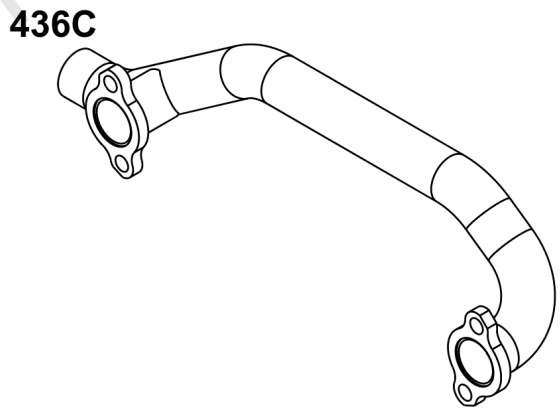


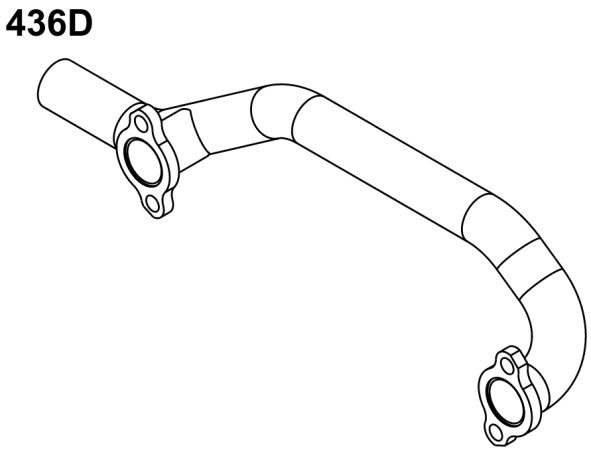


Not For Reproduction

## *Oil Filter Side Outlet Manifolds*

| REF NO | PART NO | QTY | DESCRIPTION |
|---|---|---|---|
| 436 | 805609 | 1 | MANIFOLD, Exhaust<br>-(Vertical: 3567) |
| 436A | 692061 | 1 | MANIFOLD, Exhaust<br>-(Horizontal: 3054, 3564) |
| 436B | 691501 | 1 | MANIFOLD, Exhaust<br>-(Horizontal: 3054, 3564) |
| 436C | 808908 | 1 | MANIFOLD, Exhaust<br>-(Horizontal: 3854, 3864) |
| 436D | 808916 | 1 | MANIFOLD, Exhaust<br>-(Horizontal: 3854, 3864) (Vertical: 3867) |
| 437 | 691902 | 4 | SCREW<br>-(Exhaust Manifold) |
| 882 | 692074 | 2 | FLANGE, Exhaust |
| 883 | 691613 | 2 | GASKET, Exhaust |

Not For Reproduction

Copyright © Briggs & Stratton. All Rights reserved

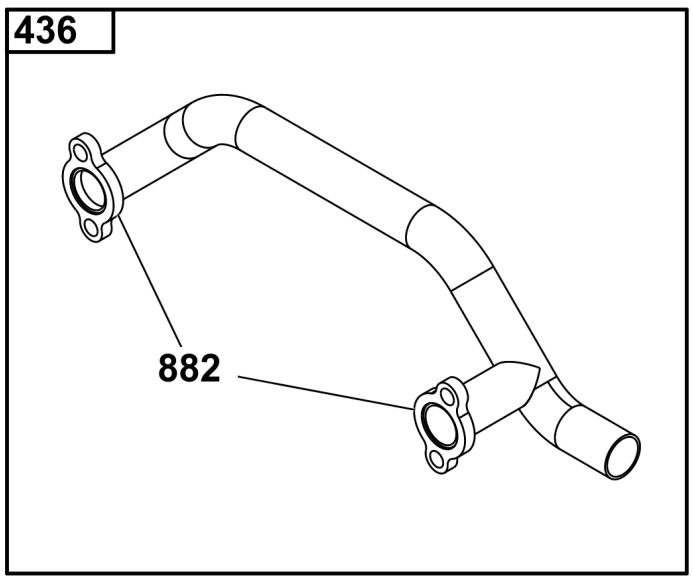


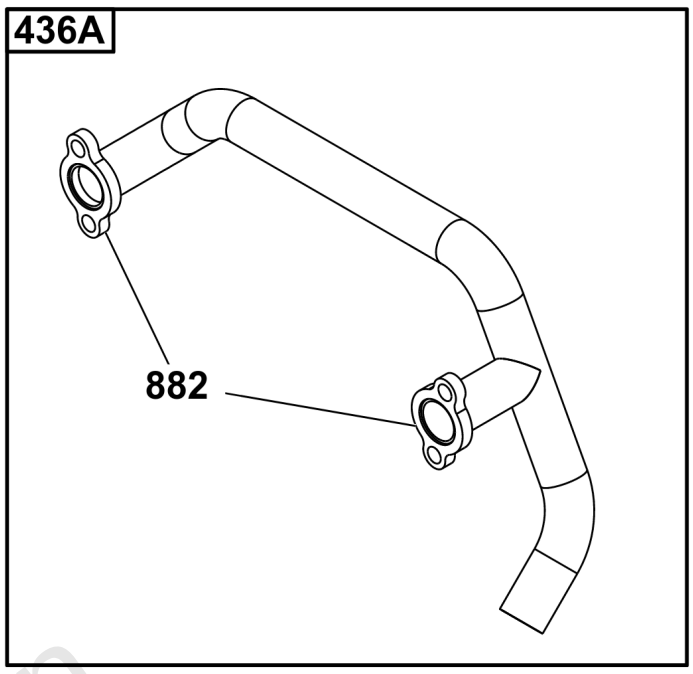


436B

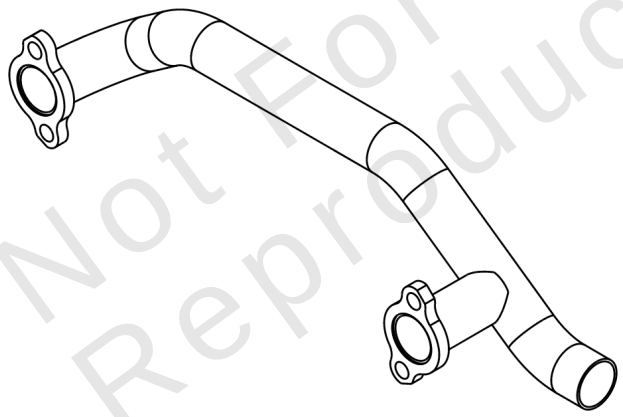

Not For Reproduction

## *Starter Motor Side Outlet Manifolds*

| REF NO | PART NO | QTY | DESCRIPTION |
|---|---|---|---|
| 436 | 691502 | 1 | MANIFOLD, Exhaust<br>-(Horizontal: 3054, 3564) |
| 436A | 691499 | 1 | MANIFOLD, Exhaust<br>-(Horizontal: 3054, 3564) |
| 436B | 808909 | 1 | MANIFOLD, Exhaust<br>-(Horizontal: 3854, 3864) (Vertical: 3867) |
| 882 | 692074 | 2 | FLANGE, Exhaust |

Not For Reproduction

Copyright © Briggs & Stratton. All Rights reserved

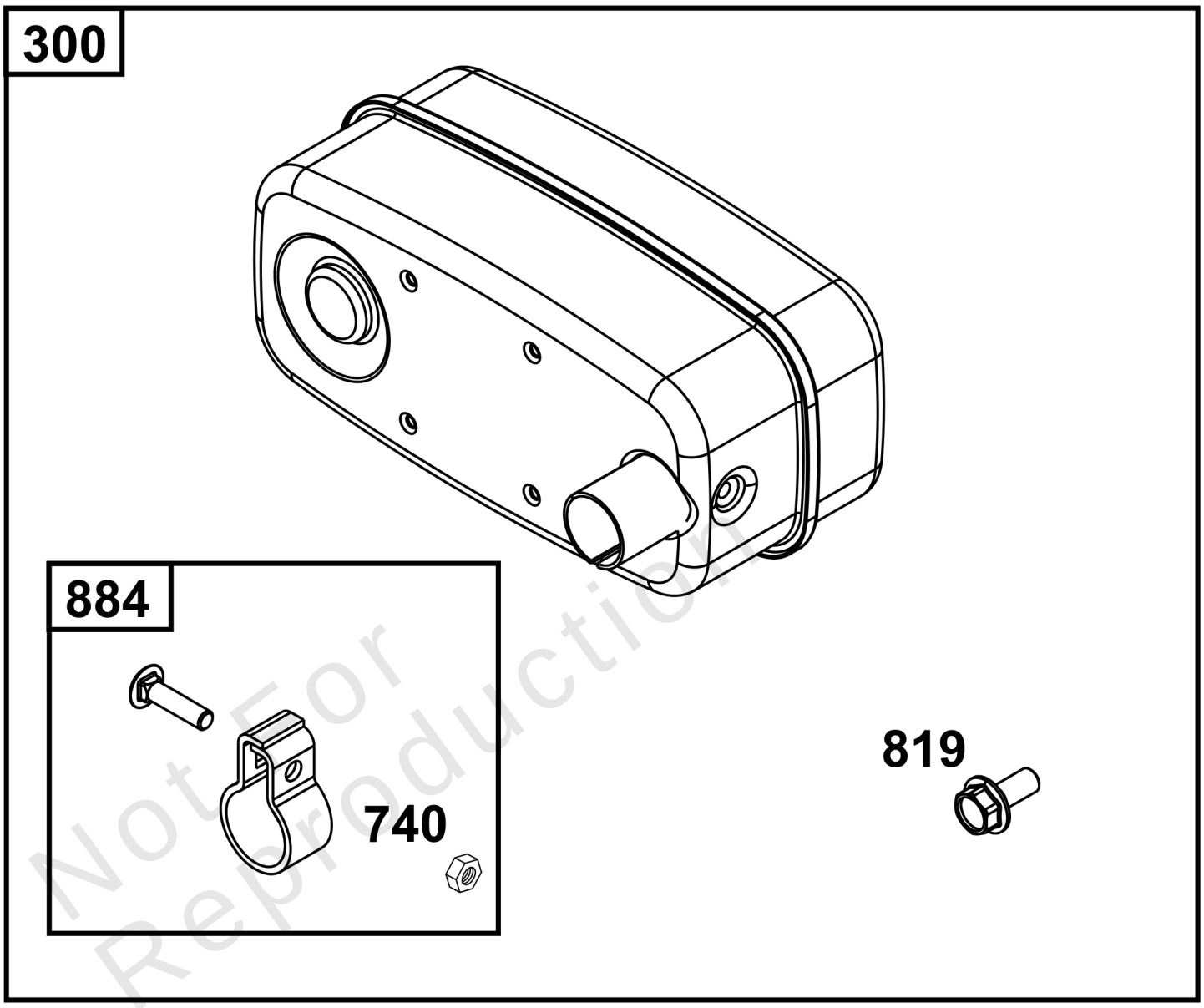


Not For Reproduction

## *Mufflers*

| REF NO | PART NO | QTY | DESCRIPTION |
|---|---|---|---|
| 300 | 995018 | 1 | MUFFLER<br>-(Inlet I.D. 1.14" (28.9mm)) |
| 740 | 793859 | 1 | NUT |
| 819 | 807084 | 4 | SCREW |
| 884 | 691956 | 1 | CLAMP, Muffler |

Not For Reproduction

Copyright © Briggs & Stratton. All Rights reserved

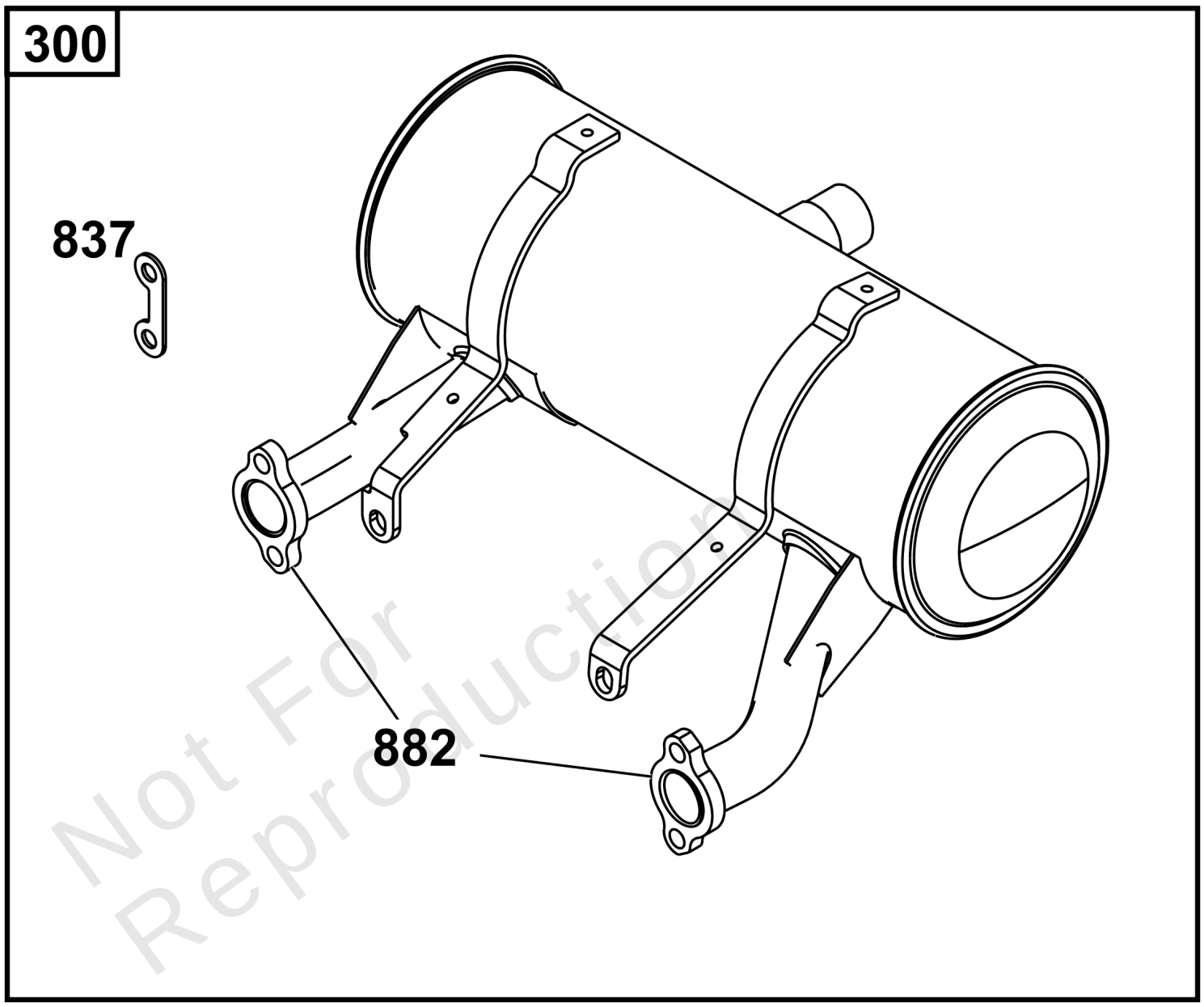


Not For Reproduction

Copyright © Briggs & Stratton. All Rights reserved

## *Center Outlet Mufflers*

| REF NO | PART NO | QTY | DESCRIPTION |
|---|---|---|---|
| 300 | 808911 | 1 | MUFFLER<br>-(5" Round) (Horizontal: 3854, 3864) |
| 837 | 808085 | 2 | SPACER, Muffler |
| 882 | 806965 | 2 | FLANGE, Exhaust |

Not For Reproduction

Copyright © Briggs & Stratton. All Rights reserved

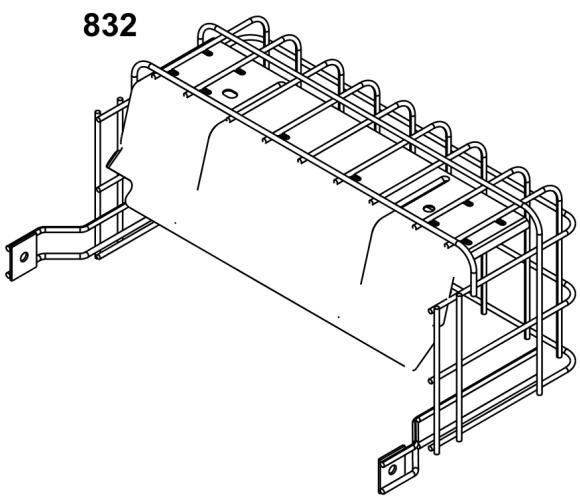


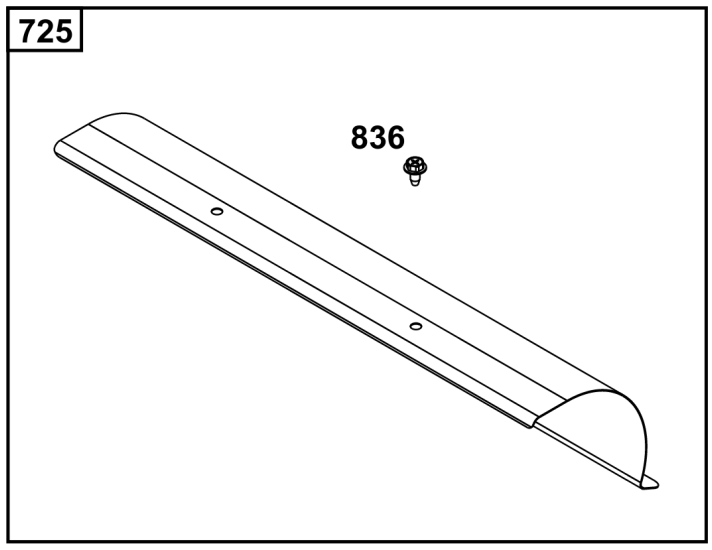


Not For Reproduction

## *Muffler Guards and Shields*

| REF NO | PART NO | QTY | DESCRIPTION |
|---|---|---|---|
| 725 | 846568 | 1 | SHIELD, Heat<br>-(For 5" Round Mufflers) (Horizontal: 3854, 3864) |
| 832 | 691571 | 1 | GUARD, Muffler<br>-(Assembly for 690906 & 691562) (Horizontal: 3054, 3564) |
| 836 | 692067 | 4 | SCREW |

Not For Reproduction

Copyright © Briggs & Stratton. All Rights reserved

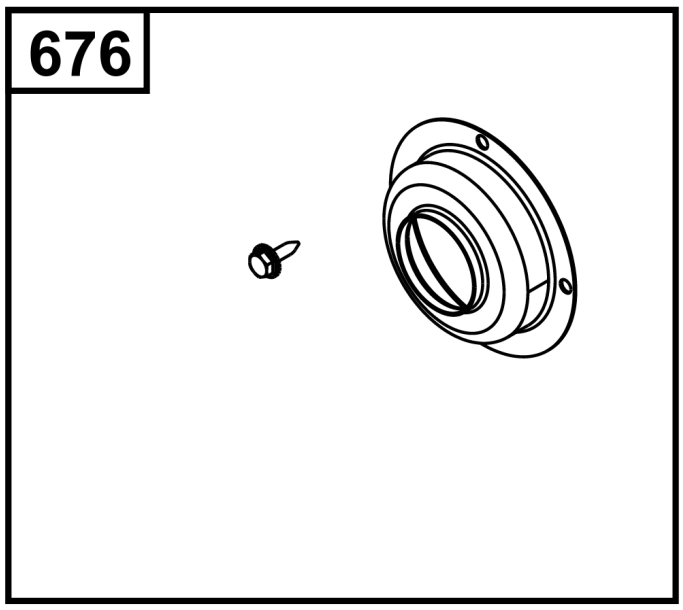


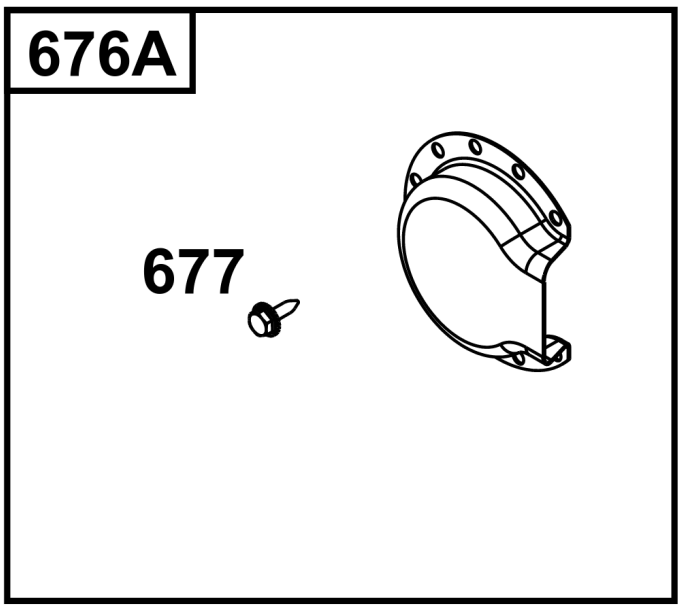


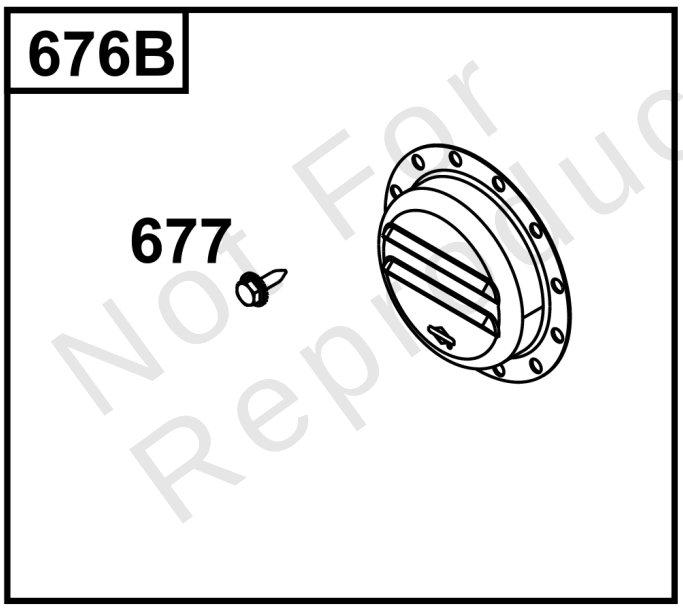


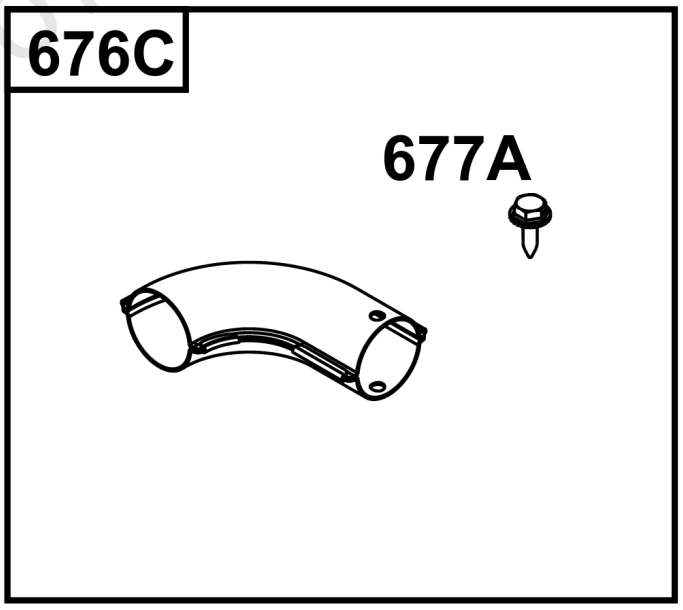


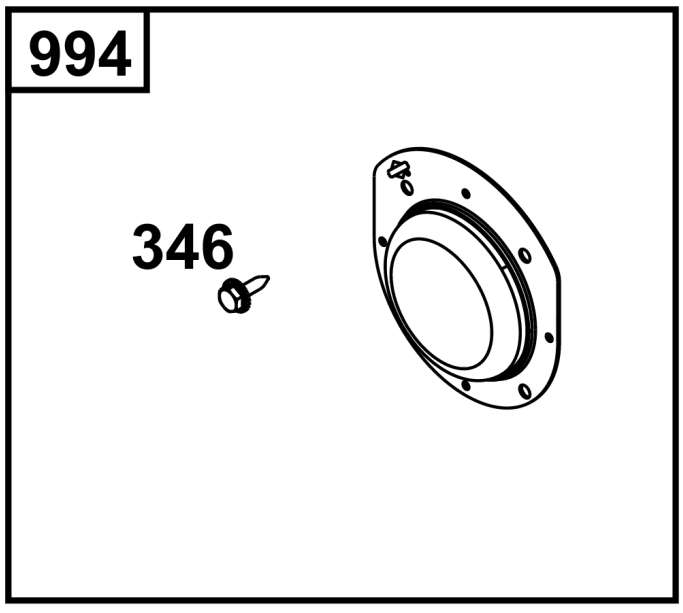


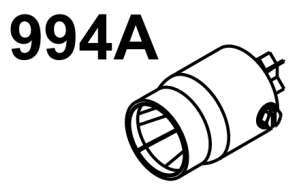


Not For Reproduction

## *Spark Arrestors and Deflectors*

| REF NO | PART NO | QTY | DESCRIPTION |
|---|---|---|---|
| 346 | 794845 | 4 | SCREW<br>-(Spark Arrestor) |
| 676 | 396903 | 1 | DEFLECTOR, Muffler<br>-(Direct Outlet) (Face Mounting with 4 Screws) |
| 676A | 795036 | 1 | DEFLECTOR, Muffler<br>-(Deflector 90 Degree) (Face Mounting with 4 Screws) |
| 676B | 795038 | 1 | DEFLECTOR, Muffler<br>-(Deflector Louvered) (Face Mounting with 4 Screws) |
| 676C | 495518 | 1 | DEFLECTOR, Muffler<br>-(Elbow for Muffler Assembly) (For Exit Pipe O.D. of 1.10" (28mm)) |
| 677 | 794845 | 4 | SCREW<br>-(Muffler Deflector) |
| 677A | 810079 | 1 | SCREW<br>-(Muffler Deflector) |
| 994 | 794945 | 1 | ARRESTOR, Spark<br>-(Spark Arrestor) (Face Mounting with 4 Screws) |
| 994A | 594562 | 1 | ARRESTOR, Spark<br>-(Spark Arrester) (For Exit Pipe O.D. of 1.10" (28mm)) |

Not For Reproduction

Copyright © Briggs & Stratton. All Rights reserved

**613**

**1177**

**296**

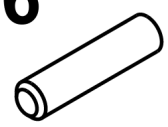

**883**

**883A**

**882**

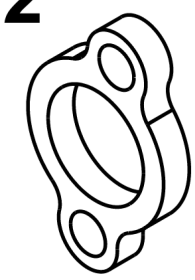

Not For Reproduction

**882A**

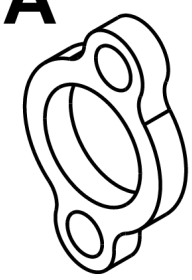

## *Muffler Mounting Hardware*

| REF NO | PART NO | QTY | DESCRIPTION |
|---|---|---|---|
| 296 | 841185 | 4 | STUD<br>-(Mounting Mufflers) |
| 613 | 691902 | 4 | SCREW<br>-(Mounting Mufflers) |
| 882 | 692074 | 2 | FLANGE, Exhaust<br>-(3054 & 3564) |
| 882A | 806965 | 2 | FLANGE, Exhaust<br>-(3854 & 3864) |
| 883 | 806425 | 2 | GASKET, Exhaust<br>-(Horizontal: 3854, 3864) (Vertical: 3567) |
| 883A | 691613 | 2 | GASKET, Exhaust<br>-(Horizontal: 3054, 3564) (Vertical: 3567) |
| 1177 | 842067 | 4 | NUT<br>-(Required if Using 841185) |

Not For Reproduction

Copyright © Briggs & Stratton. All Rights reserved

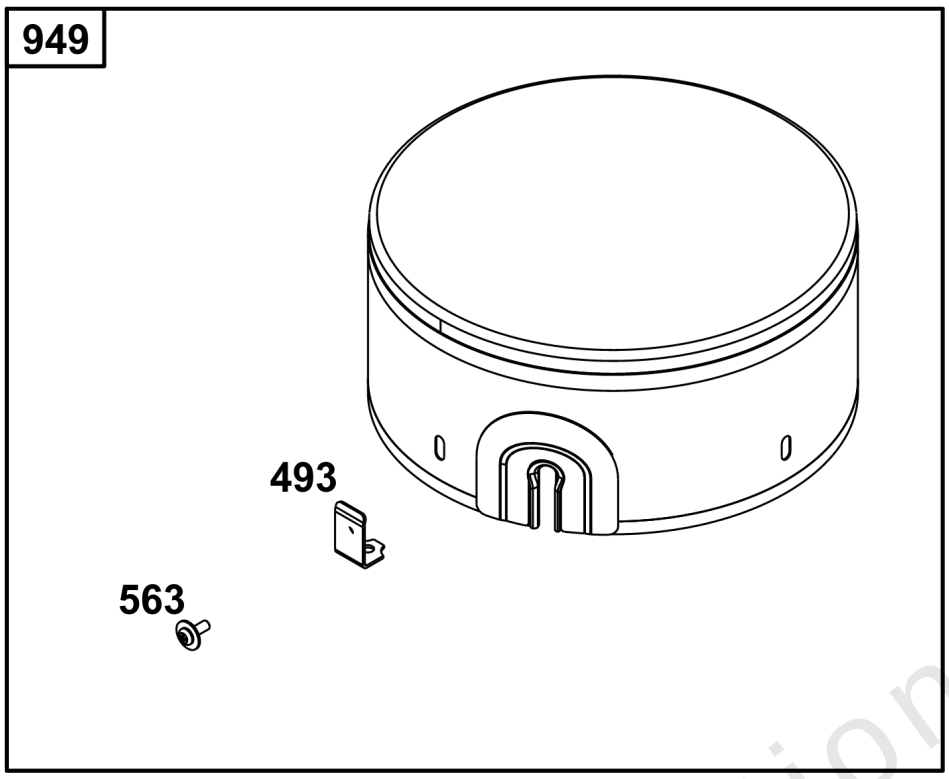


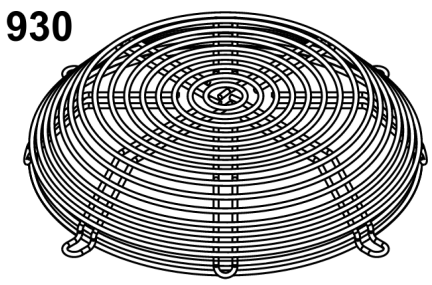


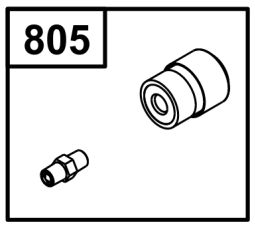


Not For Reproduction

## *Flywheel and Air Intake Guards*

| REF NO | PART NO | QTY | DESCRIPTION |
|---|---|---|---|
| 493 | 845729 | 4 | BRACKET, Mounting |
| 563 | 841441 | 4 | SCREW |
| 805 | 843024 | 1 | MINDER, Filter<br>-(For Engines with Cyclonic Air Filter) |
| 930 | 846284 | 1 | GUARD, Flywheel Fan |
| 949 | 845728 | 1 | GUARD, Debris Screen<br>-(Vertical: 3867) |

Not For Reproduction

Copyright © Briggs & Stratton. All Rights reserved

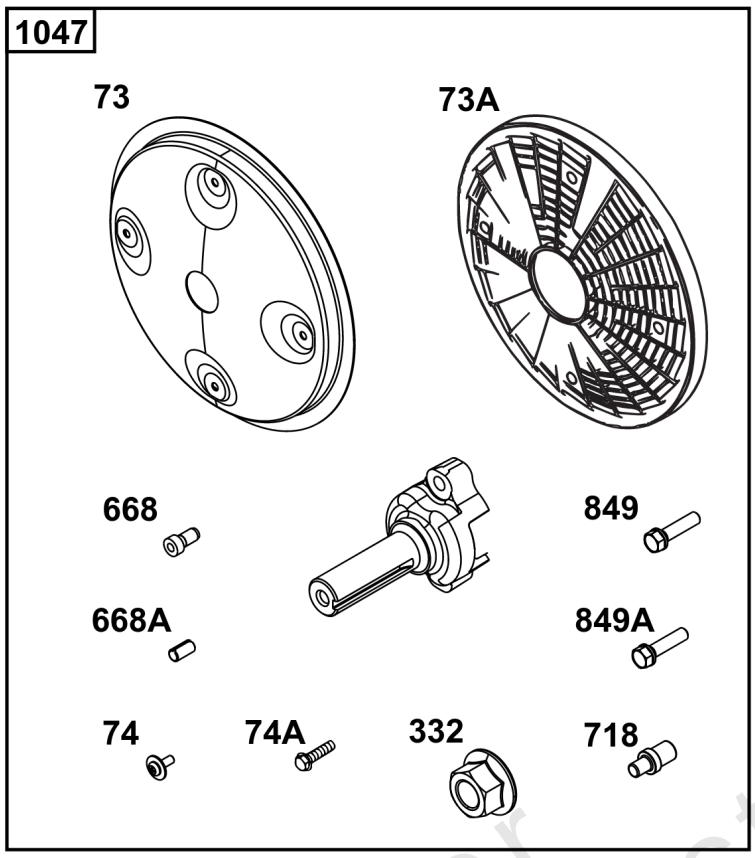


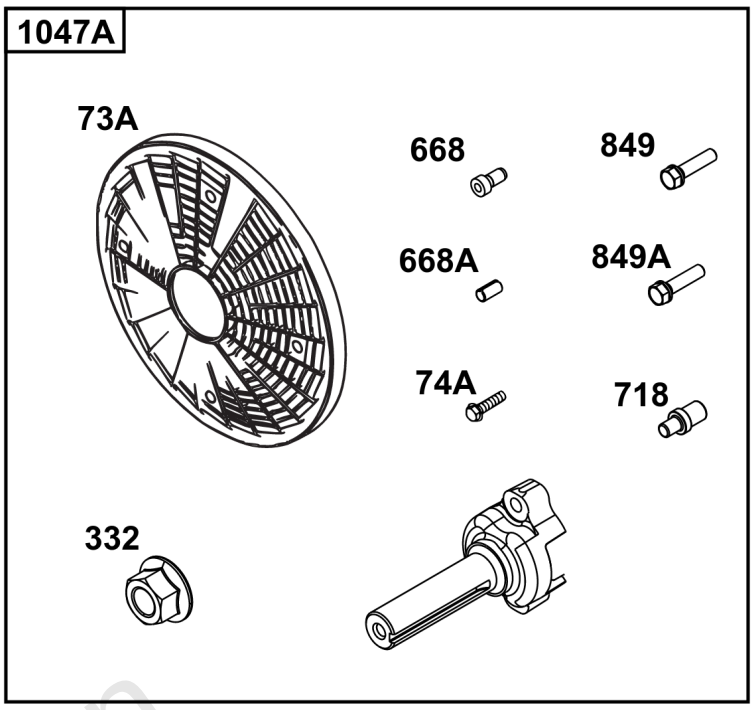


Not For Reproduction

## *PTO*

| REF NO | PART NO | QTY | DESCRIPTION |
|---|---|---|---|
| 73 | 841582 | 1 | SCREEN, Rotating |
| 73A | 494439 | 1 | SCREEN, Rotating |
| 74 | 841441 | 4 | SCREW<br>-(Rotating Screen) |
| 74A | 691647 | 4 | SCREW<br>-(Rotating Screen) |
| 332 | 690887 | 1 | NUT<br>-(Flywheel) |
| 668 | 691500 | 4 | SPACER<br>-(Rotating Screen) |
| 668A | 691215 | 4 | SPACER<br>-(Rotating Screen) |
| 718 | 841581 | 1 | PIN, Locating<br>-(32MM) |
| 849 | 691088 | 2 | SCREW<br>-(Stub Shaft) |
| 849A | 846236 | 2 | SCREW<br>-(Stub Shaft) |
| 1047 | 841580 | 1 | SHAFT, Stub<br>-(1" Diameter) (4.75" Length) |
| 1047A | 842655 | 1 | SHAFT, Stub<br>-(1" Diameter) (5.43" Length) |

Not For Reproduction

Copyright © Briggs & Stratton. All Rights reserved

**789**

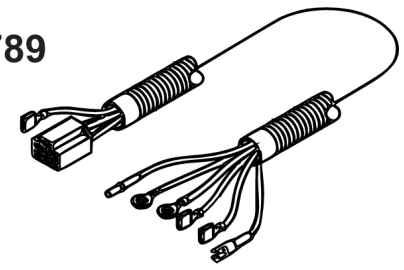

**789A**

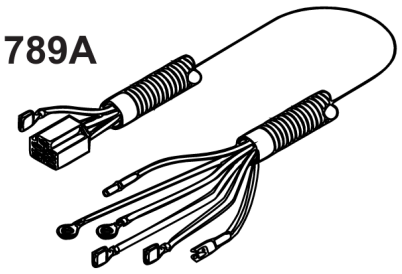

**789B**

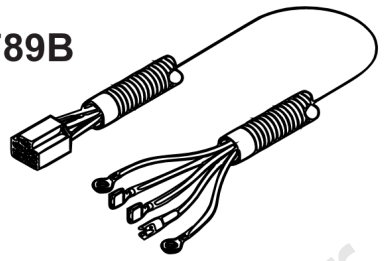

**789C**

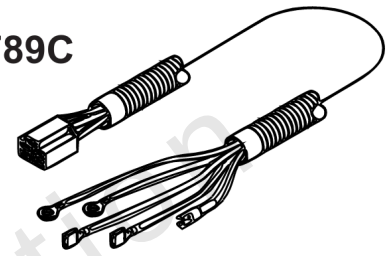

**415**

Not For Reproduction

**578**

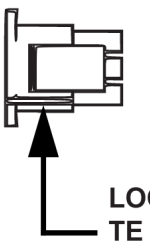

**LOOSE CONNECTOR:**
**TE # 1-480704-0**
**MATE-N-LOK 6 POSITION HOUSING**

Copyright © Briggs & Stratton. All Rights reserved

## *Electrical*

| REF NO | PART NO | QTY | DESCRIPTION |
|---|---|---|---|
| 415 | 1714480SM | 1 | PLUG<br>-(Plug for Ignition Switch Removal) |
| 578 | 84007350 | 1 | WIRE ASSEMBLY<br>-(Aids in Repowering Engine Application with 6-Pin Connector and Wires with Terminals to Create Custom Adapter Configurations) |
| 789 | 691996 | 1 | HARNESS, Wiring<br>-(For 16 Amp Alternators) |
| 789A | 841318 | 1 | HARNESS, Wiring<br>-(For 16 Amp Alternators with Solenoid Shift Starter) |
| 789B | 847601 | 1 | HARNESS, Wiring<br>-(For 20 Amp Alternators) |
| 789C | 847602 | 1 | HARNESS, Wiring<br>-(For 20 Amp Alternators with Solenoid Shift Starter) |

Not For Reproduction

Copyright © Briggs & Stratton. All Rights reserved

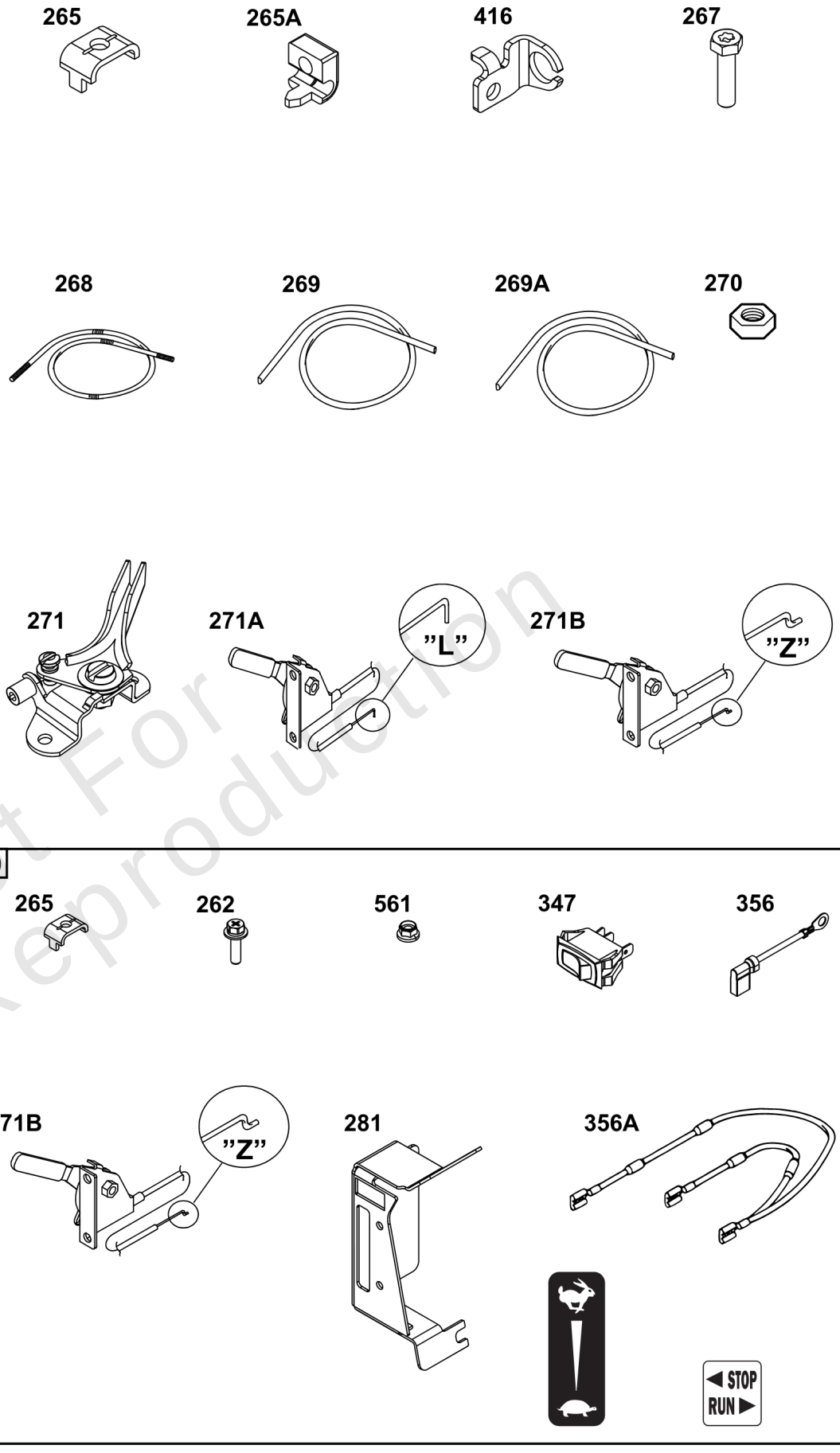


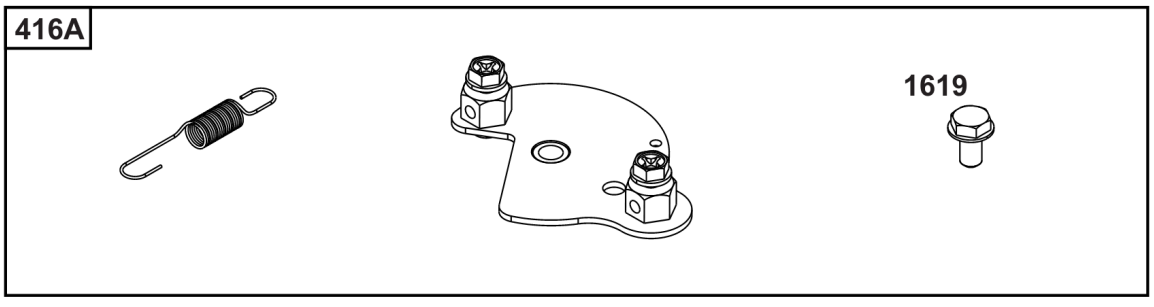


Not For Reproduction

## *Speed Control*

| REF NO | PART NO | QTY | DESCRIPTION |
|---|---|---|---|
| 262 | 841552 | 1 | SCREW |
| 265 | 691024 | 1 | CLAMP, Casing<br>-(Casing Clamp for Hard Casing) |
| 265A | 690798 | 1 | CLAMP, Casing<br>-(Casing Clamp for Soft Casing) |
| 267 | 792629 | 1 | SCREW<br>-(Screw for Casing Clamp) |
| 268 | 691025 | 1 | CASING, Control Wire<br>-(Wire Casing 72") |
| 269 | 26634 | 1 | WIRE, Control<br>-(Control Wire 78") |
| 269A | 93907 | 1 | WIRE, Control<br>-(Control Wire 100") |
| 270 | 691027 | 1 | NUT<br>-(Nut for Wire Casing) |
| 271 | 691028 | 1 | LEVER, Control<br>-(Speed Control Lever Assembly) |
| 271A | 692105 | 1 | LEVER, Control<br>-(Speed Control Lever Assembly) ('L' Shaped End) |
| 271B | 692541 | 1 | LEVER, Control<br>-(Speed Control Lever Assembly) ('Z' Shaped End) |
| 281 | 690742 | 1 | PANEL, Control |
| 347 | 691995 | 1 | SWITCH-ROCKER |
| 356 | 690796 | 1 | WIRE, Stop |
| 356A | 691999 | 1 | WIRE ASSEMBLY |
| 416 | 595196 | 1 | BRACKET, Throttle Cable<br>-(Casing Clamp for Snap-In Casing) |
| 416A | 84006945 | 1 | BRACKET, Throttle Cable |
| 561 | 806447 | 1 | NUT |
| 620 | 494052 | 1 | BRACKET, Control<br>-(Throttle Control for Vanguard V-Twin Horizontal Small Block) |
| 1619 | 691693 | 1 | SCREW |

Not For Reproduction

Copyright © Briggs & Stratton. All Rights reserved

VANGUARD®

COMMERCIAL POWER

BRIGGS & STRATTON®

Copyright © Briggs & Stratton. All Rights reserved