Parts Manual

Mfg. No: 290442-0454-01

Copyright © Briggs & Stratton. All Rights reserved

22-Jun-2026

Model Components

Page

Air Cleaner Grp. . . . 4
Air Cleaner Grp. . . . 6
Air Guides. . . . 8
Blower Housing Chart. . . . 12
Carburetor Assy. . . . 14
Controls. . . . 18
Controls. . . . 20
Crankshaft. . . . 22
Cylinder, Crankcase Cov. . . . 24
Elect. . . . 26
Elect, Panel Kit. . . . 28
Electric Starter. . . . 30
Electric Starter. . . . 32
Electric Starter. . . . 34
Flywheels, Screens, Fan. . . . 36
Fuel Tank Grp. . . . 38
Fuel Tank Grp. . . . 40
Gasket Sets. . . . 42
Head Assys. . . . 46
Manifold, Rocker Covers. . . . 50
Muffler Grp, Manifolds. . . . 52
Muffler Grps. . . . 54
Oil Grp. . . . 56
Piston Grp, Cam. . . . 58
Replacement Engine - US & Canada. . . . 60
Rewind Starter Assy. . . . 61
Rewind Starter Assy. . . . 63
Valve Kit, Carb Kits. . . . 65
Model 29, 30, 35 & 38 Engine Accessories Catalog. . . . 69
- Maintenance Kits. . . . 70
- Lubrication. . . . 72
- Starter Motor Side Outlet Mufflers. . . . 74
- Oil Filter Side Outlet Mufflers. . . . 76
- Oil Filter Side Outlet Manifolds. . . . 78
- Starter Motor Side Outlet Manifolds. . . . 80
- Mufflers. . . . 82
- Center Outlet Mufflers. . . . 84
- Muffler Guards and Shields. . . . 86
- Spark Arrestors and Deflectors. . . . 88
- Muffler Mounting Hardware. . . . 90
- Flywheel and Air Intake Guards. . . . 92
- PTO. . . . 94
- Electrical. . . . 96
- Speed Control. . . . 98

Not For Reproduction

Copyright © Briggs & Stratton. All Rights reserved

Air Cleaner Grp

Mfg. No: 290442-0454-01

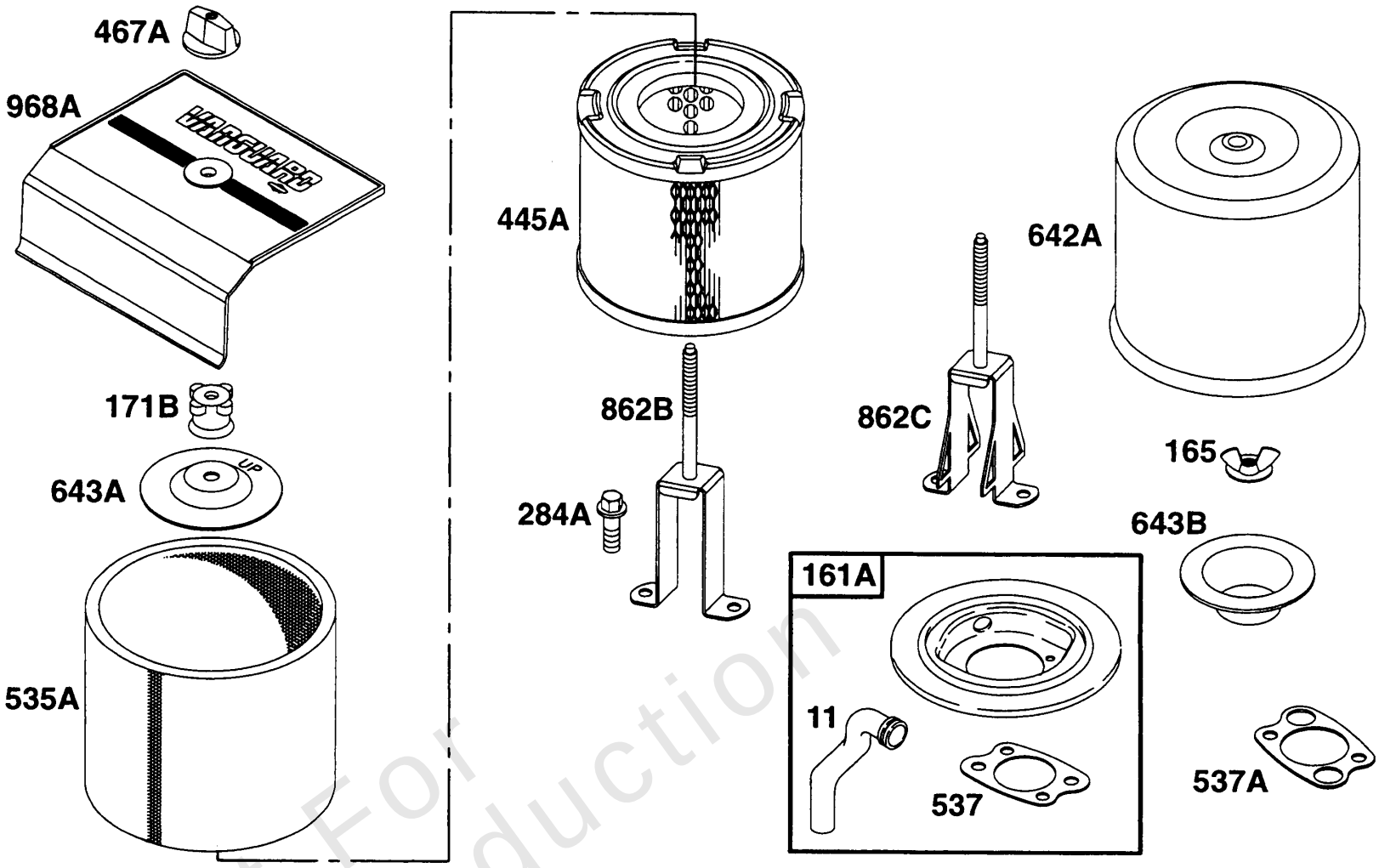

Not For Reproduction

Copyright © Briggs & Stratton. All Rights reserved

Air Cleaner Grp

REF NO	PART NO	QTY	DESCRIPTION
11	806114		TUBE, Breather -Used After Code Date 96101000
161A	808117		BASE, Air Cleaner -Used Before Code Date 96101100
161A	808414		BASE, Air Cleaner -Used After Code Date 96101000
165	94289		NUT
171B	281051		NUT
284A	810037		SCREW -(Fuel Tank) (Tank)
445A	393957		FILTER, A/C Cartridge
467A	493903		KNOB, Air Cleaner Cover
535A	271794		FILTER, Air Cleaner Foam
537A	805003		GASKET, Air Cleaner -Included in Gasket Set-See Ref. 358
537	805655		GASKET, Air Cleaner -Included in Gasket Set-See Ref. 358
642A	224885		COVER, Air Cleaner
643B	222272		RETAINER, Air Filter
643A	224198		RETAINER, Air Filter
862B	492133		STRAP/STUD, Air Cleaner Mounting
862C	808113		STRAP/STUD, Air Cleaner Mounting
968A	280903		COVER, Air Cleaner

Not For Reproduction

Copyright © Briggs & Stratton. All Rights reserved

Mfg. No: 290442-0454-01

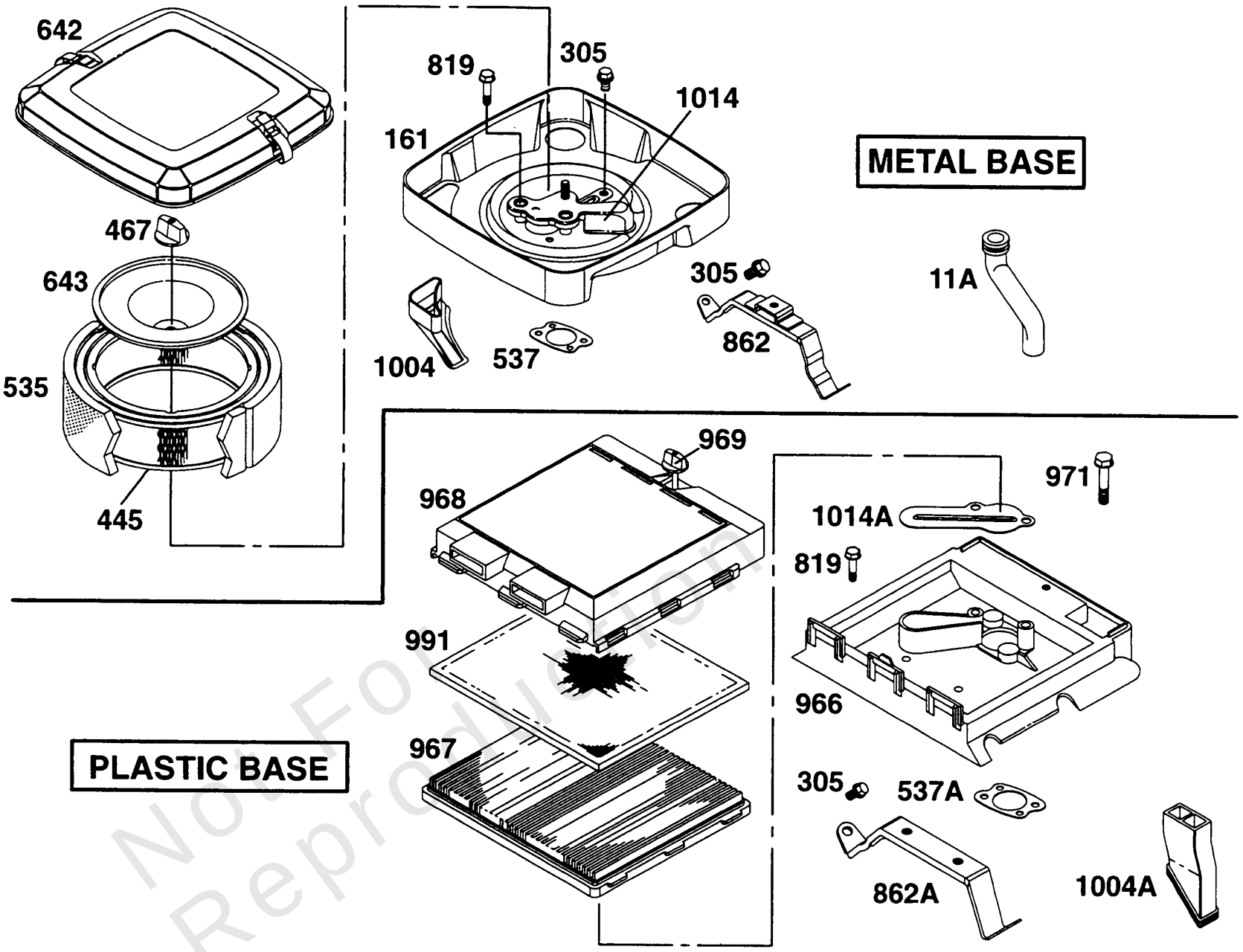

Not For Reproduction

Copyright © Briggs & Stratton. All Rights reserved

Air Cleaner Grp

REF NO	PART NO	QTY	DESCRIPTION
11A	805362		TUBE, Breather -Used Before Code Date 96101100
161	807857		BASE, Air Cleaner -(Metal)
305	805406		SCREW
445	394018		FILTER, A/C Cartridge
467	491875		NUT -(Air Cleaner)
535	272490		FILTER, Pre Cleaner
537A	805003		GASKET, Air Cleaner -Included in Gasket Set-See Ref. 358
537	805655		GASKET, Air Cleaner -Included in Gasket Set-See Ref. 358
642	807862		COVER, Air Cleaner
643	805631		RETAINER, Air Filter
819	805057		SCREW -(Oil Pump)
862A	807563		STRAP/STUD, Air Cleaner Mounting
862	807796		STRAP/STUD, Air Cleaner Mounting
966	807564		BASE, Air Cleaner -(Plastic)
967	805113		FILTER, A/C Cartridge
968	805359		COVER, Air Cleaner
969	807565		SCREW
971	805405		SCREW
991	805267		FILTER, A/C Cartridge
1004A	805363		DUCT, Air
1004	805632		DUCT, Air
1014A	805370		SHIELD, Carburetor
1014	807797		SHIELD, Carburetor

Not For Reproduction

Mfg. No: 290442-0454-01

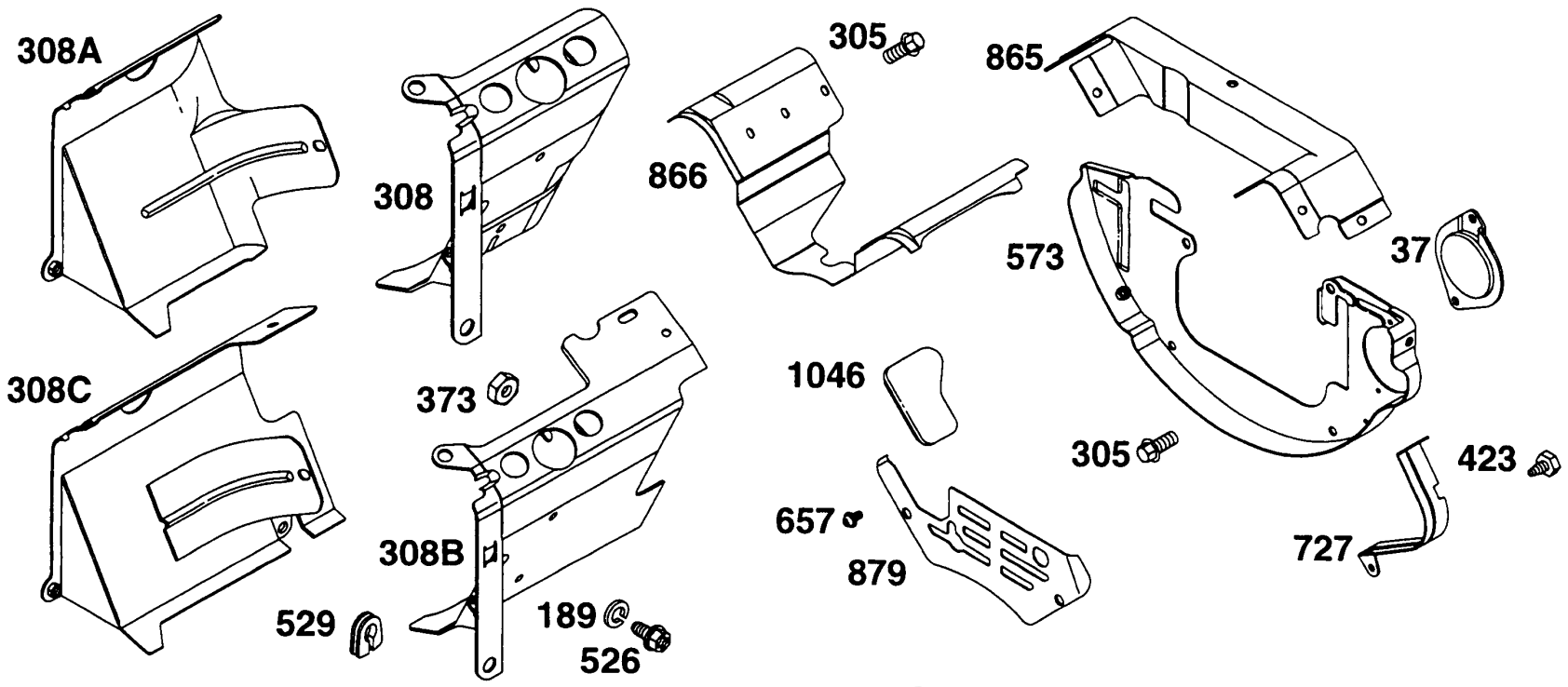

Not For Reproduction

Copyright © Briggs & Stratton. All Rights reserved

Air Guides

REF NO	PART NO	QTY	DESCRIPTION
37	805504		GUARD, Flywheel -(Red)
37	805506		GUARD, Flywheel -(Black)
189	805449		WASHER -(Oil Filter Adapter)
305	805406		SCREW
308A	807869		COVER, Cylinder Head -(Cylinder 2) -Used After Code Date 90111600
308B	808310		COVER, Cylinder Head -Used After Code Date 95071400
308B	807658		COVER, Cylinder Head -(Cylinder 1) Or 807650 Cover-Cylinder (Cylinder #1 Red)
308C	807659		COVER, Cylinder Head -(Cylinder 2) -Used Before Code Date 90111700
308A	807657		GUIDE, AIR -(Cylinder 2) -Used Before Code Date 90111700
308B	807870		COVER, Cylinder Head -(Cylinder 1) -Used After Code Date 90111600 and Before Code Date 95071500
308C	808100		COVER, Cylinder Head -(Cylinder 2) -Used After Code Date 90111600
308	807656		COVER, Cylinder Head -(Cylinder 1) -Used Before Code Date 90111700
308	807868		COVER, Cylinder Head -(Cylinder 1) -Used After Code Date 90111600 and Before Code Date 95071500
308	808309		COVER, Cylinder Head -Used After Code Date 95071400
373	805383		NUT -(Governor Lever)
423	805260		SCREW -(Starter Gear Cover)
526	805448		SCREW -(Regulator)
529	805641		GROMMET
573	807655		PLATE, Back -(Red)
573	807663		PLATE, Back -(Black)
657	805009		SCREW -(Carburetor Cover)
657	805762		SCREW
727	805503		COVER, Starter Drive -(Red)
727	805505		COVER, Starter Drive -(Black)
865	807661		COVER, Air Guide -(Black)
866	805738		COVER, Air Guide -(Black)

Not For Reproduction

Footnotes:

Or 807649 Cover-Cylinder (Cylinder #2 Red)
Or 807651 Cover-Cylinder (Cylinder #2 Red)

Copyright © Briggs & Stratton. All Rights reserved

Mfg. No: 290442-0454-01

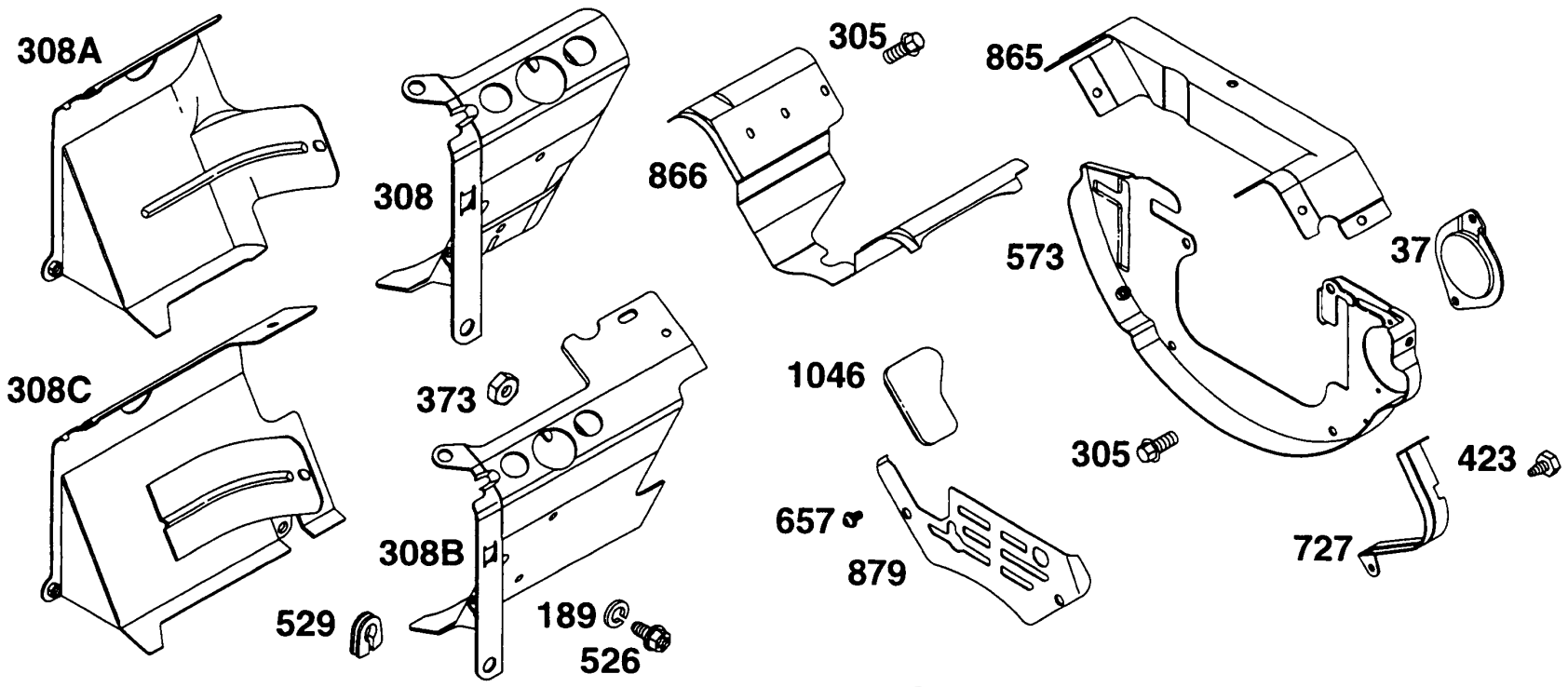

Not For Reproduction

Copyright © Briggs & Stratton. All Rights reserved

Air Guides

REF NO	PART NO	QTY	DESCRIPTION
866	807652		COVER, Air Guide -(Red)
879	805841		COVER, Carburetor/EFI
1046	805753		PLUG, Blower Housing

Not For Reproduction

Footnotes:

Or 807649 Cover-Cylinder (Cylinder #2 Red)
Or 807651 Cover-Cylinder (Cylinder #2 Red)

Copyright © Briggs & Stratton. All Rights reserved

Mfg. No: 290442-0454-01

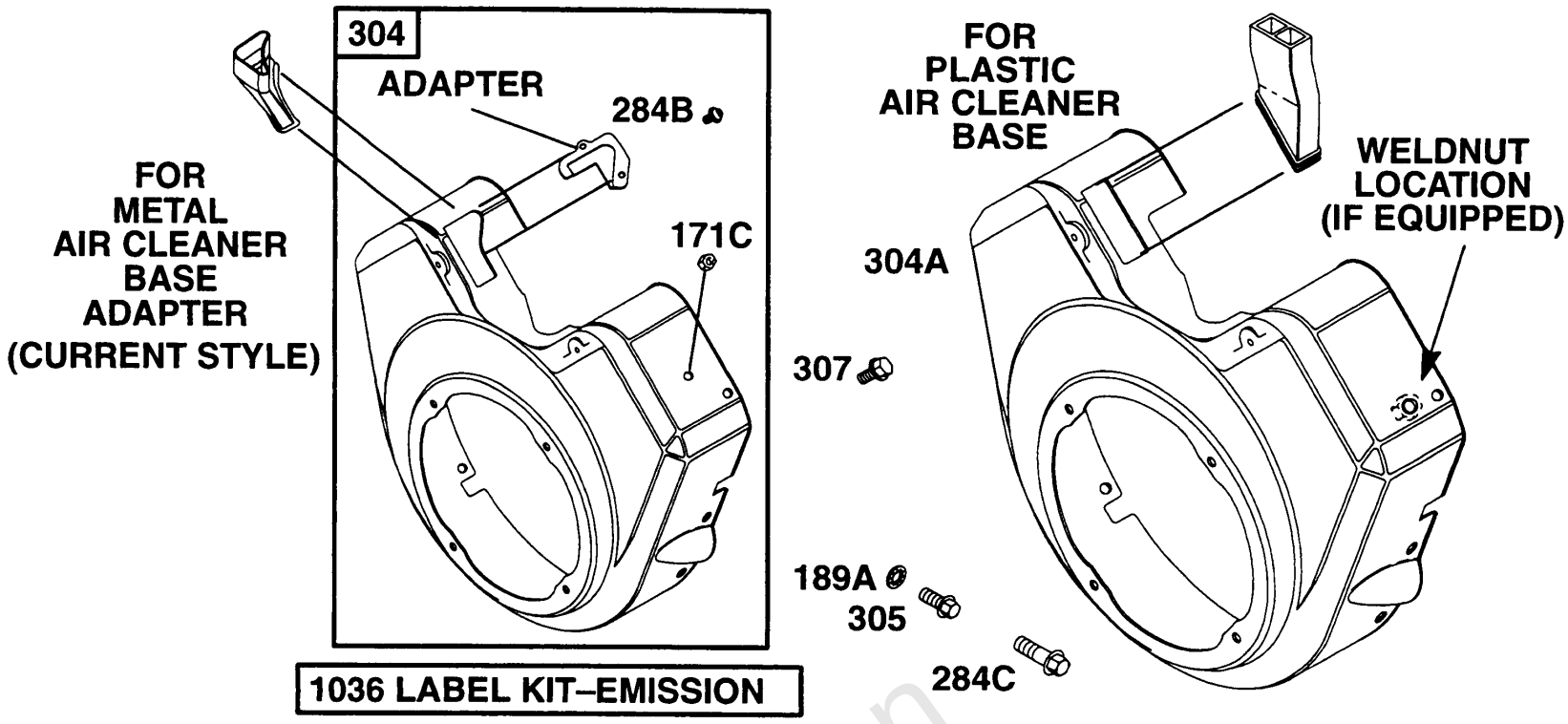

Not For Reproduction

Copyright © Briggs & Stratton. All Rights reserved

Blower Housing Chart

REF NO	PART NO	QTY	DESCRIPTION
171C	810056		NUT
189A	806101		WASHER
284B	93410		SCREW
284C	805247		SCREW
304A	807891		HOUSING, Blower -(Black) -Used Before Code Date 90111700
304A	807820		HOUSING, Blower -(Red; w/o Weld Nut, For Plastic Air Cleaner Base)
304A	807654		HOUSING, Blower -Used Before Code Date 90111700
304A	807892		HOUSING, Blower -(Red) -Used Before Code Date 90111700
304A	807662		HOUSING, Blower -Used Before Code Date 90111700
304A	807814		HOUSING, Blower -(Black; w/o Weld Nut/Plastic Air Cleaner Base)
304A	808008		HOUSING, Blower -(Red; with Weld Nut/Plastic Air Cleaner Base)
304	808055		HOUSING, Blower -(Red; Without Weld Nut, For Metal Air Cleaner Base)
304	808408		HOUSING, Blower -(Black; w/o Weld Nut/Metal Air Cleaner Base)
305	805406		SCREW
307	805025		SCREW
307	805247		SCREW -Engines With Fuel Tanks

Not For Reproduction

Footnotes:

(Red; with Weld Nut, For Plastic Air Cleaner Base)
(Black; with Weld Nut/Plastic Air Cleaner Base)

Copyright © Briggs & Stratton. All Rights reserved

Mfg. No: 290442-0454-01

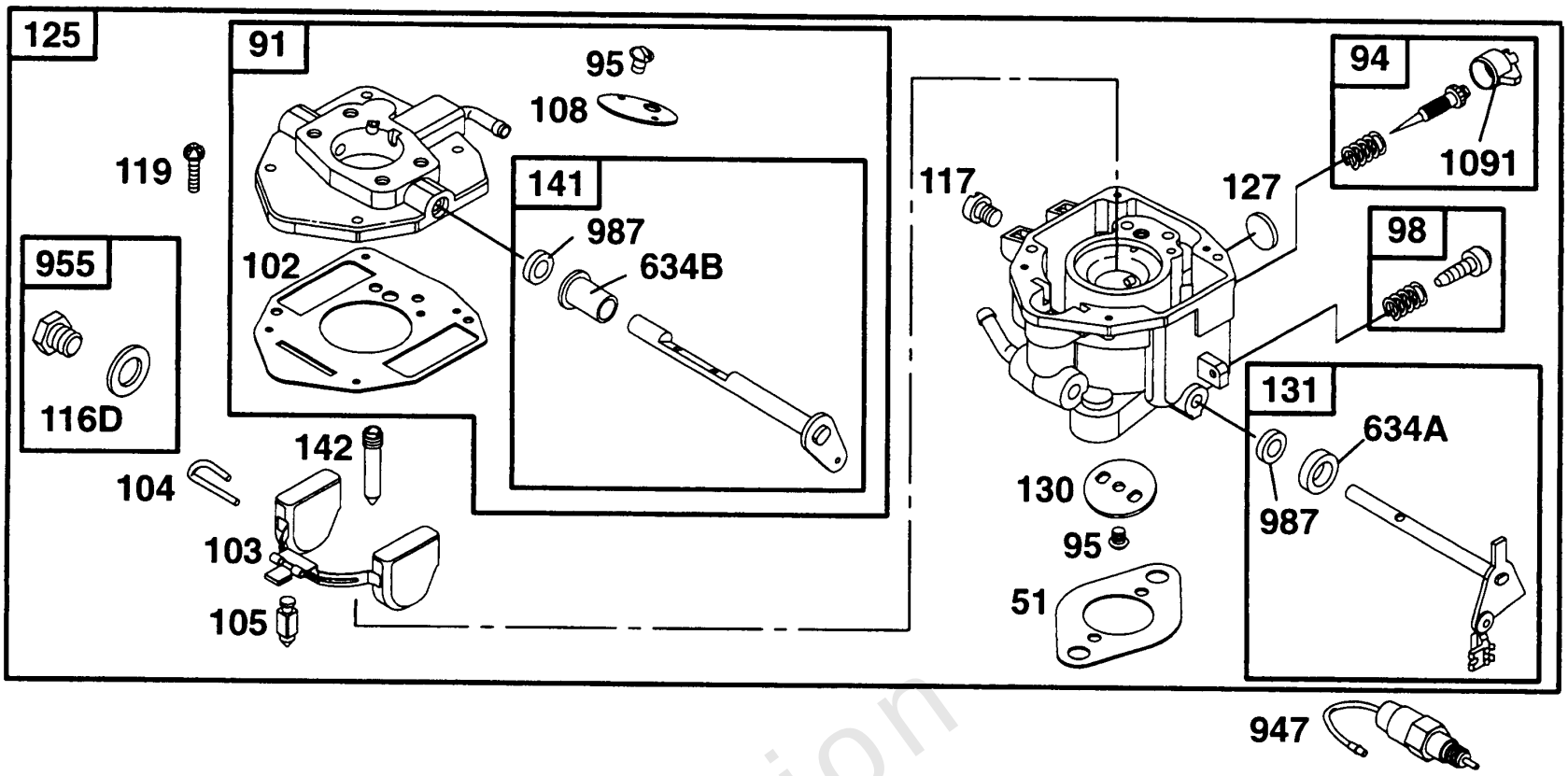

Not For Reproduction

Carburetor Assy

REF NO	PART NO	QTY	DESCRIPTION
51	805700		GASKET, Intake -Included in Gasket Set-See Ref. 358
91	807721		BODY, Upper Carburetor -Used Before Code Date 90120100
91	807919		BODY, Upper Carburetor
94	807719		VALVE, Idle Mixture -Used Before Code Date 95010100
94	808257		VALVE, Idle Mixture -Included in Carburetor Kit-See Ref. 121
95	805538		SCREW
98	808177		KIT, Idle Speed
102	805541		GASKET, Carburetor Body -Included in Carburetor Kit-See Ref. 121
103	805546		FLOAT, Carburetor
104	805545		PIN, Float Hinge -Included in Carburetor Kit-See Ref. 121
105	805547		VALVE, Float Needle -(Pump Feed) Included in Carburetor Kit-See Ref. 121
105	805620		VALVE, Float Needle -(Gravity Feed) Included in Carburetor Kit-See Ref. 121
108	805539		VALVE, Choke
116D	805549		WASHER, Sealing -Included in Carburetor Kit-See Ref. 121
117	805624		JET, Main -Used Before Code Date 95010100
117	805625		JET, Main -(High Altitude) -Used After Code Date 89111700
117	805852		JET, Main -Used After Code Date 94123100
119	805540		SCREW
125	807832		CARBURETOR -(Pump Feed) -Used Before Code Date 90120100
125	808249		CARBURETOR -(Pump Feed) -Used After Code Date 90113000
125	808250		CARBURETOR -(Gravity Feed)
127	805559		PLUG, Welch -Included in Carburetor Kit-See Ref. 121
130	805554		VALVE, Throttle
131	807720		SHAFT, Throttle
141	807722		SHAFT, Choke
142	805553		NOZZLE, Carburetor -Included in Carburetor Kit-See Ref. 121
634A	805557		SPACER -Included in Carburetor Kit-See Ref. 121
634B	805543		BUSHING, Choke Shaft -Included in Carburetor Kit-See Ref. 121
643A	224198		RETAINER, Air Filter
947	807664		SOLENOID, Fuel
955	807723		PLUG, Carburetor
987	805544		SEAL, Choke/Throttle Shaft -Included in Carburetor Kit-See Ref. 121

Not For Reproduction

Footnotes:

Included in Carburetor Kit-See Ref. 121

Copyright © Briggs & Stratton. All Rights reserved

Mfg. No: 290442-0454-01

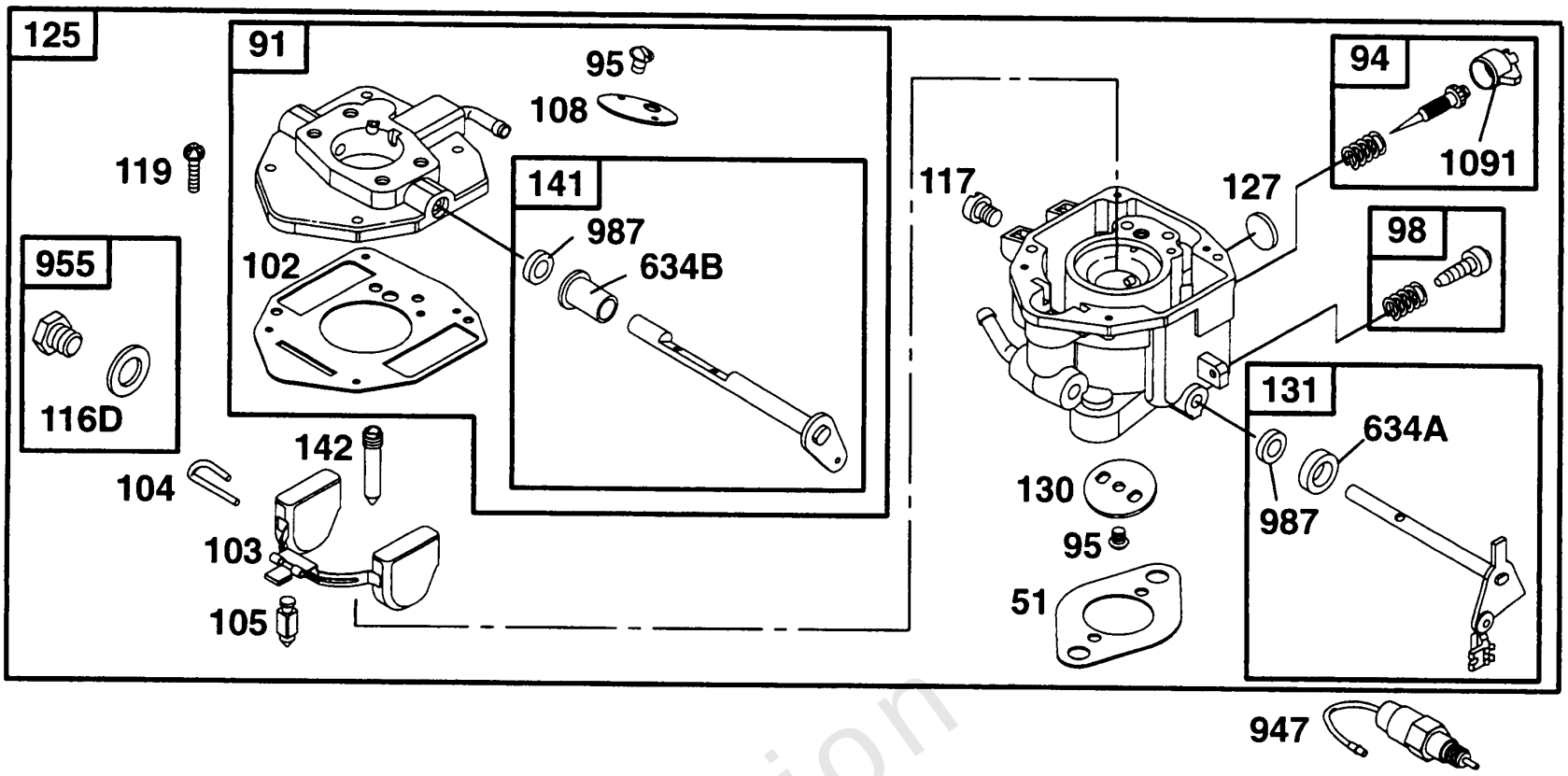

Not For Reproduction

Carburetor Assy

REF NO	PART NO	QTY	DESCRIPTION
1091	805862		CAP, Limiter -Included in Carburetor Kit-See Ref. 121

Not For Reproduction

Footnotes:

Included in Carburetor Kit-See Ref. 121

Copyright © Briggs & Stratton. All Rights reserved

Mfg. No: 290442-0454-01

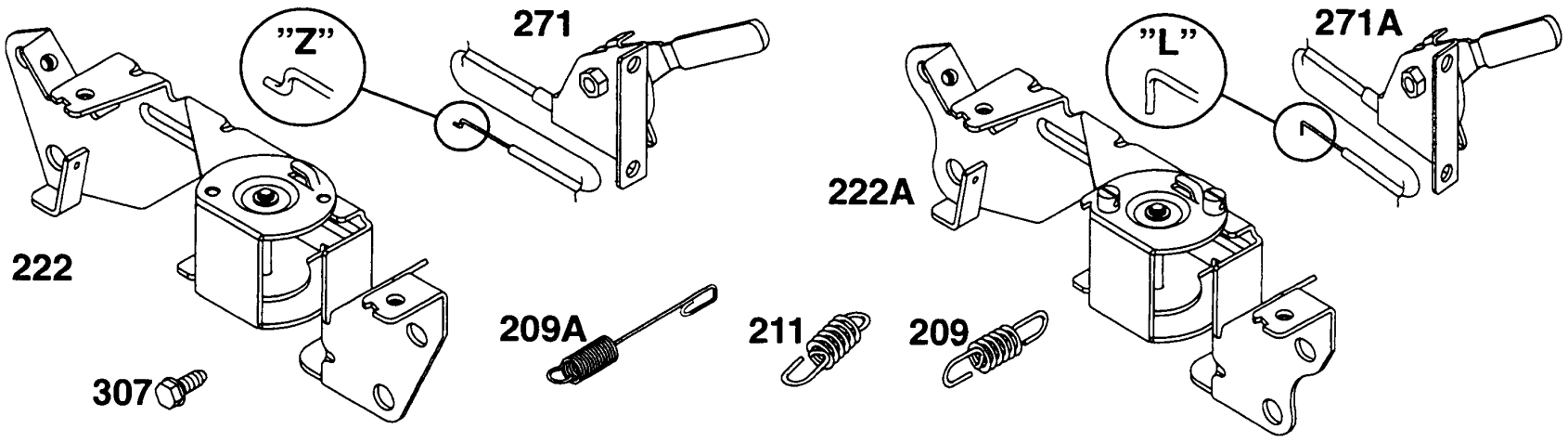

Not For Reproduction

Copyright © Briggs & Stratton. All Rights reserved

REF NO	PART NO	QTY	DESCRIPTION
209A	806060		SPRING, Governor -0327
209	805460		SPRING, Governor
211	805453		SPRING, Governed Idle
222A	808115		BRACKET, Control
222	807610		BRACKET, Control -Used Before Code Date 94120100
222	808195		BRACKET, Control -(Use W/Cntrl Lever &/or Wire W/Z-Formed End)
271A	807763		LEVER, Governor Control -(Cable Wire With a Z Formed End)
271A	808118		LEVER, Governor Control -(Cable Wire With A L Formed End)
271	290568		LEVER, Control
271	807763		LEVER, Governor Control -(Cable Wire With a Z Formed End)
307	805025		SCREW
307	805247		SCREW -Engines With Fuel Tanks

Not For Reproduction

Footnotes:

(Use W/Cntrl Lever &/or Wire W/Z-Formed End)
(Use W/Cntrl Lever &/or Wire W/L-Formed End)

Copyright © Briggs & Stratton. All Rights reserved

Mfg. No: 290442-0454-01

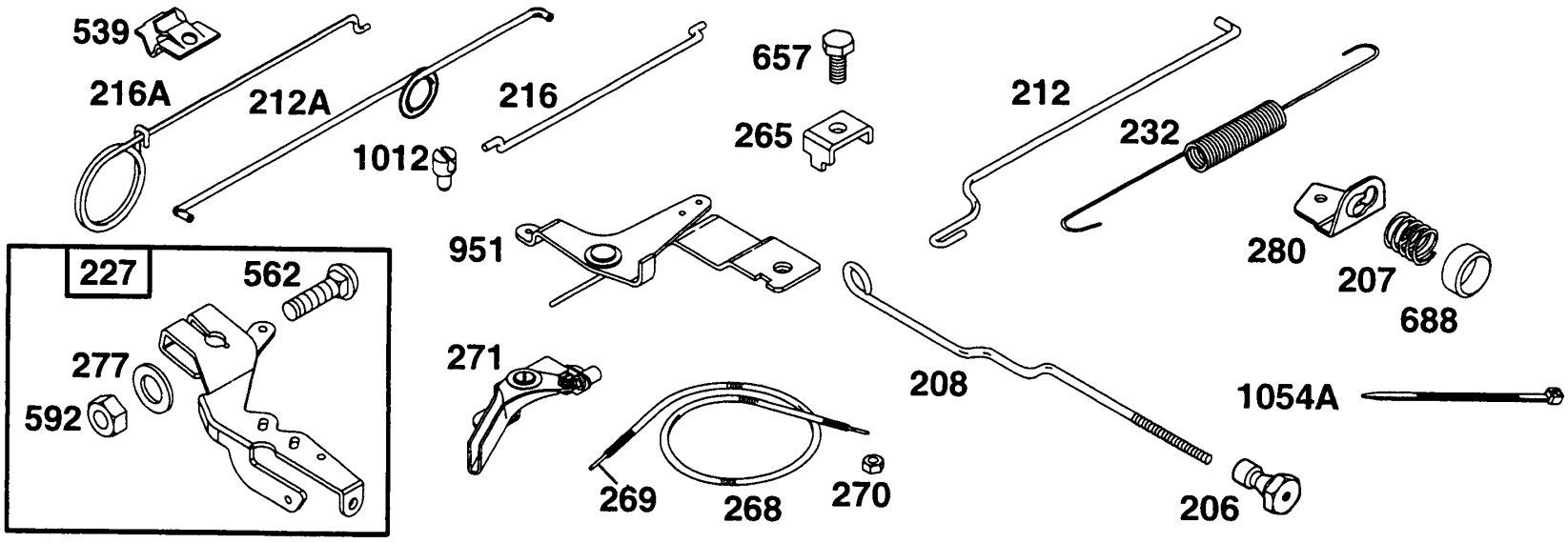

Not For Reproduction

Copyright © Briggs & Stratton. All Rights reserved

REF NO	PART NO	QTY	DESCRIPTION
206	805470		NUT
207	805473		SPRING, Friction
208	805471		ROD, Governor Control -Used Before Code Date 94120200
208	805996		ROD, Governor Control -Used After Code Date 94113000 and Before Code Date 96040100
208	806080		ROD, Governor Control -Used After Code Date 96033100
208	808453		ROD, Governor Control -Used Before Code Date 96040100
212A	805918		LINK, Throttle
212	805480		LINK, Throttle
216A	805509		ROD, Choke
216	805439		LINK, Choke
227	807528		LEVER, Governor Control
232	805465		SPRING/LINK, Mechanical Governor
265	221535		CLAMP, Casing -(Stamped Steel)
268	65616		CASING, Control Wire -(Cut To Required Length)
269	26633		WIRE, Control -(Cut To Required Length)
270	63426		NUT -(Control Wire Casing)
271	290568		LEVER, Control
271	807763		LEVER, Governor Control -(Cable Wire With a Z Formed End)
277	805018		WASHER -(Governor Lever)
280	805472		BRACKET, Rod -Used Before Code Date 95050100
280	805926		BRACKET, Rod
539	221372		CLIP, Control Rod
562	805381		BOLT -(Governor Lever)
592	805383		NUT -(Governor Lever)
592	92278		NUT -(Starting Switch)
657	805009		SCREW -(Carburetor Cover)
657	805762		SCREW
688	805485		CAP, Spring
951	807609		BRACKET, Control
1012	280869		RETAINER, Link
1054A	710349		TIE, Cable

Not For Reproduction

Footnotes:

(Use W/Cntrl Lever &/or Wire W/L-Formed End)

Copyright © Briggs & Stratton. All Rights reserved

Mfg. No: 290442-0454-01

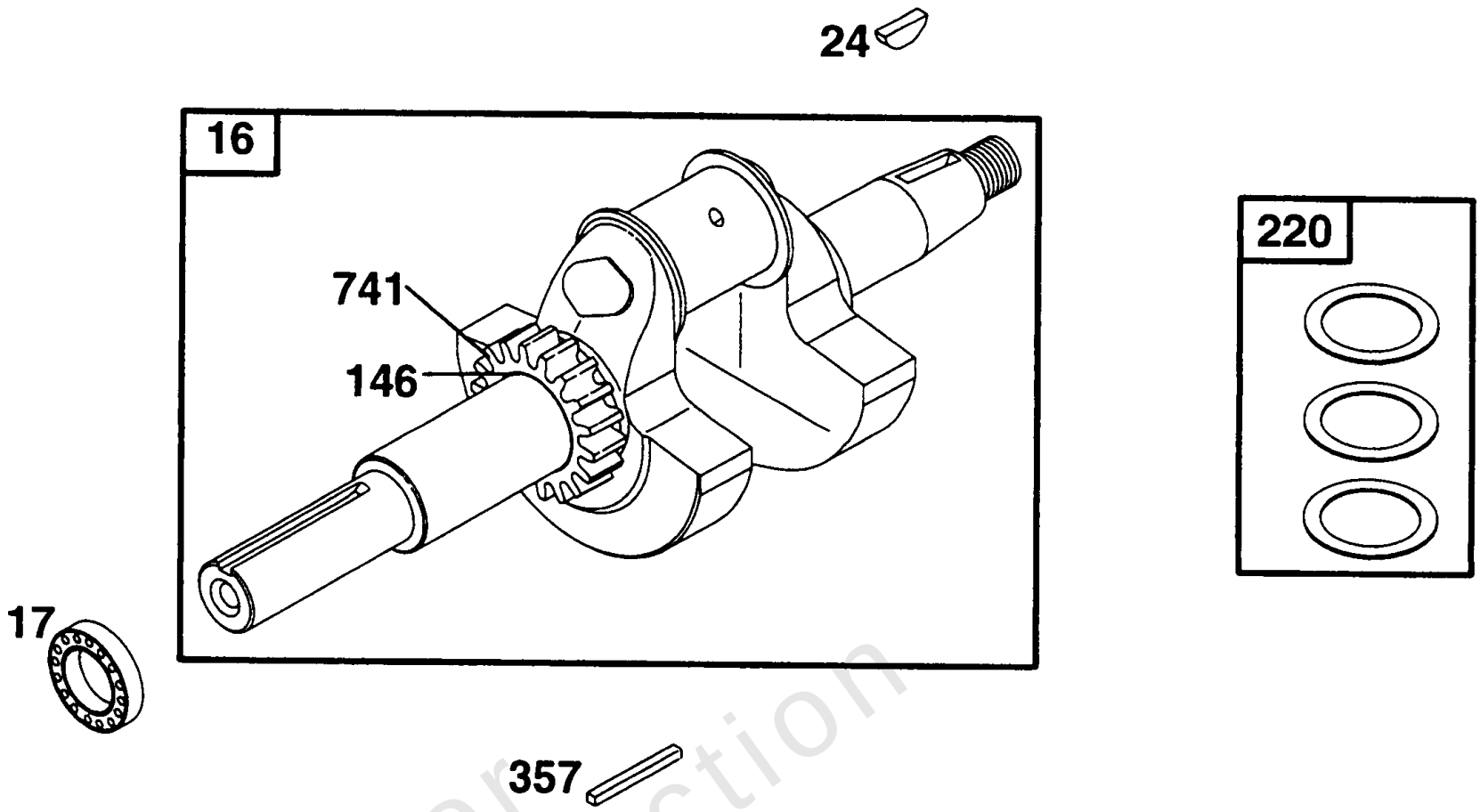

Not For Reproduction

Copyright © Briggs & Stratton. All Rights reserved

Crankshaft

REF NO	PART NO	QTY	DESCRIPTION
16	807589		CRANKSHAFT
17	805213		BEARING, Ball
24	805016		KEY, Flywheel -Used Before Code Date 95030100
24	806066		KEY, Flywheel
146	94196		KEY, Woodruff
220	807625		SHIM, End Play
357	91540		KEY, Drive Pulley -(1/4)
741	805675		GEAR, Timing

Not For Reproduction

Copyright © Briggs & Stratton. All Rights reserved

Mfg. No: 290442-0454-01

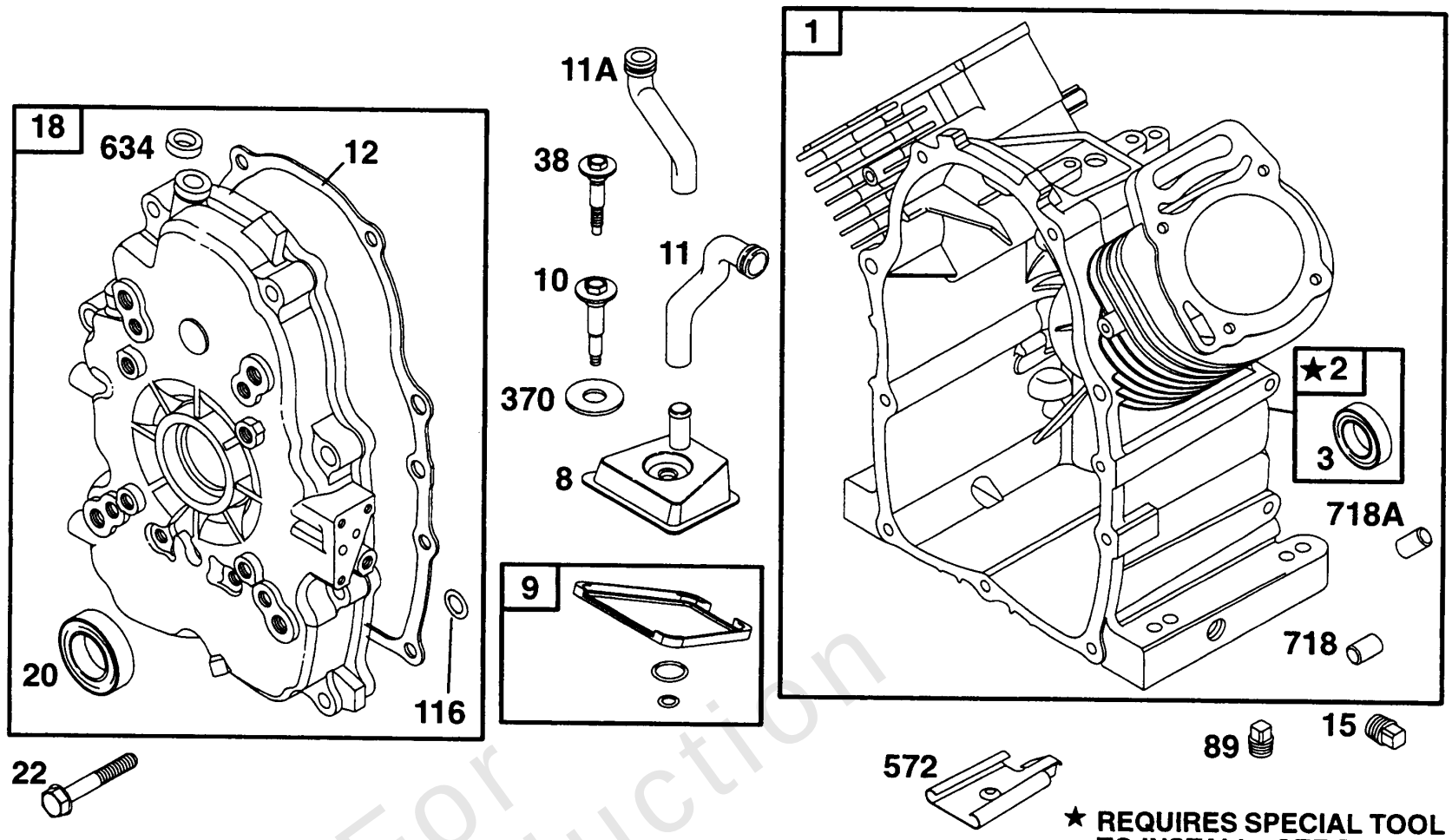

★ REQUIRES SPECIAL TOOL TO INSTALL. SEE REPAIR INSTRUCTION MANUAL.

1019 LABEL KIT

1058 OWNER'S MANUAL

Not For Reproduction

Cylinder, Crankcase Cov

REF NO	PART NO	QTY	DESCRIPTION
1	807521		CYLINDER ASSEMBLY -Used Before Code Date 97050100
1	808440		CYLINDER ASSEMBLY
2	807687		KIT, Bushing/Seal
3	805101		SEAL, Oil -Included in Gasket Set-See Ref. 358
8	807795		BREATHER ASSEMBLY
8	807893		BREATHER ASSEMBLY -Used Before Code Date 90111500
9	807688		GASKET, Breather -Included in Gasket Set-See Ref. 358
10	805751		SCREW
11A	805362		TUBE, Breather -Used Before Code Date 96101100
11	806114		TUBE, Breather -Used After Code Date 96101000
12	805112		GASKET, Crankcase -Used Before Code Date 97050100
12	806190		GASKET, Crankcase
15	805048		PLUG, Oil Drain
18	807628		COVER, Crankcase -Used Before Code Date 97050100
18	808502		COVER, Crankcase
20	805049		SEAL, Oil -Included in Gasket Set-See Ref. 358
22	805017		SCREW
38	805194		SCREW -Used Before Code Date 90111500
89	805059		PLUG, Oil Drain
116	805198		SEAL, O-Ring -(Crankcase Cover) Included in Gasket Set-See Ref. 358
116	806191		SEAL, O-Ring -(Crankcase Cover)
370	805484		WASHER
572	805197		BAFFLE, Breather
634	805416		WASHER, Sealing
718A	805102		PIN, Locating -Used Before Code Date 90091100
718	805103		PIN, Locating
1019	808035		KIT, Label
1058	272105		MANUAL, Operator's

Not For Reproduction

Footnotes:

Included in Gasket Set-See Ref. 358

Included in Gasket Set-See Ref. 358. Included in Valve Overhaul Kit-See Ref. 1033

Copyright © Briggs & Stratton. All Rights reserved

Mfg. No: 290442-0454-01

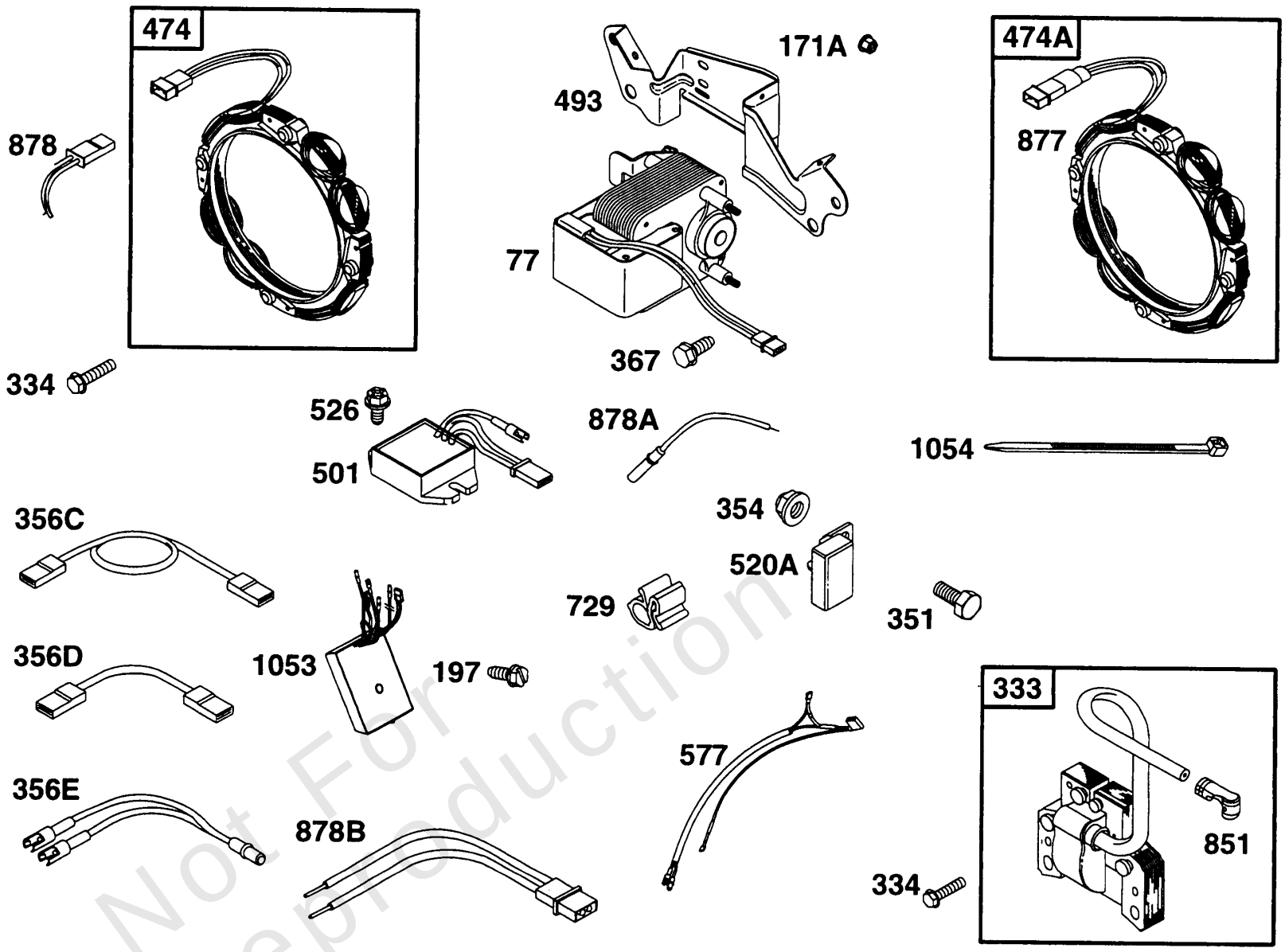

Not For Reproduction

Copyright © Briggs & Stratton. All Rights reserved

Elect

REF NO	PART NO	QTY	DESCRIPTION
77	495169		MOTOR, Servo
171A	94860		NUT
197	94866		SCREW
333	492341		ARMATURE, Magneto
334	805407		SCREW -(Armature)
351	805762		SCREW
354	805496		NUT
356C	807593		WIRE, Stop -(Cylinder 2) -Used Before Code Date 90120200
356E	497296		WIRE, Stop
356D	807594		WIRE, Stop -(Cylinder 1) -Used Before Code Date 90120200
367	810036		SCREW
474A	393474		ALTERNATOR -(Dual Circuit)
474	393295		ALTERNATOR -(10, 13, or 16 Amp-Depending on Size of Flywheel Magnets) (Regulated)
493	805917		BRACKET, Mounting
501	394890		REGULATOR -(10, 13, or 16 Amp, Depending on Size of Flywheel Magnets)
520A	807527		TERMINAL -Used Before Code Date 90120200
526	805448		SCREW -(Regulator)
577	494289		WIRE ASSEMBLY
729	280470		CLIP, Wire
851	493880		TERMINAL, Spark Plug
877	393456		WIRE/CONNECTOR, Alternator
878A	393422		WIRE ASSEMBLY -(Dc Only)
878B	399916		WIRE/CONN-ALTERNATOR -(16 Amp Regulated)
878	393362		HARNESS, Alternator -(Dual Circuit)
1053	494994		MODULE, Electronic Governor
1054	280275		TIE, Cable

Not For Reproduction

Mfg. No: 290442-0454-01

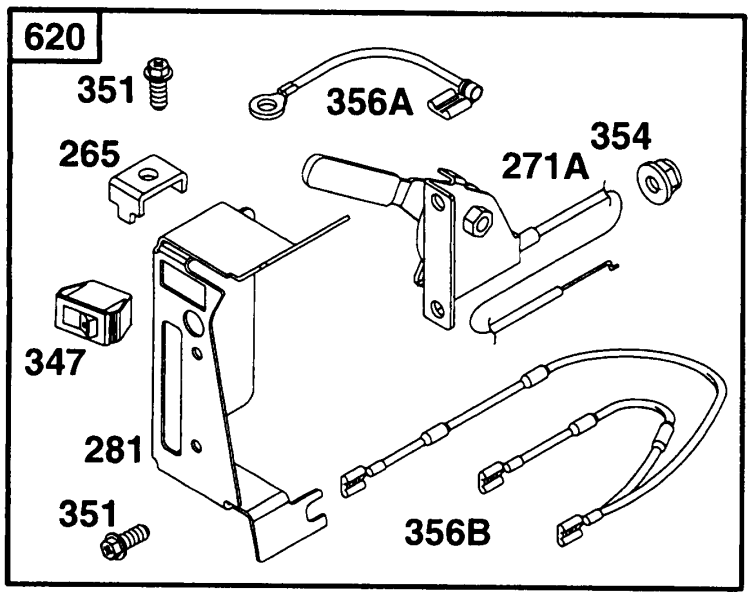

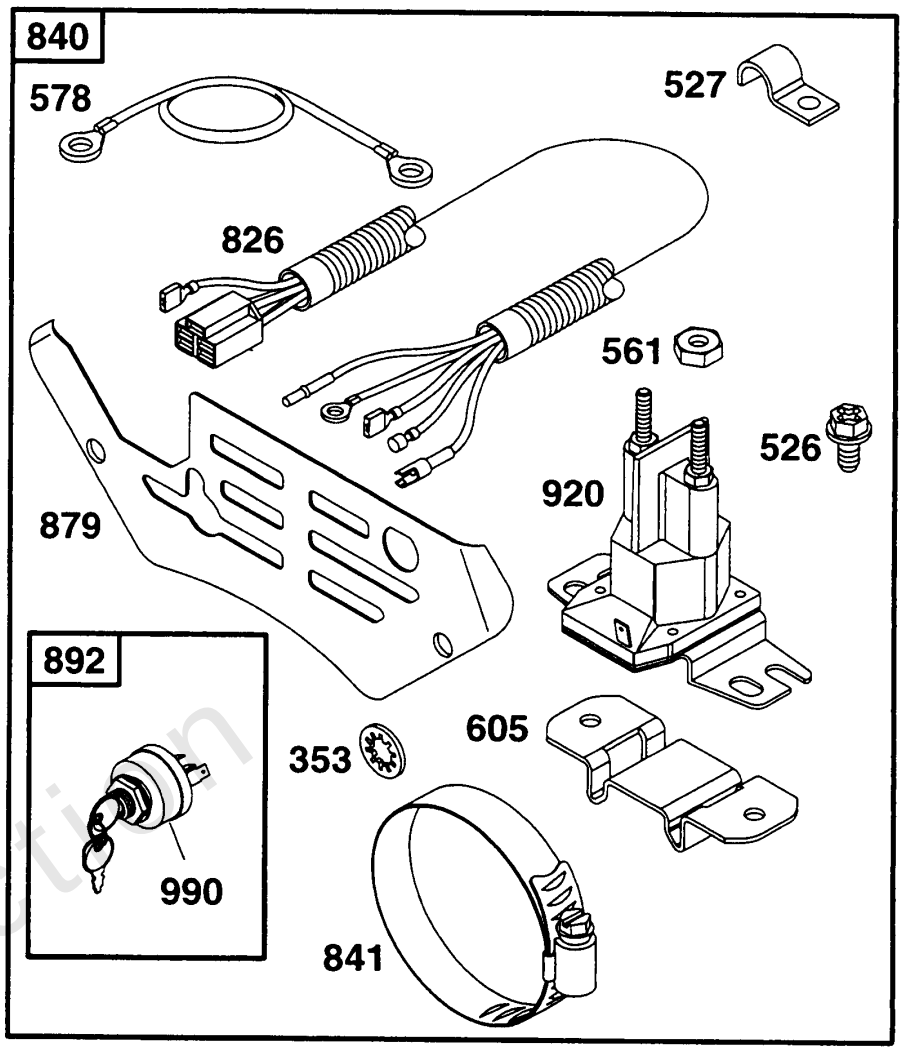

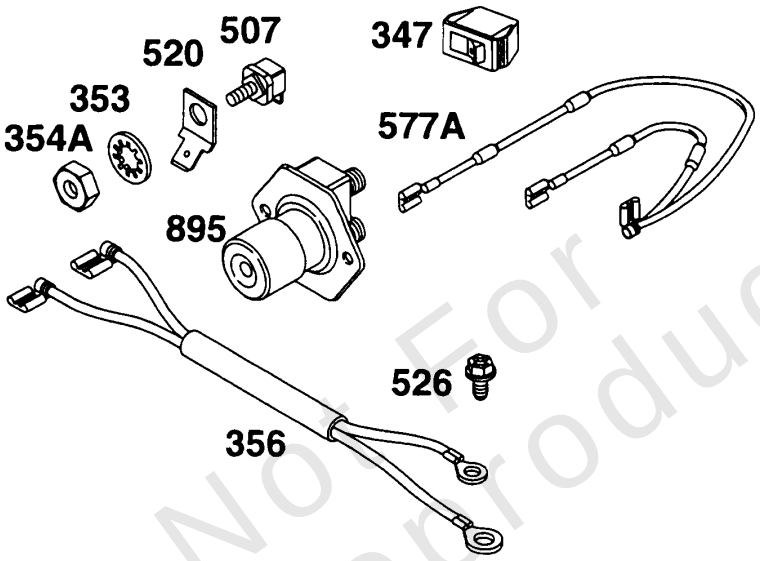

Not For Reproduction

Elect, Panel Kit

REF NO	PART NO	QTY	DESCRIPTION
265	221535		CLAMP, Casing -(Stamped Steel)
271A	807763		LEVER, Governor Control -(Cable Wire With a Z Formed End)
271A	808118		LEVER, Governor Control -(Cable Wire With A L Formed End)
281	805627		PANEL, Control
347	493521		SWITCH, Rocker -(Without Lamp)
351	805762		SCREW
353	92791		WASHER
354A	90576		NUT -(Ground Terminal)
354	805496		NUT
356B	493864		WIRE, Stop -(Ignition Coil)
356A	493863		WIRE, Stop
356	494771		WIRE, Stop
507	398525		INSULATOR
520	93722		TERMINAL, Ground
526	805448		SCREW -(Regulator)
527	223167		CLAMP, Tube
561	92278		NUT -(Starting Switch)
577A	493792		WIRE ASSEMBLY -(With Diodes)
578	493623		WIRE ASSEMBLY
605	222934		BRACKET, Mounting
620	494052		BRACKET, Control -(Ignition Coil)
826	493624		HARNESS, Wiring
840	807817		KIT, Panel
841	393514		CLAMP
879	805841		COVER, Carburetor/EFI
892	493625		SWITCH, Key -(Includes Keys)
895	299139		SWITCH, Starting
920	807829		SOLENOID, Starter
990	392832		SWITCH, Key

Not For Reproduction

Footnotes:

(Use W/Cntrl Lever &/or Wire W/L-Formed End)

Copyright © Briggs & Stratton. All Rights reserved

Mfg. No: 290442-0454-01

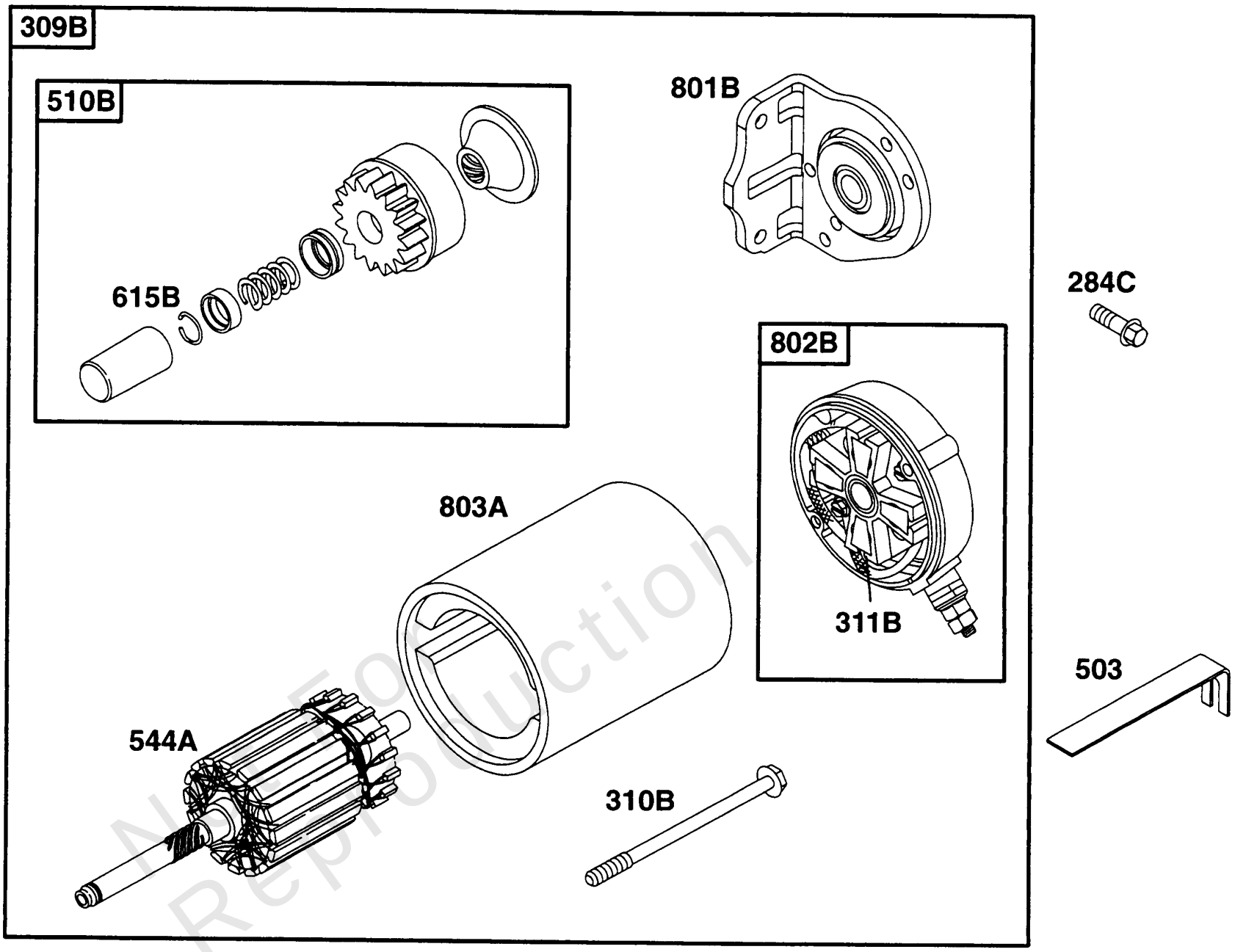

Non For Reproduction

Copyright © Briggs & Stratton. All Rights reserved

Electric Starter

REF NO	PART NO	QTY	DESCRIPTION
284C	805247		SCREW
309B	808106		MOTOR, Starter -(Steel Pinion)
310B	496880		SCREW
311B	496887		SET, Brush
503	806000		STRAP, Ground -(4 9/16 Housing)
510B	496881		DRIVE, Starter
544A	496816		ARMATURE, Starter
615B	94953		RING, Retaining
801B	496814		CAP, Drive
802B	496813		RETAINER, Brush
803A	496815		HOUSING, Starter

Not For Reproduction

Copyright © Briggs & Stratton. All Rights reserved

Mfg. No: 290442-0454-01

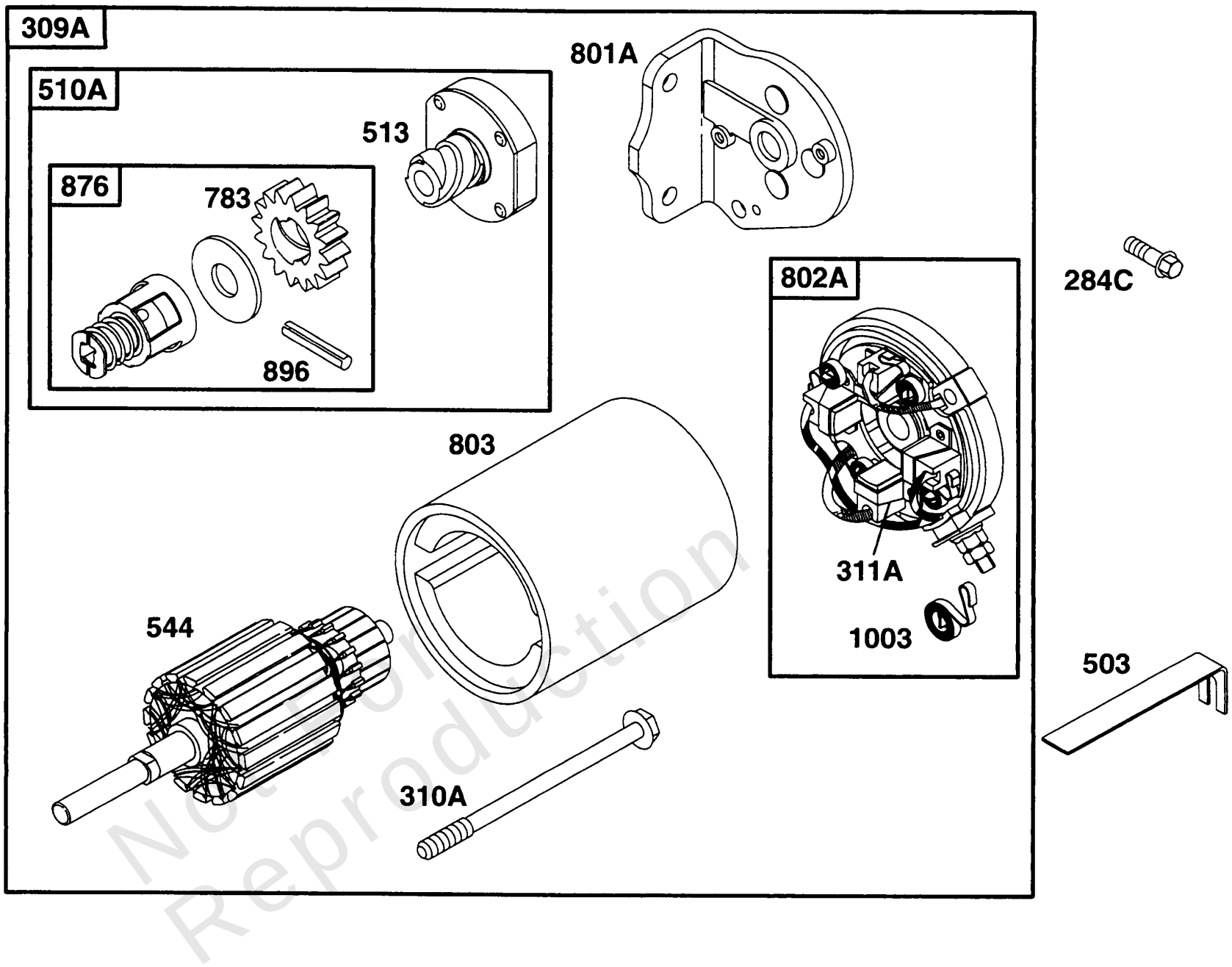

Non-Commercial Reproduction

Electric Starter

REF NO	PART NO	QTY	DESCRIPTION
284C	805247		SCREW
309A	494990		MOTOR, Starter -(4 3/8 Housing)
310A	94004		SCREW -(4 3/8 Housing)
311A	490311		SET, Brush -(4 9/16 Housing)
503	806000		STRAP, Ground -(4 9/16 Housing)
510A	495878		DRIVE, Starter -(4 3/8 Housing)
513	398003		CLUTCH, Starter
544	-----		No Nomenclature -Included in Gasket Set-See Ref. 358
544	490309		ARMATURE, Starter -(4 9/16 or 4 3/8 Housing)
783	280104		GEAR, Pinion -(Briggs & Stratton 12V)
801A	394856		CAP, Drive
802A	490310		HOUSING, Brush End -(4 1/2or 4 9/16 Housing)
802A	494988		CAP, End -(4 3/8 Housing)
803	-----		No Nomenclature -Included in Gasket Set-See Ref. 358
803	398892		HOUSING, Starter -(4 9/16 Housing)
803	494205		HOUSING, Starter -(4 3/8 or 4 9/16 Housing)
876	495877		DRIVE, Starter -(4 3/8 Housing)
896	94288		PIN, Drive Retainer
1003	490316		SPRING, Brush -(4 1/2 or 4 9/16 Housing)

Not For Reproduction

Copyright © Briggs & Stratton. All Rights reserved

Mfg. No: 290442-0454-01

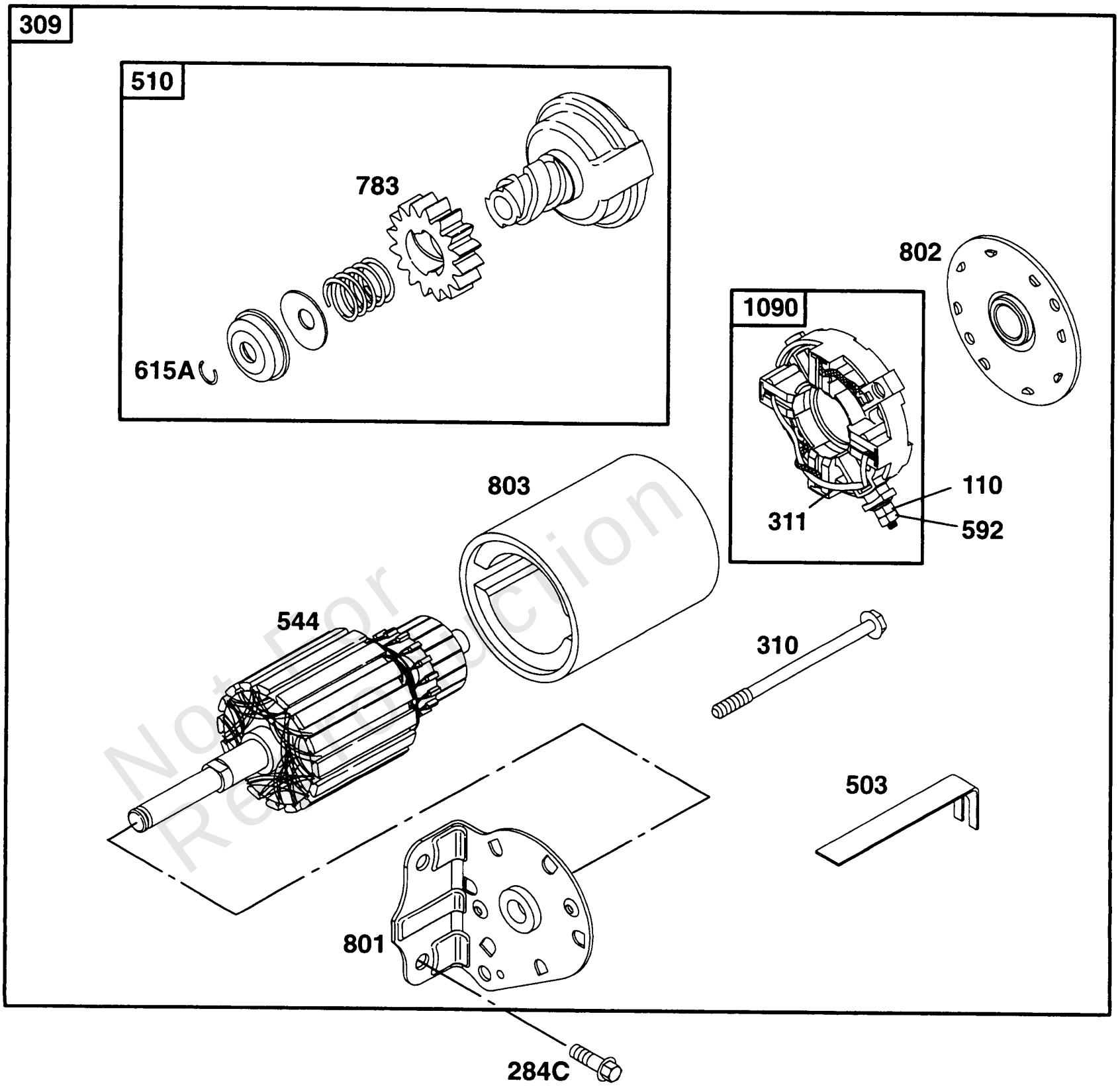

Not For Reproduction

Copyright © Briggs & Stratton. All Rights reserved

Electric Starter

REF NO	PART NO	QTY	DESCRIPTION
110	225137		WASHER
284C	805247		SCREW
309	499521		MOTOR, Starter -(4 3/8 Housing Length; For Alum Ring Gear Only)
310	95035		SCREW -(4 3/8 Housing)
311	497608		SET, Brush
503	806000		STRAP, Ground -(4 9/16 Housing)
510	497606		DRIVE, Starter -(Includes 693058 And 693059 Starter Gear)
544	-----		No Nomenclature -Included in Gasket Set-See Ref. 358
544	490309		ARMATURE, Starter -(4 9/16 or 4 3/8 Housing)
592	805383		NUT -(Governor Lever)
592	92278		NUT -(Starting Switch)
615A	263080		RING, Retaining
783	280104		GEAR, Pinion -(Briggs & Stratton 12V)
801	497626		CAP, Drive
802	497607		CAP, End
803	-----		No Nomenclature -Included in Gasket Set-See Ref. 358
803	398892		HOUSING, Starter -(4 9/16 Housing)
803	494205		HOUSING, Starter -(4 3/8 or 4 9/16 Housing)
1090	497605		RETAINER, Brush

Not For Reproduction

Copyright © Briggs & Stratton. All Rights reserved

Mfg. No: 290442-0454-01

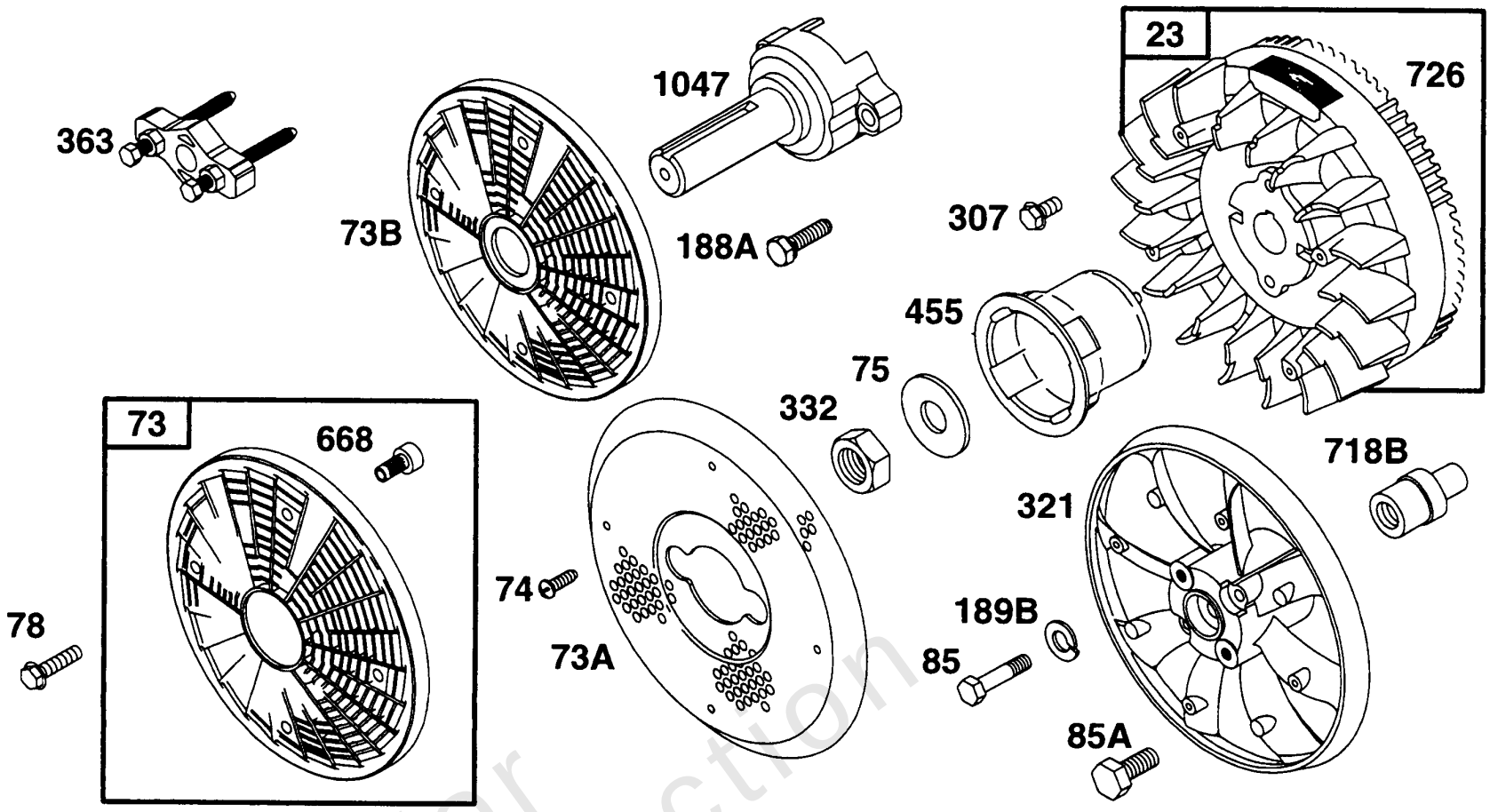

Not For Reproduction

Flywheels, Screens, Fan

REF NO	PART NO	QTY	DESCRIPTION
23	807520		FLYWHEEL
73A	224779		SCREEN, Rotating
73B	805723		SCREEN, Rotating
73	494439		SCREEN, Rotating
74	94626		SCREW
75	805007		WASHER -(Spring)
78	805447		SCREW
85A	94493		SCREW
85	94385		SCREW
188A	93847		SCREW -(Fuel Tank) (Tank)
189B	90366		WASHER
307	805025		SCREW
307	805247		SCREW -Engines With Fuel Tanks
321	213472		FAN, Booster
332	805021		NUT -(Flywheel)
363	19203		PULLER, Flywheel
455	805153		CUP, Flywheel -Used Before Code Date 93072600
455	805876		CUP, Flywheel
668	805402		SPACER
718B	805613		PIN, Locating
726	807805		GEAR, Ring
1047	807867		SHAFT, Stub

Not For Reproduction

Mfg. No: 290442-0454-01

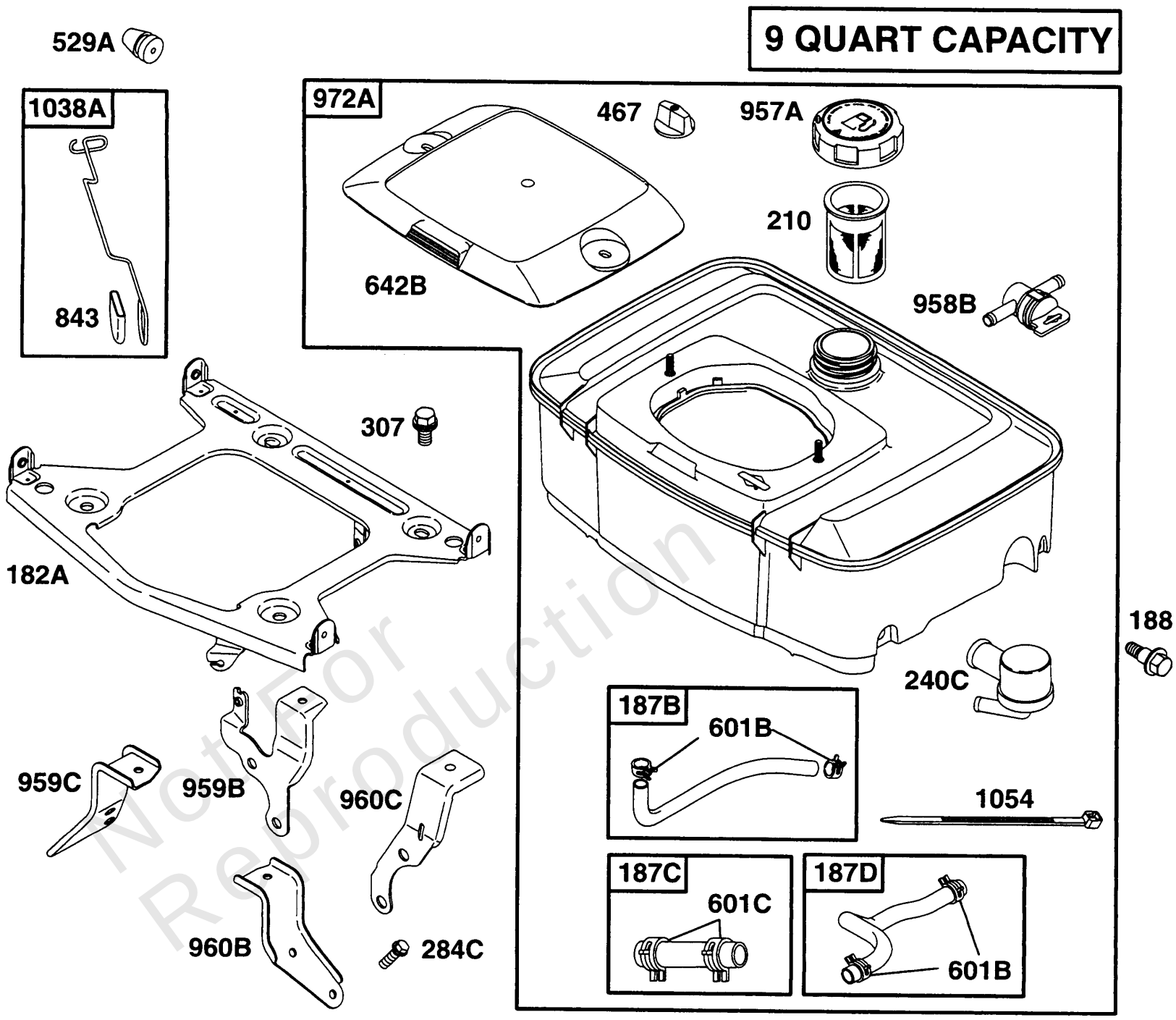

Not For Reproduction

Fuel Tank Grp

REF NO	PART NO	QTY	DESCRIPTION
182A	808119		BRACKET, Fuel Tank
187D	808123		LINE, Fuel
187B	808122		LINE, Fuel
187C	808121		LINE, Fuel
188	94895		SCREW
210	492044		STRAINER, Fuel -(In Tank)
240C	808116		FILTER, Fuel
284C	805247		SCREW
307	805025		SCREW
307	805247		SCREW -Engines With Fuel Tanks
467	491875		NUT -(Air Cleaner)
529A	805932		GROMMET -(Fuel Shut Off)
601B	93807		CLAMP, Hose -(Black)
601C	805921		CLAMP, Hose
642B	281385		COVER, Air Cleaner
843	280643		SLEEVE, Lever
957A	493988		CAP, Fuel Tank -(Plastic)
958B	494914		VALVE, Fuel Shut Off
959C	805923		BRACKET, Fuel Tank
959B	805919		BRACKET, Fuel Tank
960B	805924		BRACKET, Fuel Tank
960C	805925		BRACKET, Fuel Tank
972A	497914		TANK, Fuel
1038A	808120		ROD, Fuel Shut Off
1054	280275		TIE, Cable

Not For Reproduction

Footnotes:

(Use W/Cntrl Lever &/or Wire W/L-Formed End)

Copyright © Briggs & Stratton. All Rights reserved

Mfg. No: 290442-0454-01

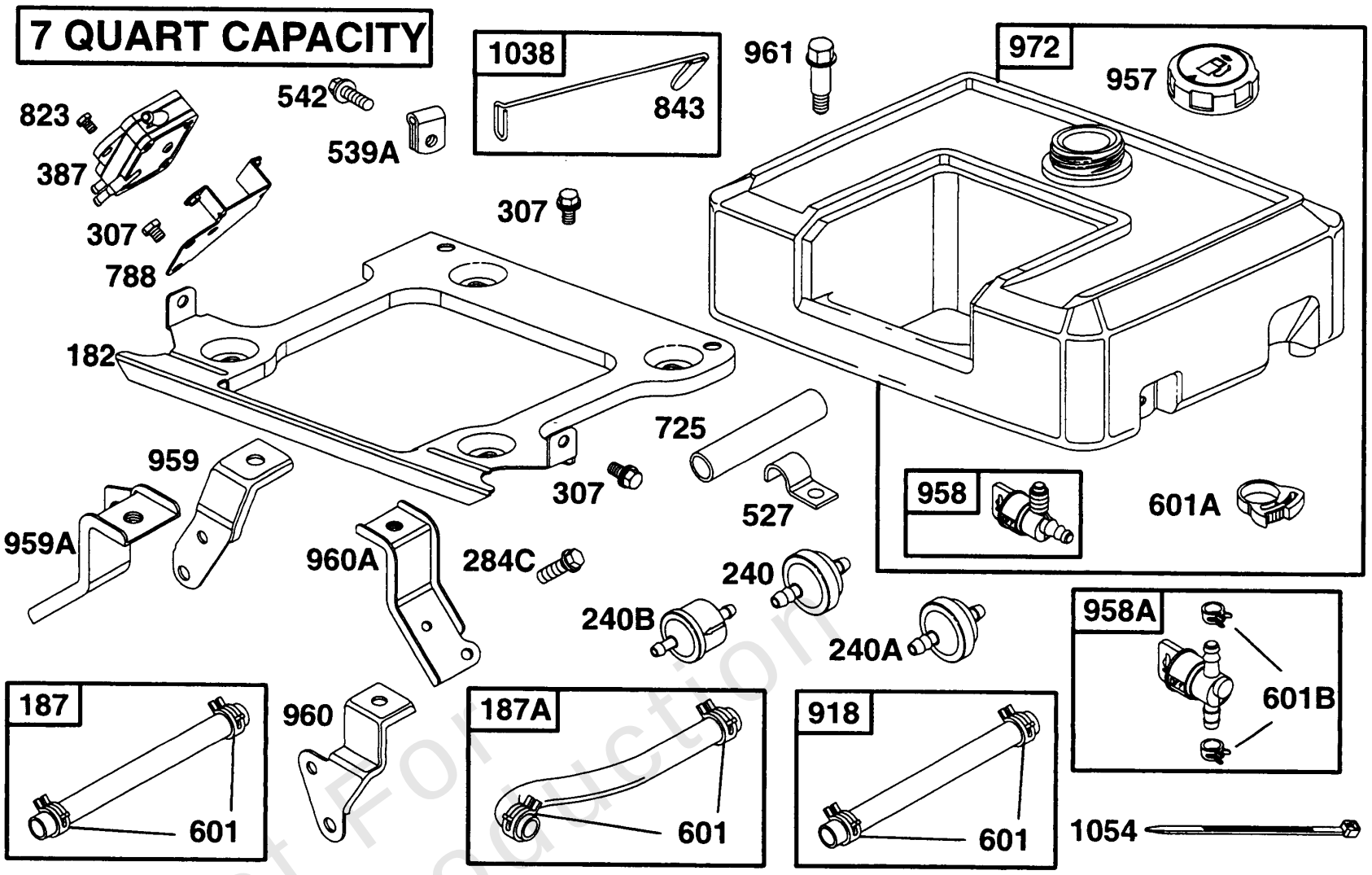

Not For Reproduction

Fuel Tank Grp

REF NO	PART NO	QTY	DESCRIPTION
182	492317		BRACKET, Fuel Tank
187A	398367		HOSE/CLAMP ASSEMBLY
187	492790		LINE, Fuel -(6 3/4)
240B	493629		FILTER, Fuel -(Fuel Pump)
240A	394358		FILTER, Fuel -(Fuel Pump)
240	298090		FILTER, Fuel
284C	805247		SCREW
307	805025		SCREW
307	805247		SCREW -Engines With Fuel Tanks
387	808322		PUMP, Fuel
527	223167		CLAMP, Tube
539A	94484		CLAMP
542	94504		SCREW
601B	93807		CLAMP, Hose -(Black)
601A	805813		CLAMP, Hose
601	93053		CLAMP, Hose -(Green)
725	280866		SHIELD, Heat -(20)
788	807685		BRACKET, Fuel Pump
823	805317		SCREW
843	280643		SLEEVE, Lever
918	393815		HOSE, Vacuum -(Cylinder To Impulse Pump)(Cut To Required Length)
957	491367		CAP, Fuel Tank -(Plastic)
958A	494768		VALVE, Fuel Shut Off -(Upper)
958	399517		VALVE, Fuel Shut Off -(Plastic)
959A	492320		BRACKET, Fuel Tank
959	492318		BRACKET, Fuel Tank
960A	492321		BRACKET, Fuel Tank
960	492319		BRACKET, Fuel Tank
961	94536		SCREW
972	492369		TANK, Fuel -(7 Quart) (Plastic)
1038	492374		ROD, Fuel Shut Off
1054	280275		TIE, Cable

Not For Reproduction

Footnotes:

(Use W/Cntrl Lever &/or Wire W/L-Formed End)

Copyright © Briggs & Stratton. All Rights reserved

Mfg. No: 290442-0454-01

358 GASKET SET

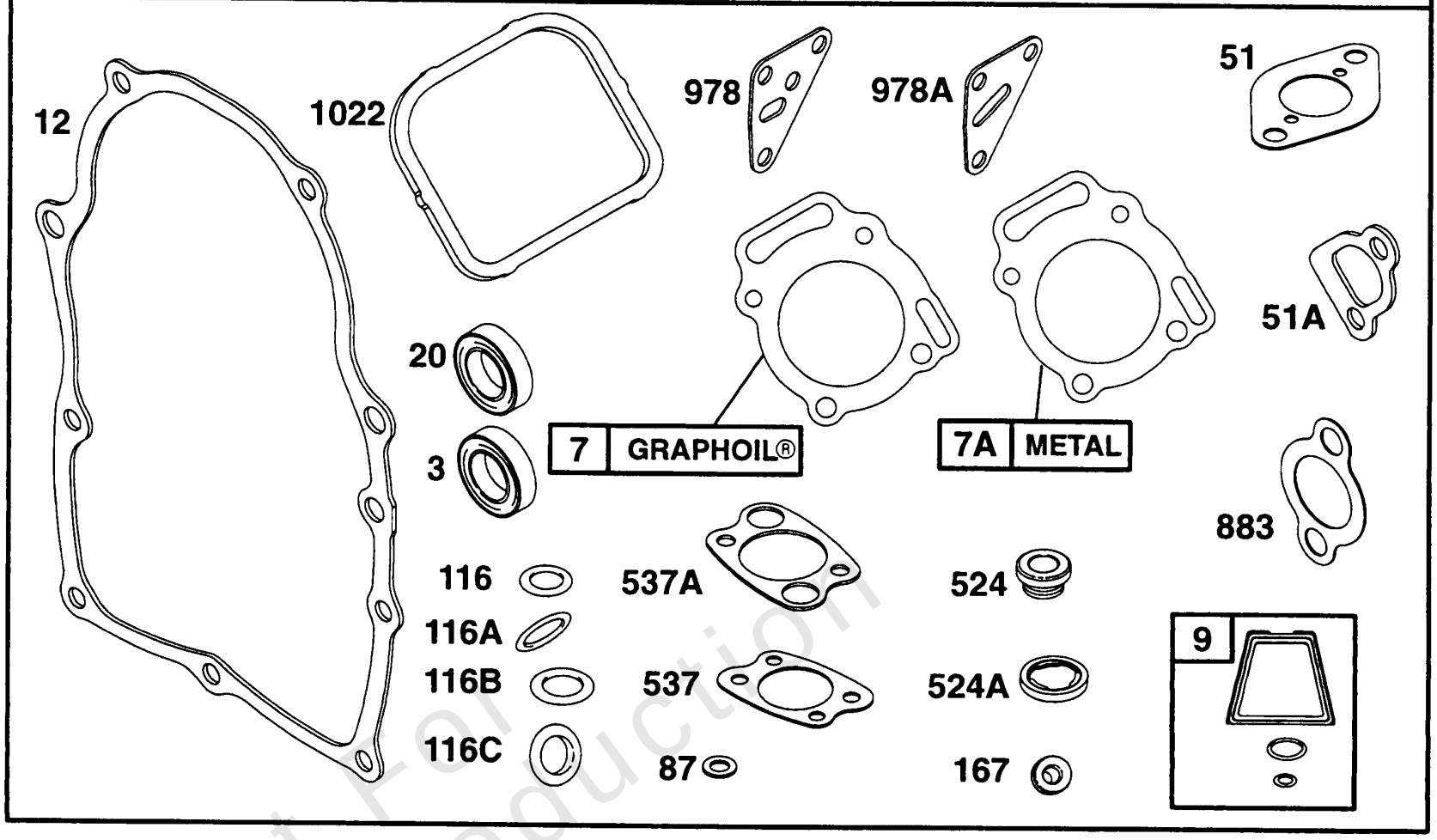

Not For Reproduction

Copyright © Briggs & Stratton. All Rights reserved

Gasket Sets

REF NO	PART NO	QTY	DESCRIPTION
3	805101		SEAL, Oil -Included in Gasket Set-See Ref. 358
7A	807986		GASKET, Cylinder Head -Used Before Code Date 96040100
7	806085		GASKET, Cylinder Head -Included in Gasket Set-See Ref. 358. Included in Valve Overhaul Kit-See Ref. 1033
9	807688		GASKET, Breather -Included in Gasket Set-See Ref. 358
12	805112		GASKET, Crankcase -Used Before Code Date 97050100
12	806190		GASKET, Crankcase
20	805049		SEAL, Oil -Included in Gasket Set-See Ref. 358
51A	805023		GASKET, Intake -(Manifold) Included in Gasket Set-See Ref. 358. Included in Valve Overhaul Kit-See Ref. 1033
51	805700		GASKET, Intake -Included in Gasket Set-See Ref. 358
87	805054		SEAL, Governor Shaft -Included in Gasket Set-See Ref. 358
116C	805316		SEAL, O-Ring -(Pick-up Tube) Included in Gasket Set-See Ref. 358
116B	805058		SEAL, O-Ring -(Oil Pump) Included in Gasket Set-See Ref. 358
116A	805386		SEAL, O-Ring -Included in Gasket Set-See Ref. 358
116	805198		SEAL, O-Ring -(Crankcase Cover) Included in Gasket Set-See Ref. 358
116	806191		SEAL, O-Ring -(Crankcase Cover)
167	805420		WASHER, Sealing -(Valve Cover) Included in Gasket Set-See Ref. 358. Included in Valve Overhaul Kit-See Ref. 1033
358	807989		GASKET SET, Engine -Used Before Code Date 96040100
358	808390		GASKET SET, Engine
524A	271983		SEAL, O-Ring -(Dipstick Tube) Included in Gasket Set-See Ref. 358. Included in Valve Overhaul Kit-See Ref. 1033
524	281370		SEAL, O-Ring -Included in Gasket Set-See Ref. 358
537A	805003		GASKET, Air Cleaner -Included in Gasket Set-See Ref. 358
537	805655		GASKET, Air Cleaner -Included in Gasket Set-See Ref. 358
883	805024		GASKET, Exhaust -Included in Gasket Set-See Ref. 358. Included in Valve Overhaul Kit-See Ref. 1033
978A	805229		GASKET, Oil Adapter -Included in Gasket Set-See Ref. 358
978	805250		GASKET, Oil Adapter -(Oil Filter Adapter) Included in Gasket Set-See Ref. 358

Not For Reproduction

Footnotes:

Included in Gasket Set-See Ref. 358
Included in Valve Overhaul Kit-See Ref. 1033
Included in Gasket Set-See Ref. 358. Included in Valve Overhaul Kit-See Ref. 1033

Copyright © Briggs & Stratton. All Rights reserved

Mfg. No: 290442-0454-01

358 GASKET SET

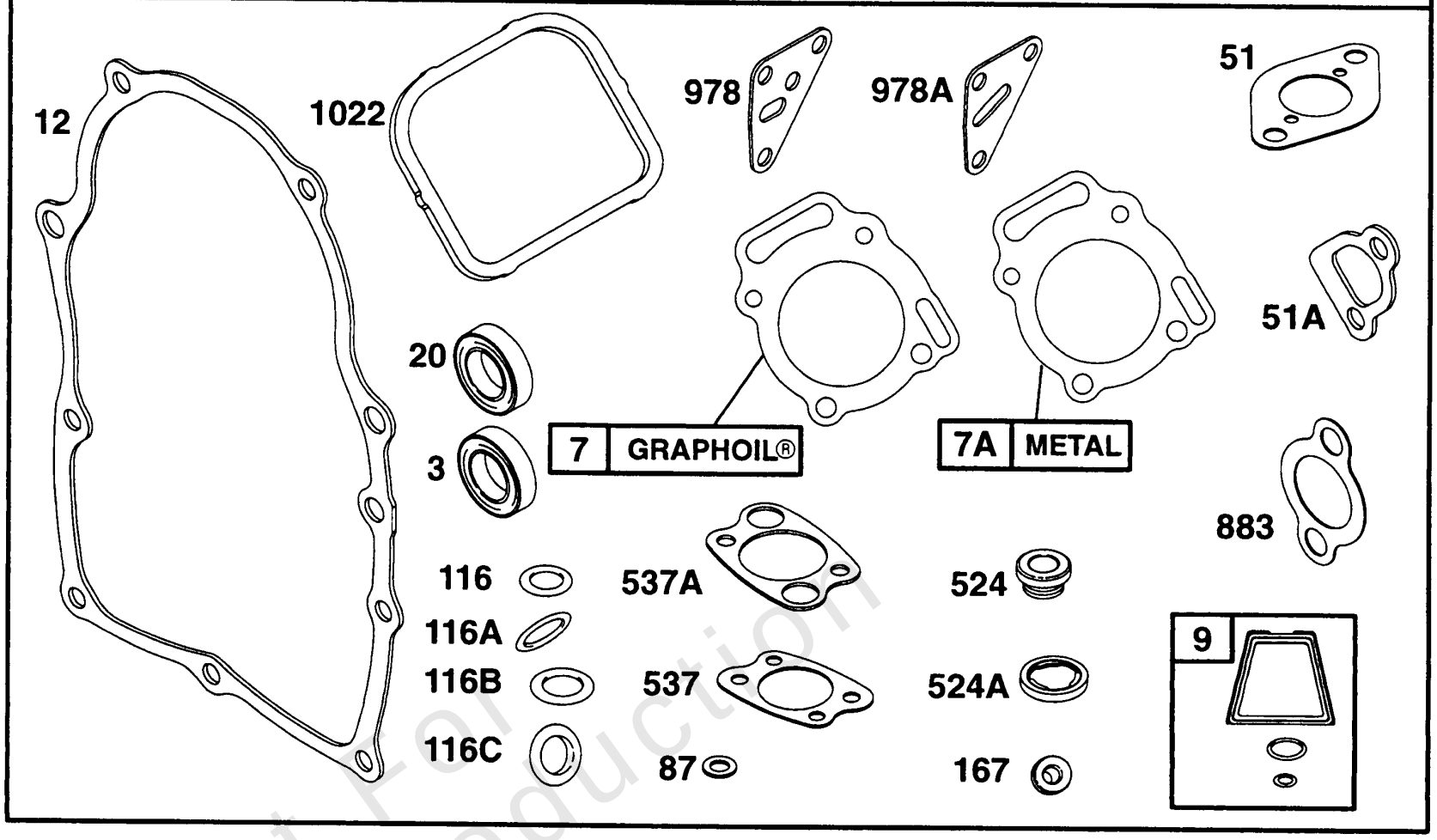

Not For Reproduction

Copyright © Briggs & Stratton. All Rights reserved

Gasket Sets

REF NO	PART NO	QTY	DESCRIPTION
1022	806039		GASKET, Rocker Cover -Included in Gasket Set-See Ref. 358. Included in Valve Overhaul Kit-See Ref. 1033

Not For Reproduction

Footnotes:

Included in Gasket Set-See Ref. 358
Included in Valve Overhaul Kit-See Ref. 1033
Included in Gasket Set-See Ref. 358. Included in Valve Overhaul Kit-See Ref. 1033

Copyright © Briggs & Stratton. All Rights reserved

Mfg. No: 290442-0454-01

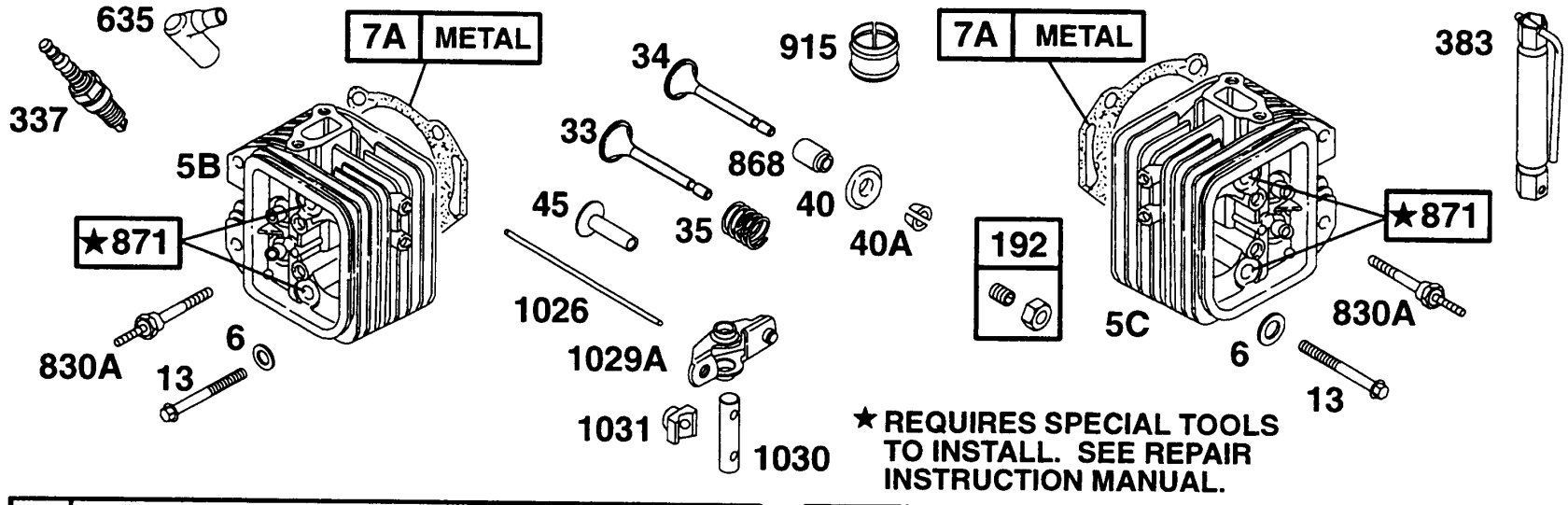

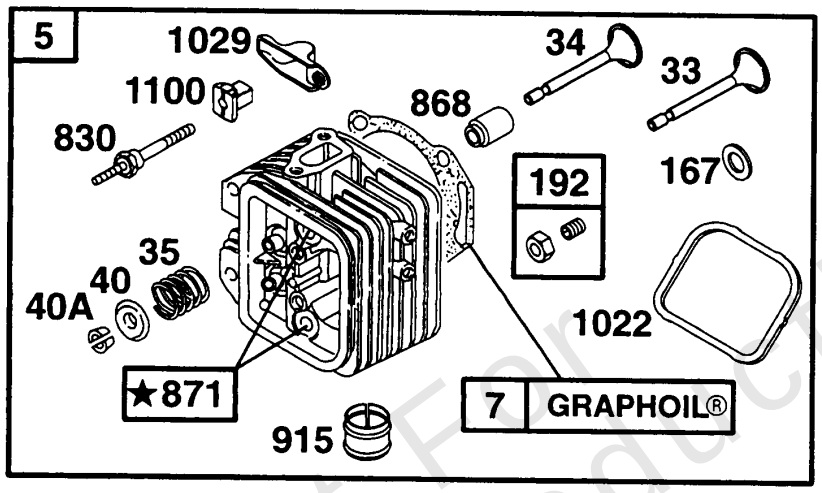

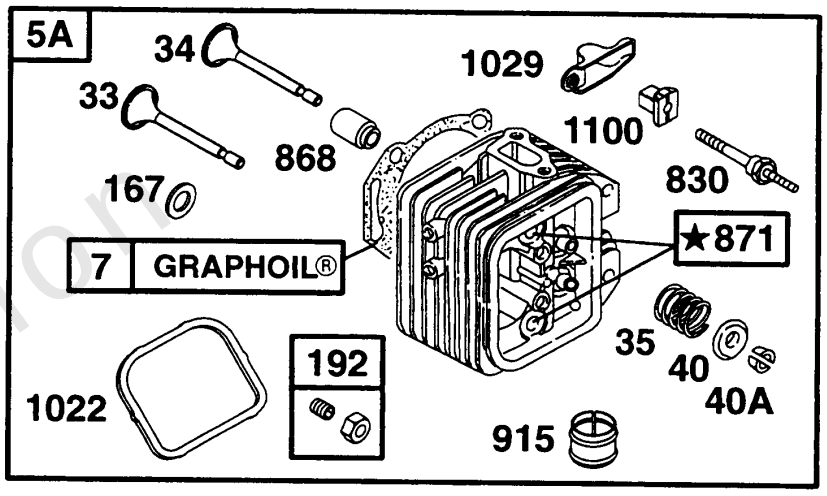

Not For Reproduction

Head Assys

REF NO	PART NO	QTY	DESCRIPTION
5B	807987		HEAD, Cylinder -(Cylinder 1) -Used Before Code Date 96040100
5A	808382		HEAD, Cylinder -(Cylinder 2)
5C	807988		HEAD, Cylinder -(Cylinder 2) -Used Before Code Date 96040100
5	808381		HEAD, Cylinder -(Cylinder 1)
6	805193		WASHER -Used Before Code Date 94050100
7A	807986		GASKET, Cylinder Head -Used Before Code Date 96040100
7	806085		GASKET, Cylinder Head -Included in Gasket Set-See Ref. 358. Included in Valve Overhaul Kit-See Ref. 1033
13	805097		SCREW -(86 Mm)
33	807681		VALVE, Exhaust
34	807680		VALVE, Intake
35	805078		SPRING, Valve -Used Before Code Date 94011800
35	805937		SPRING, Valve
40A	807683		KEEPER, Valve
40	805092		RETAINER, Valve
45	262679		TAPPET, Valve
167	805420		WASHER, Sealing -(Valve Cover) Included in Gasket Set-See Ref. 358. Included in Valve Overhaul Kit-See Ref. 1033
192	807623		ADJUSTER. Rocker Arm -(Valve Adjusting)
337	491055		PLUG, Spark -(Resistor)
383	19374		WRENCH, Spark Plug
635	805529		BOOT, Spark Plug
830A	805343		STUD, Rocker Arm -(Rocker Arm) -Used Before Code Date 96040100
830	806037		STUD, Rocker Arm -(Rocker Arm)
868	805094		SEAL, Valve
871	805084		BUSHING, Valve Guide
915	805083		LINER, Port
1022	806039		GASKET, Rocker Cover -Included in Gasket Set-See Ref. 358. Included in Valve Overhaul Kit-See Ref. 1033
1026	805352		ROD, Push -(Intake, Steel)
1026	805617		ROD, Push -(Exhaust) (Aluminum)
1029A	808096		ARM, Rocker -Used After Code Date 96011700
1029A	808159		ARM, Rocker -Used Before Code Date 94011800

Footnotes:

Included in Gasket Set-See Ref. 358
Included in Gasket Set-See Ref. 358. Included in Valve Overhaul Kit-See Ref. 1033
Included in Valve Overhaul Kit-See Ref. 1033

Not For Reproduction

Copyright © Briggs & Stratton. All Rights reserved

Mfg. No: 290442-0454-01

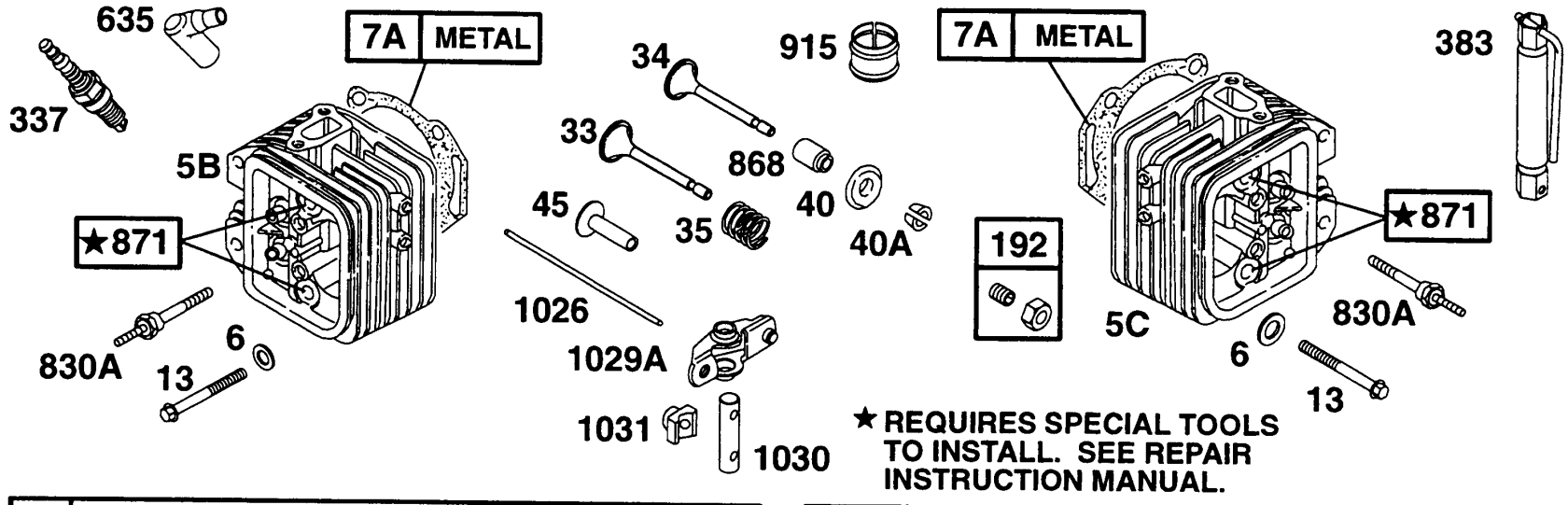

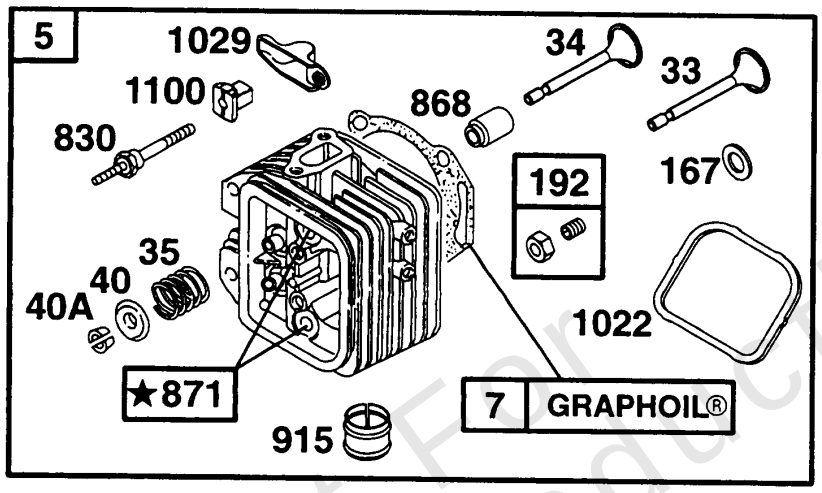

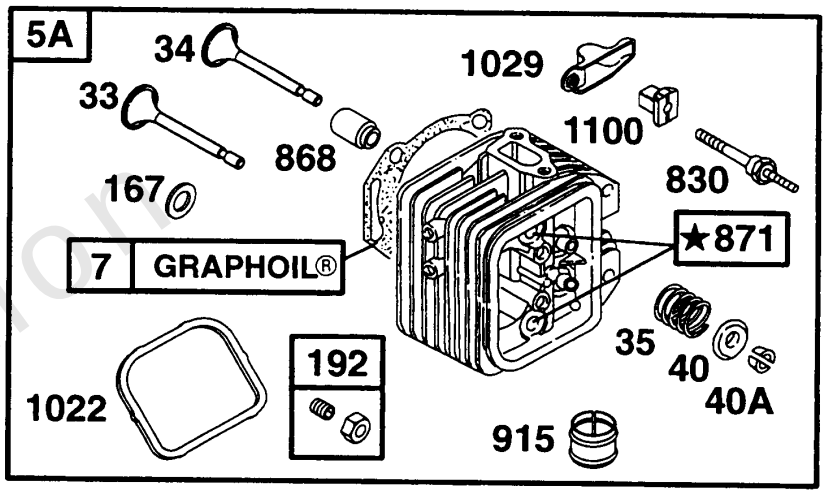

Not For Reproduction

Head Assys

REF NO	PART NO	QTY	DESCRIPTION
1029	806036		ARM, Rocker -Used After Code Date 96033100
1030	805342		SHAFT, Rocker Arm
1031	805341		SUPPORT, Rocker Arm
1100	806038		PIVOT, Rocker Arm

Not For Reproduction

Footnotes:

Included in Gasket Set-See Ref. 358
Included in Gasket Set-See Ref. 358. Included in Valve Overhaul Kit-See Ref. 1033
Included in Valve Overhaul Kit-See Ref. 1033

Copyright © Briggs & Stratton. All Rights reserved

Mfg. No: 290442-0454-01

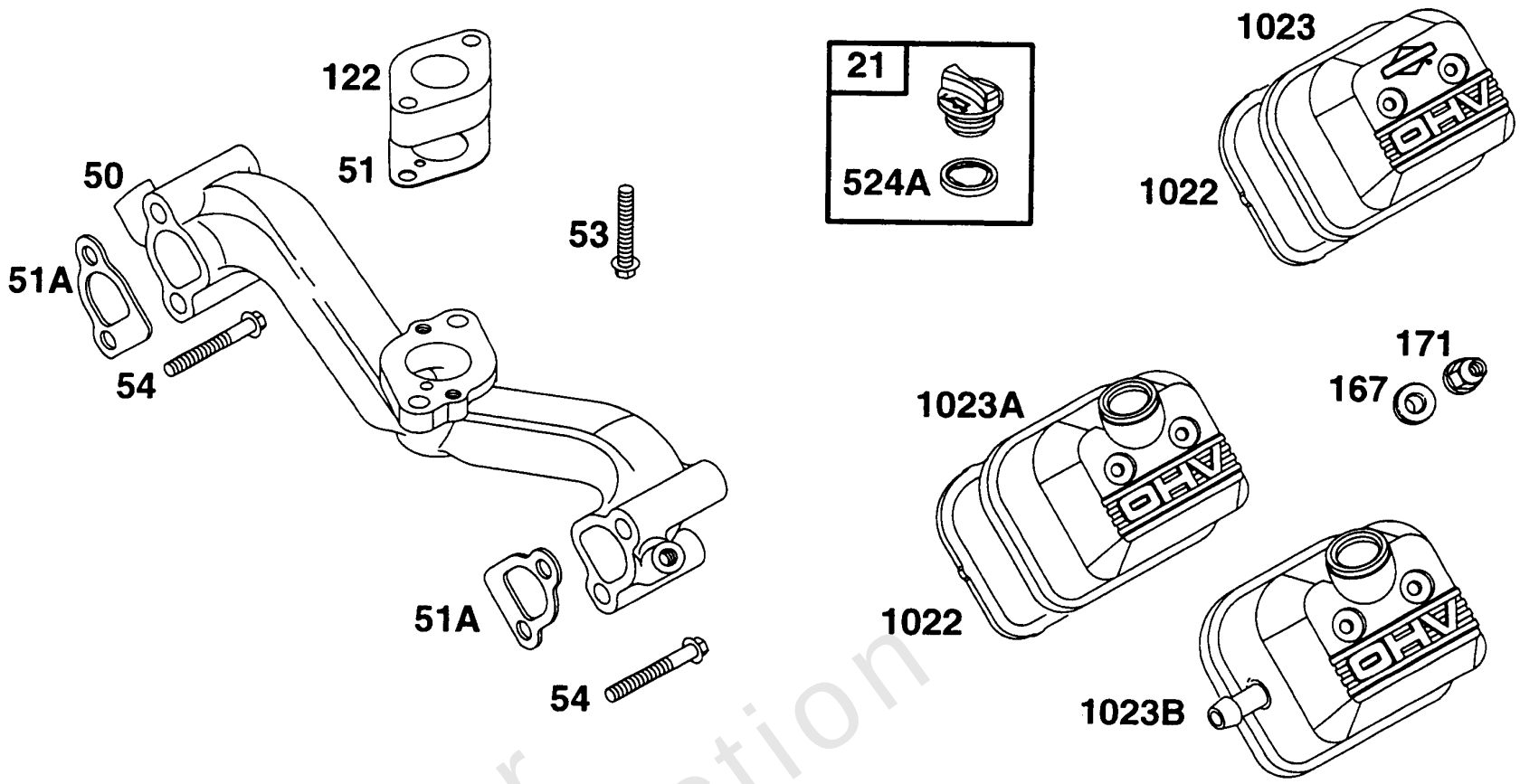

Not For Reproduction

Copyright © Briggs & Stratton. All Rights reserved

Manifold, Rocker Covers

REF NO	PART NO	QTY	DESCRIPTION
21	491832		PLUG, Oil
50	805409		MANIFOLD, Intake -Used Before Code Date 92050100
50	805772		MANIFOLD, Intake
51A	805023		GASKET, Intake -(Manifold) Included in Gasket Set-See Ref. 358. Included in Valve Overhaul Kit-See Ref. 1033
51	805700		GASKET, Intake -Included in Gasket Set-See Ref. 358
53	805466		SCREW -(Carburetor To Manifold)
54	805006		SCREW -(Intake Manifold)
122	805328		SPACER, Carburetor
167	805420		WASHER, Sealing -(Valve Cover) Included in Gasket Set-See Ref. 358. Included in Valve Overhaul Kit-See Ref. 1033
171	805019		NUT -(Rocker Cover) Included in Valve Overhaul Kit-See Ref. 1033
524A	271983		SEAL, O-Ring -(Dipstick Tube) Included in Gasket Set-See Ref. 358. Included in Valve Overhaul Kit-See Ref. 1033
1022	806039		GASKET, Rocker Cover -Included in Gasket Set-See Ref. 358. Included in Valve Overhaul Kit-See Ref. 1033
1023A	805842		COVER, Rocker
1023B	808032		COVER, Valve -(Cylinder 1) (Fuel Pump)
1023	805100		COVER, Rocker
1023	807665		COVER, Valve -(Cylinder 1) (Fuel Pump)

Not For Reproduction

Footnotes:

Included in Carburetor Kit-See Ref. 121
Included in Gasket Set-See Ref. 358

Copyright © Briggs & Stratton. All Rights reserved

Muffler Grp, Manifolds

Mfg. No: 290442-0454-01

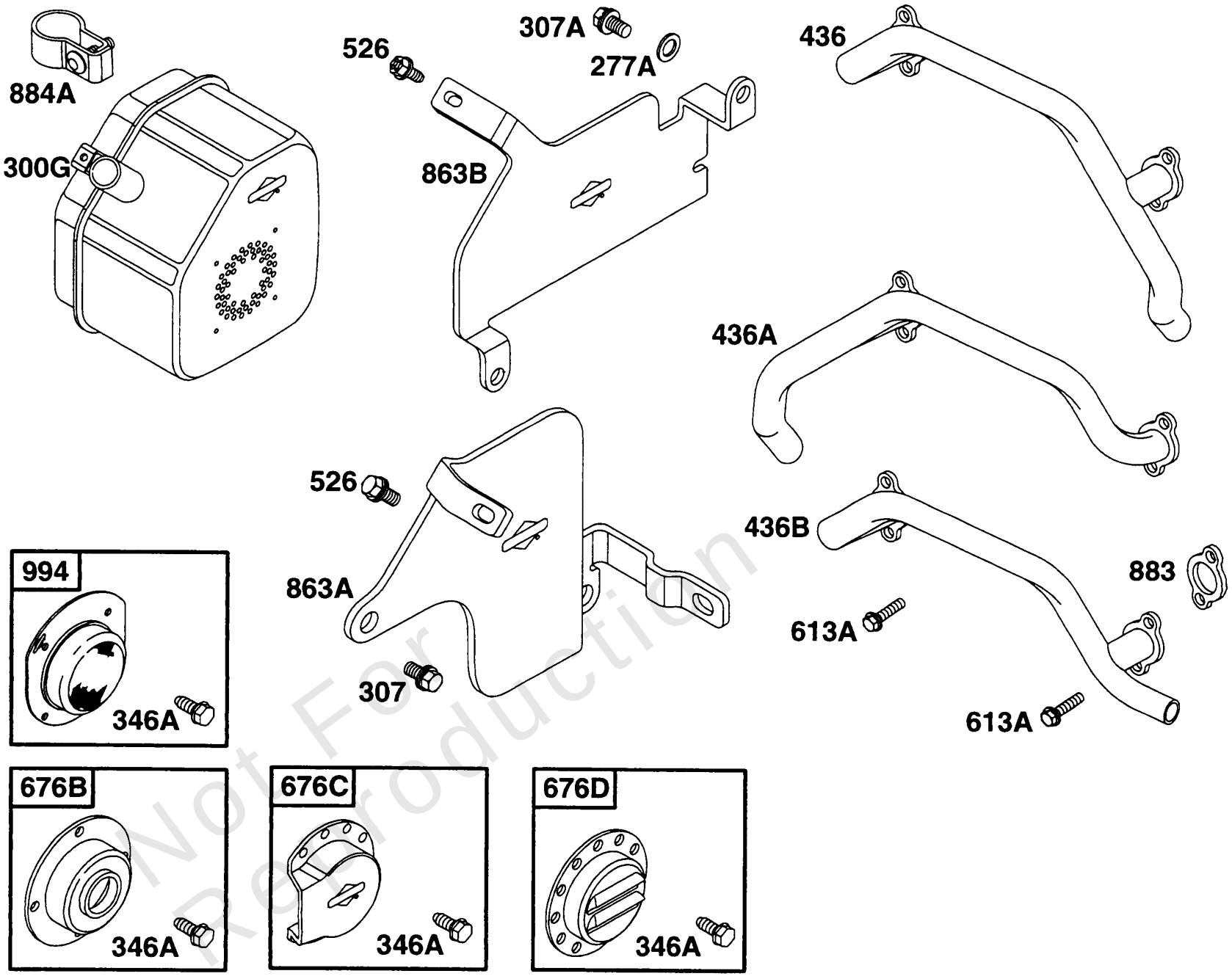

Not For Reproduction

Muffler Grp, Manifolds

REF NO	PART NO	QTY	DESCRIPTION
277A	810108		WASHER
300G	807948		MUFFLER
307A	810107		SCREW
307	805025		SCREW
307	805247		SCREW -Engines With Fuel Tanks
346A	93705		SCREW -(8-32 X 3/8)
436B	805403		MANIFOLD, Exhaust -(Muffler Supplied By Customer)
436A	805378		MANIFOLD, Exhaust
436	805142		MANIFOLD, Exhaust
526	805448		SCREW -(Regulator)
613A	805158		SCREW -(Exhaust Manifold)
676D	397630		DEFLECTOR, Muffler -(Louvered Outlet)
676B	396903		DEFLECTOR, Muffler
676C	393761		DEFLECTOR, Muffler -(Side Outlet)
863A	805812		BRACKET, Muffler
863B	805811		BRACKET, Muffler
883	805024		GASKET, Exhaust -Included in Gasket Set-See Ref. 358. Included in Valve Overhaul Kit-See Ref. 1033
884A	392649		CLAMP, Muffler -(Muffler 493963)
994	392390		ARRESTOR, Spark

Not For Reproduction

Footnotes:

(Use W/Cntrl Lever &/or Wire W/L-Formed End)

Copyright © Briggs & Stratton. All Rights reserved

Mfg. No: 290442-0454-01

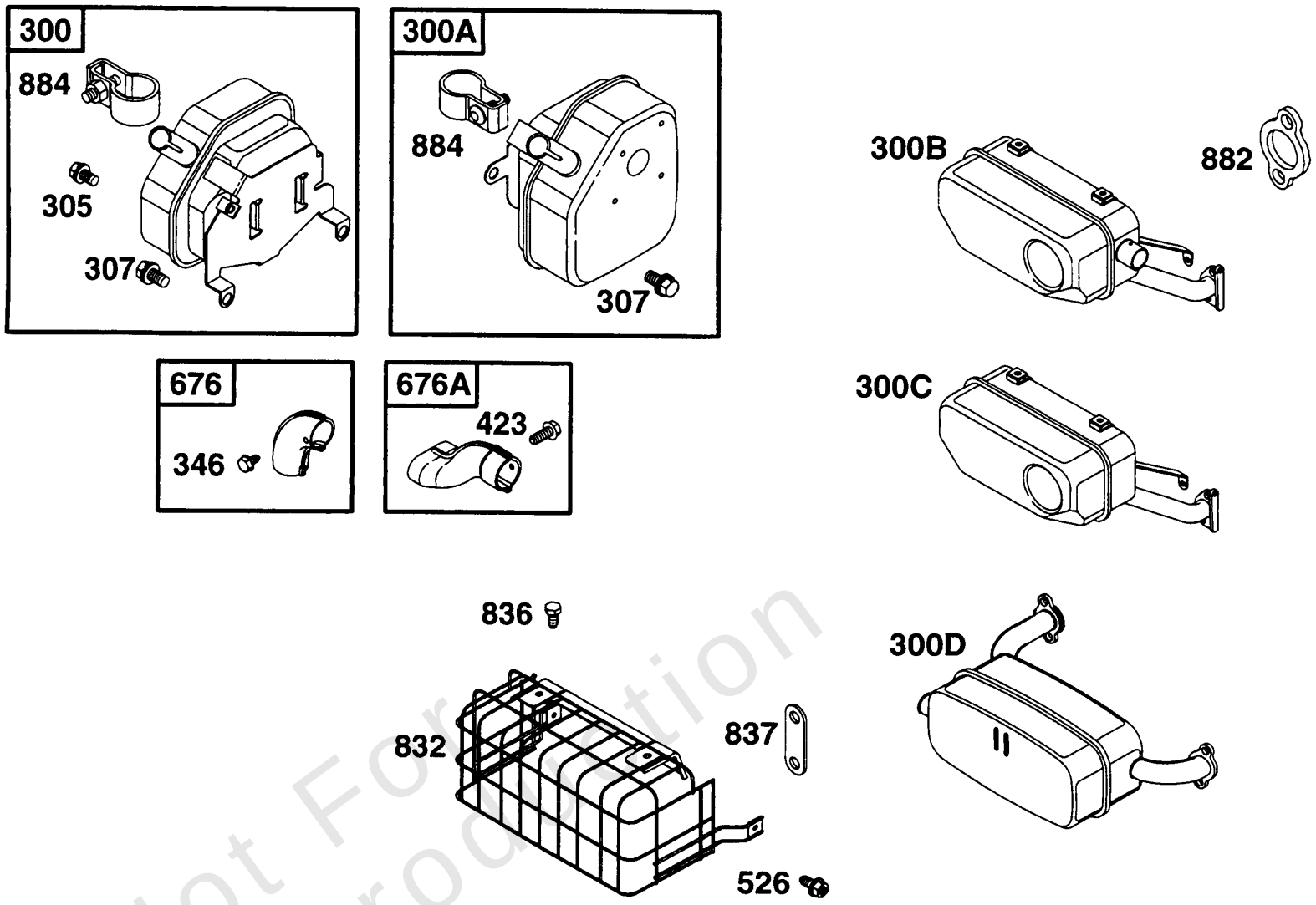

Not For Reproduction

Muffler Grps

REF NO	PART NO	QTY	DESCRIPTION
300D	808340		MUFFLER
300A	807742		MUFFLER -(Used With Manifold Part No. 805142)
300C	807964		MUFFLER -(Cyl. #1 Side Outlet, Starter Motor Side)
300B	807965		MUFFLER -(Cyl. #2 Side Outlet, Oil Filter Side)
300	807741		MUFFLER -(Manifold 805378)
305	805406		SCREW
307	805025		SCREW
307	805247		SCREW -Engines With Fuel Tanks
346	810079		SCREW
423	805260		SCREW -(Starter Gear Cover)
526	805448		SCREW -(Regulator)
676A	808393		DEFLECTOR, Muffler
676	495518		DEFLECTOR, Muffler
832	808009		GUARD, Muffler -Used Before Code Date 96042400
832	808227		GUARD, Muffler
836	805849		SCREW
837	808085		SPACER, Muffler -(Includes 2)
882	805502		FLANGE, Exhaust
884	807595		CLAMP, Muffler

Not For Reproduction

Mfg. No: 290442-0454-01

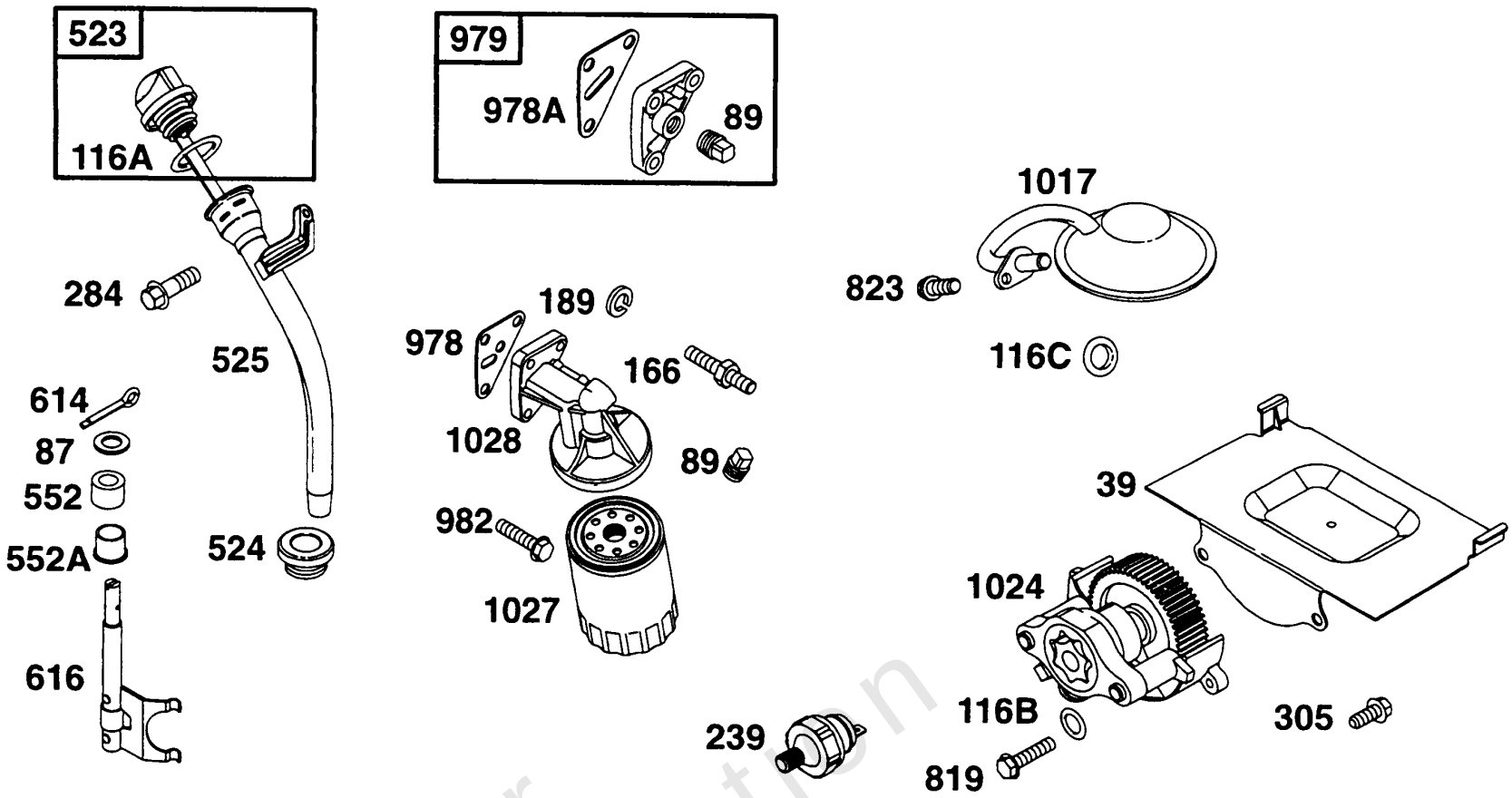

Not For Reproduction

Copyright © Briggs & Stratton. All Rights reserved

Oil Grp

REF NO	PART NO	QTY	DESCRIPTION
39	805300		DEFLECTOR, Oil
87	805054		SEAL, Governor Shaft -Included in Gasket Set-See Ref. 358
89	805059		PLUG, Oil Drain
116B	805058		SEAL, O-Ring -(Oil Pump) Included in Gasket Set-See Ref. 358
116A	805386		SEAL, O-Ring -Included in Gasket Set-See Ref. 358
116C	805316		SEAL, O-Ring -(Pick-up Tube) Included in Gasket Set-See Ref. 358
166	805073		STUD -(Oil Filter Adapter)
189	805449		WASHER -(Oil Filter Adapter)
239	491657		SWITCH, Oil Pressure
284	805177		SCREW
305	805406		SCREW
523	807977		DIPSTICK
524	281370		SEAL, O-Ring -Included in Gasket Set-See Ref. 358
525	807584		TUBE, Dipstick
552A	805413		BUSHING, Governor Crank
552	805412		BUSHING, Governor Crank
614	805417		RETAINER, Governor Shaft
616	807596		CRANK, Governor
819	805057		SCREW -(Oil Pump)
823	805317		SCREW
978A	805229		GASKET, Oil Adapter -Included in Gasket Set-See Ref. 358
978	805250		GASKET, Oil Adapter -(Oil Filter Adapter) Included in Gasket Set-See Ref. 358
979	807689		COVER, Oil Filter
982	805030		SCREW
1017	807598		SCREEN, Oil Pump
1024	807644		PUMP, Oil
1027	491056		FILTER-OIL -(3-1/4) -Used Before Code Date 95020600
1027	492932		FILTER, Oil -(2 1/4)
1028	808033		ADAPTER, Oil Filter
1028	808235		ADAPTER, Oil Filter

Not For Reproduction

Footnotes:

(Use W/Cntrl Lever &/or Wire W/L-Formed End)

Copyright © Briggs & Stratton. All Rights reserved

Mfg. No: 290442-0454-01

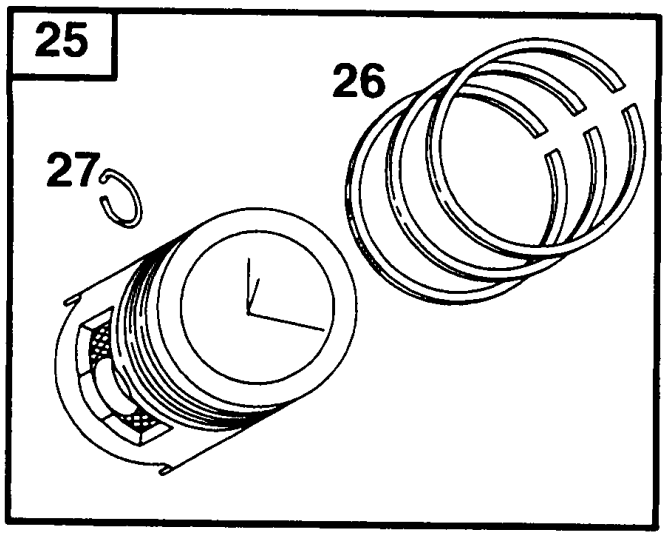

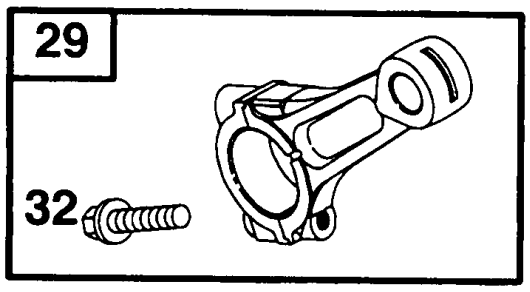

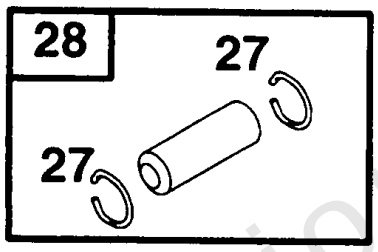

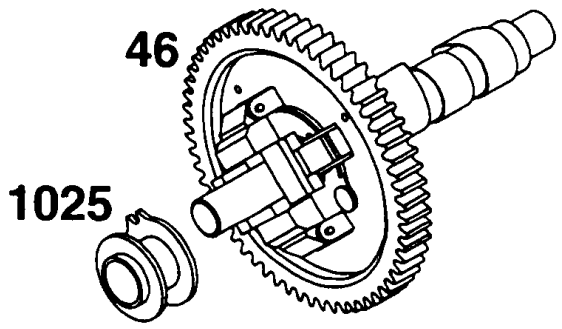

Not For Reproduction

Copyright © Briggs & Stratton. All Rights reserved

Piston Grp, Cam

REF NO	PART NO	QTY	DESCRIPTION
25	807619		PISTON ASSEMBLY -(Standard)
25	807807		PISTON ASSEMBLY -(.010 Oversize)
25	807809		PISTON ASSEMBLY -(.020)
25	807811		PISTON ASSEMBLY -(.030 Oversize)
26	807620		SET, Ring -(Standard)
26	807808		SET, Ring -(.010 Oversize)
26	807810		SET, Ring -(.020 Oversize)
26	807812		SET, Ring -(.030 Oversize)
27	805099		LOCK, Piston Pin
28	807621		PIN, Piston -(Standard)
29	807803		ROD, Connecting -(.020 Undersize)
29	807900		ROD, Connecting -(Standard)
32	805395		SCREW
46	807542		CAMSHAFT
1025	805313		SPOOL, Governor

Not For Reproduction

Copyright © Briggs & Stratton. All Rights reserved

Replacement Engine - US & Canada

REF NO	PART NO	QTY	DESCRIPTION
	3054420527	1	Replacement Engine
	494054	1	Replacement Short Block
	-----		Top No-Load Speed: 3600 -Trim: 01
	-----		Service Note: For all Go-Karts use only a Model 136200 series engine as a replacement, regardless of the original Model.
	-----		Service Note: Transfer the Muffler and/or Spark Arrester Assembly from the original engine if suitable for additional service, or add new parts as required. In some cases it maybe necessary to transfer the Oil Filter Adapter to the replacement engine.
	-----		Service Note: Transfer Blower Housing, Flywheel and Booster Fan Group to replacement engine. Transfer Electric Starter if original Flywheel is equipped with an aluminum ring gear .
	-----		Service Note: Transfer Exhaust Ducting and/or Muffler Assembly from original engine to replacement engine.

Not For Reproduction

Copyright © Briggs & Stratton. All Rights reserved

Mfg. No: 290442-0454-01

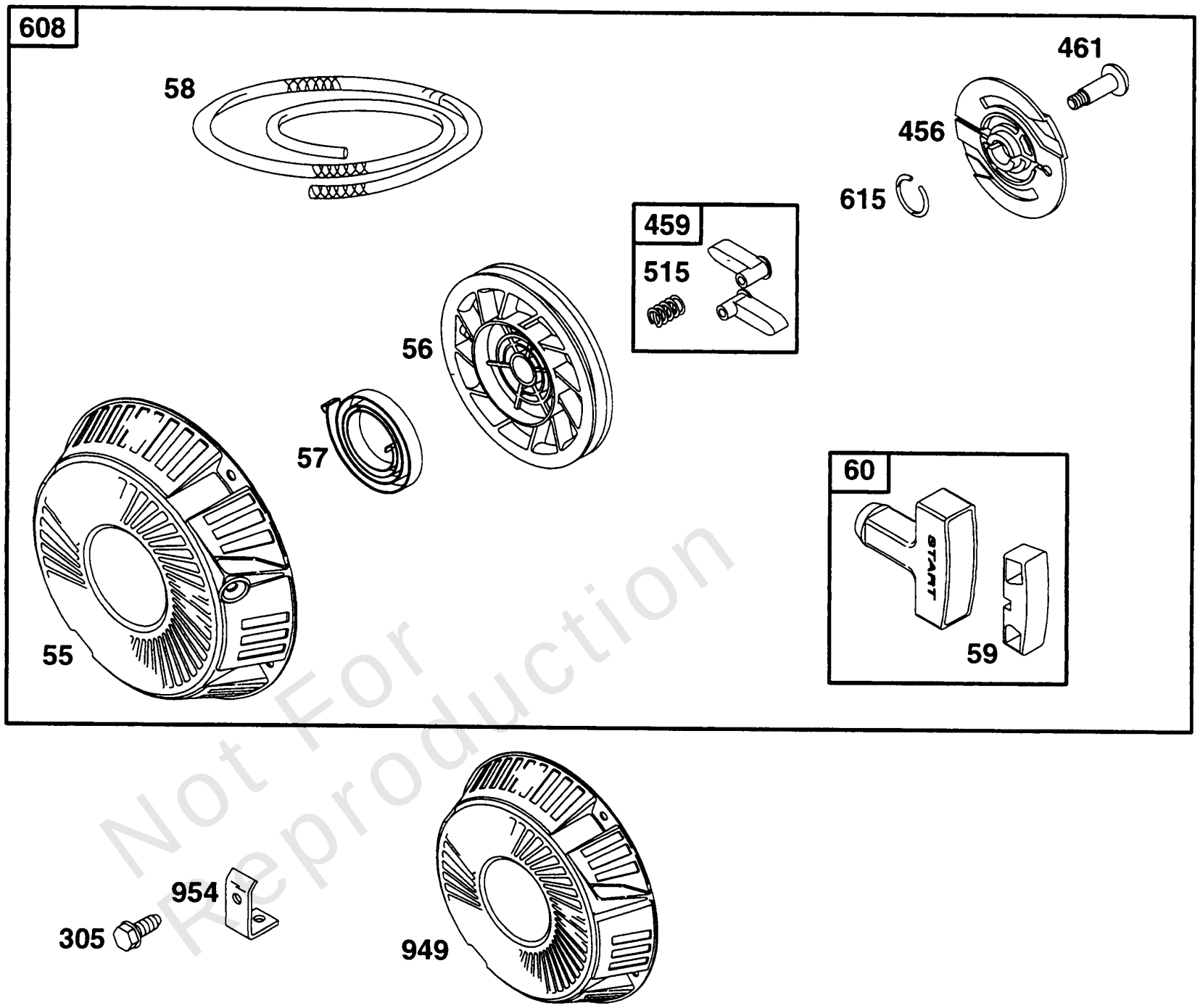

Not For Reproduction

Copyright © Briggs & Stratton. All Rights reserved

Rewind Starter Assy

REF NO	PART NO	QTY	DESCRIPTION
55	808186		HOUSING, Rewind Starter
56	805949		PULLEY, Rope Starter
57	805951		SPRING, Rewind Starter
58	66574		ROPE, Starter -(99 Long, Cut to Required Length)
59	805957		INSERT, Grip
60	808167		GRIP, Starter Rope
305	805406		SCREW
456	805954		RETAINER, Seal
459	808166		PAWL, Ratchet
461	805955		SCREW
515	805953		SPRING, Pawl
608	808087		STARTER, Rewind -Used After Code Date 93072500
615	805952		RETAINER
954	805430		BRACKET, Mounting

Not For Reproduction

Mfg. No: 290442-0454-01

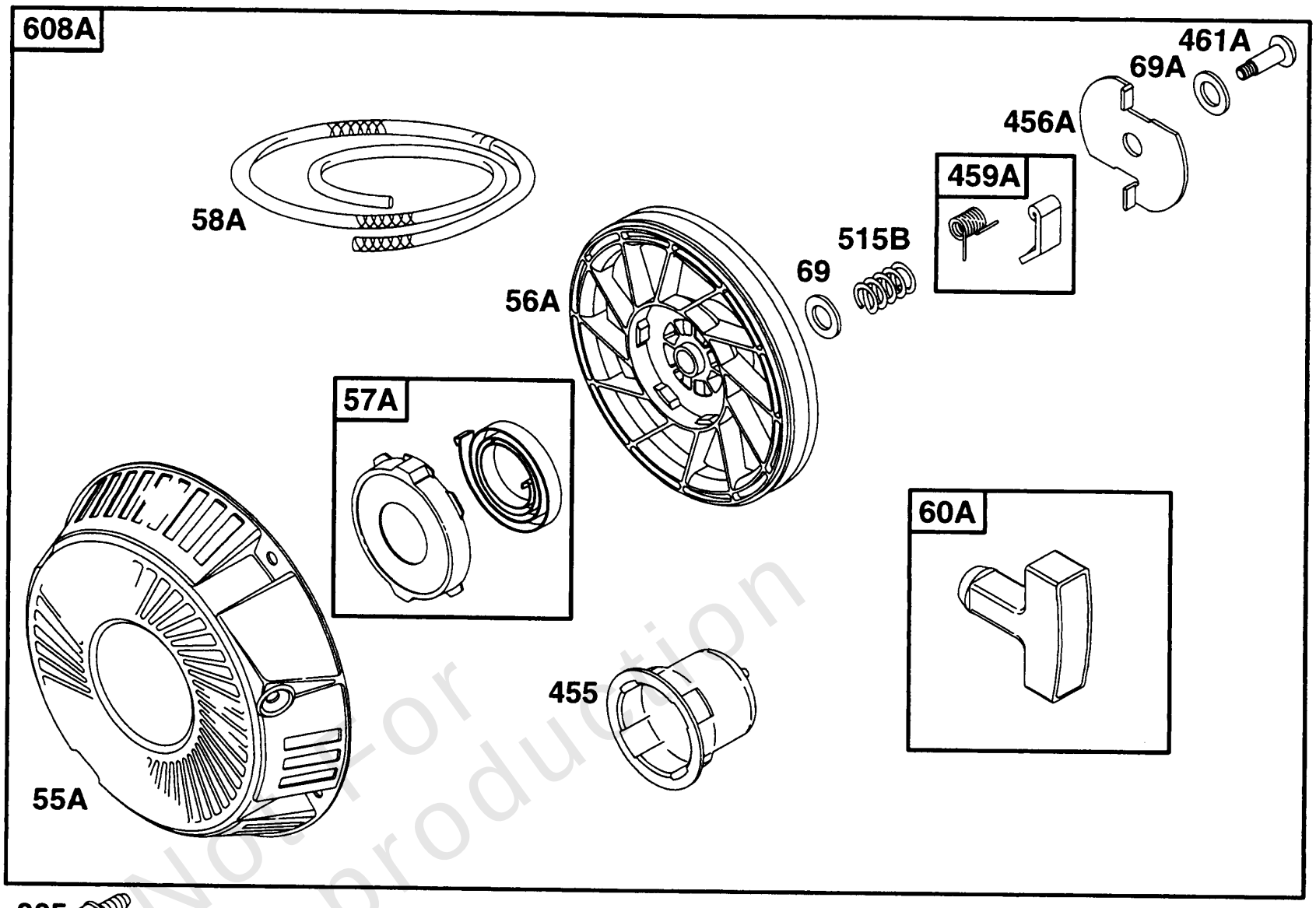

305

Not For Reproduction

Copyright © Briggs & Stratton. All Rights reserved

Rewind Starter Assy

REF NO	PART NO	QTY	DESCRIPTION
55A	492193		HOUSING, Rewind Starter
56A	280918		PULLEY, Rope Starter
57A	492194		SPRING, Rewind Starter
58A	66894		ROPE, Starter -(Cut To Required Length)
60A	490652		GRIP-STARTER ROPE
69A	94462		WASHER
69	94464		WASHER -(Pulley)
305	805406		SCREW
455	805153		CUP, Flywheel -Used Before Code Date 93072600
455	805876		CUP, Flywheel
456A	224228		PLATE, Pawl Friction
459A	492431		PAWL, Ratchet
461A	94463		SCREW
515B	262564		SPRING, Friction
608A	808152		STARTER, Rewind -Used Before Code Date 93072600

Not For Reproduction

1033 VALVE OVERHAUL KIT

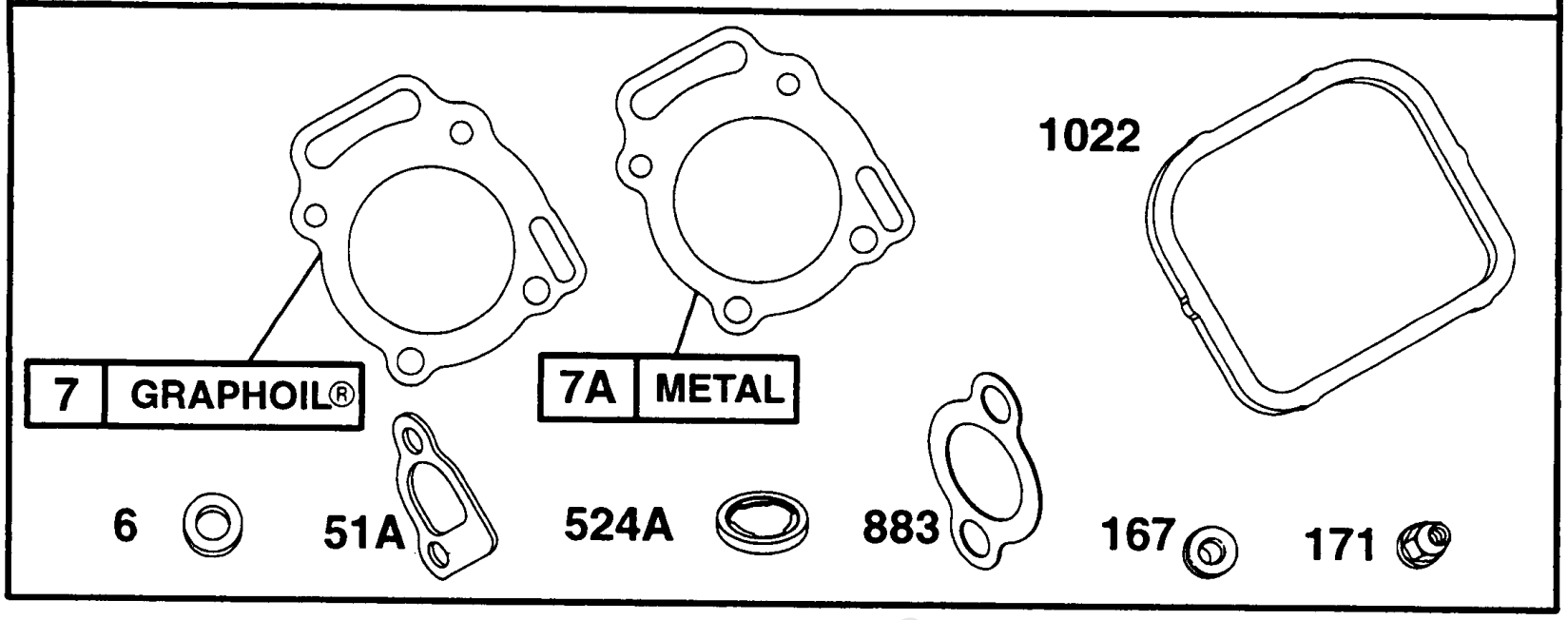

121 CARBURETOR KIT

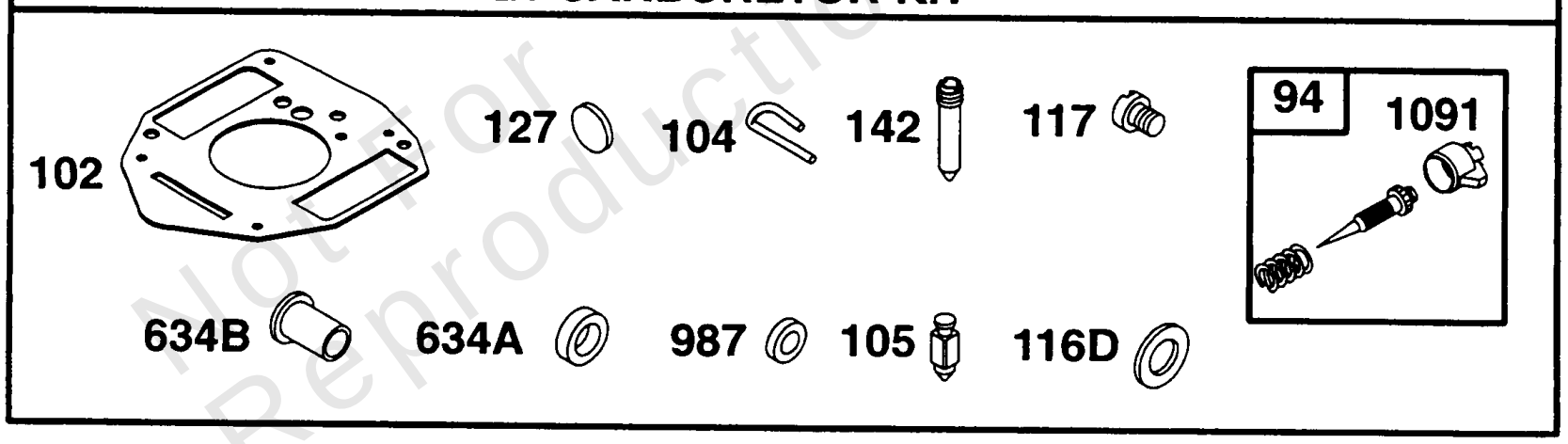

Not for Reproduction

Valve Kit, Carb Kits

REF NO	PART NO	QTY	DESCRIPTION
6	805193		WASHER -Used Before Code Date 94050100
7A	807986		GASKET, Cylinder Head -Used Before Code Date 96040100
7	806085		GASKET, Cylinder Head -Included in Gasket Set-See Ref. 358. Included in Valve Overhaul Kit-See Ref. 1033
51A	805023		GASKET, Intake -(Manifold) Included in Gasket Set-See Ref. 358. Included in Valve Overhaul Kit-See Ref. 1033
94	807719		VALVE, Idle Mixture -Used Before Code Date 95010100
94	808257		VALVE, Idle Mixture -Included in Carburetor Kit-See Ref. 121
102	805541		GASKET, Carburetor Body -Included in Carburetor Kit-See Ref. 121
104	805545		PIN, Float Hinge -Included in Carburetor Kit-See Ref. 121
105	805547		VALVE, Float Needle -(Pump Feed) Included in Carburetor Kit-See Ref. 121
105	805620		VALVE, Float Needle -(Gravity Feed) Included in Carburetor Kit-See Ref. 121
116D	805549		WASHER, Sealing -Included in Carburetor Kit-See Ref. 121
117	805624		JET, Main -Used Before Code Date 95010100
117	805625		JET, Main -(High Altitude) -Used After Code Date 89111700
117	805852		JET, Main -Used After Code Date 94123100
121	807850		CARBURETOR
127	805559		PLUG, Welch -Included in Carburetor Kit-See Ref. 121
142	805553		NOZZLE, Carburetor -Included in Carburetor Kit-See Ref. 121
167	805420		WASHER, Sealing -(Valve Cover) Included in Gasket Set-See Ref. 358. Included in Valve Overhaul Kit-See Ref. 1033
171	805019		NUT -(Rocker Cover) Included in Valve Overhaul Kit-See Ref. 1033
524A	271983		SEAL, O-Ring -(Dipstick Tube) Included in Gasket Set-See Ref. 358. Included in Valve Overhaul Kit-See Ref. 1033
634B	805543		BUSHING, Choke Shaft -Included in Carburetor Kit-See Ref. 121
634A	805557		SPACER -Included in Carburetor Kit-See Ref. 121
883	805024		GASKET, Exhaust -Included in Gasket Set-See Ref. 358. Included in Valve Overhaul Kit-See Ref. 1033
987	805544		SEAL, Choke/Throttle Shaft -Included in Carburetor Kit-See Ref. 121

Not For Reproduction

Footnotes:

Included in Carburetor Kit-See Ref. 121
Included in Gasket Set-See Ref. 358. Included in Valve Overhaul Kit-See Ref. 1033
Included in Valve Overhaul Kit-See Ref. 1033

Copyright © Briggs & Stratton. All Rights reserved

1033 VALVE OVERHAUL KIT

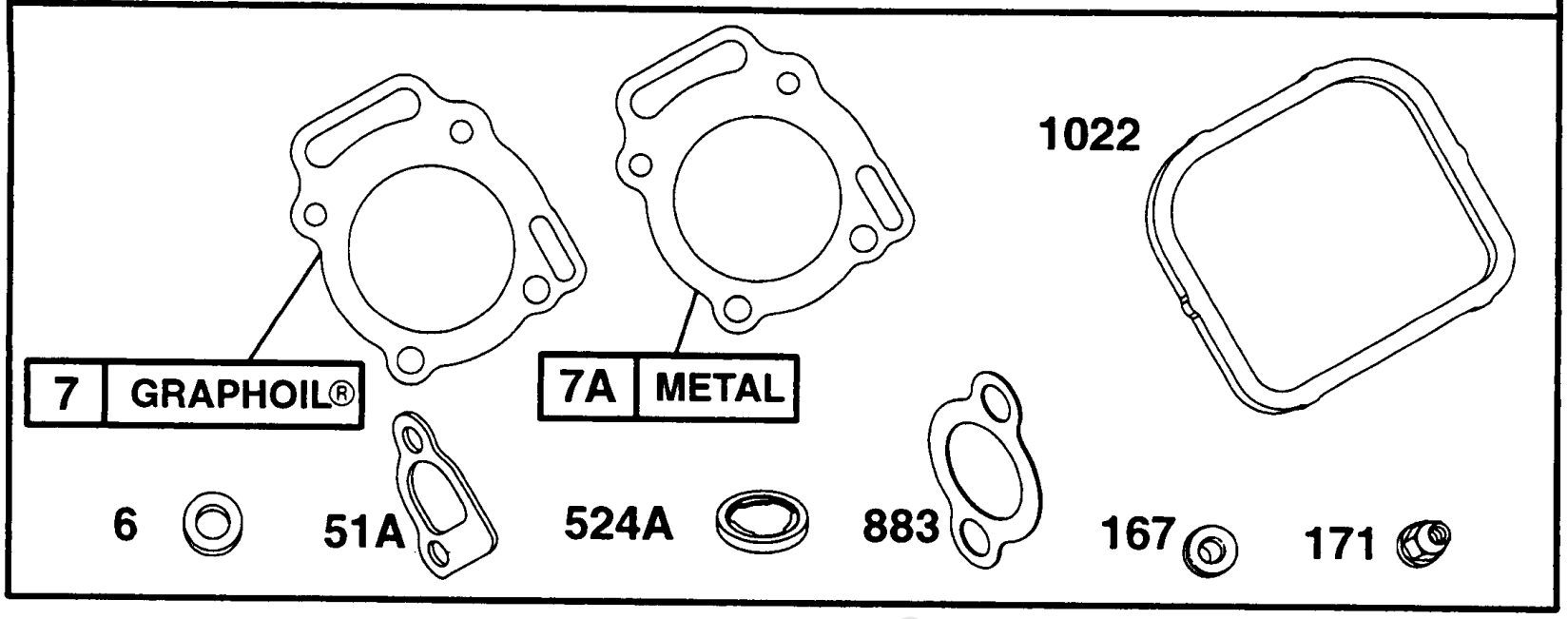

121 CARBURETOR KIT

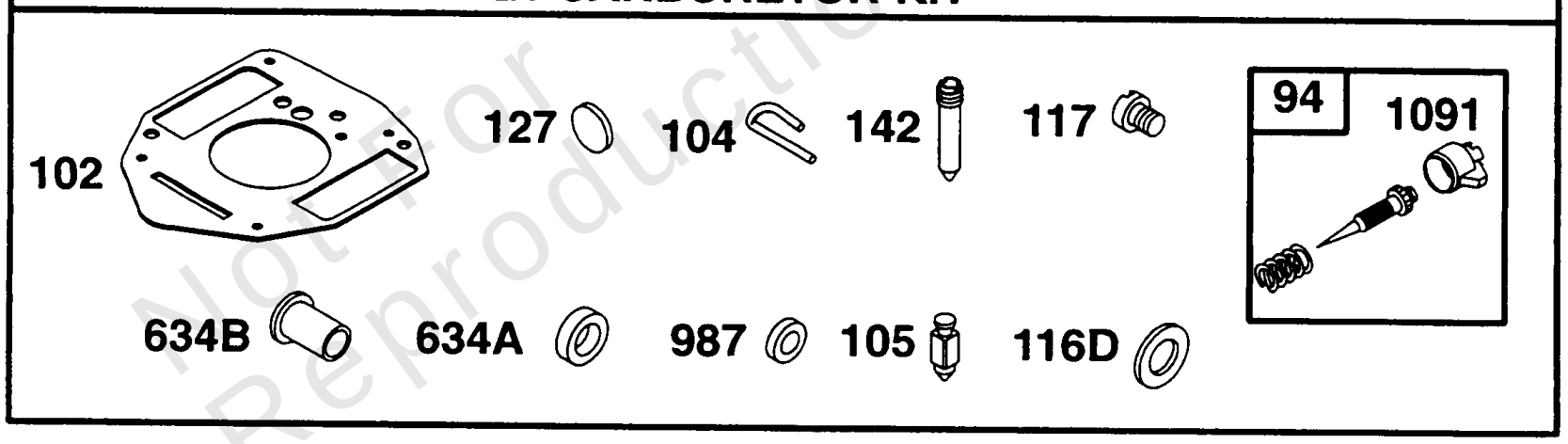

Not for Reproduction

Valve Kit, Carb Kits

REF NO	PART NO	QTY	DESCRIPTION
1022	806039		GASKET, Rocker Cover -Included in Gasket Set-See Ref. 358. Included in Valve Overhaul Kit-See Ref. 1033
1033	807990		GASKET SET, Valve -Used Before Code Date 96040100
1033	808392		GASKET SET, Valve
1091	805862		CAP, Limiter -Included in Carburetor Kit-See Ref. 121

Not For Reproduction

Footnotes:

Included in Carburetor Kit-See Ref. 121
Included in Gasket Set-See Ref. 358. Included in Valve Overhaul Kit-See Ref. 1033
Included in Valve Overhaul Kit-See Ref. 1033

Copyright © Briggs & Stratton. All Rights reserved

Model 29, 30, 35 & 38 Engine Accessories Catalog

Not For Reproduction

Copyright © Briggs & Stratton. All Rights reserved

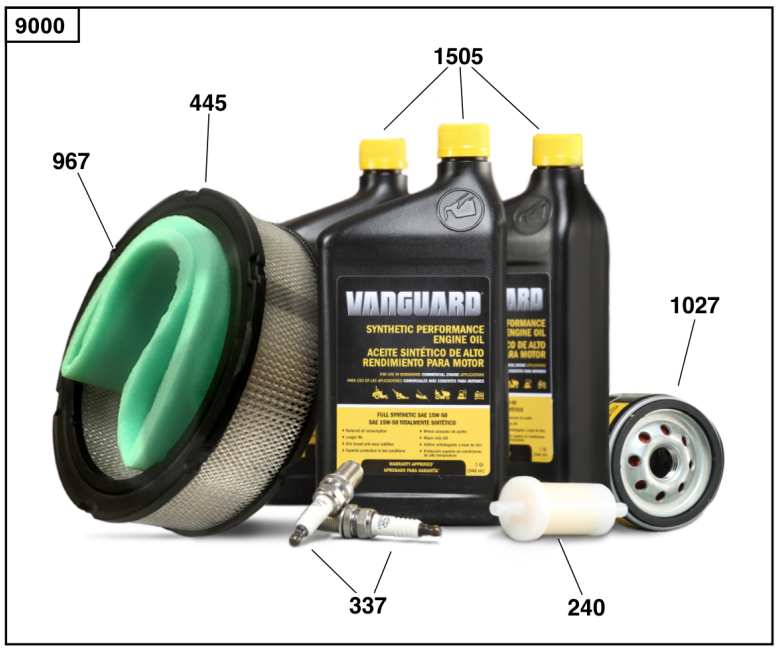

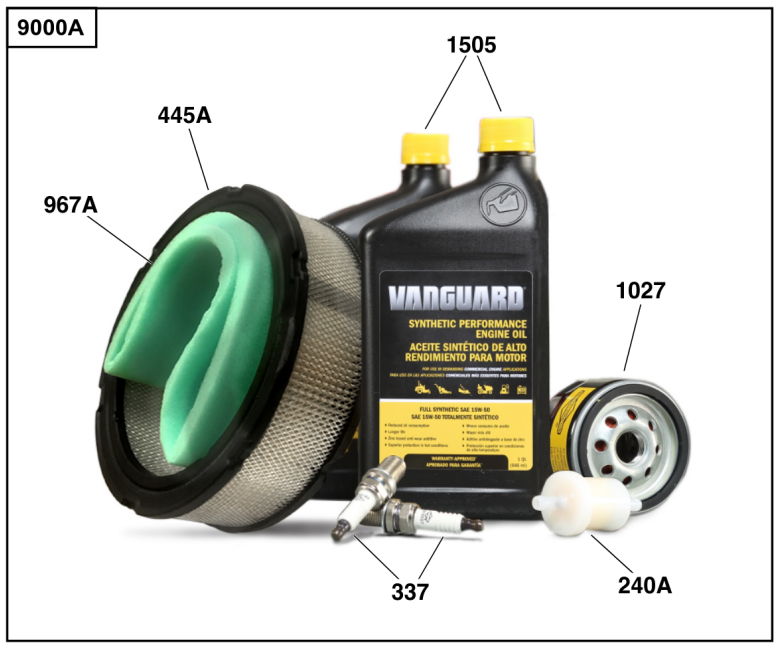

Not For Reproduction

Maintenance Kits

REF NO	PART NO	QTY	DESCRIPTION
9000	84004936		KIT, Maintenance -(Non-Oil Guard™ Engines) (20 - 23 HP)
9000A	84004937		KIT, Maintenance -(Non-Oil Guard™ Engines) (12.5 - 18 HP)
9000B	84002315		KIT, Maintenance -(Non-Oil Guard™ Engines)
240	845125	1	FILTER, Fuel
240A	84001895	1	FILTER, Fuel
337	491055S	2	PLUG, Spark
337	84007216	2	PLUG, Spark -(China Only)
445	692519	1	FILTER, A/C Cartridge -"Professional / PXi" & "Commercial / CXi".
445A	394018S	1	FILTER, A/C Cartridge -"Professional / PXi" & "Commercial / CXi".
445B	841497	1	FILTER, A/C Cartridge -"Professional / PXi" & "Commercial / CXi".
967	692520	1	FILTER, Pre Cleaner
967A	272490S	1	FILTER, Pre Cleaner
1027	842921	1	FILTER, Oil -(Vanguard®)
1505	100169		OIL-1QT VANGUARD (CASE) -(1 qt. Bottle)

Not For Reproduction

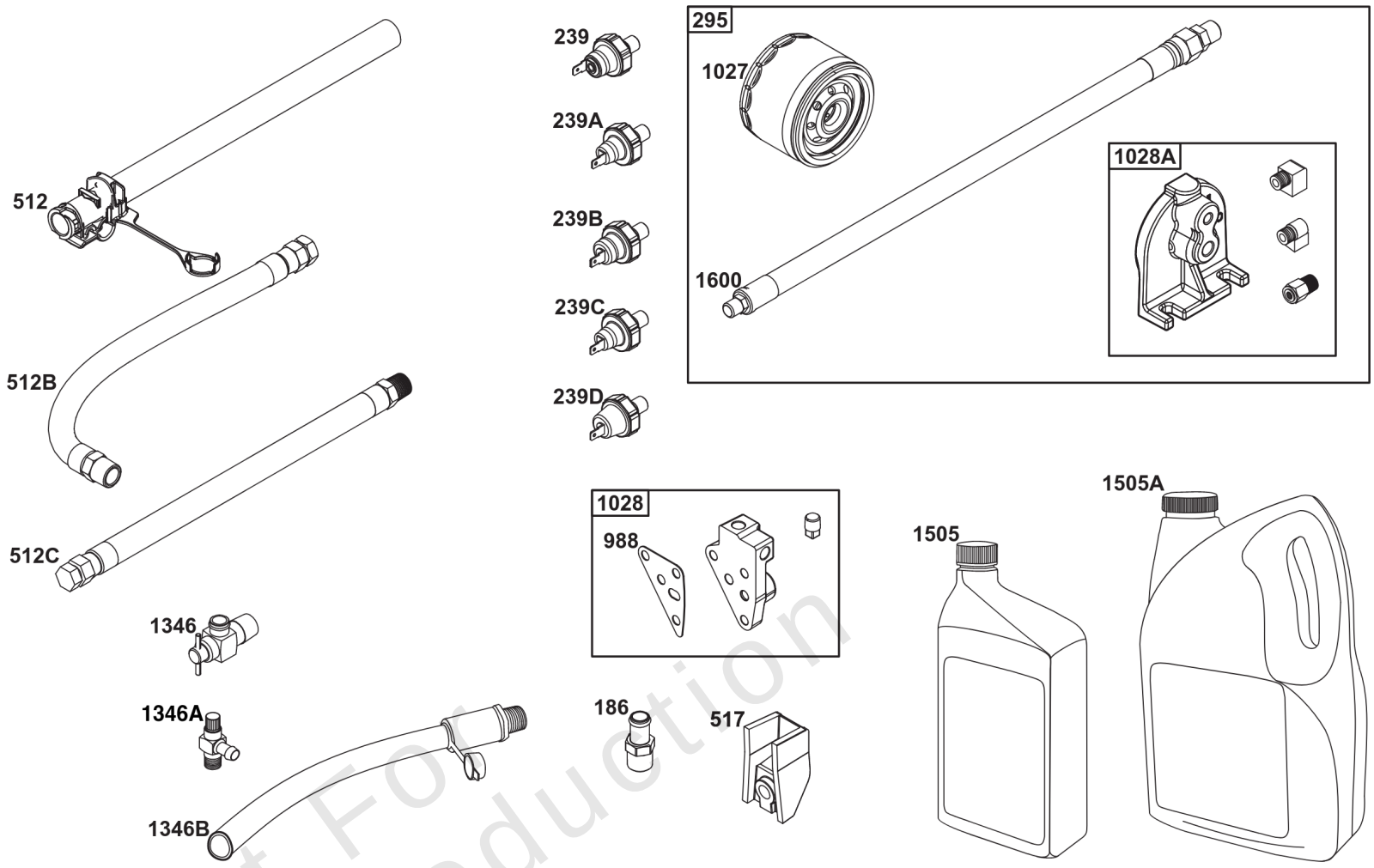

Not For Reproduction

REF NO	PART NO	QTY	DESCRIPTION
186	796532	1	CONNECTOR, Hose -(Threaded Engine Block Connector for EZ-Oil Drain Hose)(Order hose separate)
239	690233	1	SWITCH, Oil Pressure -(2-4 PSI Normally-Closed Switch)
239A	491657S	1	SWITCH, Oil Pressure -(3-5 PSI Normally-Closed Switch)
239B	841281	1	SWITCH, Oil Pressure -(7-10 PSI Normally-Closed Switch)
239C	694115	1	SWITCH, Oil Pressure -(9-13 PSI Normally-Closed Switch)
239D	697049	1	SWITCH, Oil Pressure -(3-6 PSI Normally-Open Switch)
295	492061	1	ADAPTER, Remote Oil Filter -(Remote oil filter head with 18" (48 cm) hoses)
295	492062	1	ADAPTER, Remote Oil Filter -(Remote oil filter head with 30" (76 cm) hoses)
512	594200	1	HOSE, Oil Drain -(EZ-Oil Drain Hose, 10.5")(Order threaded engine block connector separate)
512	593635	1	HOSE, Oil Drain -(EZ-Oil Drain Hose, 13.75")(Order threaded engine block connector separate)
512B	1723165SM	1	HOSE, Oil Drain, 10-1/2" Long, 3/8-18 Fittings -(10.5")
512C	5048681SM	1	HOSE, OIL DRAIN -(12.5")
517	593633	1	RETAINER, Oil Drain
988	692063	1	GASKET, Oil Adapter
1027	492932S	1	FILTER, Oil
1028	492687	1	ADAPTER, Oil Filter -(Adapter Kit for mounting remote oil filter)
1028A	495244	1	ADAPTER-OIL FILTER -(Remote oil filter mounting head with fittings)
1346	844802	1	VALVE, Oil Drain Shut Off
1346A	492031	1	VALVE, Oil Drain Shut Off
1346B	5401WEB	1	VALVE, Oil Drain Shut Off -(1/4 Turn Oil Drain Valve with Hose)
1505	100169		OIL-1QT VANGUARD (CASE) -(1 qt. Bottle)
1505A	100170		OIL-5QT VANGUARD (CASE) -(5 qt. Bottle)
1600	494724	2	HOSE, Remote Oil Filter -(Hoses only (2) 18" (48 cm))
1600	494725	2	HOSE, Remote Oil Filter -(Hoses only (2) 30" (76 cm))

Not For Reproduction

Copyright © Briggs & Stratton. All Rights reserved

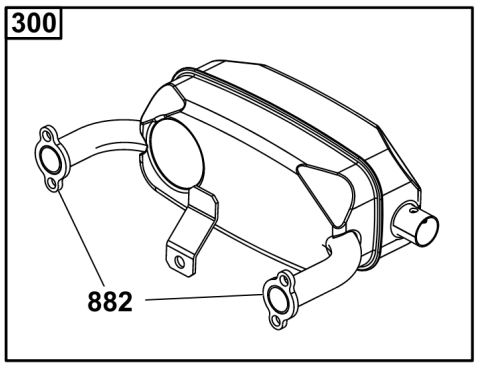

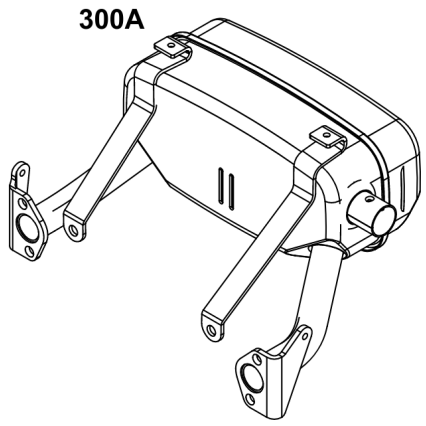

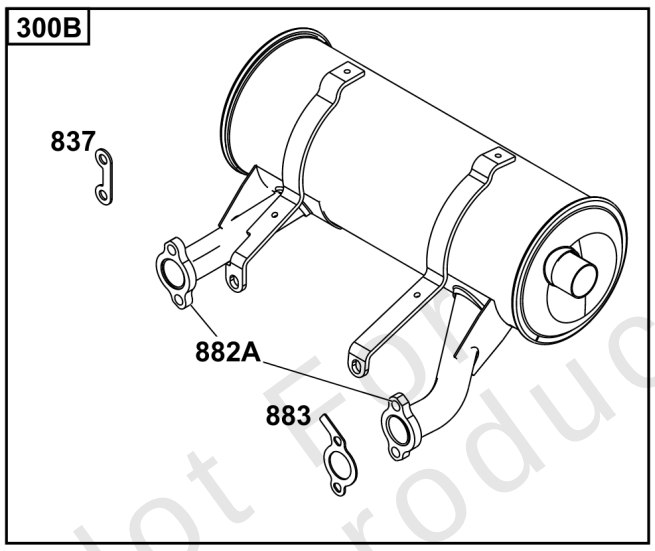

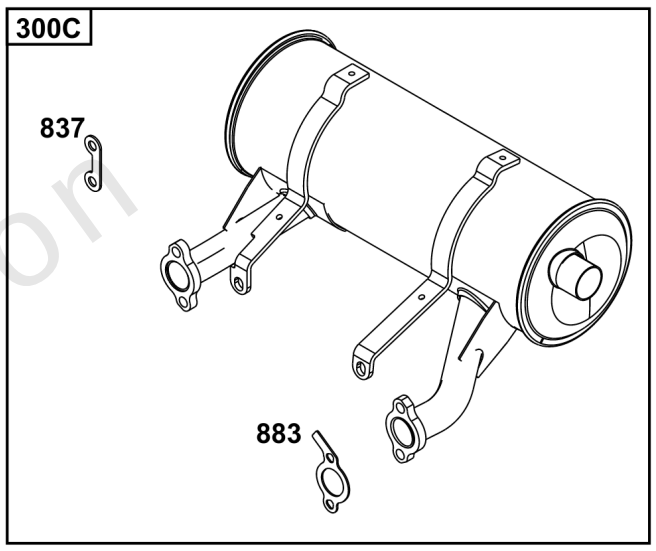

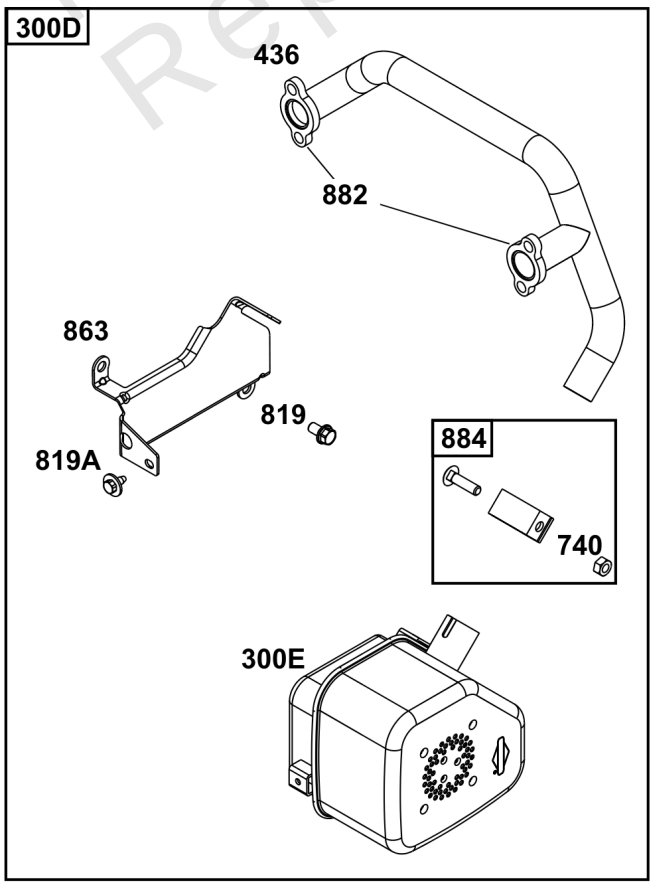

Not For Reproduction

Starter Motor Side Outlet Mufflers

REF NO	PART NO	QTY	DESCRIPTION
300	690931	1	MUFFLER -(Super Lo-Tone) (Horizontal: 3054, 3564)
300A	690906	1	MUFFLER -(Super Lo-Tone) (Horizontal: 3054, 3564)
300B	808705	1	MUFFLER -(5" Round) (Horizontal: 3854, 3864)
300C	845873	1	MUFFLER -(5" Round, Stainless Steel) (Horizontal: 3854, 3864)
300D	995005	1	MUFFLER ASSY -(Lo-Tone) (Horizontal: 3054, 3564)
300E	692099	1	MUFFLER -(Lo Mount)
436	691499	1	MANIFOLD, Exhaust -(Cylinder 1) (Side Outlet)
740	793859	1	NUT
819	692056	2	SCREW -(Muffler Bracket) (M8x1.25)
819A	691514	2	SCREW -(Muffler Bracket) (M6 X 1.0)
837	808085	2	SPACER, Muffler -(Includes 2)
863	690756	1	BRACKET, Muffler -(Cylinder 1) (Side Outlet)
882	692074	2	FLANGE, Exhaust
882A	806965	2	FLANGE, Exhaust
883	806425	2	GASKET, Exhaust
884	690898	1	CLAMP, Muffler

Not For Reproduction

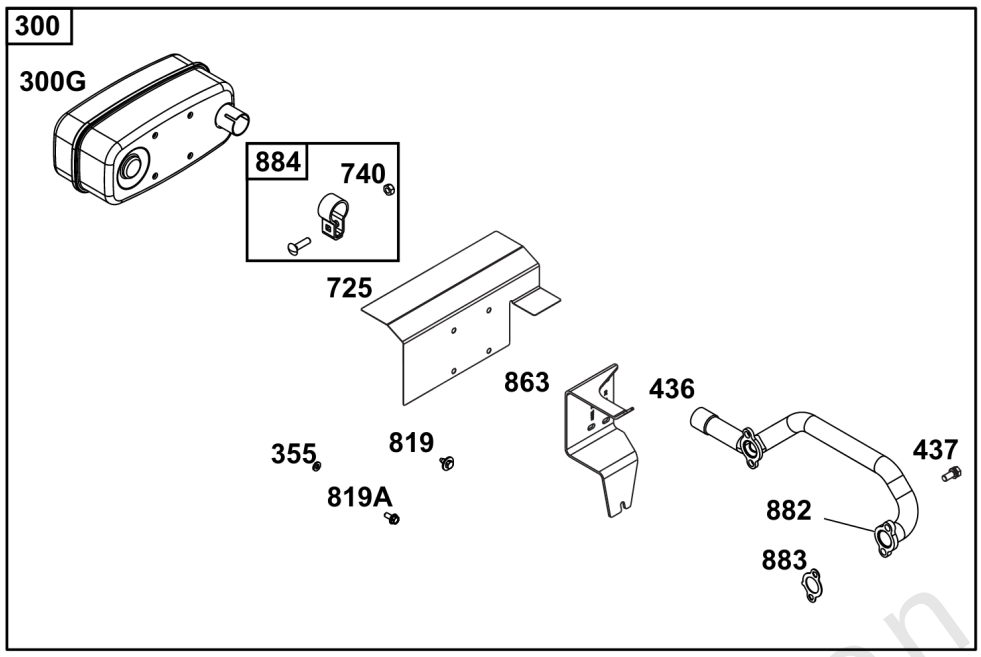

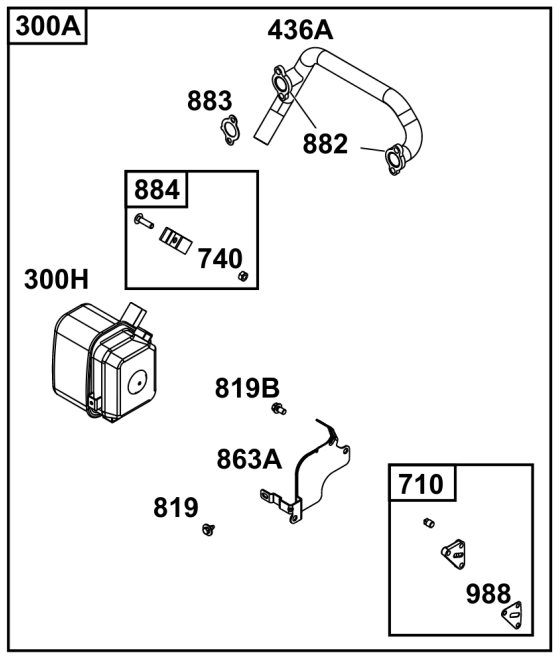

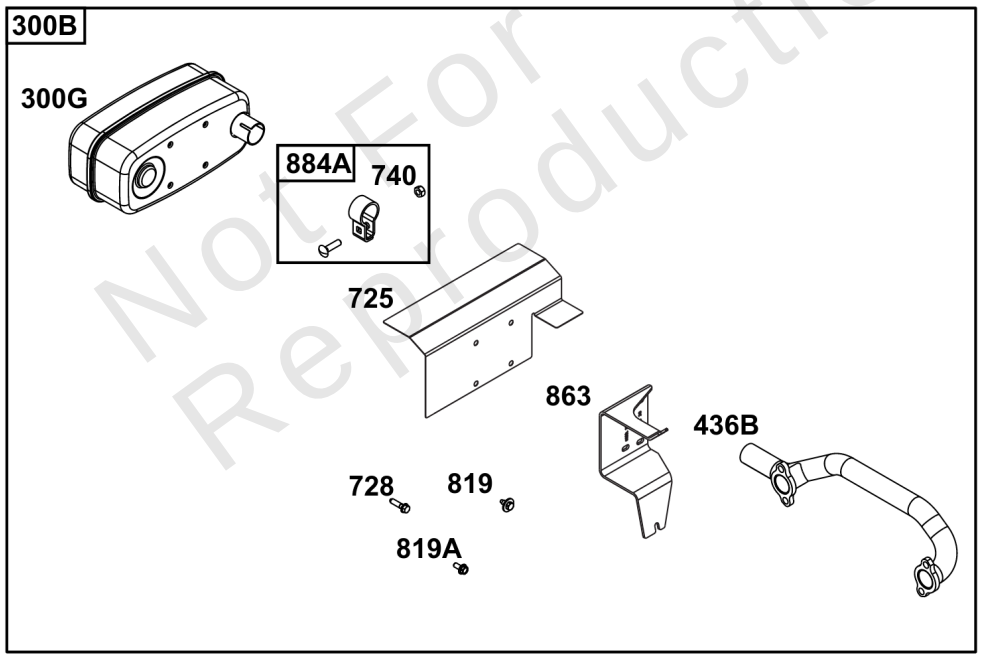

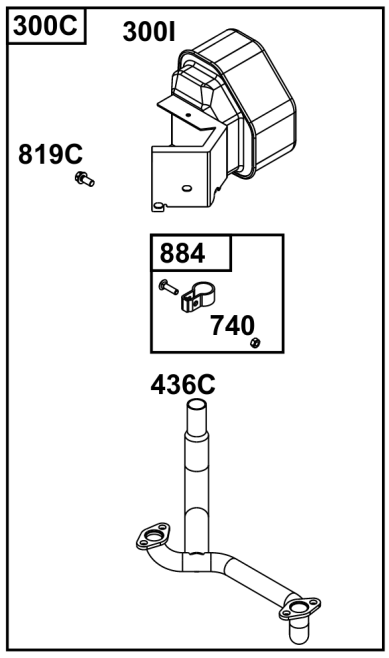

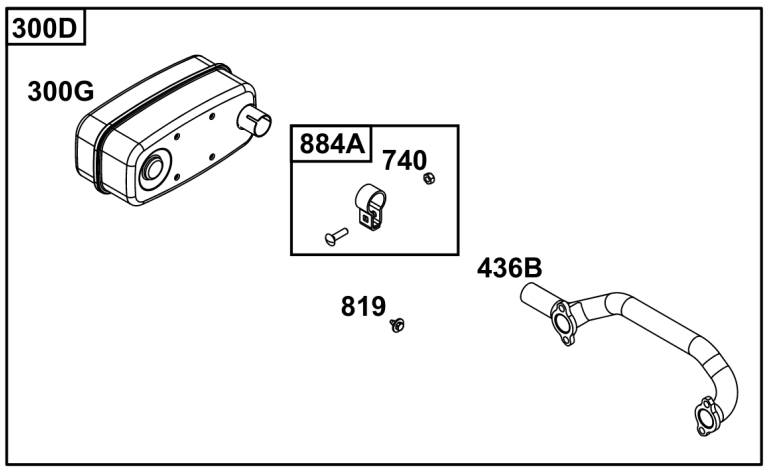

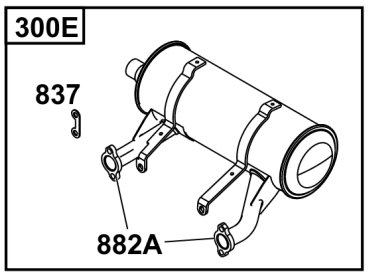

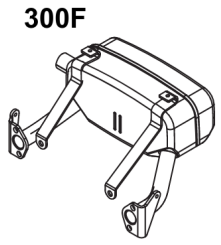

Not For Reproduction

Oil Filter Side Outlet Mufflers

REF NO	PART NO	QTY	DESCRIPTION
300	995002	1	HIGH MNT SPR LO-TONE OIL FLTR SIDE -(Super Lo-Tone) (Horizontal: 3054, 3564) (Vertical: 3567)
300A	995000	1	OIL FILTER SIDE LO-MT -(Lo-Tone) (Horizontal: 3054, 3564) (Requires 808033 Oil Filter Adaptor)
300B	995004	1	HI MNT SPR LO-TONE OIL FLT SIDE -(Super Lo-Tone) (Horizontal: 3854, 3864) (Vertical: 3867)
300C	995009	1	COMMERCIAL MOWERS KIT -(For Wide Area Walker) (Vertical: 3567)
300D	995010	1	COMMERCIAL MOWERS KIT -(Vertical: 3867)
300E	808896	1	MUFFLER
300F	691562	1	MUFFLER -(Super Lo-Tone) (Horizontal: 3054, 3564)
300G	498984S	1	MUFFLER -(Super Lo Tone)
300H	807948	1	MUFFLER -(Lo Mount)
300I	807953	1	MUFFLER
355	842122	2	WASHER -(Muffler Bracket)
436	805609	1	MANIFOLD, Exhaust -(Cylinder 2) (Side Outlet)
436A	692061	1	MANIFOLD, Exhaust -(Cylinder 2) (Side Outlet)
436B	808916	1	MANIFOLD, Exhaust -(Cylinder 2) (Side Outlet)
436C	805778	1	MANIFOLD, Exhaust -(Wide Area Walker)
437	691902	4	SCREW -(Exhaust Manifold)
710	807689	1	COVER, Oil Filter
725	806102	1	SHIELD, Heat
728	690297	2	SCREW
740	793859	1	NUT
819	691514	2	SCREW -(Muffler Bracket) (M6 X 1.0)
819A	807084	2	SCREW -(Muffler Bracket)
819B	692056	2	SCREW -(Muffler Bracket) (M8x1.25)
819C	692062	2	SCREW -(Muffler Bracket)
837	808085	2	SPACER, Muffler -(Includes 2)
863	806759	1	BRACKET, Muffler
863A	691513	1	BRACKET, Muffler
882	692074	2	FLANGE, Exhaust -(3054 & 3564)
882A	806965	2	FLANGE, Exhaust
883	691613	2	GASKET, Exhaust
884	690898	1	CLAMP, Muffler
884A	691956	1	CLAMP, Muffler
988	690687	1	GASKET, Oil Adapter

Not For Reproduction

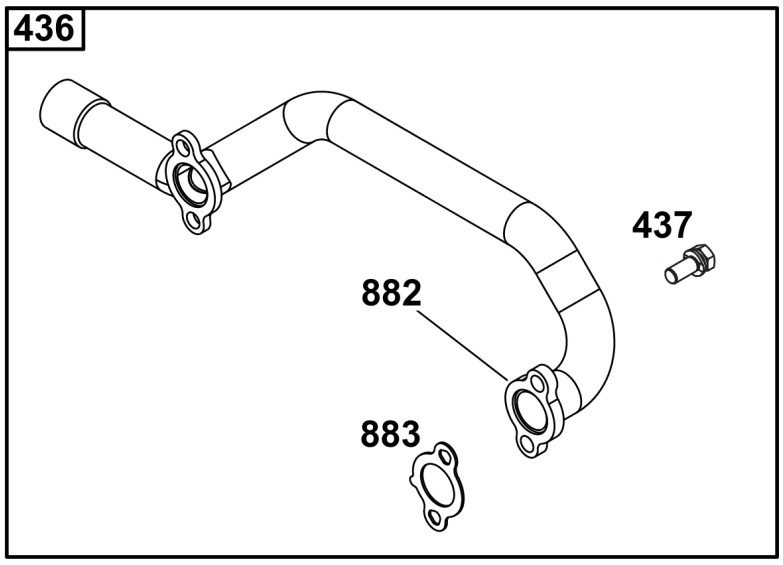

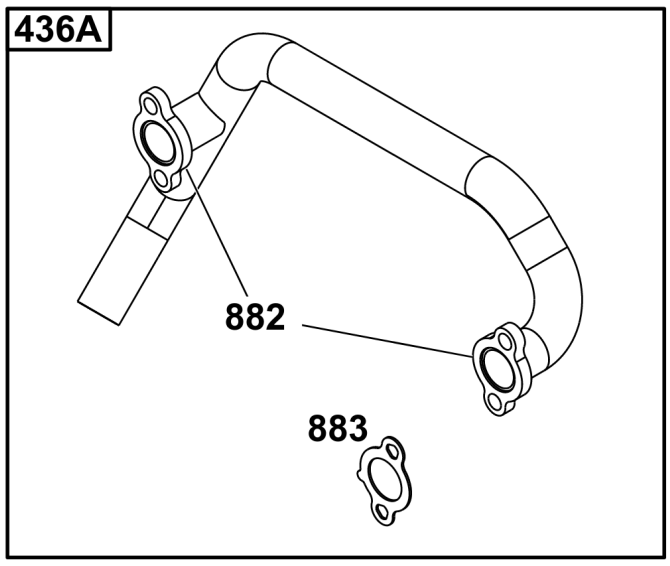

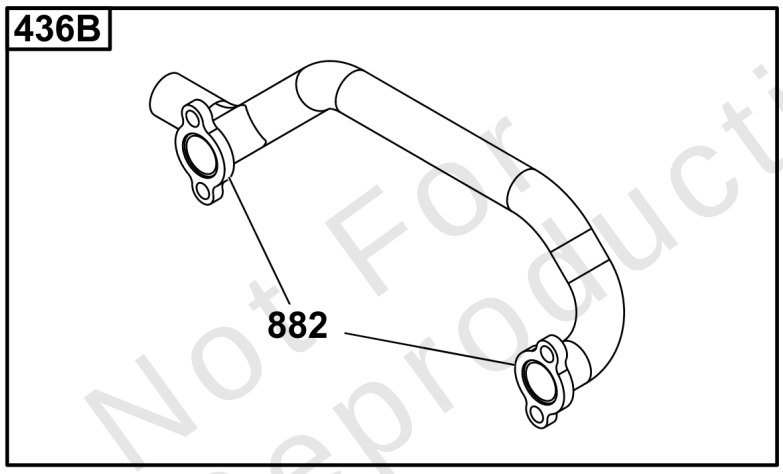

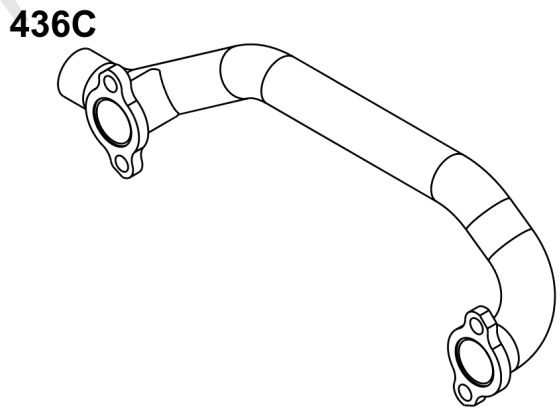

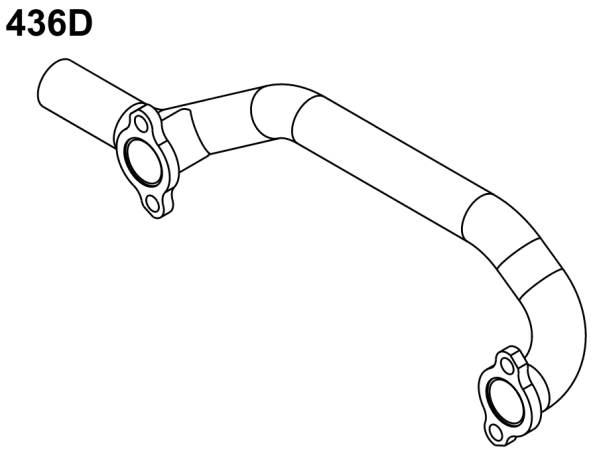

Not For Reproduction

Oil Filter Side Outlet Manifolds

REF NO	PART NO	QTY	DESCRIPTION
436	805609	1	MANIFOLD, Exhaust -(Vertical: 3567)
436A	692061	1	MANIFOLD, Exhaust -(Horizontal: 3054, 3564)
436B	691501	1	MANIFOLD, Exhaust -(Horizontal: 3054, 3564)
436C	808908	1	MANIFOLD, Exhaust -(Horizontal: 3854, 3864)
436D	808916	1	MANIFOLD, Exhaust -(Horizontal: 3854, 3864) (Vertical: 3867)
437	691902	4	SCREW -(Exhaust Manifold)
882	692074	2	FLANGE, Exhaust
883	691613	2	GASKET, Exhaust

Not For Reproduction

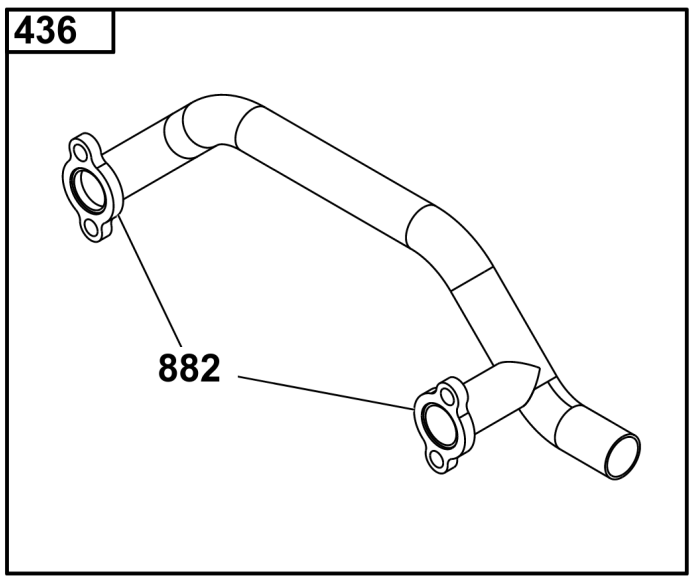

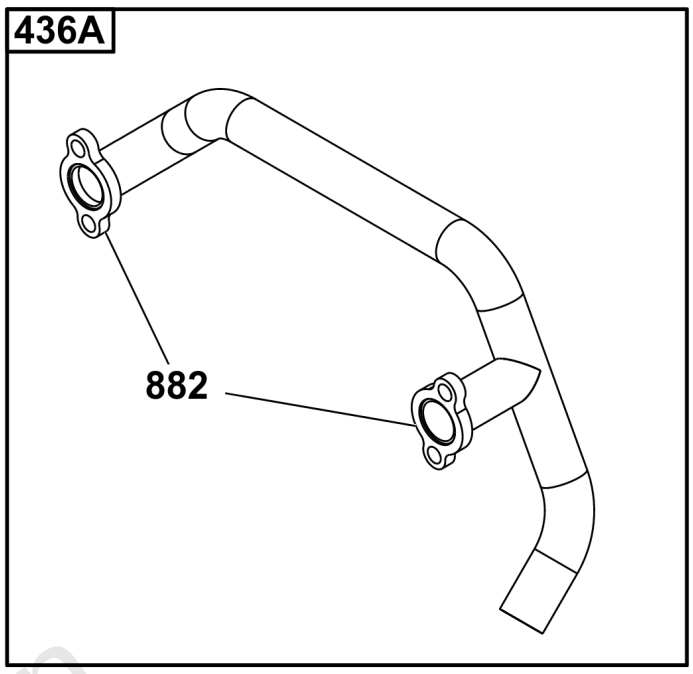

436B

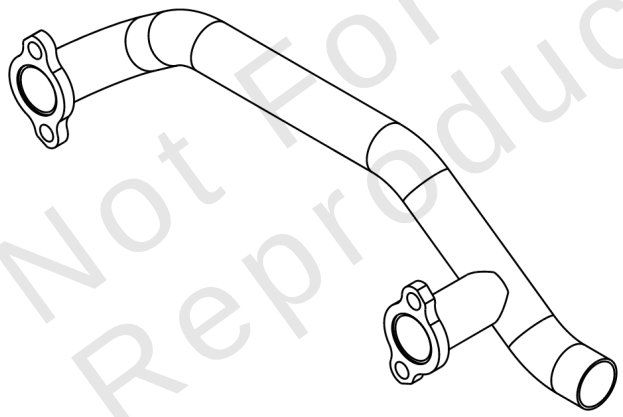

Not For Reproduction

Copyright © Briggs & Stratton. All Rights reserved

Starter Motor Side Outlet Manifolds

REF NO	PART NO	QTY	DESCRIPTION
436	691502	1	MANIFOLD, Exhaust -(Horizontal: 3054, 3564)
436A	691499	1	MANIFOLD, Exhaust -(Horizontal: 3054, 3564)
436B	808909	1	MANIFOLD, Exhaust -(Horizontal: 3854, 3864) (Vertical: 3867)
882	692074	2	FLANGE, Exhaust

Not For Reproduction

Copyright © Briggs & Stratton. All Rights reserved

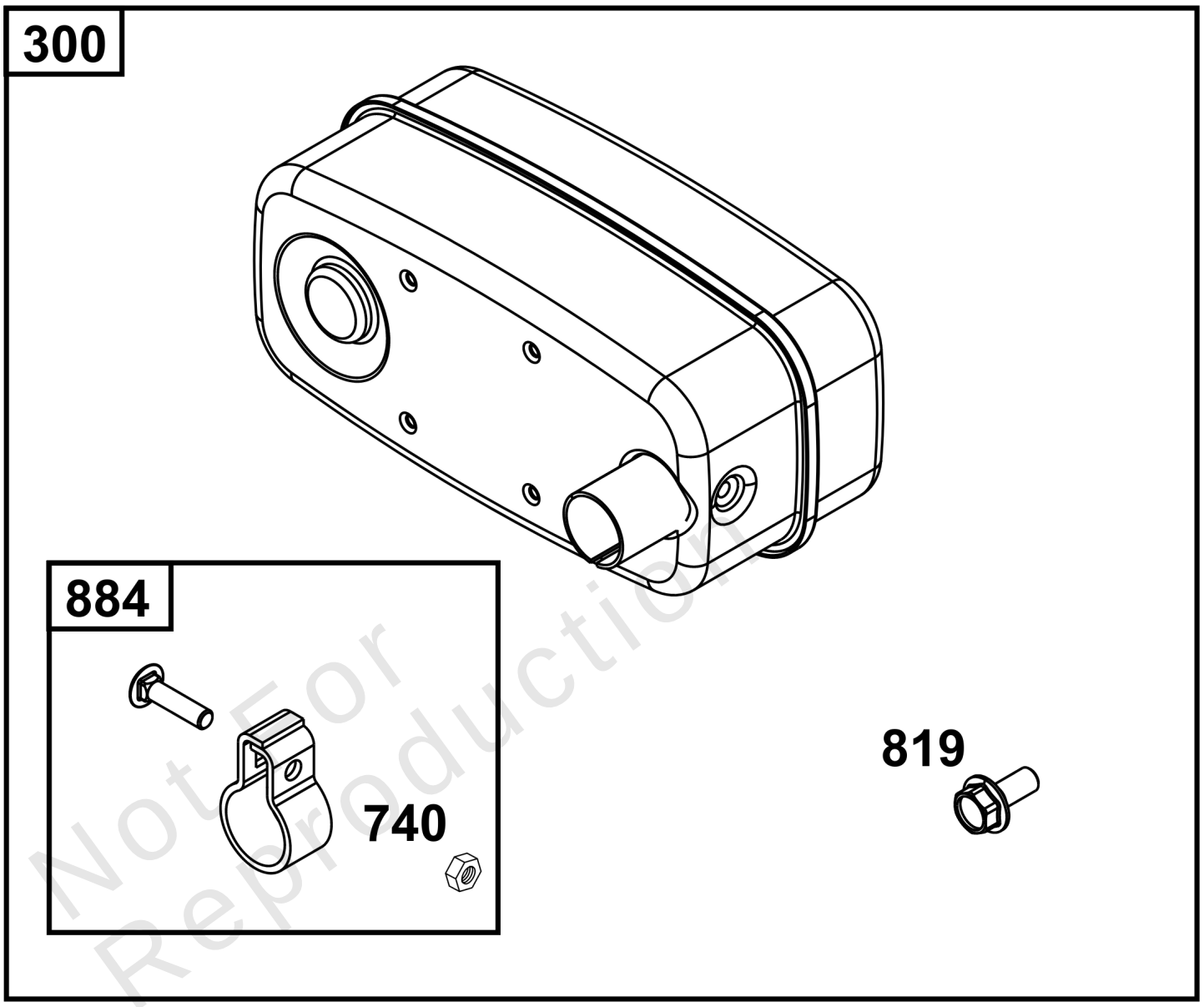

Not For Reproduction

Mufflers

REF NO	PART NO	QTY	DESCRIPTION
300	995018	1	MUFFLER -(Inlet I.D. 1.14" (28.9mm))
740	793859	1	NUT
819	807084	4	SCREW
884	691956	1	CLAMP, Muffler

Not For Reproduction

Copyright © Briggs & Stratton. All Rights reserved

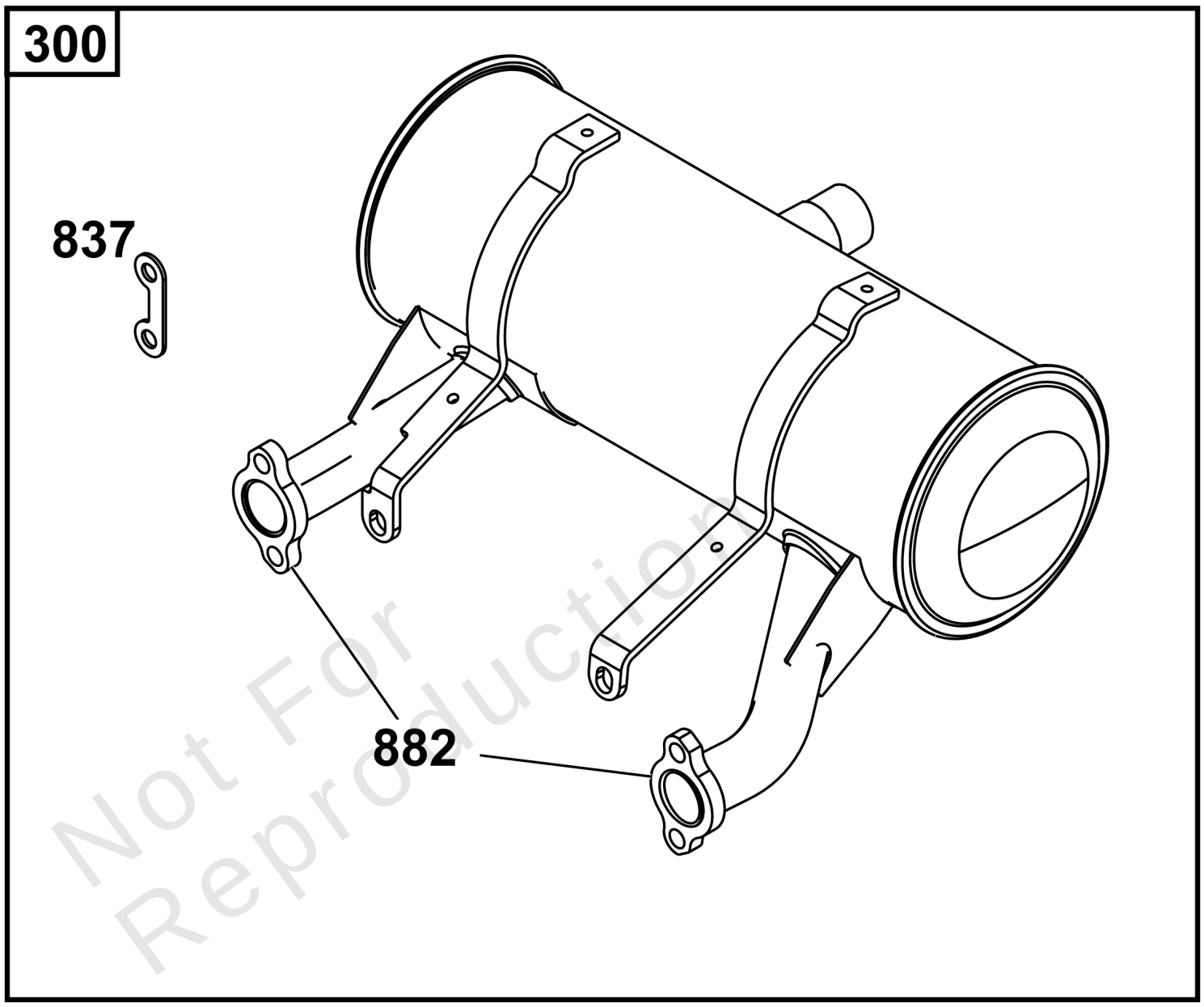

Not For Reproduction

Copyright © Briggs & Stratton. All Rights reserved

Center Outlet Mufflers

REF NO	PART NO	QTY	DESCRIPTION
300	808911	1	MUFFLER -(5" Round) (Horizontal: 3854, 3864)
837	808085	2	SPACER, Muffler
882	806965	2	FLANGE, Exhaust

Not For Reproduction

Copyright © Briggs & Stratton. All Rights reserved

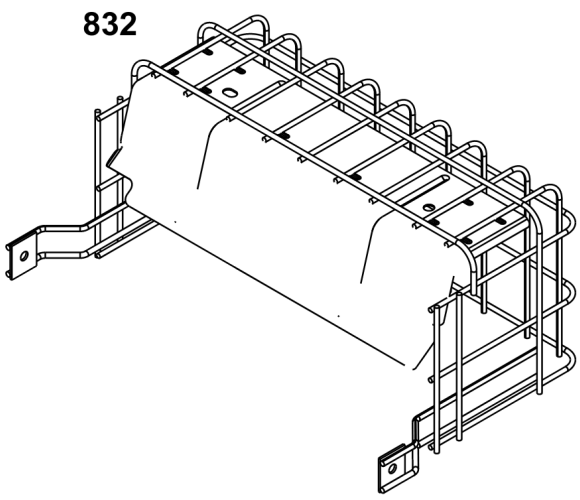

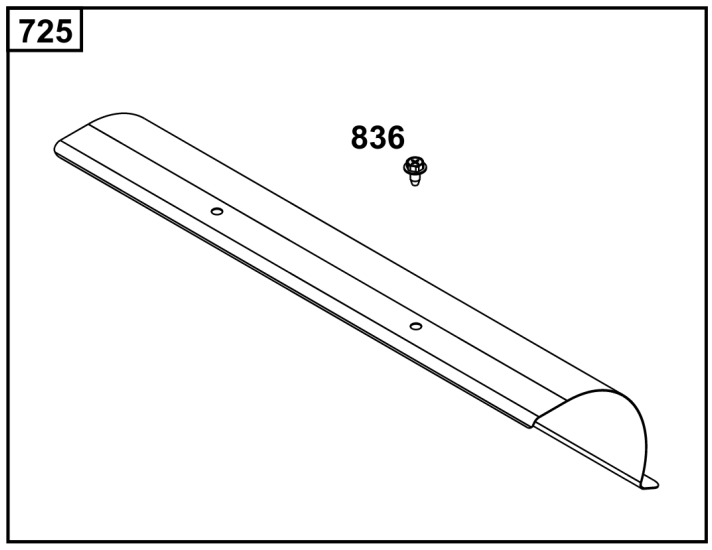

Not For Reproduction

Muffler Guards and Shields

REF NO	PART NO	QTY	DESCRIPTION
725	846568	1	SHIELD, Heat -(For 5" Round Mufflers) (Horizontal: 3854, 3864)
832	691571	1	GUARD, Muffler -(Assembly for 690906 & 691562) (Horizontal: 3054, 3564)
836	692067	4	SCREW

Not For Reproduction

Copyright © Briggs & Stratton. All Rights reserved

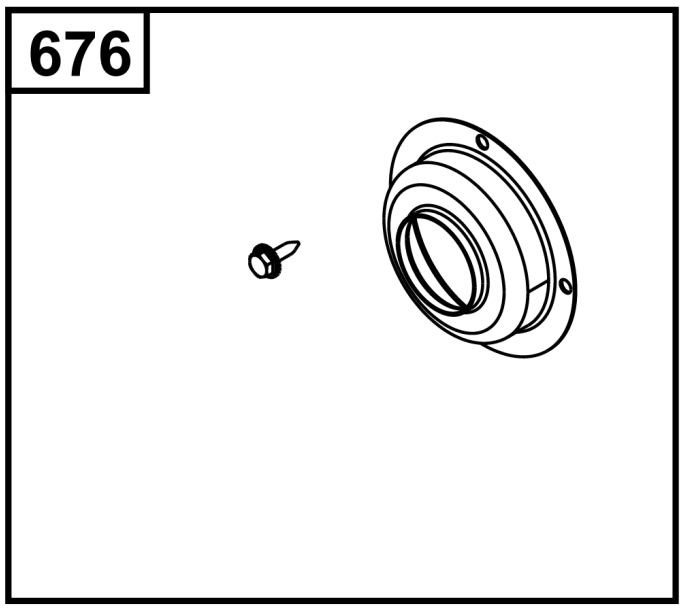

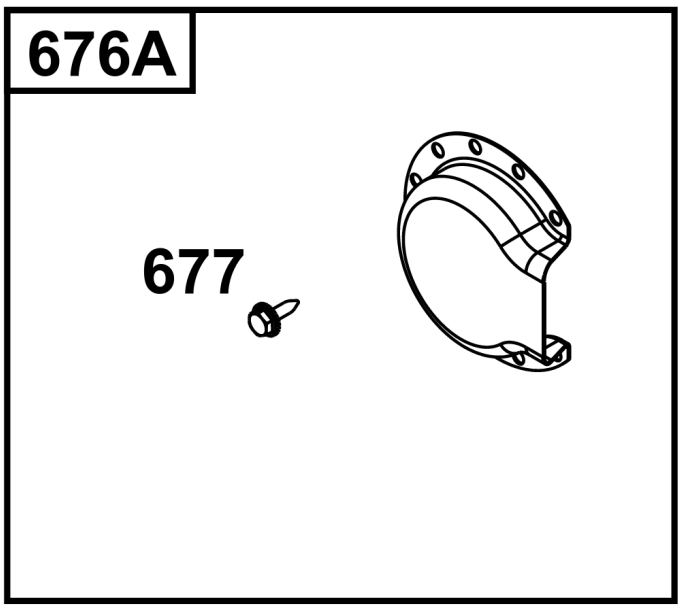

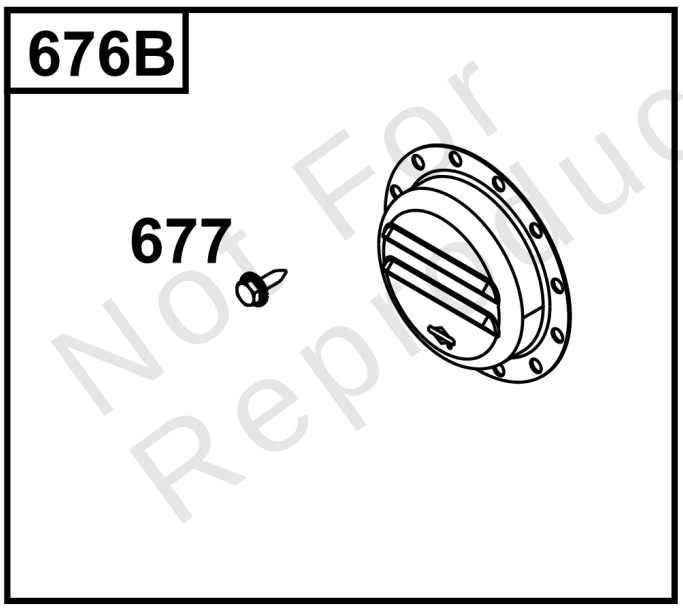

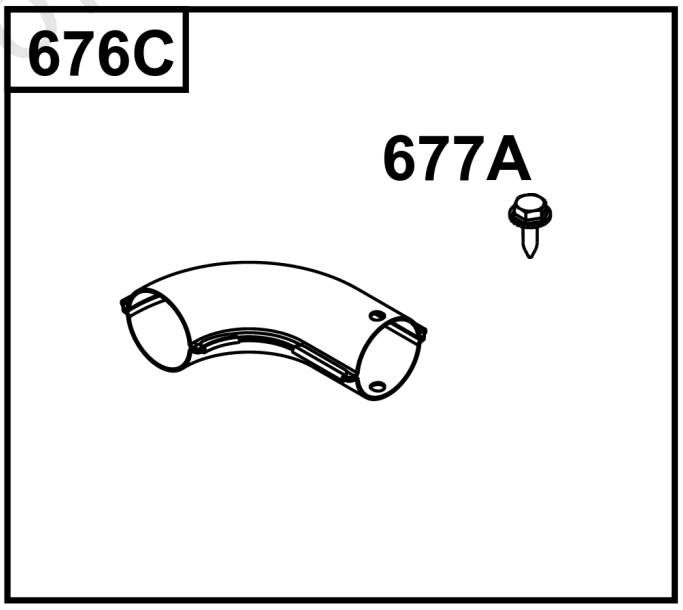

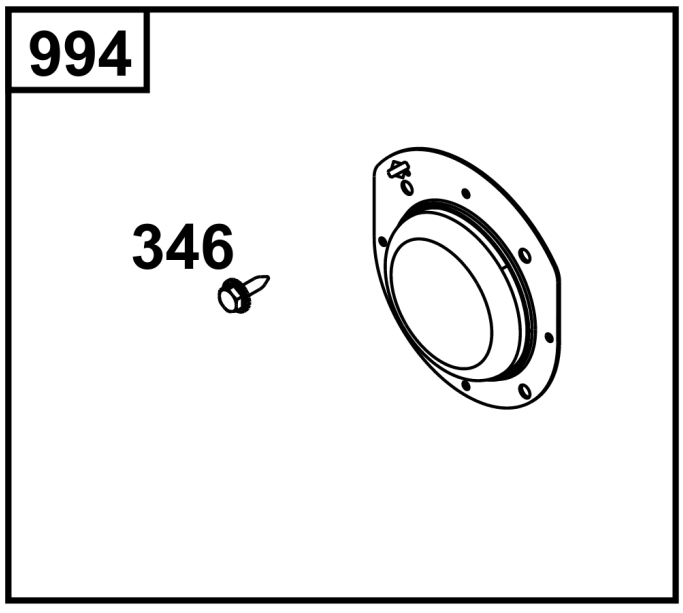

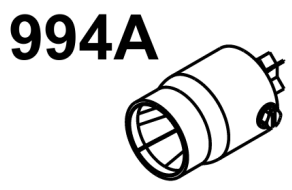

Not For Reproduction

Spark Arrestors and Deflectors

REF NO	PART NO	QTY	DESCRIPTION
346	794845	4	SCREW -(Spark Arrestor)
676	396903	1	DEFLECTOR, Muffler -(Direct Outlet) (Face Mounting with 4 Screws)
676A	795036	1	DEFLECTOR, Muffler -(Deflector 90 Degree) (Face Mounting with 4 Screws)
676B	795038	1	DEFLECTOR, Muffler -(Deflector Louvered) (Face Mounting with 4 Screws)
676C	495518	1	DEFLECTOR, Muffler -(Elbow for Muffler Assembly) (For Exit Pipe O.D. of 1.10" (28mm))
677	794845	4	SCREW -(Muffler Deflector)
677A	810079	1	SCREW -(Muffler Deflector)
994	794945	1	ARRESTOR, Spark -(Spark Arrestor) (Face Mounting with 4 Screws)
994A	594562	1	ARRESTOR, Spark -(Spark Arrester) (For Exit Pipe O.D. of 1.10" (28mm))

Not For Reproduction

Copyright © Briggs & Stratton. All Rights reserved

613

1177

296

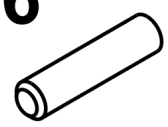

883

883A

882

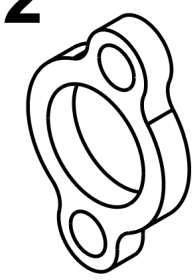

Not For Reproduction

882A

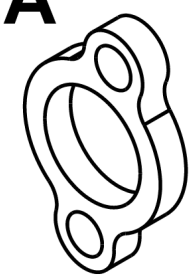

Muffler Mounting Hardware

REF NO	PART NO	QTY	DESCRIPTION
296	841185	4	STUD -(Mounting Mufflers)
613	691902	4	SCREW -(Mounting Mufflers)
882	692074	2	FLANGE, Exhaust -(3054 & 3564)
882A	806965	2	FLANGE, Exhaust -(3854 & 3864)
883	806425	2	GASKET, Exhaust -(Horizontal: 3854, 3864) (Vertical: 3567)
883A	691613	2	GASKET, Exhaust -(Horizontal: 3054, 3564) (Vertical: 3567)
1177	842067	4	NUT -(Required if Using 841185)

Not For Reproduction

Copyright © Briggs & Stratton. All Rights reserved

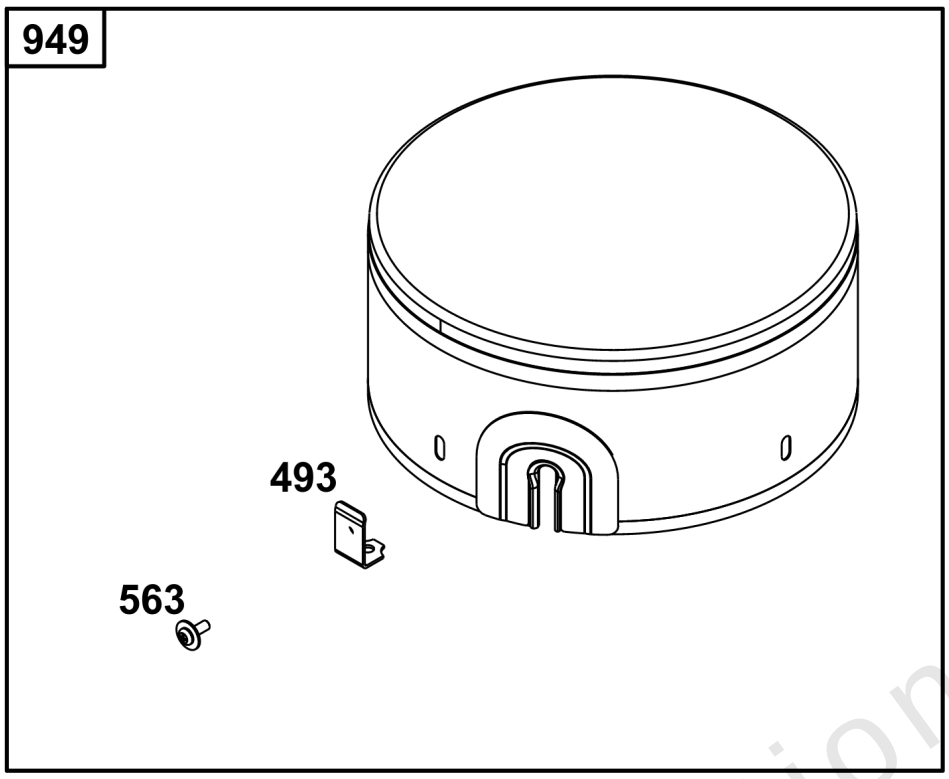

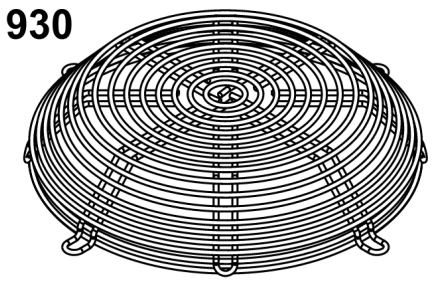

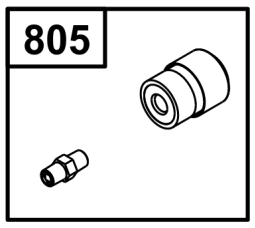

Not For Reproduction

Flywheel and Air Intake Guards

REF NO	PART NO	QTY	DESCRIPTION
493	845729	4	BRACKET, Mounting
563	841441	4	SCREW
805	843024	1	MINDER, Filter -(For Engines with Cyclonic Air Filter)
930	846284	1	GUARD, Flywheel Fan
949	845728	1	GUARD, Debris Screen -(Vertical: 3867)

Not For Reproduction

Copyright © Briggs & Stratton. All Rights reserved

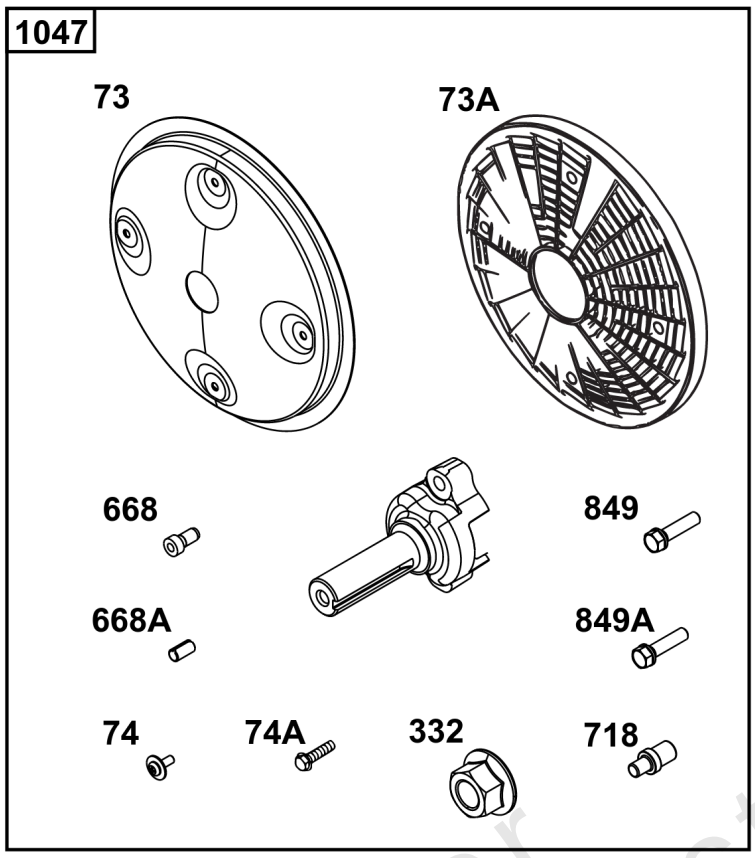

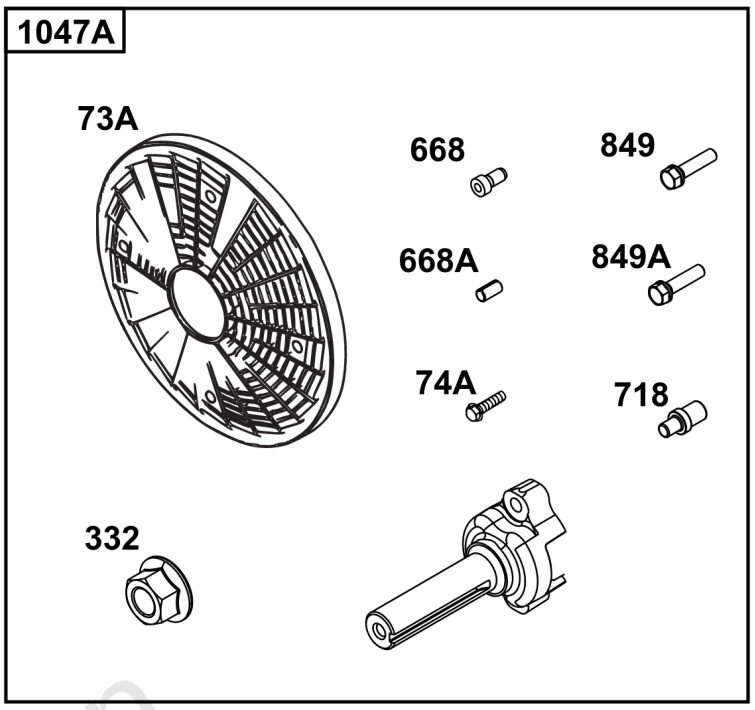

Not For Reproduction

PTO

REF NO	PART NO	QTY	DESCRIPTION
73	841582	1	SCREEN, Rotating
73A	494439	1	SCREEN, Rotating
74	841441	4	SCREW -(Rotating Screen)
74A	691647	4	SCREW -(Rotating Screen)
332	690887	1	NUT -(Flywheel)
668	691500	4	SPACER -(Rotating Screen)
668A	691215	4	SPACER -(Rotating Screen)
718	841581	1	PIN, Locating -(32MM)
849	691088	2	SCREW -(Stub Shaft)
849A	846236	2	SCREW -(Stub Shaft)
1047	841580	1	SHAFT, Stub -(1" Diameter) (4.75" Length)
1047A	842655	1	SHAFT, Stub -(1" Diameter) (5.43" Length)

Not For Reproduction

Copyright © Briggs & Stratton. All Rights reserved

789

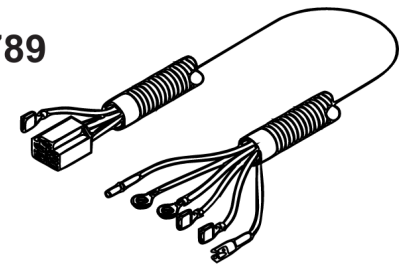

789A

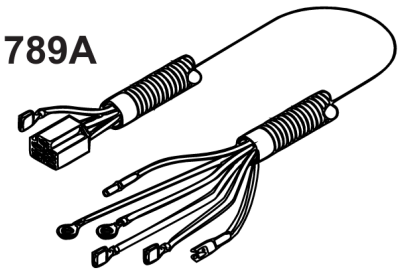

789B

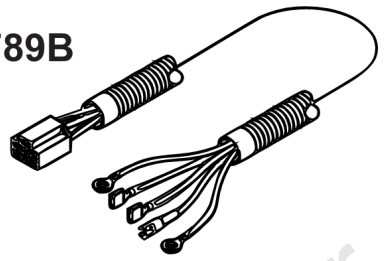

789C

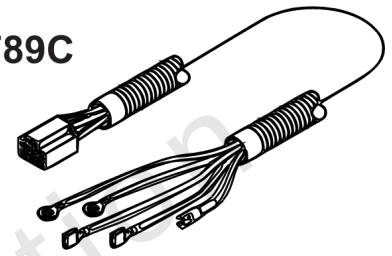

415

Not For Reproduction

578

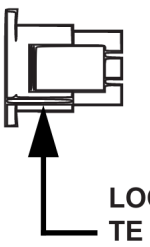

LOOSE CONNECTOR:
TE # 1-480704-0
MATE-N-LOK 6 POSITION HOUSING

Copyright © Briggs & Stratton. All Rights reserved

REF NO	PART NO	QTY	DESCRIPTION
415	1714480SM	1	PLUG -(Plug for Ignition Switch Removal)
578	84007350	1	WIRE ASSEMBLY -(Aids in Repowering Engine Application with 6-Pin Connector and Wires with Terminals to Create Custom Adapter Configurations)
789	691996	1	HARNESS, Wiring -(For 16 Amp Alternators)
789A	841318	1	HARNESS, Wiring -(For 16 Amp Alternators with Solenoid Shift Starter)
789B	847601	1	HARNESS, Wiring -(For 20 Amp Alternators)
789C	847602	1	HARNESS, Wiring -(For 20 Amp Alternators with Solenoid Shift Starter)

Not For Reproduction

Copyright © Briggs & Stratton. All Rights reserved

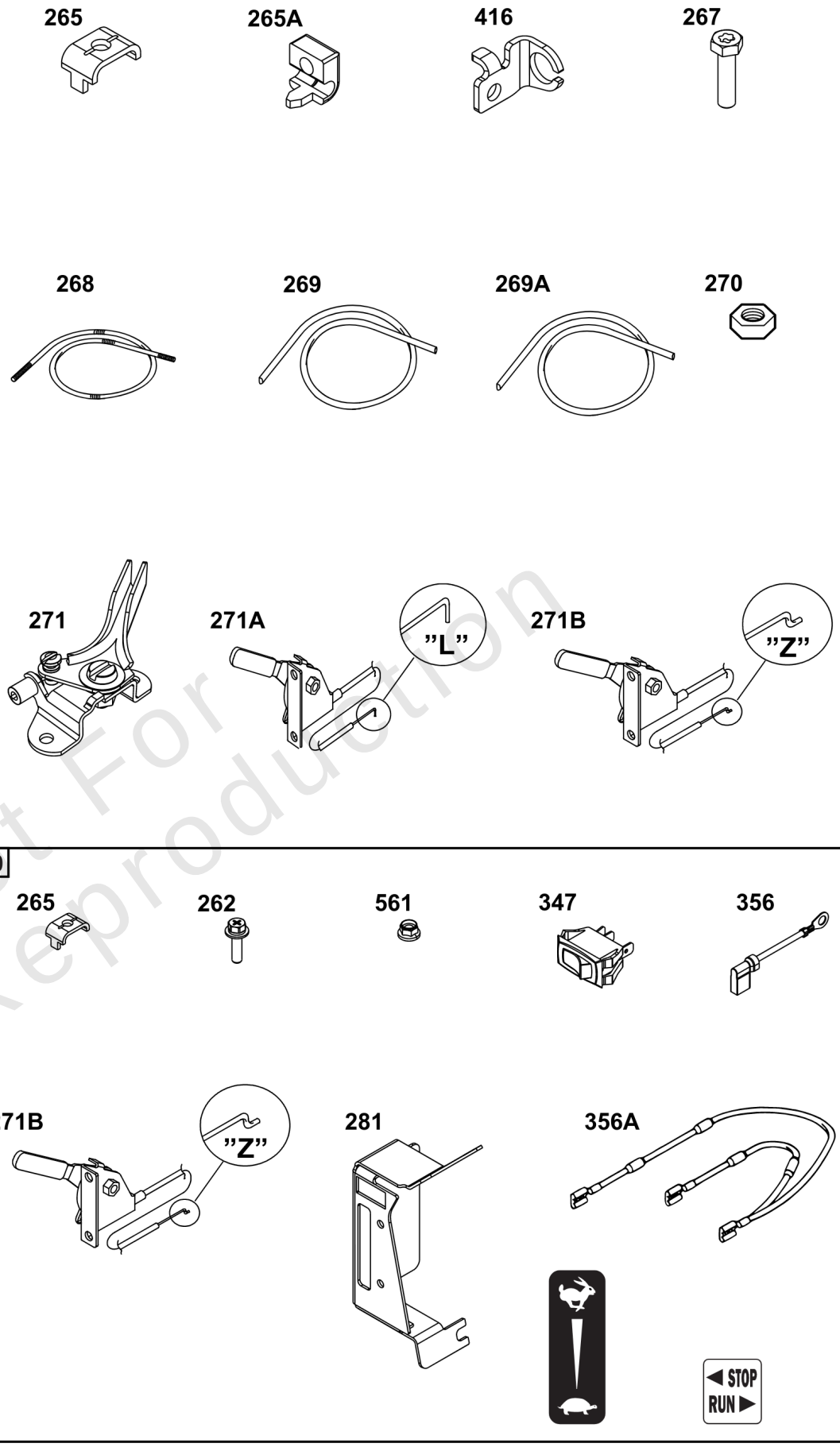

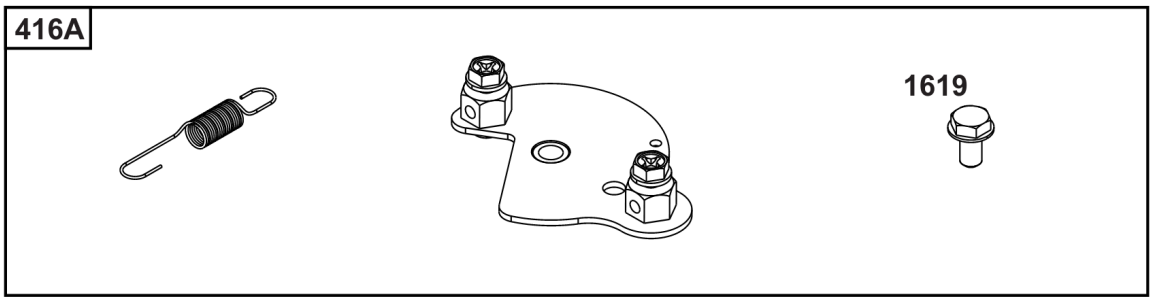

Not For Reproduction

Speed Control

REF NO	PART NO	QTY	DESCRIPTION
262	841552	1	SCREW
265	691024	1	CLAMP, Casing -(Casing Clamp for Hard Casing)
265A	690798	1	CLAMP, Casing -(Casing Clamp for Soft Casing)
267	792629	1	SCREW -(Screw for Casing Clamp)
268	691025	1	CASING, Control Wire -(Wire Casing 72")
269	26634	1	WIRE, Control -(Control Wire 78")
269A	93907	1	WIRE, Control -(Control Wire 100")
270	691027	1	NUT -(Nut for Wire Casing)
271	691028	1	LEVER, Control -(Speed Control Lever Assembly)
271A	692105	1	LEVER, Control -(Speed Control Lever Assembly) ('L' Shaped End)
271B	692541	1	LEVER, Control -(Speed Control Lever Assembly) ('Z' Shaped End)
281	690742	1	PANEL, Control
347	691995	1	SWITCH-ROCKER
356	690796	1	WIRE, Stop
356A	691999	1	WIRE ASSEMBLY
416	595196	1	BRACKET, Throttle Cable -(Casing Clamp for Snap-In Casing)
416A	84006945	1	BRACKET, Throttle Cable
561	806447	1	NUT
620	494052	1	BRACKET, Control -(Throttle Control for Vanguard V-Twin Horizontal Small Block)
1619	691693	1	SCREW

Not For Reproduction

Copyright © Briggs & Stratton. All Rights reserved

VANGUARD®

COMMERCIAL POWER

BRIGGS & STRATTON®

Copyright © Briggs & Stratton. All Rights reserved