Parts Manual

Mfg. No: 28N707-0129-01

Copyright © Briggs & Stratton. All Rights reserved

22-Jun-2026

Model Components

Page

Air Cleaner, Mufflers. 4
Alternator, Wires, Magneto, Key Switch. 6
Blower Housings, Label and Emissions Labels. 8
Carburetor. 10
Controls, Links, Springs, Fuel Pump, Fuel Hoses. 16
Crankcase Cover/Sump, Crankshaft, Cylinder, Piston/Rings, Connecting Rod. 20
Cylinder Head, Rocker Cover, Intake Manifold, Oil Pump, Oil Filter. 26
Electric Starter. 30
Flywheel Fan, Rotating Screen, Flywheel, Rewind Starter. 34
Replacement Engine - Europe, Middle East & Africa. 38
Replacement Engine - US & Canada. 39

Not For Reproduction

Copyright © Briggs & Stratton. All Rights reserved

Mfg. No: 28N707-0129-01

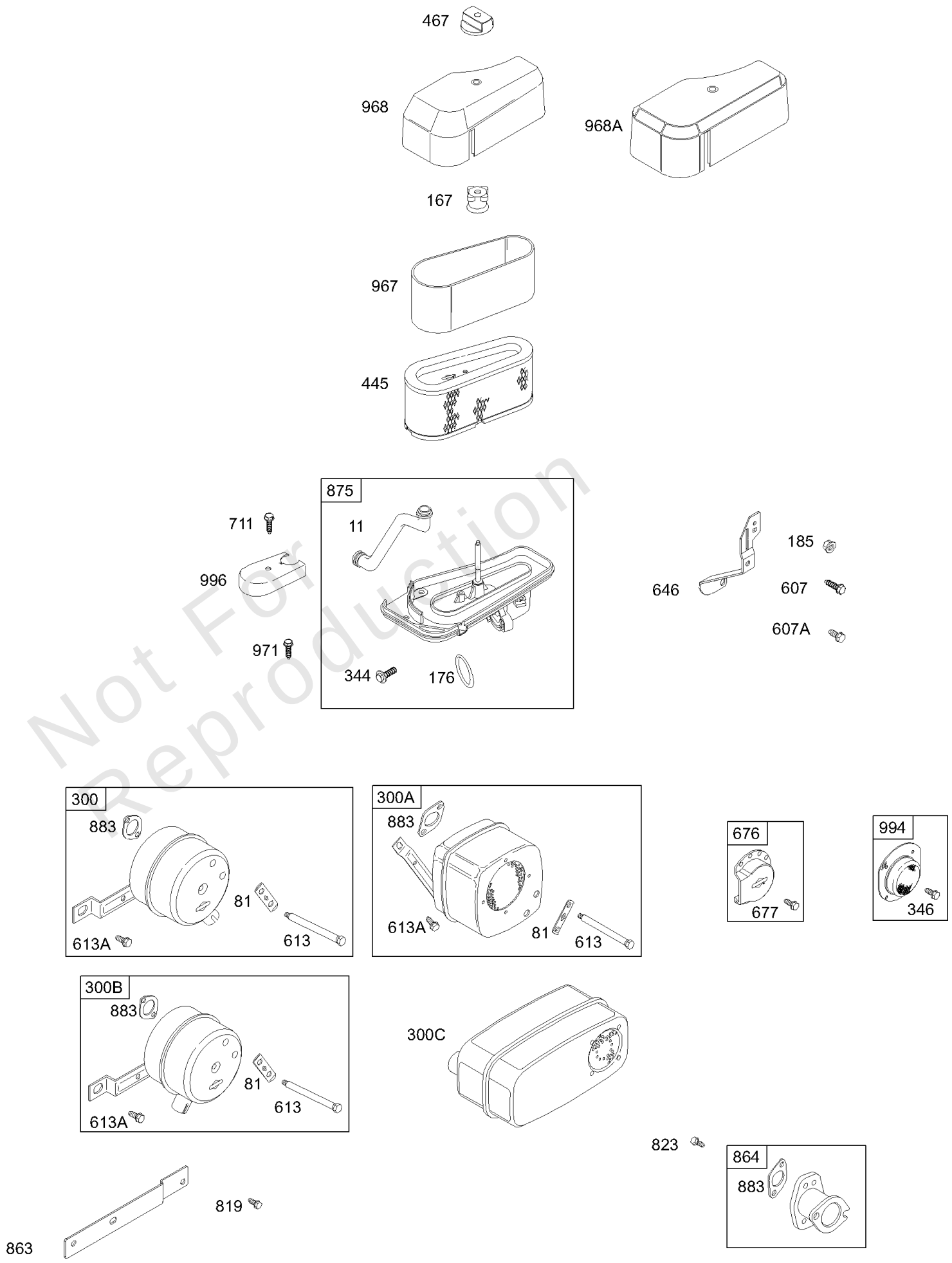

Not For Reproduction

Air Cleaner, Mufflers

REF NO	PART NO	QTY	DESCRIPTION
11	691328		TUBE, Breather
81	691178		LOCK, Muffler Screw
167	692297		SEAL-A/C NUT
176	691917		SEAL, O-Ring -(Air Cleaner Base)
185	690958		NUT -(Air Cleaner Base)
300	495805S		MUFFLER
300A	496022S		MUFFLER
344	693675		SCREW -(Cable Clamp)
346	690661		SCREW -(Spark Arrestor)
445	496894S		FILTER-A/C CARTRIDGE
467	691668		KNOB, Air Cleaner Cover
607	690703		SCREW -(Air Cleaner Brace)
607A	691693		SCREW -(Air Cleaner Brace)
613	691416		SCREW -(Muffler)
613A	691678		SCREW -(Muffler)
646	690460		BRACE, Air Cleanr
676	393761		DEFLECTOR, Muffler -(Side Outlet)
677	690661		SCREW -(Muffler Deflector)
711	690703		SCREW -(Carburetor Shield)
819	690297		SCREW -(Muffler Bracket)
823	698941		SCREW -(Muffler Adapter)
864	697346		ADAPTER, Muffler
875	696129		BASE, Air Cleaner -(Plastic)
883	692236		GASKET, Exhaust
967	272403S		FILTER-PRE CLEANER
968	691332		COVER, Air Cleaner
971	690810		SCREW -(Air Cleaner Base to Carburetor) -Used Before Code Date 97100600
971	692129		SCREW -(Air Cleaner Base to Carburetor) -Used After Code Date 97100500
994	392390		ARRESTOR, Spark
996	690678		SHIELD, Carburetor

Not For Reproduction

Copyright © Briggs & Stratton. All Rights reserved

Alternator, Wires, Magneto, Key Switch

Mfg. No: 28N707-0129-01

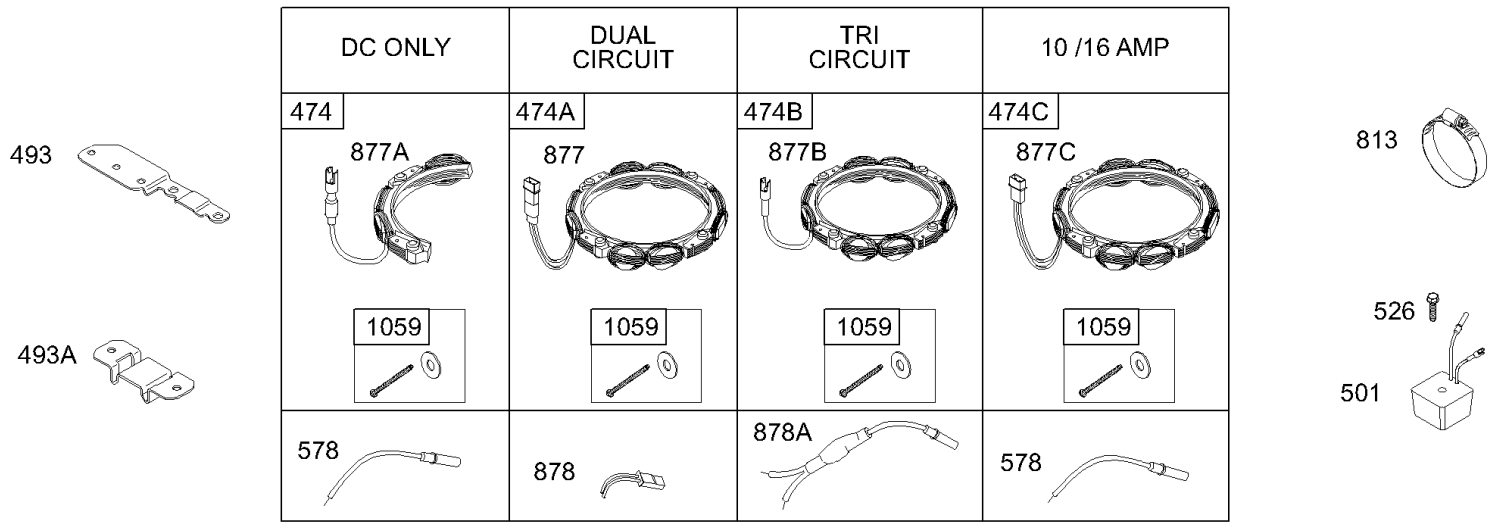

NOTE: ALL OLD STYLE STATORS USE
REFERENCE NUMBER 1119 MOUNTING SCREW

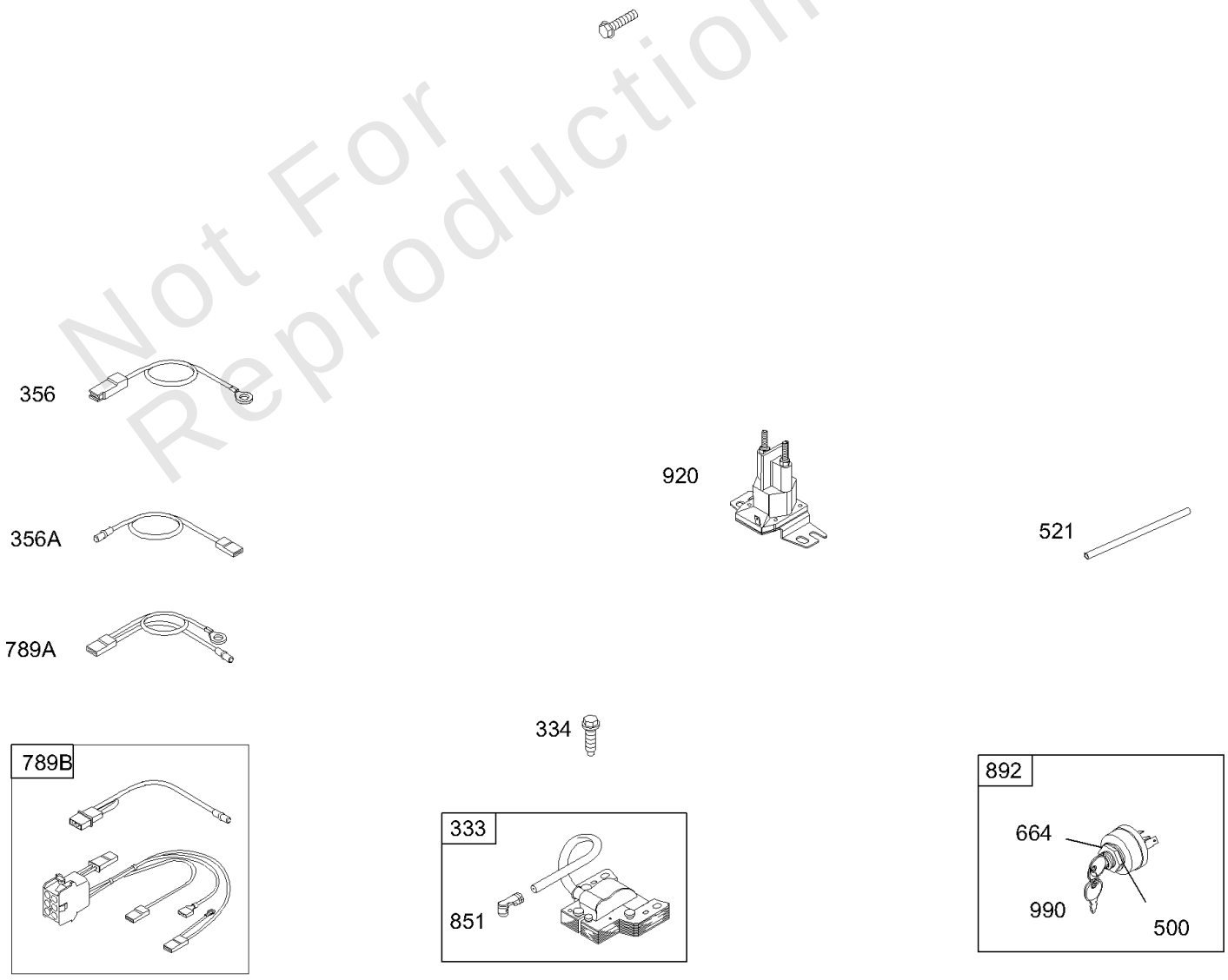

Not For Reproduction

Alternator, Wires, Magneto, Key Switch

REF NO	PART NO	QTY	DESCRIPTION
333	492341		ARMATURE, Magneto
334	691061		SCREW -(Magneto Armature)
356A	690807		WIRE, Stop
474	696578		ALTERNATOR -(DC Only)
474A	696459		ALTERNATOR -(Dual Circuit)
474B	696457		ALTERNATOR -(Tri Circuit)
474C	696458		ALTERNATOR -(10 and 16 Amp Regulated)
493	694475		BRACKET, Mounting
493A	691177		BRACKET, Mounting
500	691086		WASHER -(Key Switch)
501	691188		REGULATOR -(9 Amp Regulated)
521	690581		SHIELD, Cable
526	690326		SCREW -(Regulator) -Used Before Code Date 99070600
526	694476		SCREW -(Regulator) -Used After Code Date 99070500
664	691087		NUT -(Key Switch)
813	690635		CLAMP
851	692424		TERMINAL, Spark Plug
877	393456		WIRE/CONNECTOR, Alternator -(Dual Circuit)
877A	393814		WIRE/CONNECTOR, Alternator -(DC Only)
877B	393537		WIRE/CONNECTOR, Alternator -(Tri Circuit)
877C	399916		WIRE/CONN-ALTERNATOR -(10 and 16 Amp Regulated)
878	691237		HARNESS, Alternator -Used Before Code Date 01090400
878A	691955		HARNESS, Alternator
892	692318		SWITCH, Key
920	691656		SOLENOID, Starter
990	691959		SET, Key
1059	698516		KIT, Screw/Washer
1119	691183		SCREW -(Alternator)

Not For Reproduction

Copyright © Briggs & Stratton. All Rights reserved

1019 LABEL KIT

1036 EMISSION LABEL

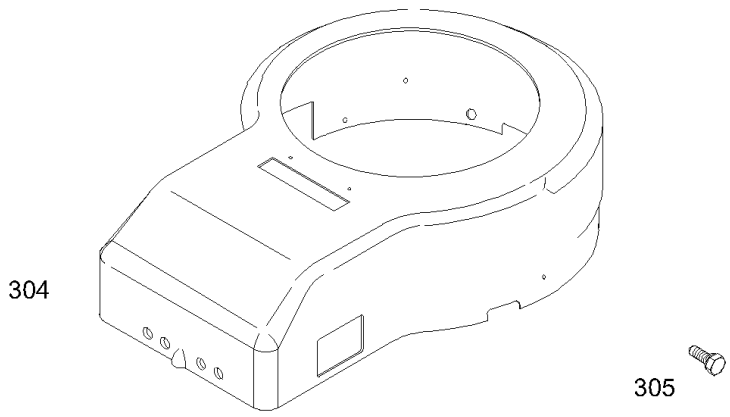

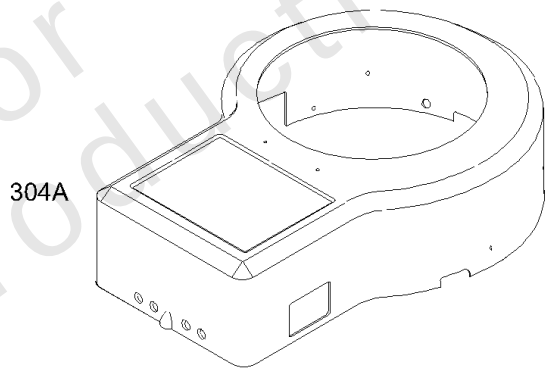

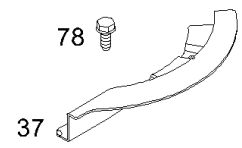

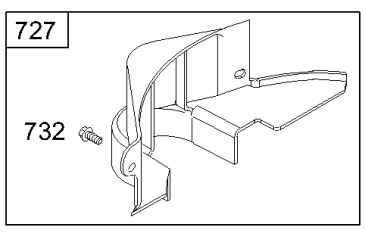

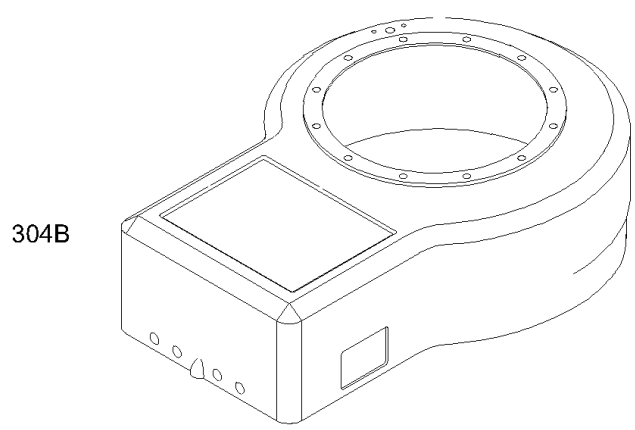

Not For Reproduction

Blower Housings, Label and Emissions Labels

REF NO	PART NO	QTY	DESCRIPTION
37	690456		GUARD, Flywheel
78	690661		SCREW -(Flywheel Guard)
304	691399		HOUSING, Blower -(Red)
304A	695065		HOUSING, Blower -(Black)
305	691108		SCREW -(Blower Housing)
727	490324		COVER, Starter Drive -(Includes Mounting Hardware)
732	691002		SCREW -(Starter Drive Cover)
1019	496758		KIT, Label
1036	695700		LABEL, Emissions -Used After Code Date 00063000
1036	694997		LABEL, Emissions -Used After Code Date 99093000 -Used Before Code Date 00070100
1036	499363		LABEL, Emissions -Used Before Code Date 97070100
1036	499364		LABEL, Emissions -Used After Code Date 97063000 -Used Before Code Date 99010100
1036	694318		LABEL, Emissions -Used After Code Date 98123100 -Used Before Code Date 99100100

Not For Reproduction

Copyright © Briggs & Stratton. All Rights reserved

Mfg. No: 28N707-0129-01

WALBRO

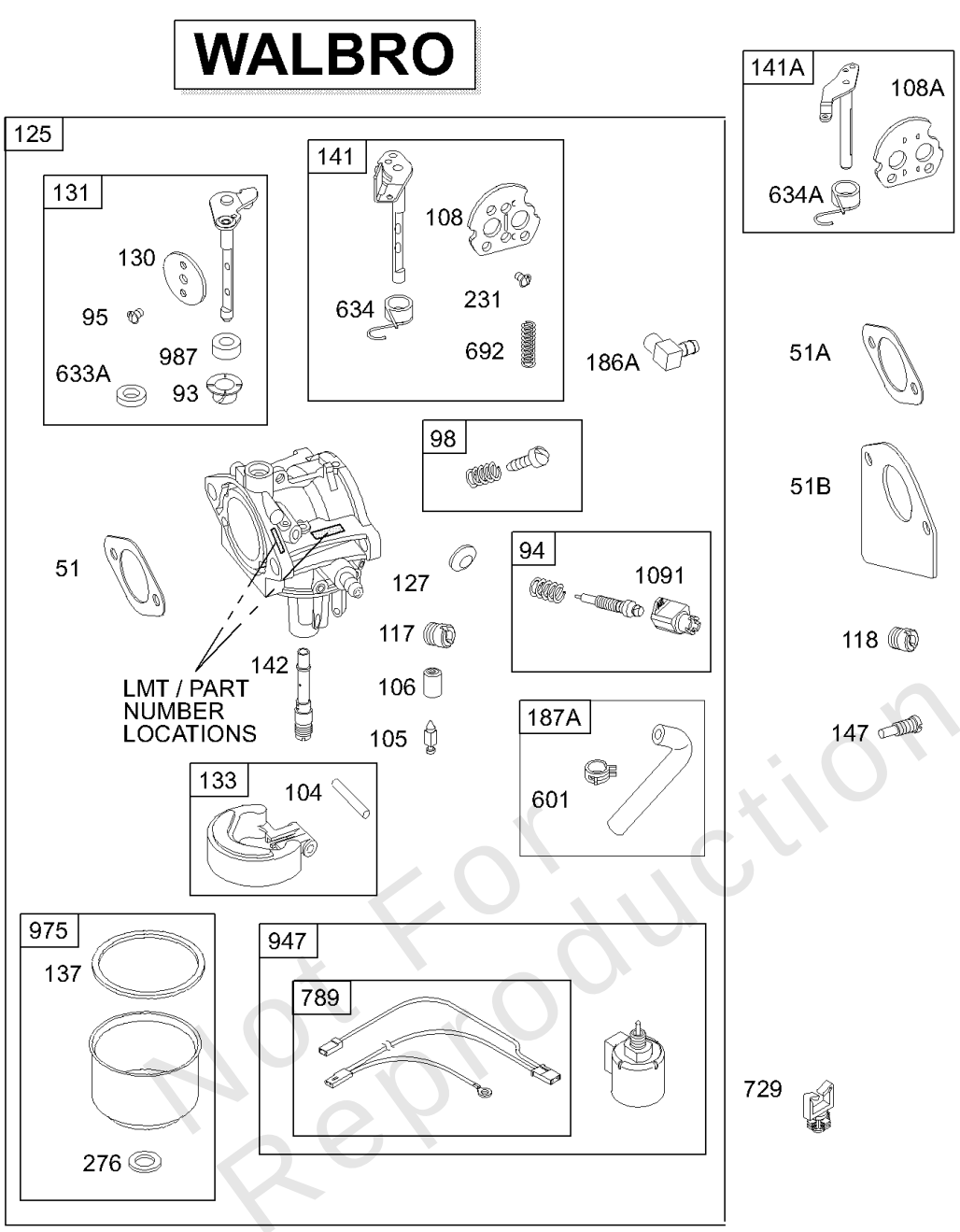

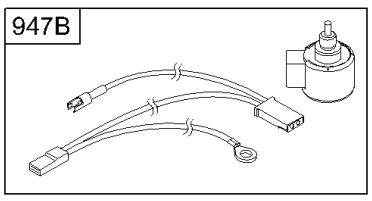

977 CARBURETOR GASKET SET

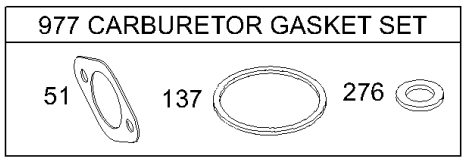

121 CARBURETOR OVERHAUL KIT

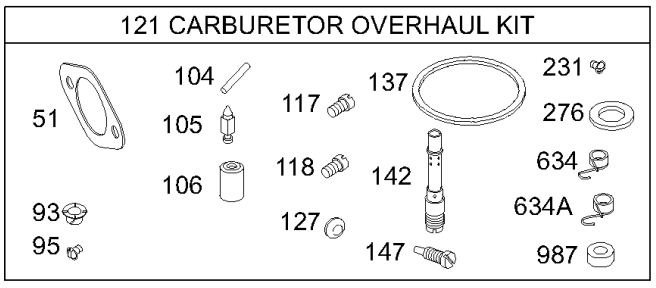

NIKKI

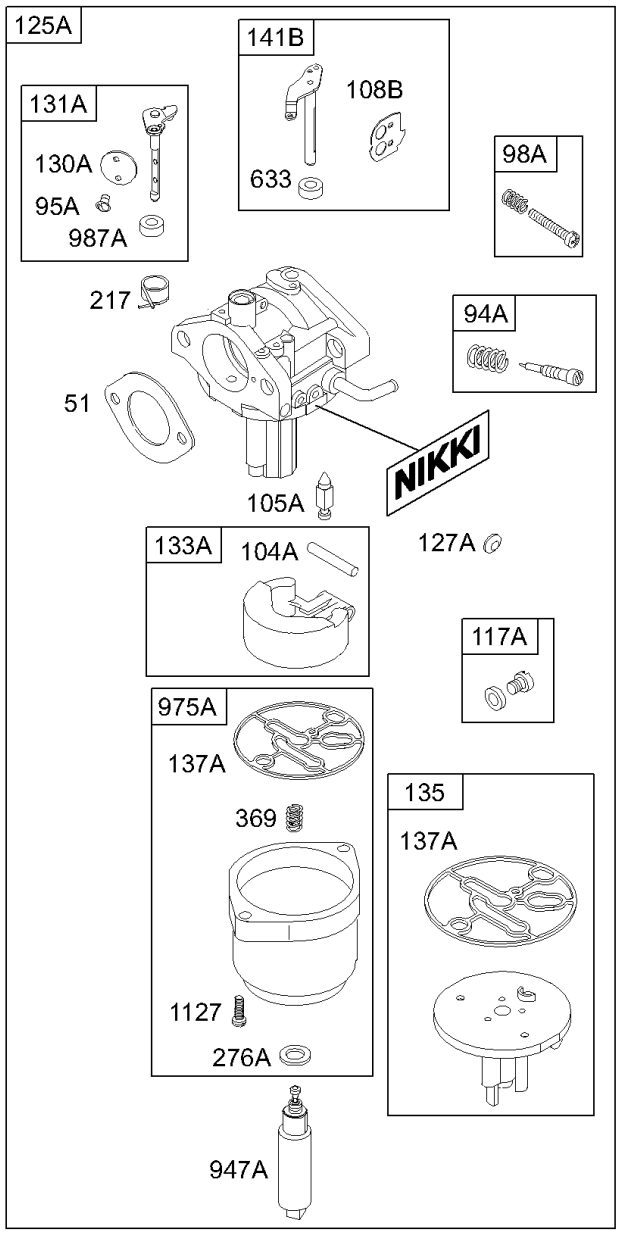

977A CARBURETOR GASKET SET

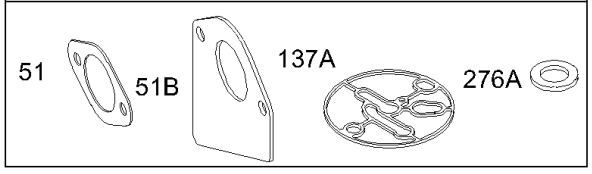

121A CARBURETOR OVERHAUL KIT

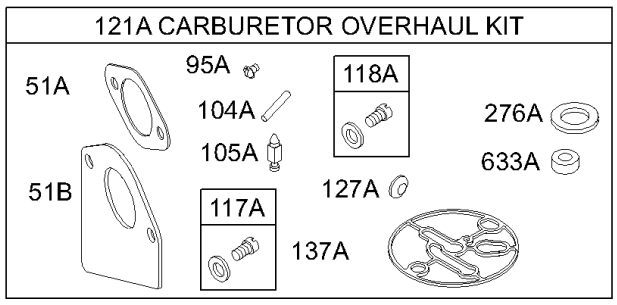

Not For Reproduction

Copyright © Briggs & Stratton. All Rights reserved

REF NO	PART NO	QTY	DESCRIPTION
51	692137		GASKET-INTAKE -Used After Code Date 97100500
51A	272569S		GASKET, Intake -Used Before Code Date 97100600
51B	692284		GASKET, Intake
93	690602		BUSHING, Throttle Shaft
94	498032		KIT, Idle Mixture -(LMT 121, 122, 125, 129, 130, 137, 138)
94	496589		KIT, Idle Mixture -(LMT 149, 150)
94	498030		KIT, Idle Mixture -(LMT 153, 154, 155, 156)
94A	695425		KIT, Idle Mixture
95	691636		SCREW -(Throttle Valve)
95A	690718		SCREW -(Throttle Valve)
98	495800		KIT, Idle Speed -(Idle Speed) (Lmt 54, 55, 91)
98A	695408		KIT, Idle Speed
104	690525		PIN, Float Hinge
104A	694918		PIN, Float Hinge
105	231855S		VALVE-FLOAT NEEDLE
105A	696136		VALVE, Float Needle
106	690577		SEAT, Inlet -(Gravity Feed)
106	691780		SEAT, Inlet -(Pump Feed)
108	690464		VALVE, Choke -(Used On Manual Choke)
108A	692344		VALVE, Choke -(Used On Choke A Matic)
108B	695419		VALVE, Choke
117	697228		JET, Main -(Standard) (LMT 33, 34, 73, 74, 76, 121, 122, 125, 126, 128, 129, 130, 132, 137, 138)
117	692408		JET, Main -(Standard) (LMT 149, 150, 153, 154, 155 and 697481, 697482)
117A	695415		JET, Main -(Standard)
118	692411		JET, Main -(High Altitude) (LMT 153, 154, 155, and 697481, 697482)
118	231850		JET, Main -(High Altitude) (LMT 33, 34, 73, 74, 76, 121, 122, 125, 126, 128, 129, 130, 132, 137, 138)
118	232116		JET, Main -(High Altitude) (LMT 149, 150)
118A	695416		JET, Main -(High Altitude)
121	498116		KIT, Carburetor Overhaul -Used Before Code Date 96072600
121	499233		KIT, Carburetor Overhaul -Used After Code Date 96072500 -Used Before Code Date 97100600
121	690191		KIT, Carburetor Overhaul -Used After Code Date 97100500
121A	695427		KIT, Carburetor Overhaul
125	698620		CARBURETOR -(Gravity Feed)

Not For Reproduction

Copyright © Briggs & Stratton. All Rights reserved

Mfg. No: 28N707-0129-01

WALBRO

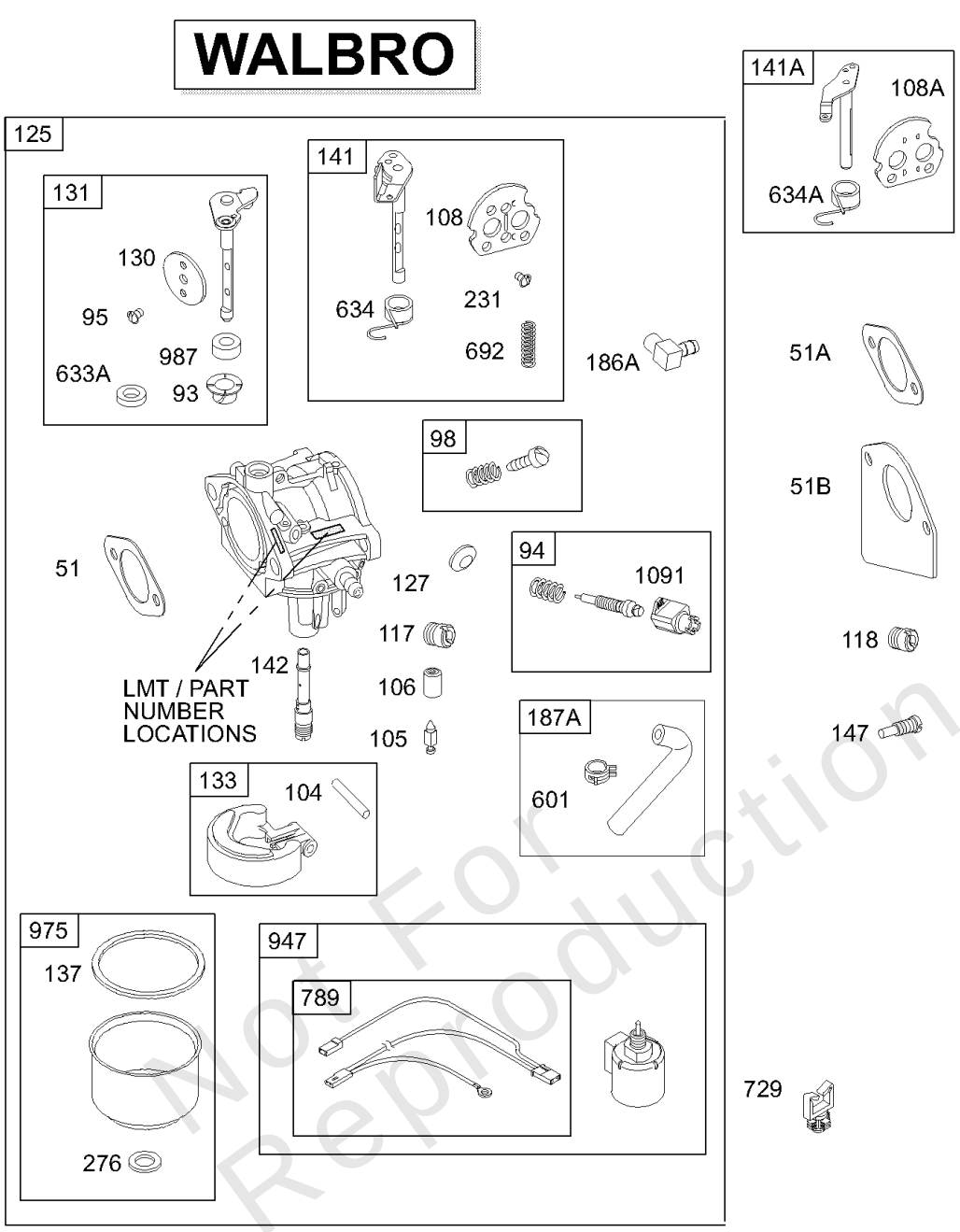

Not For Reproduction

NIKKI

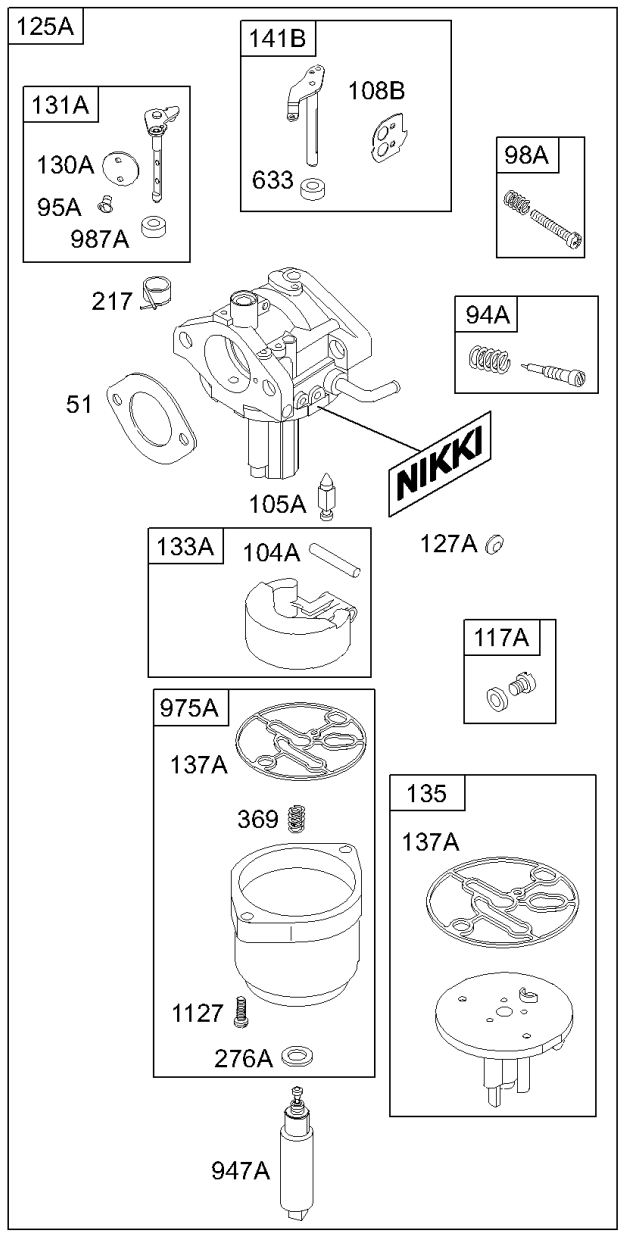

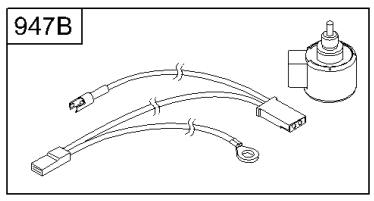

977 CARBURETOR GASKET SET

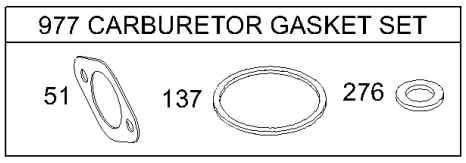

977A CARBURETOR GASKET SET

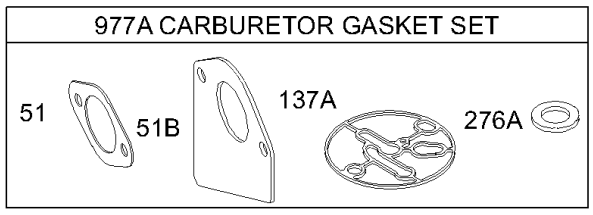

121 CARBURETOR OVERHAUL KIT

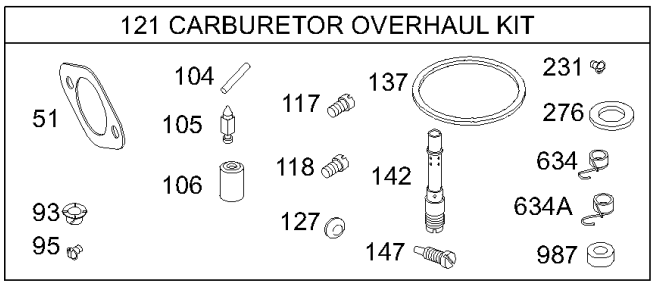

121A CARBURETOR OVERHAUL KIT

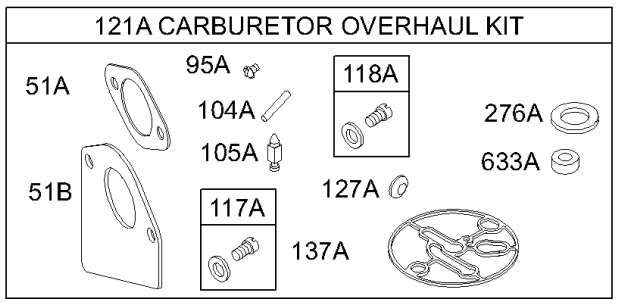

Copyright © Briggs & Stratton. All Rights reserved

Carburetor

REF NO	PART NO	QTY	DESCRIPTION
125A	-----		Carburetor -(Nikki Carburetor, Service With Walbro Carburetor) -Used After Code Date 02091500
125A	-----		Carburetor -(Nikki Carburetor, Service With Walbro Carburetor) -Used Before Code Date 02091600
127	695005		PLUG, Welch
127A	694530		PLUG, Welch
130	691750		VALVE, Throttle
130A	695418		VALVE, Throttle
131	494379		KIT, Throttle Shaft
131A	695421		KIT, Throttle Shaft
133	494381		FLOAT, Carburetor
133A	694914		FLOAT, Carburetor
135	696142		TUBE, Fuel Transfer
137	281165S		GASKET, Float Bowl
137A	695426		GASKET, Float Bowl
141	495097		KIT, Choke Shaft -(Manual Choke)
141A	495931		KIT, Choke Shaft -(Choke A Matic)
141B	695420		KIT, Choke Shaft
142	231990		NOZZLE, Carburetor -(Standard) (LMT 33, 34, 73, 74, 76, 121, 122, 125, 126, 128, 129, 130, 132, 137, 138)
142	692412		NOZZLE, Carburetor -(Standard) (LMT 149, 150, 153, 154, 155, 156)
147	497472		JET, Pilot -(LMT 33, 34)
147	231985		JET, Pilot -(LMT 73, 74, 121, 122, 125, 129, 130, 131, 132, 137, 138)
186A	692317		CONNECTOR-HOSE
187A	699332		LINE, Fuel -(Formed)(21)(Cut To Required Length)
187A	699331		LINE, Fuel -(Formed)(10-1/4 Inches)(Cut to Required Length)
217	695409		SPRING, Choke Return
231	691636		SCREW -(Choke Valve)
276	692255		WASHER, Sealing
276A	695410		WASHER, Sealing
369	695422		SPRING, Float Bowl
601	95162S		CLAMP, Hose
633	695414		SEAL, Choke/Throttle Shaft
633A	690998		SEAL, Choke/Throttle Shaft
634	690801		SPRING/SEAL ASSEMBLY -(Manual Choke)
634A	690802		SPRING/SEAL ASSEMBLY -(Choke A Matic)
692	690572		SPRING, Detent -(LMT 155, 156 And 697482, 697483)
729	691335		CLIP, Wire -(Fuel Solenoid)
789	692037		HARNESS-WIRING -(Fuel Solenoid)
947	692734		SOLENOID, Fuel
947A	695423		SOLENOID, Fuel

Not For Reproduction

Copyright © Briggs & Stratton. All Rights reserved

Mfg. No: 28N707-0129-01

WALBRO

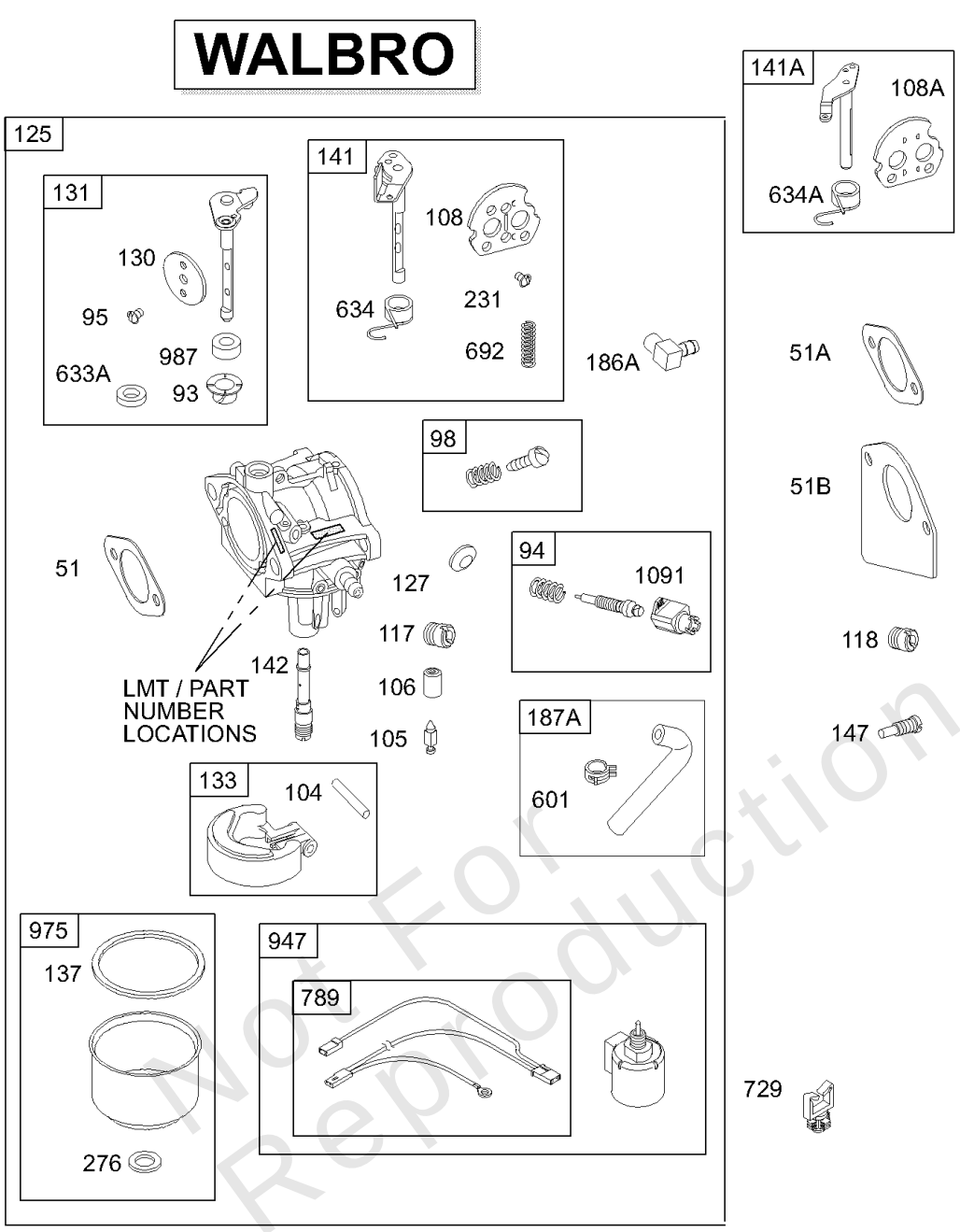

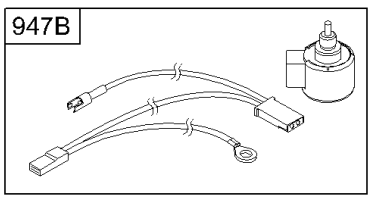

977 CARBURETOR GASKET SET

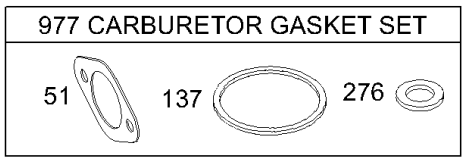

121 CARBURETOR OVERHAUL KIT

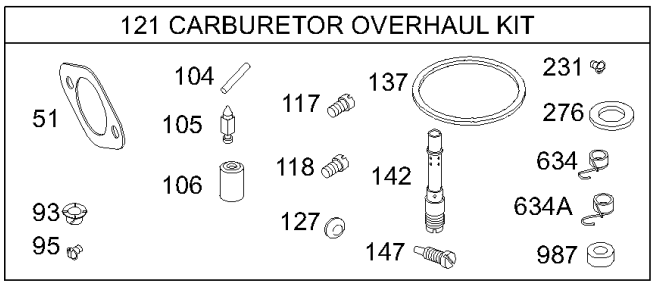

NIKKI

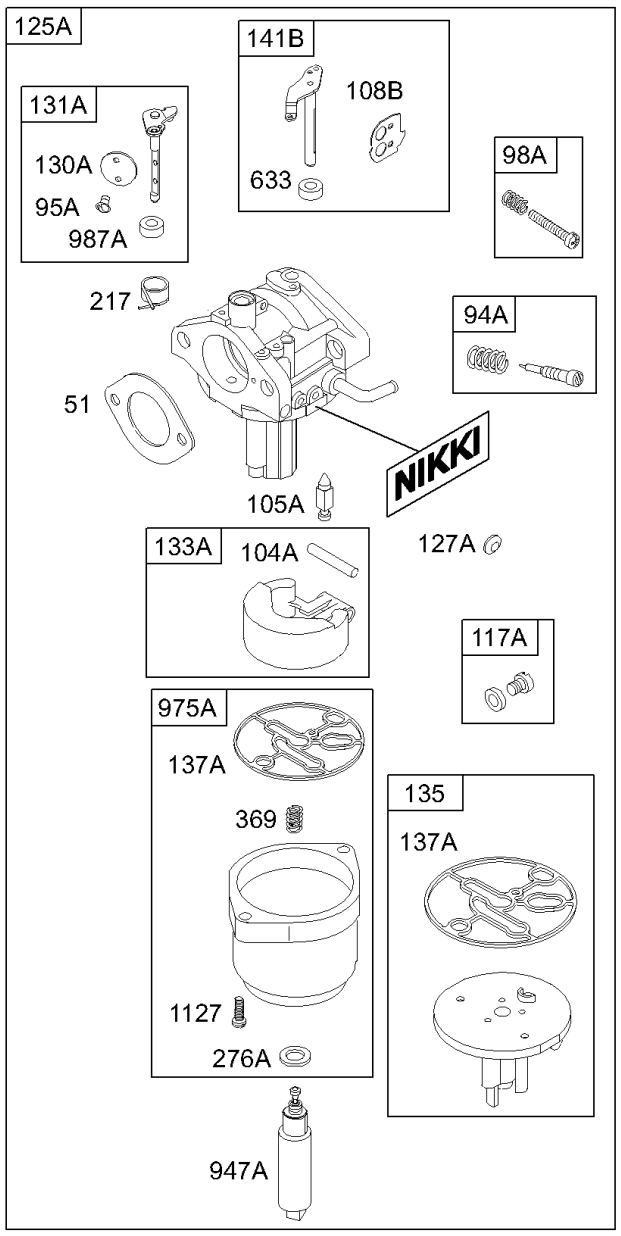

977A CARBURETOR GASKET SET

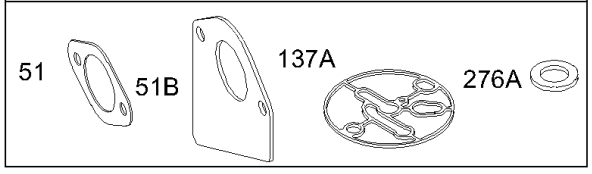

121A CARBURETOR OVERHAUL KIT

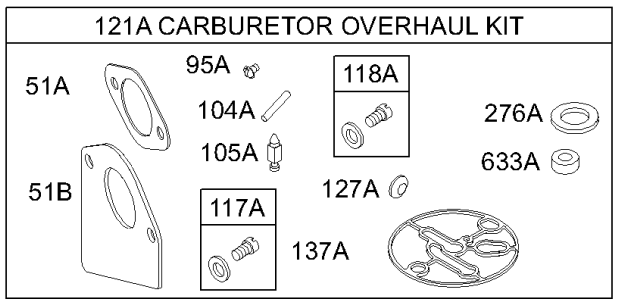

Not For Reproduction

Copyright © Briggs & Stratton. All Rights reserved

Carburetor

REF NO	PART NO	QTY	DESCRIPTION
947B	497672		SOLENOID, Fuel
975	495933		BOWL, Float -(Float Bowl)
975A	695417		BOWL, Float
977	690192		SET, Carburetor Gasket
977A	695428		SET, Carburetor Gasket
987	691326		SEAL, Choke/Throttle Shaft
987A	698777		SEAL, Choke/Throttle Shaft
1091	691333		CAP, Limiter
1127	695407		SCREW -(Float Bowl)

Not For Reproduction

Copyright © Briggs & Stratton. All Rights reserved

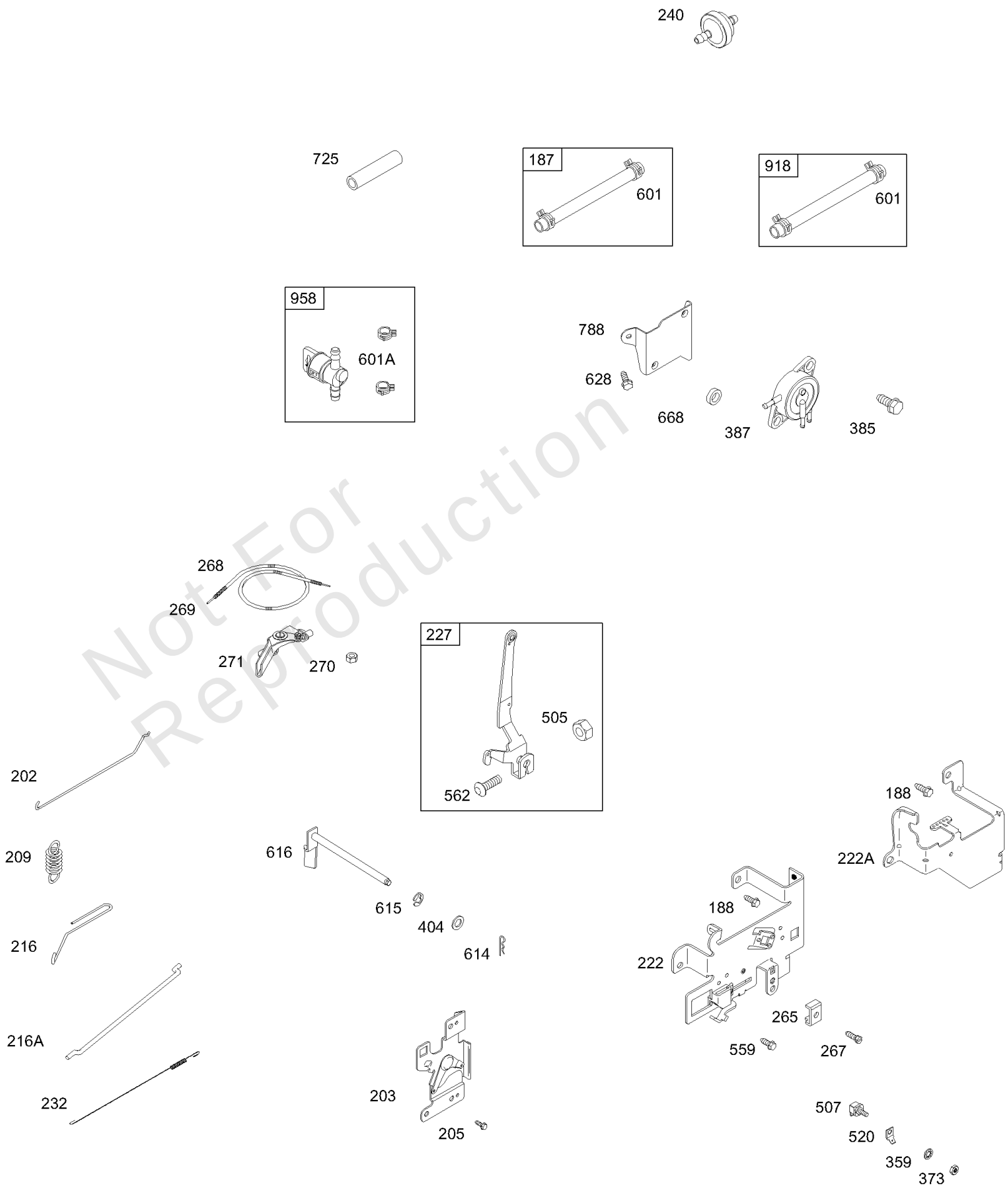

Not For Reproduction

Controls, Links, Springs, Fuel Pump, Fuel Hoses

REF NO	PART NO	QTY	DESCRIPTION
187	691050		LINE, Fuel -(Cut To Required Length)
188	691693		SCREW -(Control Bracket)
202	691841		LINK, Mechanical Governor
203	691381		CRANK, Bell
205	691693		SCREW -(Bell Crank)
209	691795		SPRING, Governor -(Yellow)
216	691840		LINK, Choke
216A	691281		LINK, Choke
222	694042		BRACKET, Control
227	691374		LEVER, Governor Control
232	691842		SPRING, Governor Link
240	298090S		FILTER, Fuel -(Red)
240	394358S		FILTER, Fuel -(White)
265	691024		CLAMP, Casing
267	690804		SCREW -(Casing Clamp)
268	691025		CASING, Control Wire -(Cut To Required Length)
269	691026		WIRE, Control -(Cut To Required Length)
270	691027		NUT -(Control Wire Casing)
271	691028		LEVER, Control
359	691077		WASHER -(Ground Terminal)
373	691612		NUT -(Ground Terminal)
385	691108		SCREW -(Fuel Pump)
387	808656		PUMP, Fuel
404	691691		WASHER -(Governor Crank)
505	691251		NUT -(Governor Control Lever)
507	691972		INSULATOR
520	691084		TERMINAL, Ground
559	690661		SCREW -(Remote Choke Stop)
562	691119		BOLT -(Governor Control Lever)
601	95162S		CLAMP, Hose
601A	691038		CLAMP, Hose -(Black)
614	691620		PIN, Cotter
615	93307		RETAINER, Governor Shaft
616	692012		CRANK, Governor
628	690661		SCREW -(Fuel Pump Bracket)
668	690510		SPACER -(Fuel Pump)
725	690403		SHIELD, Heat

Not For Reproduction

Copyright © Briggs & Stratton. All Rights reserved

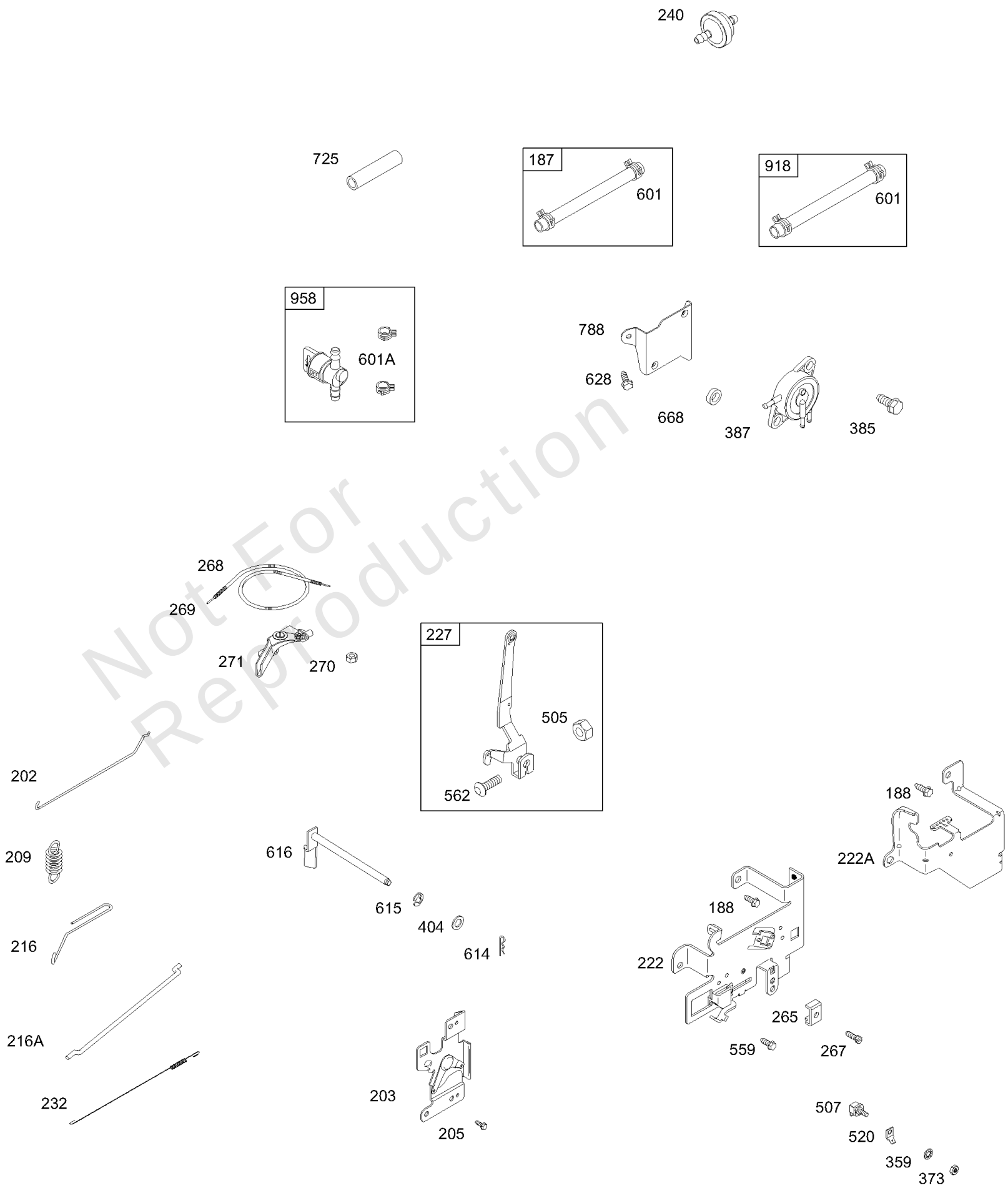

Not For Reproduction

Controls, Links, Springs, Fuel Pump, Fuel Hoses

REF NO	PART NO	QTY	DESCRIPTION
788	690458		BRACKET, Fuel Pump
918	393815		HOSE, Vacuum -(Cylinder To Impulse Pump)(Cut To Required Length)
958	698183		VALVE, Fuel Shut Off -(Plastic)

Not For Reproduction

Copyright © Briggs & Stratton. All Rights reserved

Crankcase Cover/Sump, Crankshaft, Cylinder, Piston/Rings, Connecting Rod

Mfg. No: 28N707-0129-01

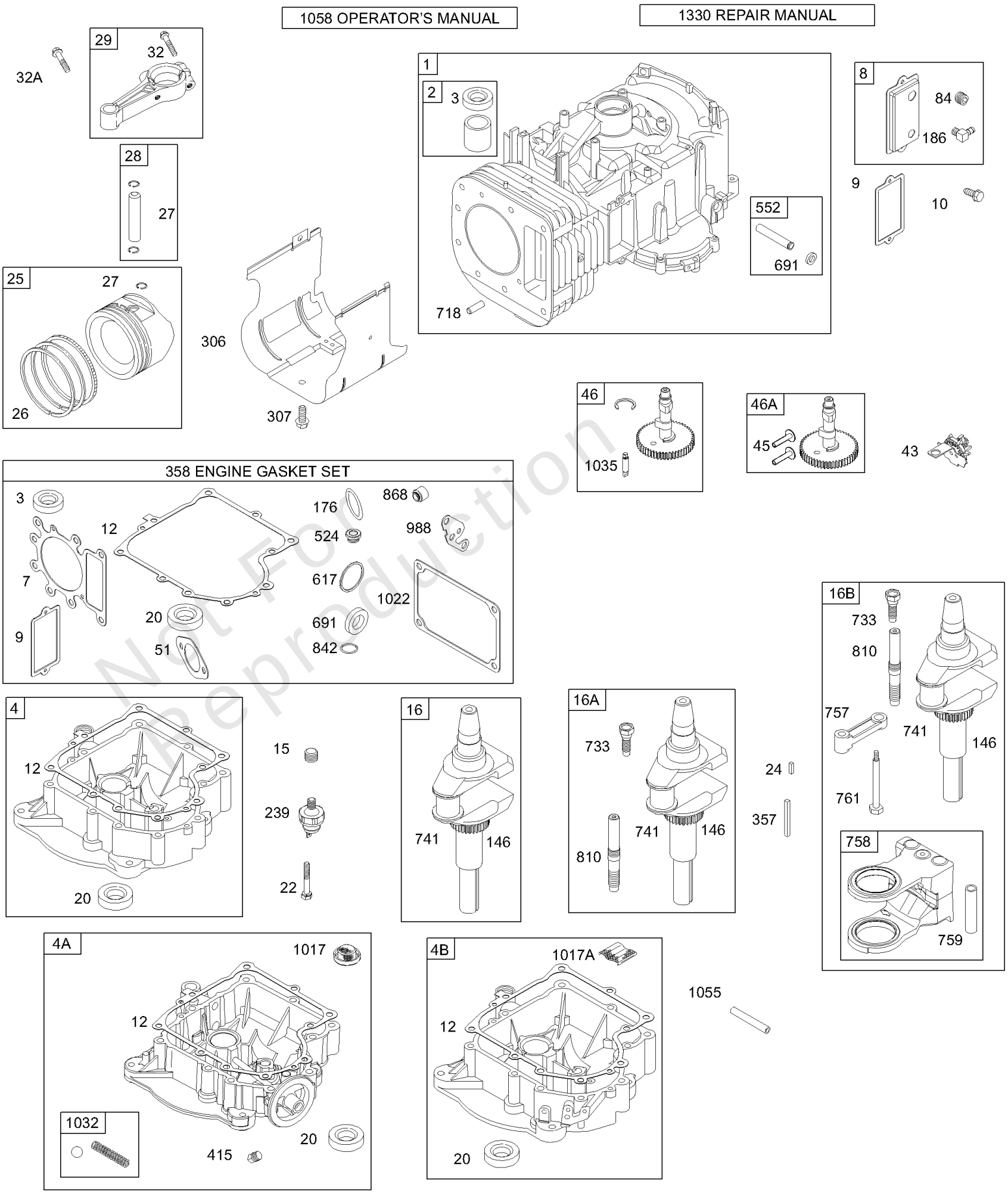

Not For Reproduction

Crankcase Cover/Sump, Crankshaft, Cylinder, Piston/Rings, Connecting Rod

REF NO	PART NO	QTY	DESCRIPTION
1	496412		CYLINDER ASSEMBLY
2	399265		KIT, Bushing/Seal -(Magneto Side)
3	391086S		SEAL, Oil -(Magneto Side)
4	494238		SUMP, Engine
7	273280S		GASKET, Cylinder Head
8	696126		BREATHER ASSEMBLY
9	27803S		GASKET, Breather
10	691666		SCREW -(Breather Assembly)
12	692226		GASKET, Crankcase -(.015)(Standard)
12	692405		GASKET, Crankcase -(.009)
12	692406		GASKET, Crankcase -(.005)
15	690946		PLUG, Oil Drain
16	690136		CRANKSHAFT
16A	693944		CRANKSHAFT -Used After Code Date 95073100
16B	693653		CRANKSHAFT -Used Before Code Date 95080100
20	291675S		SEAL, Oil -(PTO Side)
22	692125		SCREW -(Crankcase Cover/Sump)
24	222698S		KEY, Flywheel
25	499284		PISTON ASSEMBLY -(Standard) -Used Before Code Date 01041900
25	499292		PISTON ASSEMBLY -(.020 Oversize) -Used Before Code Date 01041900
25	696397		PISTON ASSEMBLY -(Standard) -Used After Code Date 01041800
25	696399		PISTON ASSEMBLY -(.020 Oversize) -Used After Code Date 01041800
25	696400		PISTON ASSEMBLY -(.030 Oversize) -Used After Code Date 01041800
26	696404		SET, Ring -(.010 Oversize) -Used After Code Date 01041800
26	696405		SET, Ring -(.020 Oversize) -Used After Code Date 01041800
26	696403		SET, Ring -(Standard) -Used After Code Date 01041800
26	495851		SET, Ring -(.020 Oversize) -Used Before Code Date 01041900
26	696406		SET, Ring -(.030 Oversize) -Used After Code Date 01041800
26	495854		SET, Ring -(Standard) -Used Before Code Date 01041900

Not For Reproduction

Copyright © Briggs & Stratton. All Rights reserved

Crankcase Cover/Sump, Crankshaft, Cylinder, Piston/Rings, Connecting Rod

Mfg. No: 28N707-0129-01

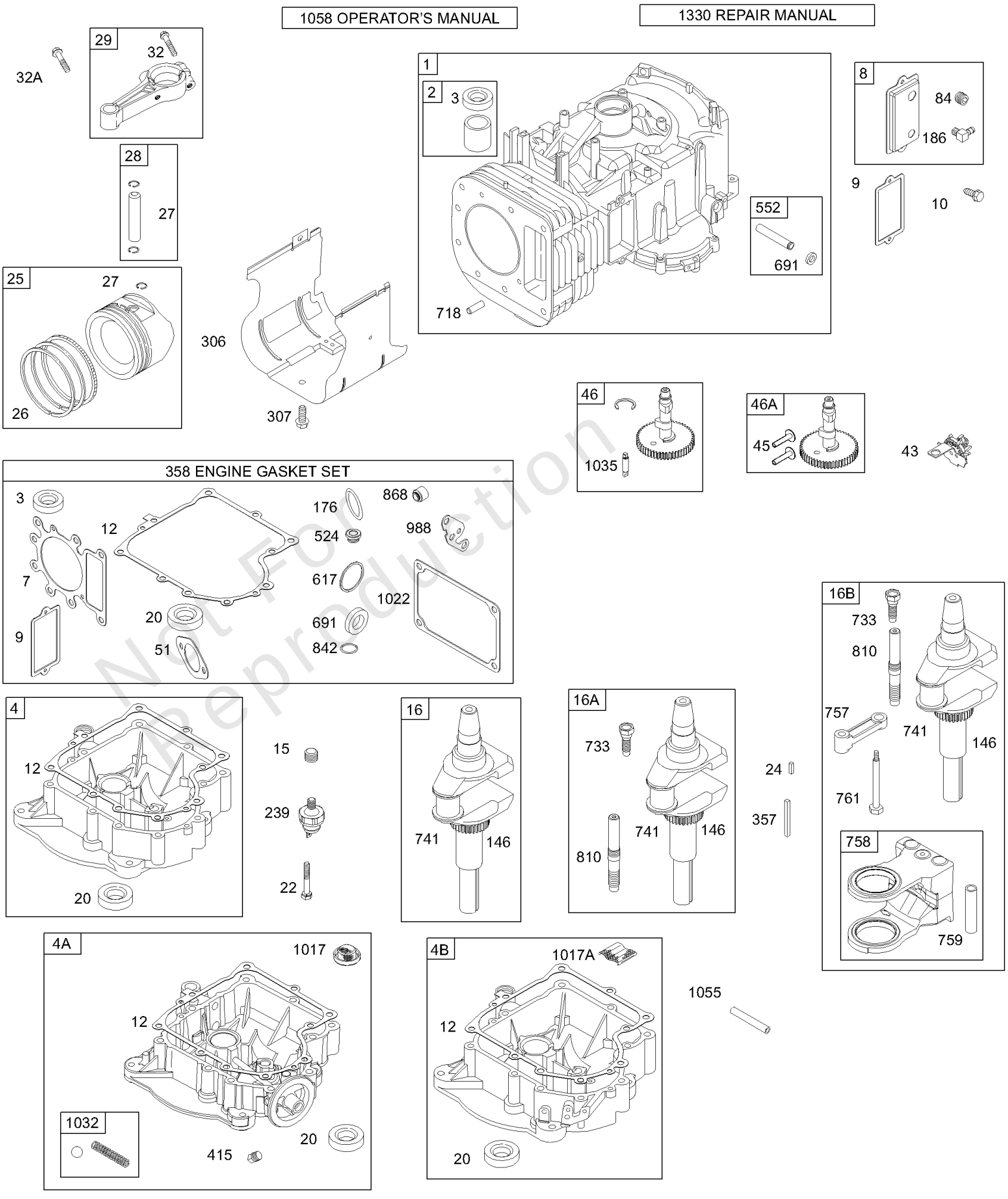

Not For Reproduction

REF NO	PART NO	QTY	DESCRIPTION
26	495855		SET, Ring -(.030 Oversize) -Used Before Code Date 01041900
27	691792		LOCK, Piston Pin -Used Before Code Date 95101600
27	691299		LOCK, Piston Pin -Used After Code Date 95101500
28	498320		PIN, Piston -(.005 Oversize) -Used After Code Date 95101500
28	299691		PIN, Piston -(Standard) -Used Before Code Date 95101600
28	391286		PIN, Piston -(.005 Oversize) -Used Before Code Date 95101600
28	498319		PIN, Piston -(Standard) -Used After Code Date 95101500
29	692420		ROD, Connecting -(.020 Undersize) -Used After Code Date 98063000
29	494504S		ROD, Connecting -(Standard) -Used Before Code Date 98070100
29	495490		ROD, Connecting -(.020 Undersize) -Used Before Code Date 98070100
29	692419		ROD, Connecting -(Standard) -Used After Code Date 98063000
32	692852		SCREW -(Connecting Rod) (1 5/8) -Used After Code Date 98063000
32	690356		SCREW -(Connecting Rod) (1 7/8) -Used Before Code Date 98070100
32A	690348		SCREW -(Connecting Rod) (1 5/8)
43	691968		SLINGER, Governor/Oil
45	690564		TAPPET, Valve
46	698492		CAMSHAFT -Used After Code Date 98063000
46A	790340		CAMSHAFT -(-Used After Code Date 98070100) (Used on Type No (s) 0103, 0119, 0130, 0174 0642)
51	692137		GASKET-INTAKE
84	690343		PLUG, Oil Drain
146	691639		KEY, Woodruff
176	691917		SEAL, O-Ring -(Air Cleaner Base)
186	691609		CONNECTOR, Hose
306	698454		SHIELD-CYLINDER
307	691003		SCREW -(Cylinder Shield)
357	691483		KEY, Drive Pulley
358	495993		GASKET SET, Engine -Used Before Code Date 97100600
358	691580		GASKET SET, Engine -Used After Code Date 97100500

Not For Reproduction

Copyright © Briggs & Stratton. All Rights reserved

Crankcase Cover/Sump, Crankshaft, Cylinder, Piston/Rings, Connecting Rod

Mfg. No: 28N707-0129-01

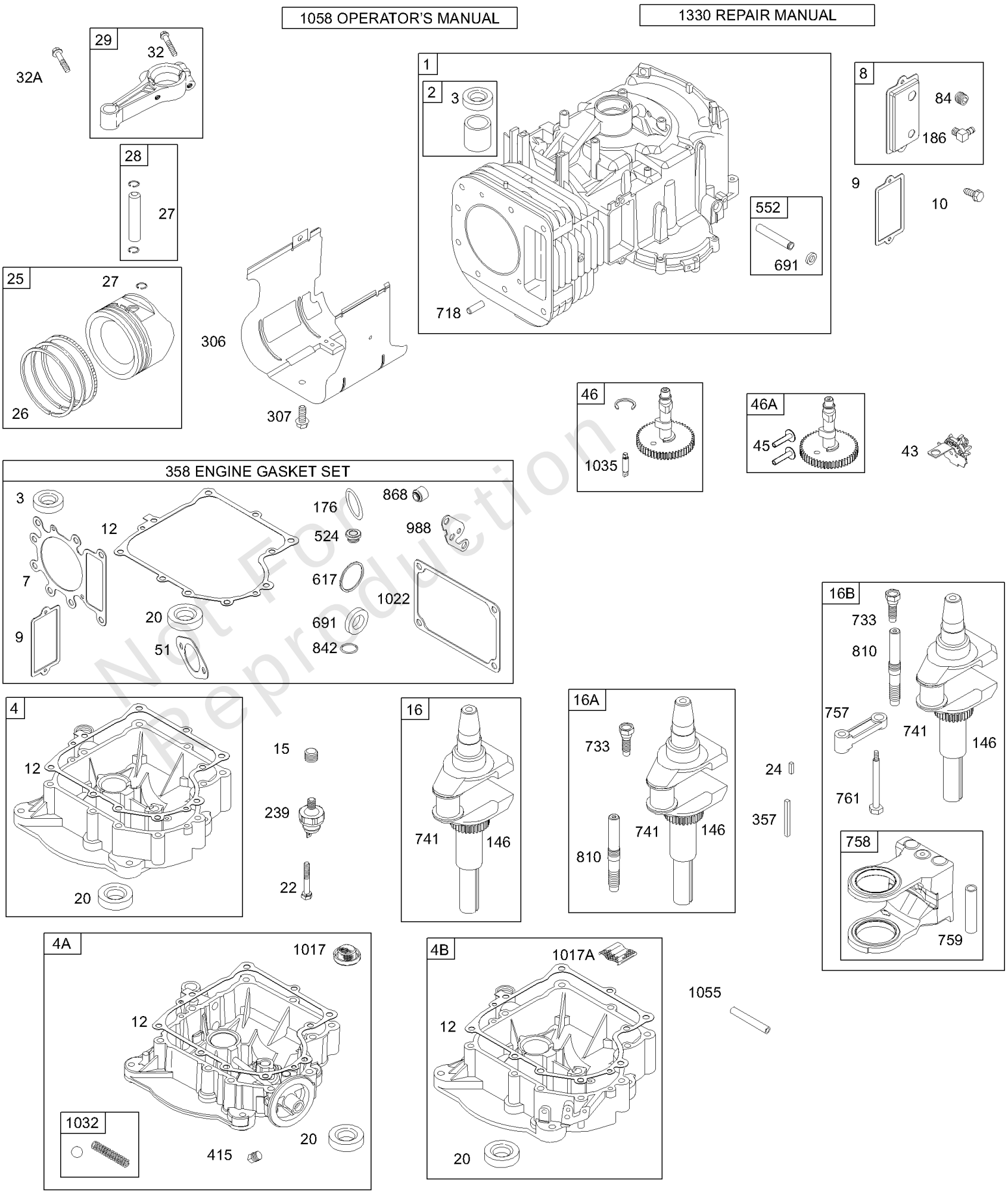

Not For Reproduction

Crankcase Cover/Sump, Crankshaft, Cylinder, Piston/Rings, Connecting Rod

REF NO	PART NO	QTY	DESCRIPTION
415	690283		PLUG, Oil -(1/8 Standard)
524	281370S		SEAL, Dipstick Tube -(Dipstick Tube)
552	491986		BUSHING, Governor Crank -(1/4 I.D.)
617	692138		SEAL, O-Ring -(Intake Manifold) -Used After Code Date 97100500
691	692407		SEAL, Governor Shaft
718	690959		PIN, Locating
733	691658		SCREW -(Crankshaft Extension)
741	691284		GEAR, Timing
757	691714		LINK, Counterweight -(-Used After Code Date 78100411)
758	692423		COUNTERWEIGHT
759	691239		PIN, Counterweight
761	691096		SCREW -(Counterweight)
810	691779		EXTENSION, Crankshaft
842	691870		SEAL, O-Ring -(Dipstick Tube)
868	690968		SEAL, Valve
988	691317		GASKET, Oil Adapter
1017A	691216		SCREEN, Oil Pump
1022	272475S		GASKET, Rocker Cover
1032	491710		SPRING, Compression
1035	693784		SHAFT, Pump
1055	690528		TUBE, Oil Pump
1058	275935		MANUAL, Operator's
1330	272147		MANUAL, Repair

Not For Reproduction

Copyright © Briggs & Stratton. All Rights reserved

Cylinder Head, Rocker Cover, Intake Manifold, Oil Pump, Oil Filter

Mfg. No: 28N707-0129-01

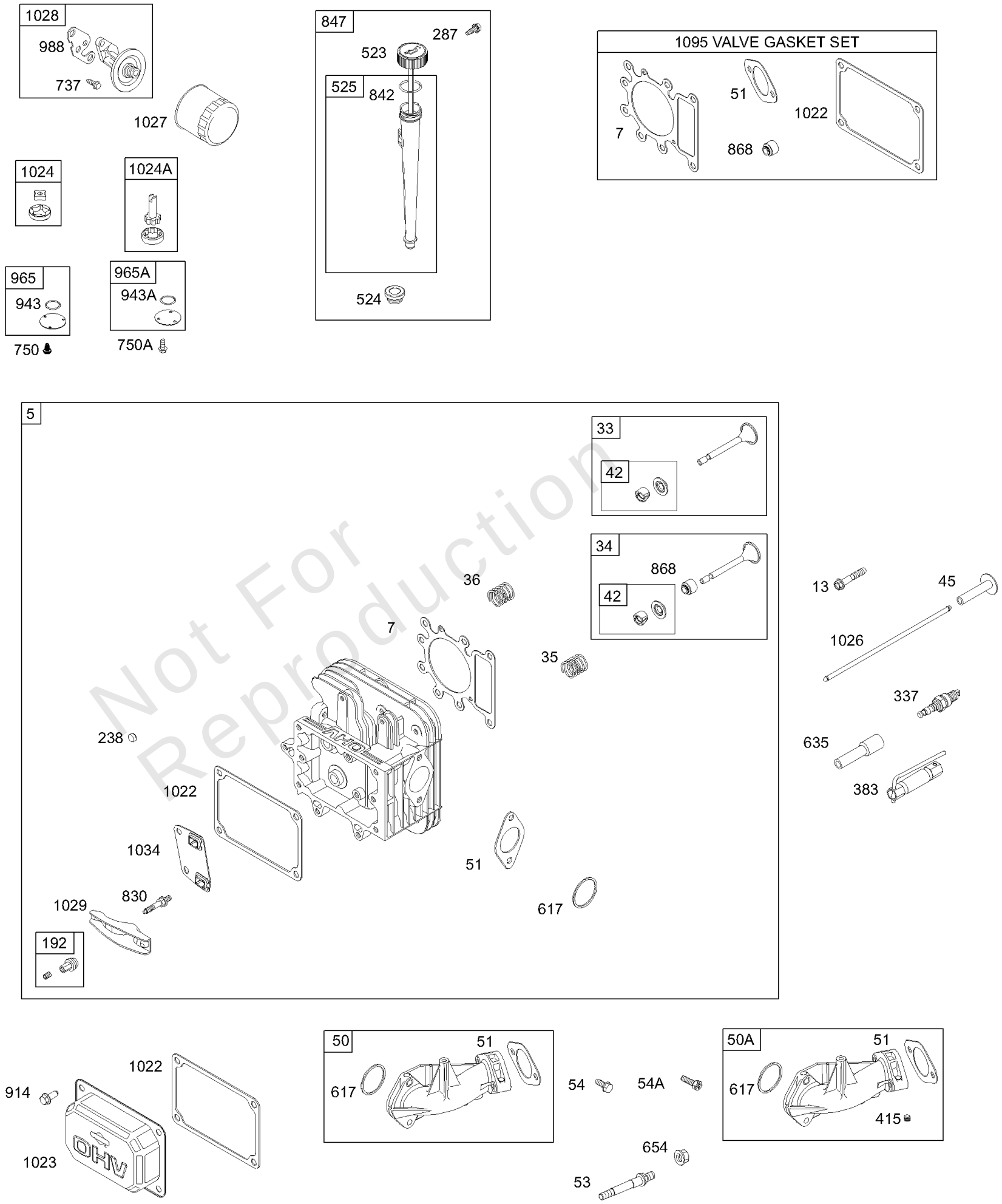

Not For Reproduction

Cylinder Head, Rocker Cover, Intake Manifold, Oil Pump, Oil Filter

REF NO	PART NO	QTY	DESCRIPTION
5	698148		HEAD, Cylinder
7	273280S		GASKET, Cylinder Head
13	690360		SCREW -(Cylinder Head)
33	695760		VALVE, Exhaust
34	695761		VALVE, Intake
35	691279		SPRING, Valve -(Intake)
36	691279		SPRING, Valve -(Exhaust)
42	499586		KEEPER, Valve
45	690564		TAPPET, Valve
50	690193		MANIFOLD, Intake
51	692137		GASKET-INTAKE -Used After Code Date 97100500
53	690227		STUD -(Carburetor)
54	691148		SCREW -(Intake Manifold) -Used After Code Date 97100500
54A	690953		SCREW -(Intake Manifold) -Used Before Code Date 97100600
192	691986		ADJUSTER, Rocker Arm
238	691843		CAP, Valve
287	691002		SCREW -(Dipstick Tube)
337	491055S		PLUG, Spark
337	84007216	1	PLUG, SPARK -(China Only)
383	89838S		WRENCH, Spark Plug
415	690283		PLUG, Oil -(1/8 Standard)
523	692014		DIPSTICK
524	281370S		SEAL, Dipstick Tube -(Dipstick Tube)
525	691398		TUBE, Dipstick
617	692138		SEAL, O-Ring -(Intake Manifold) -Used After Code Date 97100500
635	691909		BOOT, Spark Plug
654	690958		NUT -(Carburetor)
737	691118		SCREW -(Oil Filter Adapter)
830	691095		STUD, Rocker Arm
842	691870		SEAL, O-Ring -(Dipstick Tube)
847	496415		DIPSTICK/TUBE ASSEMBLY
868	690968		SEAL, Valve
914	691108		SCREW -(Rocker Cover)
988	691317		GASKET, Oil Adapter
1022	272475S		GASKET, Rocker Cover
1023	691192		COVER, Rocker
1026	692011		ROD, Push -(Exhaust)

Not For Reproduction

Copyright © Briggs & Stratton. All Rights reserved

Cylinder Head, Rocker Cover, Intake Manifold, Oil Pump, Oil Filter

Mfg. No: 28N707-0129-01

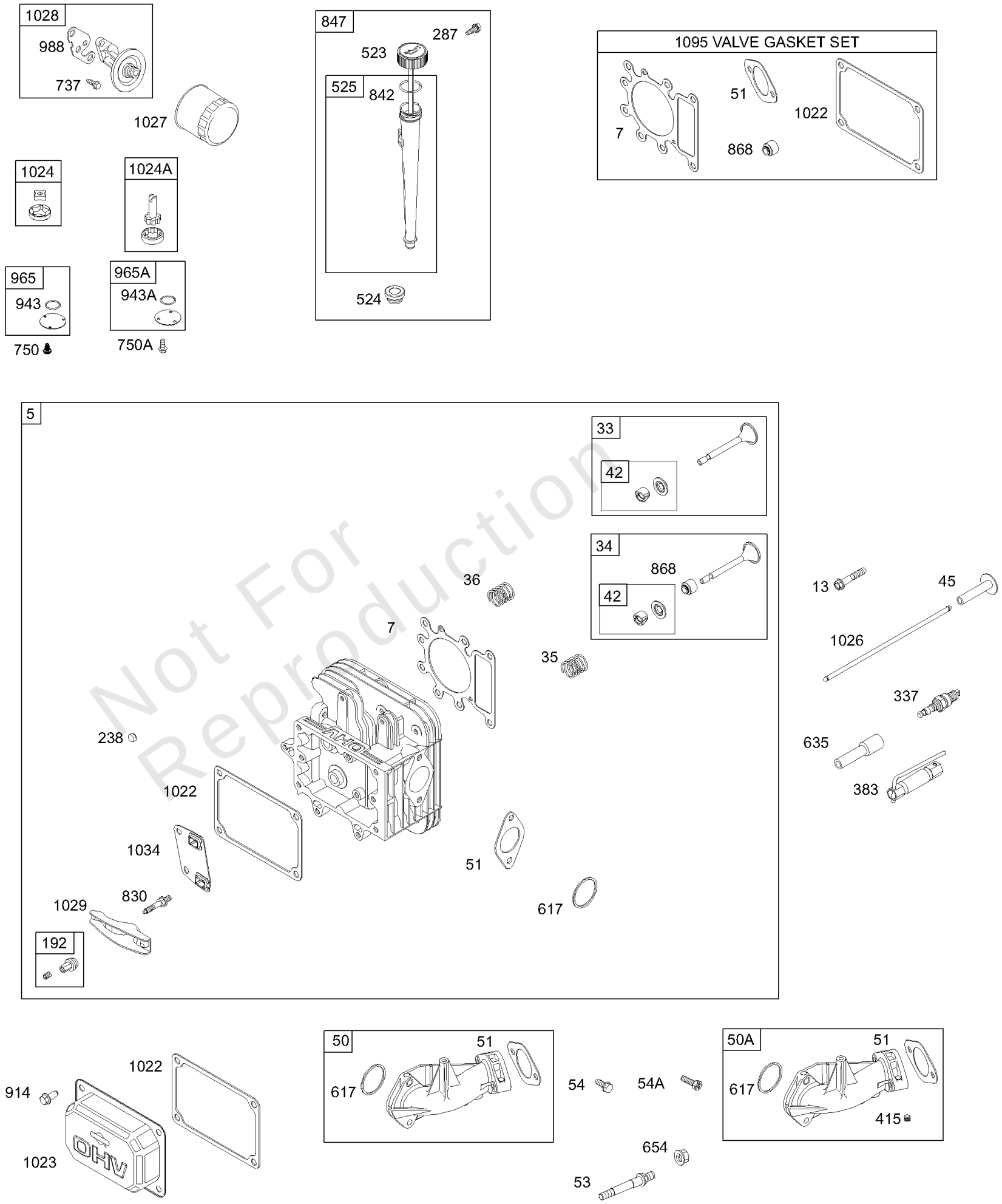

Not For Reproduction

Cylinder Head, Rocker Cover, Intake Manifold, Oil Pump, Oil Filter

REF NO	PART NO	QTY	DESCRIPTION
1026	692003		ROD, Push -(Intake)
1027	492932S		FILTER, Oil
1028	496744		ADAPTER, Oil Filter
1029	691751		ARM, Rocker
1034	690822		GUIDE, Push Rod
1095	691581		GASKET SET, Valve -Used After Code Date 97100500
1095	495992		GASKET SET, Valve -Used Before Code Date 97100600

Not For Reproduction

Copyright © Briggs & Stratton. All Rights reserved

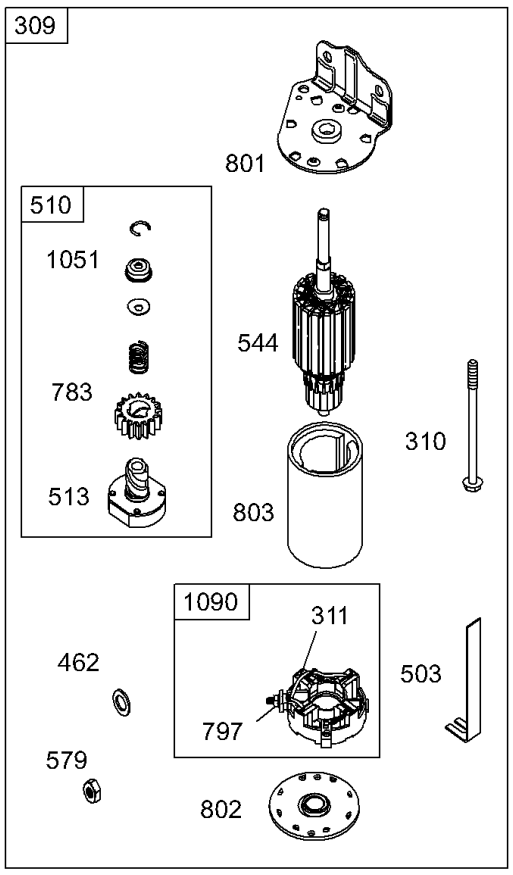

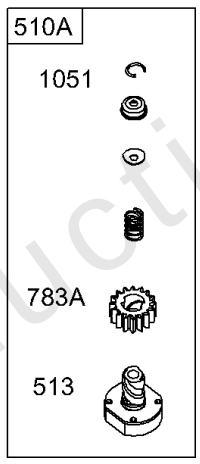

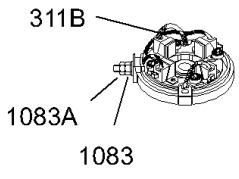

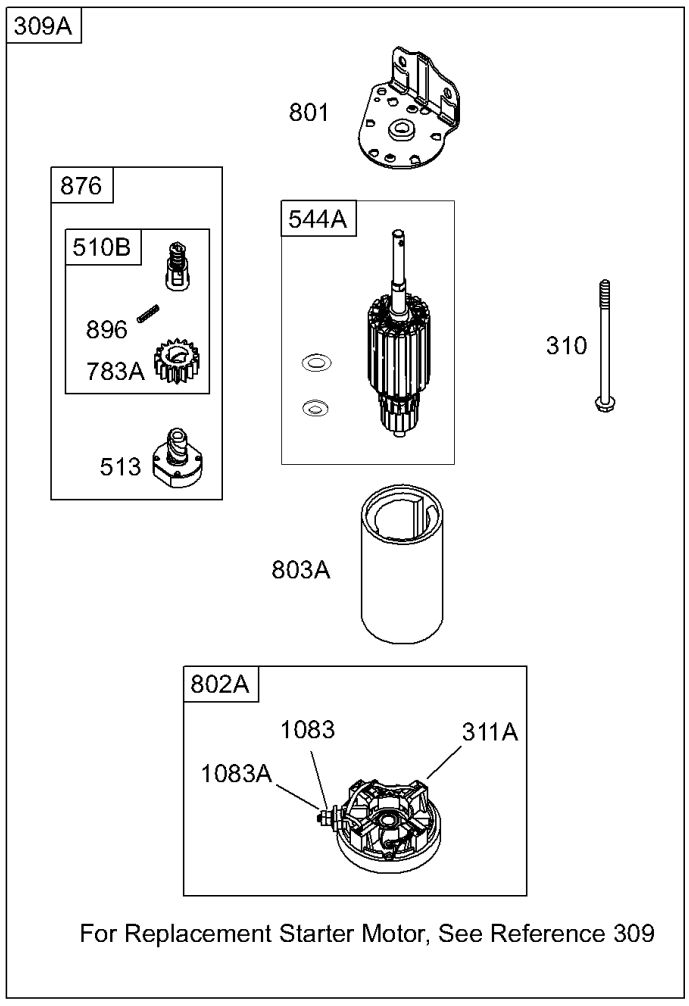

Not For Reproduction

Electric Starter

REF NO	PART NO	QTY	DESCRIPTION
309	693054		MOTOR, Starter -(3 5/8) (Aluminum Ring Gear)
309	693551		MOTOR, Starter -(3 5/8 Housing Length For Steel Ring Gear Only)
309	693552		MOTOR, Starter -(4 3/8 Housing Length For Steel Ring Gear Only)
309	497401		MOTOR, Starter -(4 3/8 Housing Length For Plastic Ring Gear Only)
309	497595		MOTOR, Starter -(3 5/8) (Plastic Ring Gear)
309	499521		MOTOR, Starter -(4 3/8 Housing Length For Aluminum Ring Gear Only)
309A	-----		Motor-Starter -(For Replacement Starter Motor, Order Reference 309)
310	690323		SCREW -(Starter Motor) (3 5/8" Housing Length)
310	691263		BOLT -(Starter Motor) (4 3/8 Housing)
310	692329		BOLT -(Starter Motor) (4 9/16 Housing)
311	497608		SET, Brush
311A	395538		SET, Brush -(3 5/8 Housing)
311B	490311		SET, Brush -(4 9/16 Housing)
462	691261		WASHER -(Starter Cable)
503	691532		STRAP, Starter
510	693699		DRIVE, Starter -(Steel Ring Gear)
510A	696541		DRIVE, Starter -(Used With Aluminum And Plastic Ring Gears)
510B	696540		DRIVE, Starter
513	692024		CLUTCH, Drive
544	692034		ARMATURE, Starter -(3 5/8 Housing)
544A	390837		ARMATURE, Starter -(3 5/8 Housing)
544A	490309		ARMATURE, Starter -(4 3/8 Housing)
579	691029		NUT -(Starter Cable)
697	690372		SCREW -(Drive Cap)
697A	691058		SCREW -(Drive Cap)
729A	224723		CLIP, Wire
783	693713		GEAR, Pinion -(Steel Ring Gear)
783A	695708		GEAR-PINION -(Plastic Ring Gear)
797	693167		NUT -(Brush Retainer)
801	691283		CAP, Drive
802	691286		CAP, End
802A	395537		CAP, End -(3 5/8 Housing)
803	693757		HOUSING, Starter -(3-5/8 Housing)(4 3/8 Housing Length Serviced By ReferenceNumber 309)

Not For Reproduction

Copyright © Briggs & Stratton. All Rights reserved

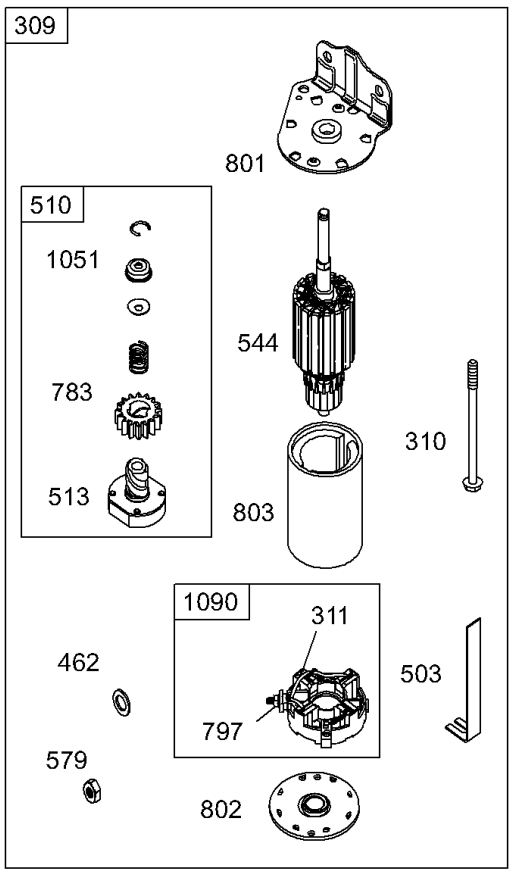

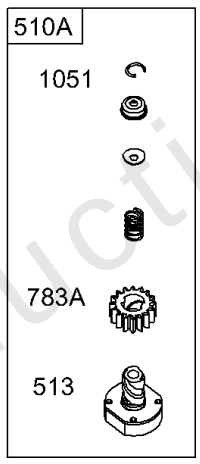

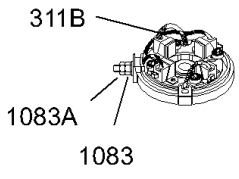

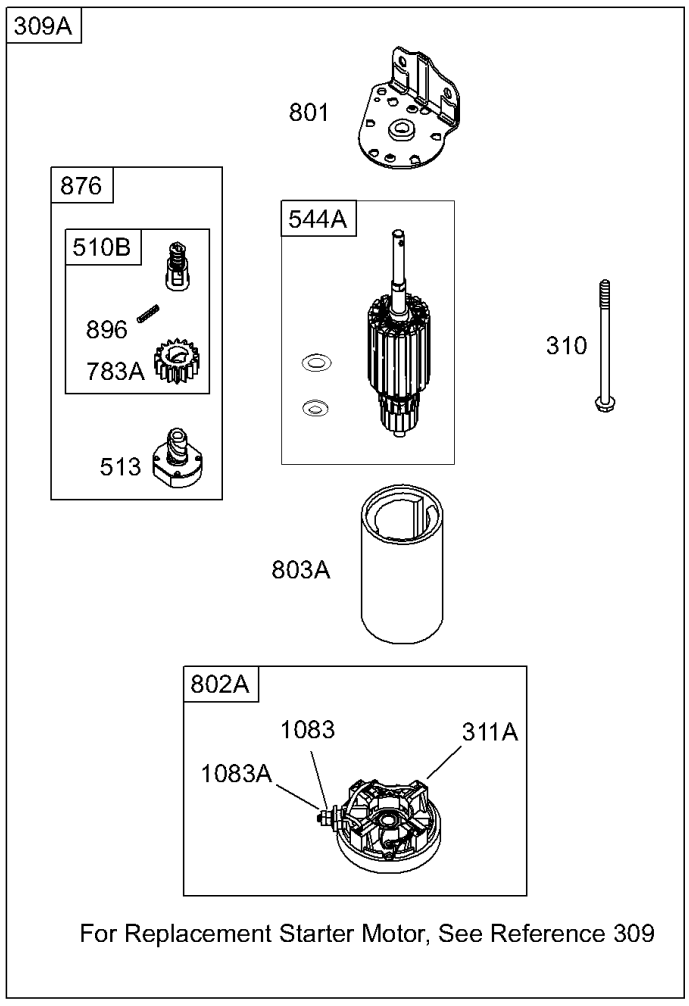

Not For Reproduction

Electric Starter

REF NO	PART NO	QTY	DESCRIPTION
803A	494205		HOUSING, Starter -(4 3/8 Housing)
803A	398159		HOUSING, Starter -(3 5/8 Housing)
876	696539		KIT, Pinion Spring
896	691641		PIN, Drive Retainer
1051	691265		RING, Retaining
1083	690958		NUT -(End Cap) (Serrated)
1083A	691626		NUT -(End Cap)
1090	691293		RETAINER, Brush

Not For Reproduction

Copyright © Briggs & Stratton. All Rights reserved

Flywheel Fan, Rotating Screen, Flywheel, Rewind Starter

Mfg. No: 28N707-0129-01

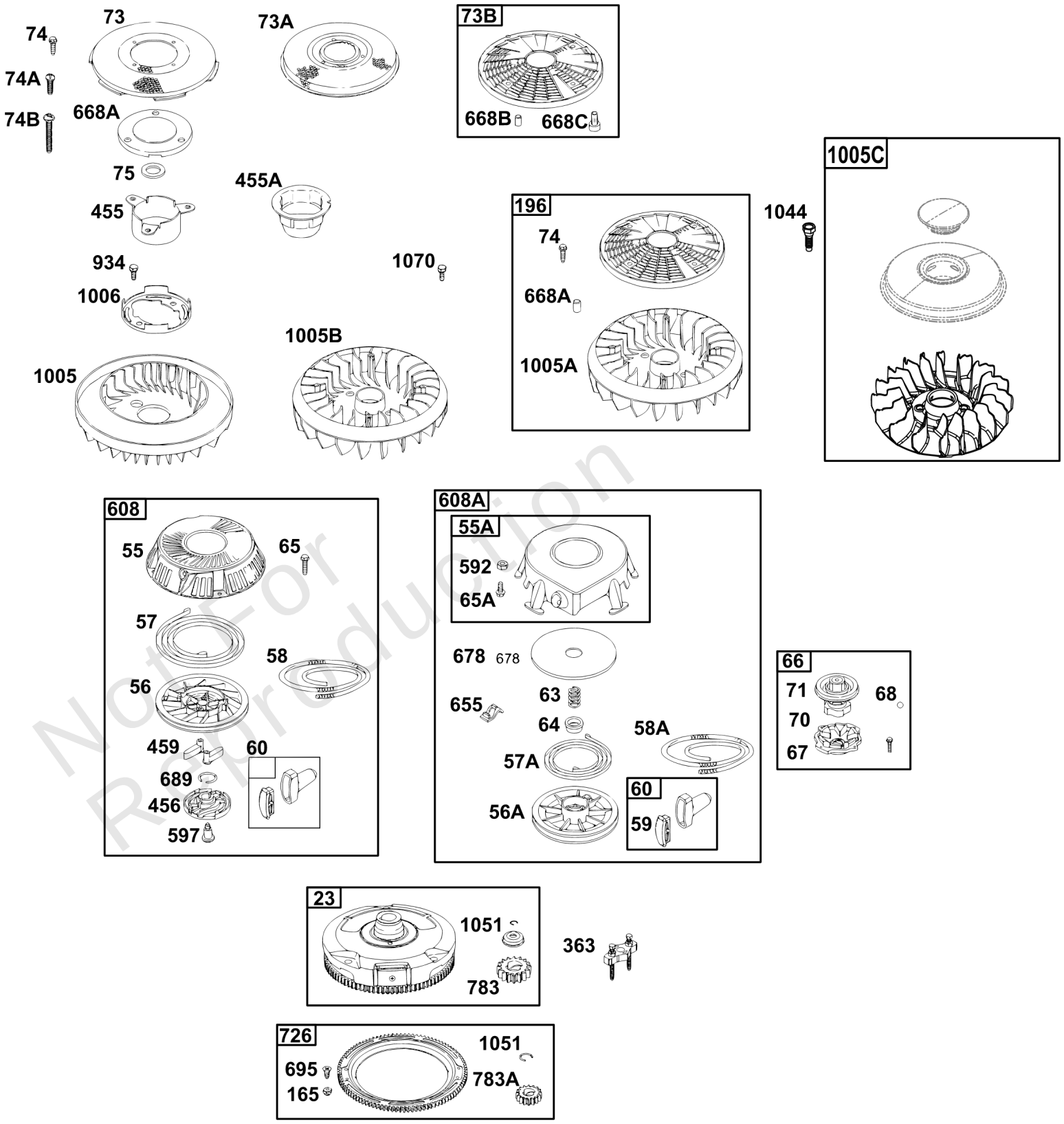

Not For Reproduction

Flywheel Fan, Rotating Screen, Flywheel, Rewind Starter

REF NO	PART NO	QTY	DESCRIPTION
23	693556		FLYWHEEL -(Steel Ring Gear)
55	695130		HOUSING, Rewind Starter
55A	393576		HOUSING, Rewind Starter
56	695129		PULLEY, Starter
56A	295871		PULLEY, Starter -(63 Rope)
57	695131		SPRING, Rewind Starter
57A	490179		SPRING-REWIND STR
58	695132		ROPE, Starter -(59" Long)
58A	695002		ROPE, Starter -(99)(Cut to Required Length)
59	490653		INSERT, Grip
60	494212		GRIP, Starter Rope
60A	490652		GRIP-STARTER ROPE
63	690547		SPRING, Ratchet
64	691920		ADAPTER, Ratchet Spring
65	690837		SCREW -(Rewind Starter)
65A	695453		SCREW -(Rewind Starter)
66	399671		CLUTCH-STARTER
67	394897		HOUSING, Clutch
68	691604		BALL, Clutch
70	691945		RATCHET-CLUTCH
71	691359		COVER, Ratchet
73	691191		SCREEN-ROTATING
73A	690492		SCREEN, Rotating
73B	494439		SCREEN, Rotating
74	691627		SCREW -(Rotating Screen)
74A	691655		SCREW -(Rotating Screen)
74B	691674		SCREW -(Rotating Screen) -Used Before Code Date 00040300
74B	698425		SCREW -(Rotating Screen) -Used After Code Date 00040200
75	690582		WASHER -(Flywheel)
165	693148		NUT -(Ring Gear)
196	695493		FAN/SCREEN ASSEMBLY
363	19203		PULLER, Flywheel
455	691173		CUP, Flywheel
456	695128		PLATE, Pawl Friction
459	281505S		PAWL-RATCHET
592	690800		NUT -(Rewind Starter)
597	691696		SCREW -(Pawl Friction Plate)
608A	390391		STARTER, Rewind
655	691734		ANCHOR-REWIND SPRING
668A	691323		SPACER

Not For Reproduction

Copyright © Briggs & Stratton. All Rights reserved

Flywheel Fan, Rotating Screen, Flywheel, Rewind Starter

Mfg. No: 28N707-0129-01

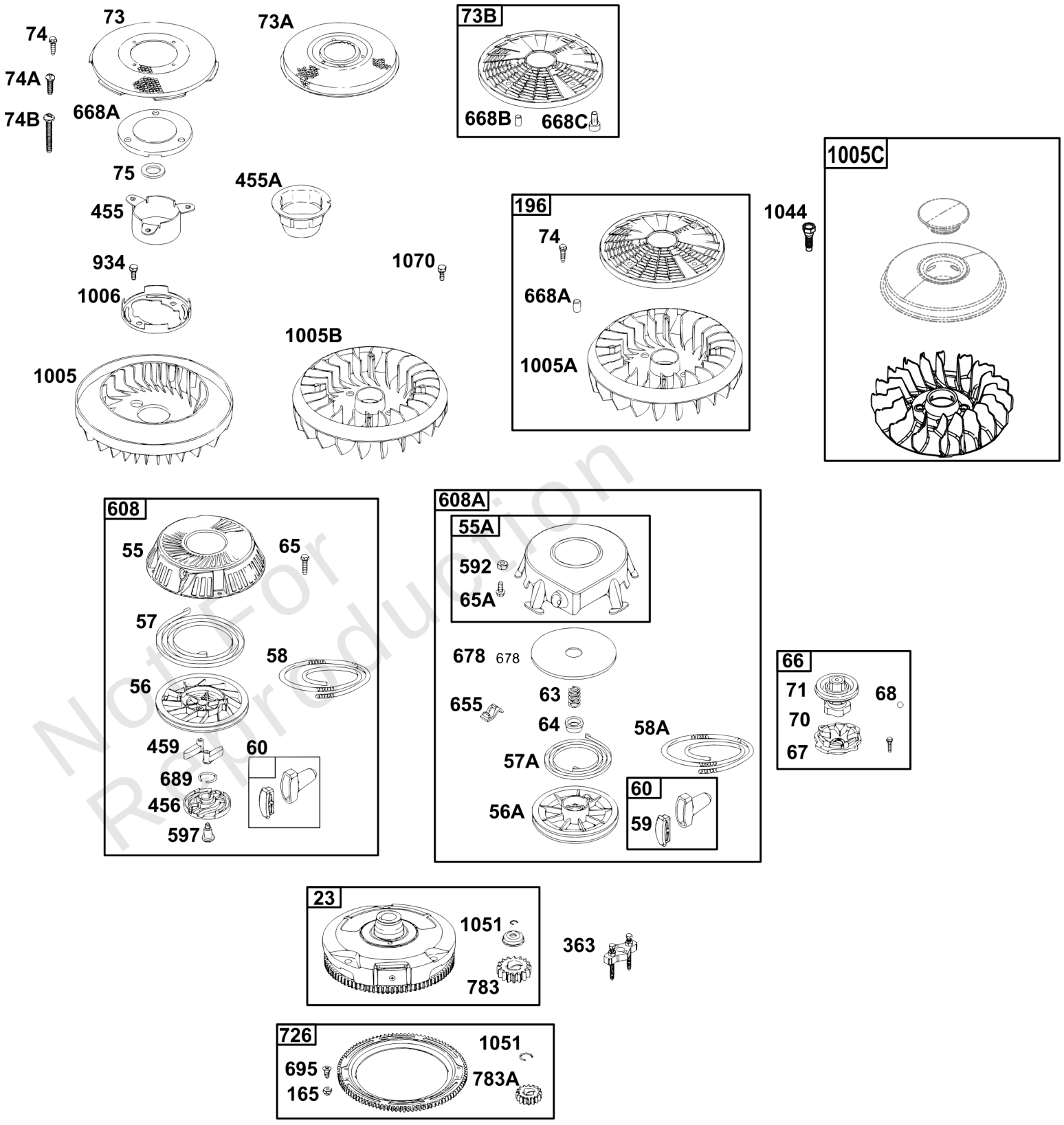

Not For Reproduction

Flywheel Fan, Rotating Screen, Flywheel, Rewind Starter

REF NO	PART NO	QTY	DESCRIPTION
668B	691215		SPACER -(Rotating Screen)
668C	691500		SPACER -(Rotating Screen)
678	490817		SPACER-REWIND -(Rewind)
689	691855		SPRING-FRICTION
695	693109		SCREW -(Ring Gear)
726	696537		GEAR, Ring -(Aluminum)(Services Plastic Ring Gear Only)
783	693713		GEAR, Pinion -(Steel Ring Gear)
783A	695708		GEAR-PINION -(Plastic Ring Gear)
934	691058		SCREW -(Fan Retainer)
1005	691905		FAN, Flywheel
1005A	697853		FAN, Flywheel
1005C	796201		FAN-FLYWHEEL -Used Before Code Date 07040900
1006	690452		RETAINER, Fan
1044	698139		SCREW -(Flywheel)
1051	691265		RING, Retaining
1070	690372		SCREW -(Flywheel Fan)

Not For Reproduction

Replacement Engine - Europe, Middle East & Africa

REF NO	PART NO	QTY	DESCRIPTION
	31R5070011B5CC0001		Replacement Engine
	697761		Replacement Short Block
	-----		Top No-Load Speed: 2800
	-----		Service Note: 9A REGULATED ALTERNATOR
	-----		Service Note: CHOKE-A-MATIC
	-----		Service Note: ELECTRIC START
	-----		Service Note: NO FUEL PUMP

Not For Reproduction

Copyright © Briggs & Stratton. All Rights reserved

Replacement Engine - US & Canada

REF NO	PART NO	QTY	DESCRIPTION
	31A6073026	1	Replacement Engine
	697761	1	Replacement Short Block
	-----		Top No-Load Speed: 3200 -Trim: ALL
	-----		Service Note: If the replacement engine supersedes to or is a Model 310000 series engine, refer to the illustrations located after the conversion data for this model series. The overall dimensions which differ, are shown in the illustrations.
	-----		Service Note: If after making a visual inspection and it is determined the Model 310000 series engine cannot be used because of equipment interference, the original engine should be repaired with a short block and/or individual parts.
	-----		Service Note: Transfer Muffler and/or Spark Arrester Assembly from the original engine if suitable for additional service or add new parts as required
	-----		Service Note: Transfer Alternator Assembly from original engine to replacement engine.
	-----		Short Block Note: If repair would also require the Cylinder Head Assembly Order Short Block Part Number 791116.

Not For Reproduction

Copyright © Briggs & Stratton. All Rights reserved