MASSEY FERGUSON

Parts Manual

Mfg. No: 2691361-01

MF2000, 22 Gross HP B&S Hydro and 46" Mower Deck (CE/Export)

Copyright © Briggs & Stratton. All Rights reserved

22-Jun-2026

Model Components

Page

46" & 52" Mower Deck - Clutch Group. 4
46" & 52" Mower Deck - Height Adjust & Roller Group. 6
46" & 52" Mower Deck - Housing, Arbors & Blades Group. 8
Controls Group. 12
Decals Group. 14
Electrical Group. 16
Engine Group - 22, 23 & 25 Gross HP Briggs & Stratton. 20
Frame & Front Axle Group. 24
Hood, Grille & Dash Group. 26
Lift Group - Manual. 28
Seat Deck & Fuel Tank Group. 30
Steering Group. 32
Transmission Group - Hydro Gear. 34
Transmission SERVICE PARTS - Hydro-Gear. 36
Wheels & Tires Group. 40
Torque Specification Chart. 42

Not For Reproduction

Copyright © Briggs & Stratton. All Rights reserved

46" & 52" Mower Deck - Clutch Group

Note: Unless noted otherwise, use the standard torque specifications

Mfg. No: 2691361-01

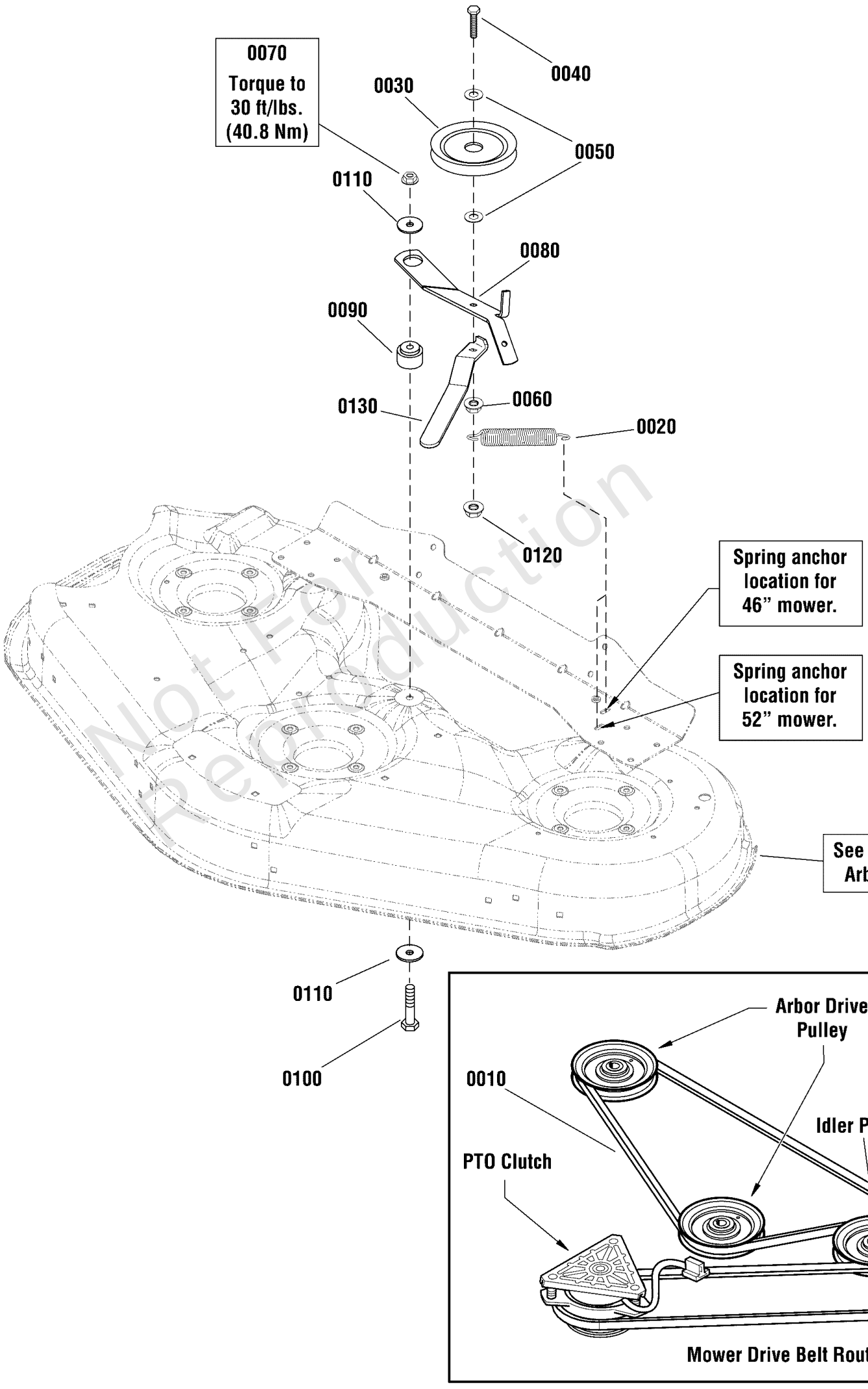

Not For Reproduction

Copyright © Briggs & Stratton. All Rights reserved

46" & 52" Mower Deck - Clutch Group

REF NO	PART NO	QTY	DESCRIPTION
0010	1732956SM	1	V-BELT, Arbor Drive, .44" A-Wedge Deep-Groove -(Use on 46" Decks)
0020	1715772SM	1	SPRING, Extension
0030	1736540YP	1	PULLEY, Idler
0040	1933685SM	1	CAPSCREW, Hex Head, 3/8-16 x 2-1/2 G5
0050	1922755SM	2	WASHER, 3/8
0060	703333	1	NUT, 3/8-16
0070	703893	2	NUT, CNTR LCK, 3/8-16
0080	1736551AYP	1	ARM, Idler
0090	1729007SM	1	SPACER, 1-1/2
0100	1923701SM	1	CAPSCREW, Hex Head, 3/8-16 x 2 G5
0110	1924356SM	2	WASHER, 3/8
0120	703347	1	NUT, 3/8-16
0130	1755653BMYP	1	HANDLE, Idler Arm

Not For Reproduction

Copyright © Briggs & Stratton. All Rights reserved

46" & 52" Mower Deck - Height Adjust & Roller Group

Note: Unless noted otherwise, use the standard torque specifications

Mfg. No: 2691361-01

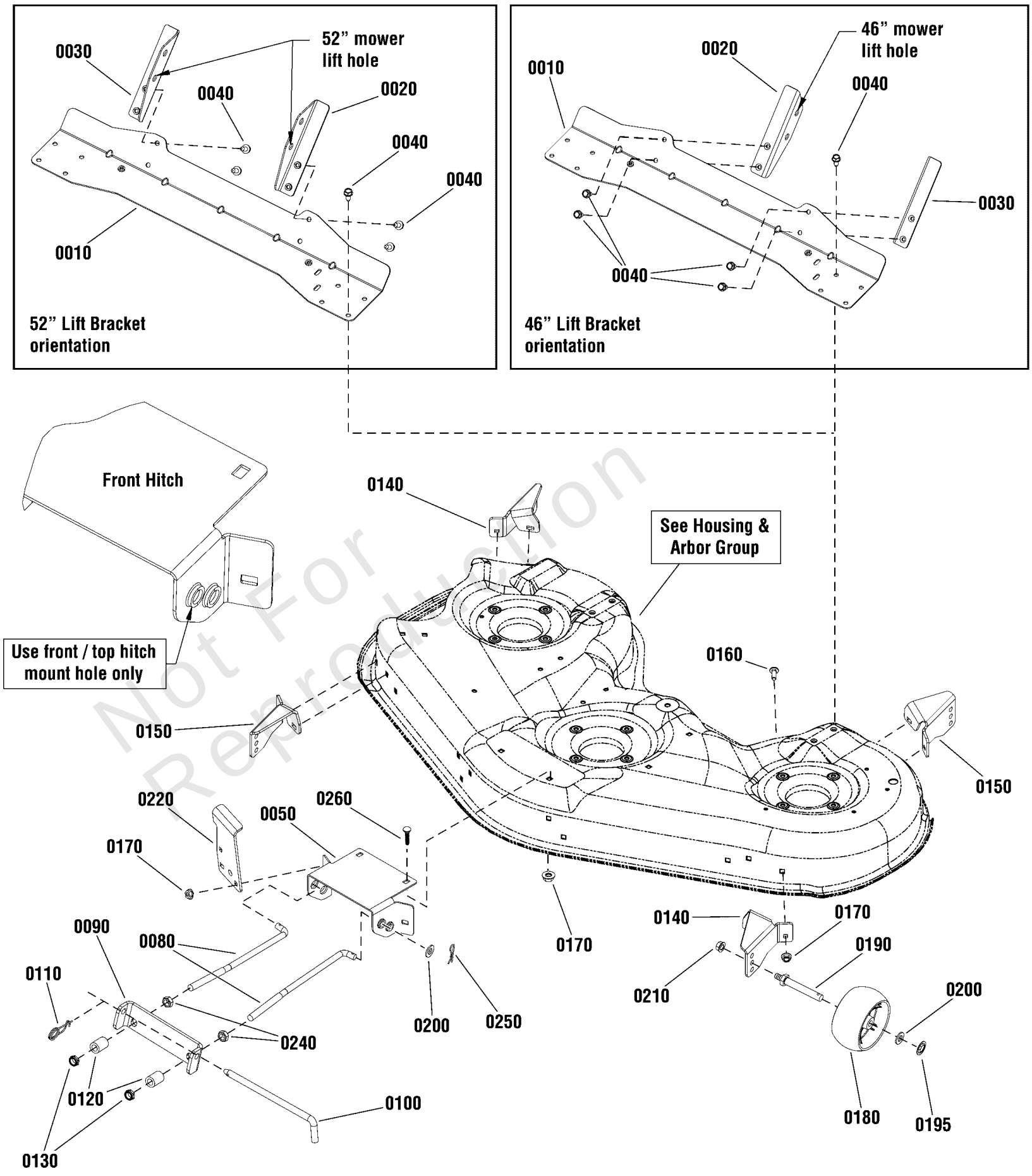

Not For Reproduction

Copyright © Briggs & Stratton. All Rights reserved

46" & 52" Mower Deck - Height Adjust & Roller Group

REF NO	PART NO	QTY	DESCRIPTION
0010	1736070BMYP	1	SUPPORT, Rear Cross
0020	1736072AYP	1	BRACKET, Rear Mower Pickup
0030	1736073AYP	1	BRACKET, Rear Mower Pickup
0040	1960373SM	8	SCREW, Hex Washer Head, Taptite, 5/16-18 x 1
0050	1736071BMYP	1	HITCH, FRONT
0080	1736081YP	2	ROD, Front Bail
0090	1737059AYP	1	HANGER, Front Mower
0100	1731414SM	1	ROD, Latch
0110	2176012SM	1	RETAINER, Pin Spring
0120	1679166SM	2	SPACER, 1/2 x 7/8 x 1 3/16
0130	1960379SM	2	NUT, Hex Lock, 1/2-13
0140	1736074BMYP	2	BRACKET, GAUGE WHEEL
0150	1736075BMYP	2	BRKT, GAUGE WHEEL, LH
0160	1931334SM	11	BOLT, Carriage, 5/16-18 x 7/8 G5
0170	1931277SM	13	NUT, Hex Flange, Whiz Lock, 5/16-18
0180	1736896YP	4	WHEEL, GAUGE
0190	094025MA	4	BOLT, Gauge Wheel
0195	705437	4	NUT, Push, 1/2
0200	1960170SM	6	WASHER, 1/2
0210	1960687SM	4	NUT, Hex Flange, Esna, 3/8-16
0220	1736991AYP	1	UP STOP
0240	1913744SM	2	NUT, Hex Jam, 1/2-13
0250	1960074SM	2	CLIP, HAIR PIN .093DI
0260	703185	2	BOLT, Round Head, Short Square Neck

Not For Reproduction

Copyright © Briggs & Stratton. All Rights reserved

46" & 52" Mower Deck - Housing, Arbors & Blades Group

Note: Unless noted otherwise, use the standard torque specifications

Mfg. No: 2691361-01

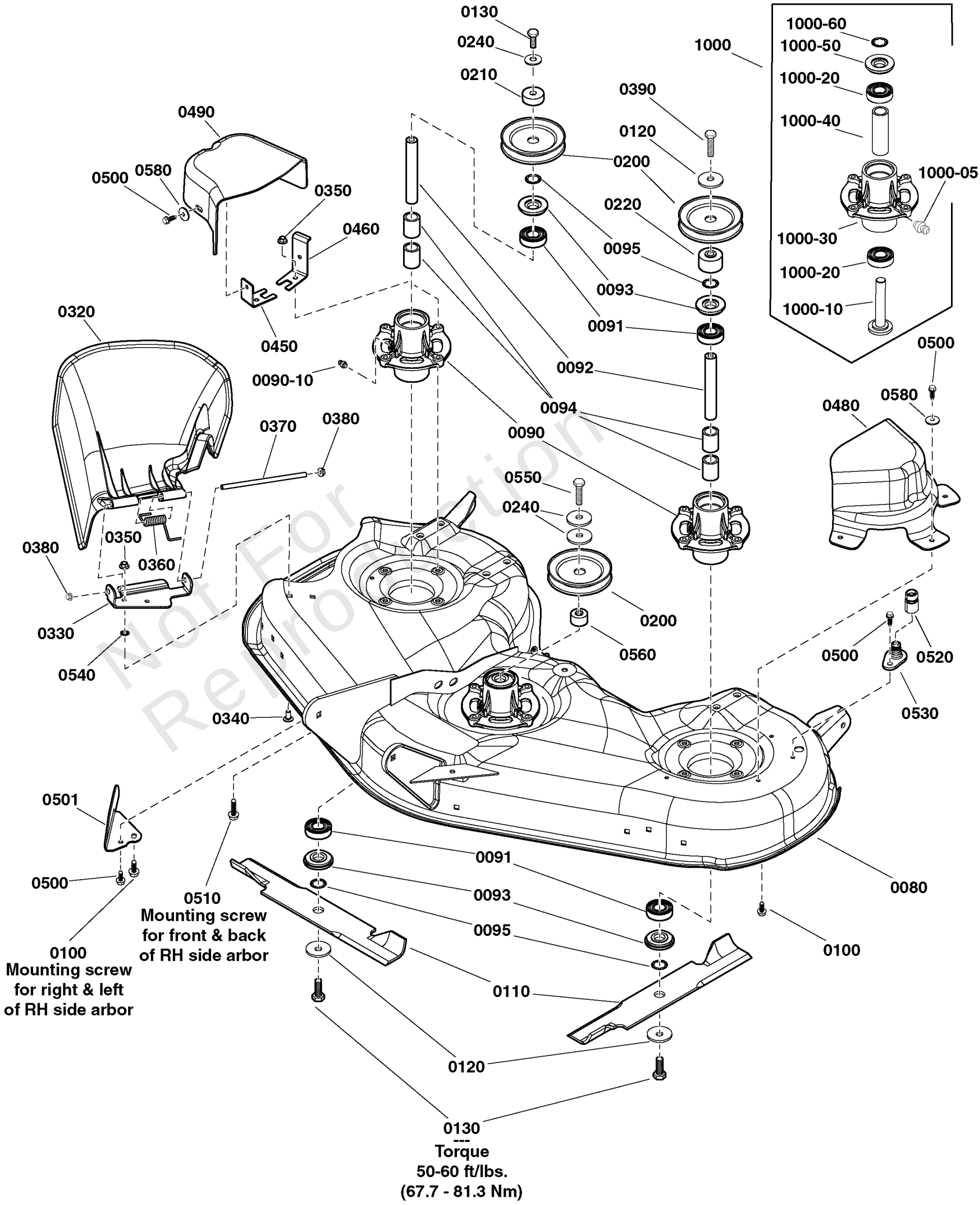

Not For Reproduction

46" & 52" Mower Deck - Housing, Arbors & Blades Group

REF NO	PART NO	QTY	DESCRIPTION
0080	1687457YP	1	MOWER HOUSING KIT, 46
0080	1687461YP	1	HOUSING, Mower Deck, 46" Red
0080	1687787YP	1	HOUSING, Mower Deck, 52" Red
0090	1735573YP	3	HOUSING, w/Lube Fittting
0090-10	1704314SM	3	LUBE FITTING, .250 DR
0091	1735399YP	6	BEARING, Ball, 20mm
0092	1735326YP	3	SHAFT, Spindle -(Replaced by Ref. Nos. 1000-10, this spindle shaft is an exact replacement for the shaft, shield and ring)
0093	1735323YP	6	SHIELD, Arbor
0094	1735328YP	6	SPACER, Bearing -(Replaced by Ref. Nos. 1000-40, this spacer is an exact replacement)
0095	1960766YP	6	RING, SELF LOCKING
0100	1960373SM	10	SCREW, Hex Washer Head, Taptite, 5/16-18 x 1"
0110	1737228AYP	3	BLADE, Mower, 16.125 Long -(Used on 46" mower)
0110	1737252AYP	3	BLADE, 52" Mower -(Used on 52" mower)
0120	1656916SM	4	WASHER, SPRING 0.475I
0130	1920676SM	4	CAPSCREW, Hex Head, 7/16-14 X 1
0200	1735686YP	3	PULLEY, 4.6, Split -(Used on 46" mower)
0200	1735733YP	3	PULLEY, 5.5, Split -(Used on 52" mower)
0210	1735579YP	1	SPACER, Lower Drive
0220	1757967YP	1	SPACER, Pulley" -(Used on 46" mower)
0240	1960769YP	4	WASHER, Belleville" -(Quantity of 3 used on 46" mower, 2 on center spindle 1 on right)
0320	1754745YP	1	DEFLECTOR, Discharge
0330	1754868BMYP	1	BRACKET, Hinge
0340	703125	2	BOLT, Carriage, 5/16-18 x 5/8, GR5
0350	703409	4	NUT, 5/16-18, GR5
0360	1755412YP	1	SPRING, Torsion
0370	1755175YP	1	ROD, Deflector
0380	7012542YP	2	NUT, Push, 5/16"
0390	703171	1	HHCS
0450	1736518BMYP	1	BRACKET, Belt Cover, Front
0460	1736519BMYP	1	BRACKET, Belt Cover, Rear
0480	1735750YP	1	COVER, Belt, LH -(Used on 46" mower)
0480	1736505YP	1	COVER, Belt, LH -(Used on 52" mower)
0490	1735752YP	1	COVER, Belt, RH
0500	703228	7	SCREW, 5/16-18 X .75
0501	1737279BMYP	1	BAFFLE, Pinchoff
0510	1930600SM	2	SCREW, Hex Washer Head, Taptite, 5/16-18 x 1-1/2"
0520	1736898YP	1	CONNECTOR, Washout Port
0530	1735716YP	1	ADAPTER, Washout Port"
0540	703297	2	RETAINER, GR5, 5/16
0550	705424	1	CAPSCREW, Hex Head, 7/16-14 X 1 3/4
0560	1736445YP	1	SPACER, Pulley
0580	703302	5	WASHER, 5/16
1000	84003175	2	ARBOR ASSEMBLY

Not For Reproduction

Copyright © Briggs & Stratton. All Rights reserved

46" & 52" Mower Deck - Housing, Arbors & Blades Group

Note: Unless noted otherwise, use the standard torque specifications

Mfg. No: 2691361-01

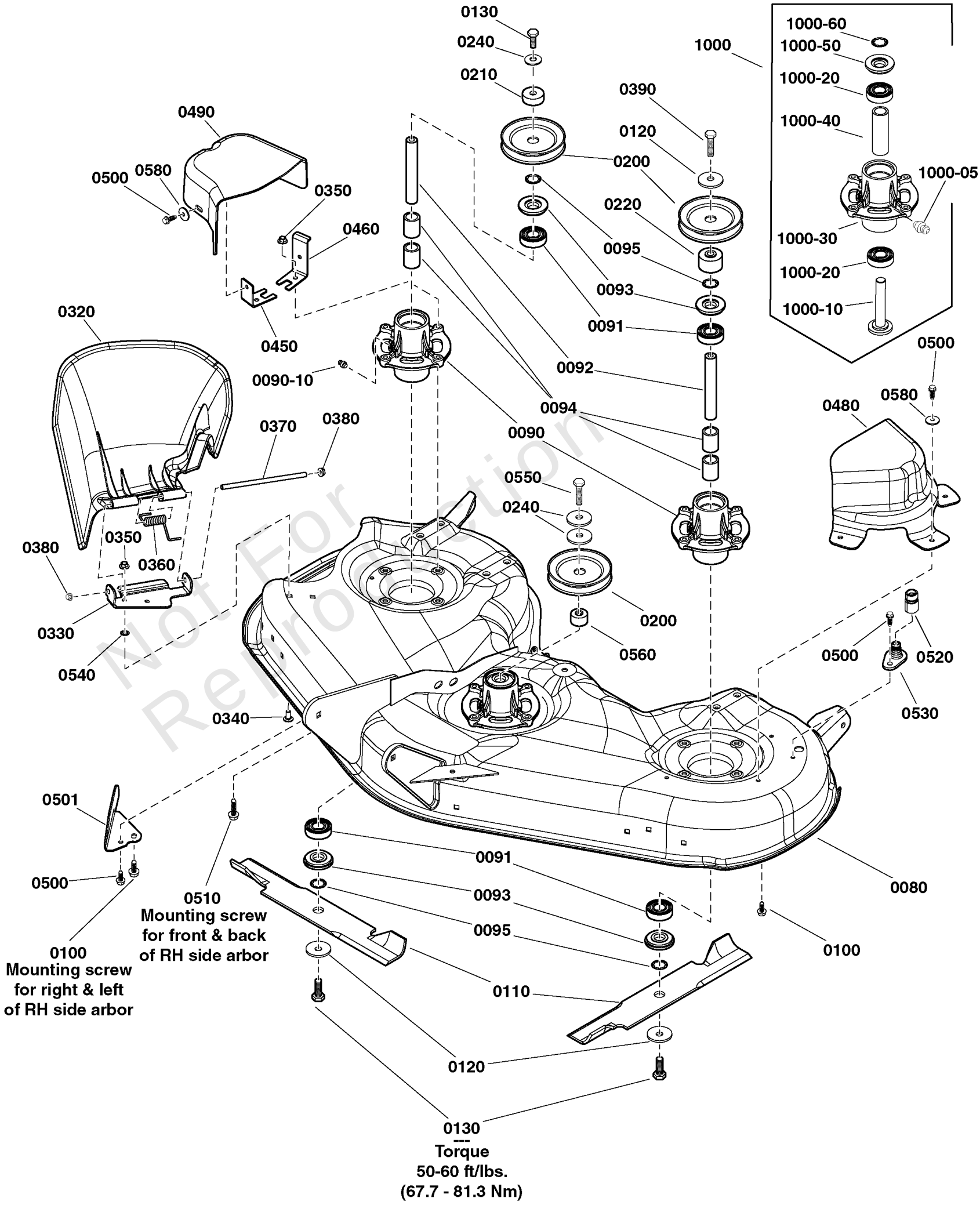

Not For Reproduction

Copyright © Briggs & Stratton. All Rights reserved

46" & 52" Mower Deck - Housing, Arbors & Blades Group

REF NO	PART NO	QTY	DESCRIPTION
1000-05	1704314SM	1	LUBE FITTING, .250 DR
1000-10	84003170	1	SHAFT, SPINDLE
1000-20	1735399YP	2	BEARING, Ball, 20mm
1000-30	84003654	1	HOUSING ASSEMBLY
1000-40	84003167	1	SPACER, BEARING
1000-50	84003166	1	COVER, ARBOR
1000-60	1960766YP	1	RING, SELF LOCKING

Not For Reproduction

Copyright © Briggs & Stratton. All Rights reserved

Controls Group

Note: Unless noted otherwise, use the standard torque specifications

Mfg. No: 2691361-01

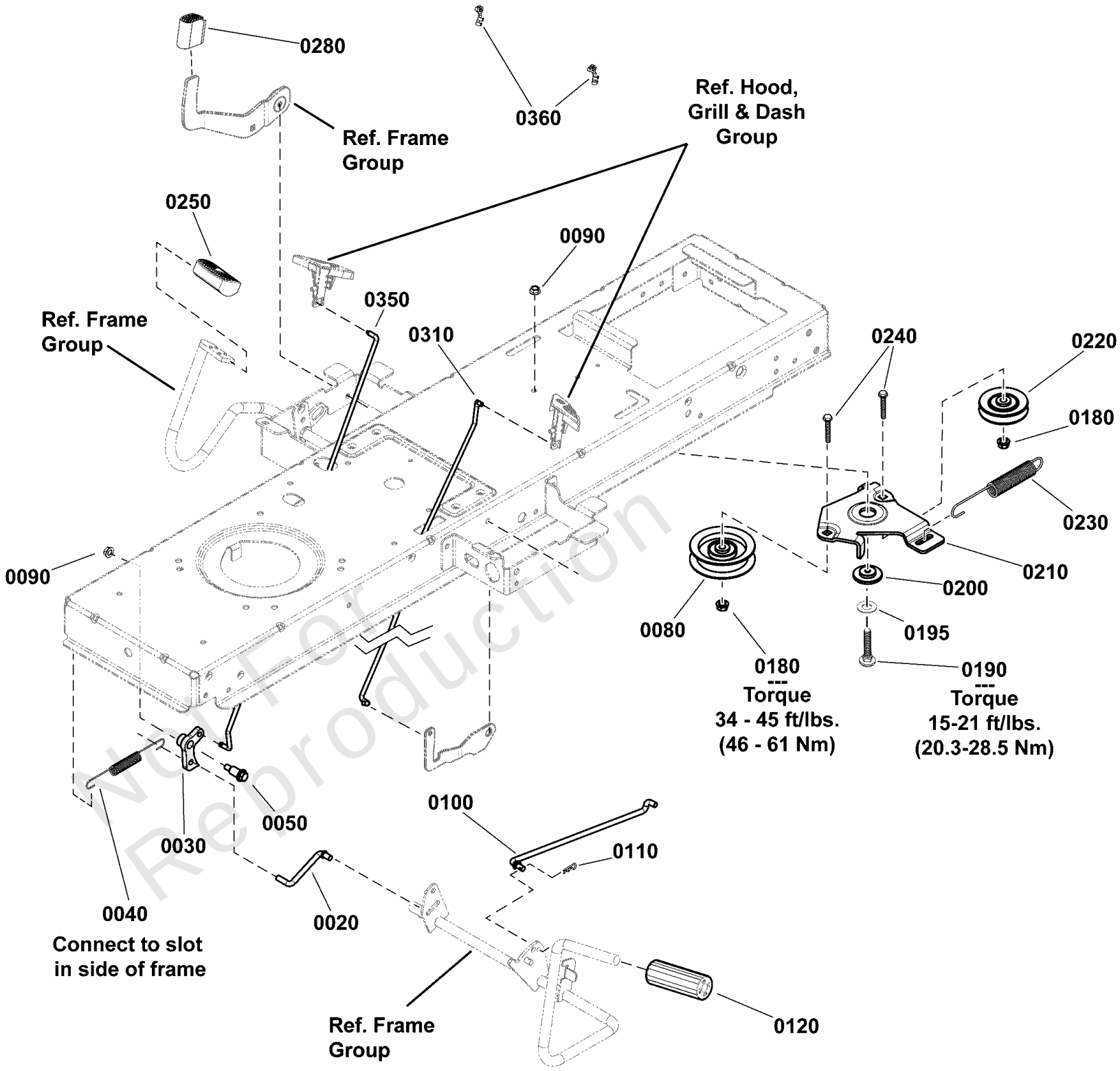

Not For Reproduction

Copyright © Briggs & Stratton. All Rights reserved

Controls Group

REF NO	PART NO	QTY	DESCRIPTION
0020	1727899SM	1	ROD, Cruise Latch, 2.83 LG
0030	1727897SM	1	LATCH, Cruise
0040	2159181SM	1	SPRING, Tension, Clutch
0050	1728976SM	1	BOLT, Shoulder, 5/16-18 x 1-5/8
0080	1728000SM	1	PULLEY, Idler
0090	703115	2	NUT
0100	1727254SM	1	ROD, Brake Return, 12.60 LG
0110	1722460SM	1	PIN, Quick
0120	1727261SM	1	PEDAL-BRAKE BLACK RUB
0180	1960687SM	2	NUT, Hex Flange, ESNA, 3/8-16
0190	703570	1	CAPSCREW, Hex Head, 5/16-18 x 1 1/4
0195	1919326SM	1	WASHER, 5/16
0200	1727935SM	1	SPACER-PIVOT 0.330ID
0210	1727894SM	1	BRACKET, Idler
0220	1728001SM	1	PULLEY, 3 OD
0230	1729620SM	1	SPRING, Extension, 7.52
0240	1931352SM	2	BOLT, Carriage, Short Neck, 3/8-16 x 1-1/2
0250	1721675SM	1	PAD, Foot Pedal Forward
0280	1727259SM	1	PAD, Foot Pedal Reverse
0310	1727267SM	1	ROD, Parking Brake, 16.38 LG
0350	1727898SM	1	ROD, Cruise Latch, 16.97LG
0360	1728111SM	2	CLIP, Linkage

Not For Reproduction

Copyright © Briggs & Stratton. All Rights reserved

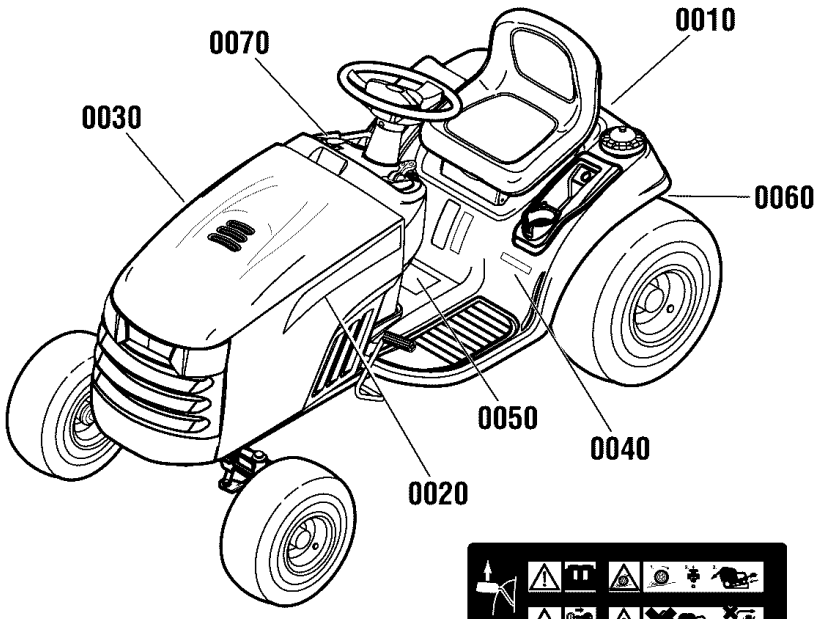

0010

0020

0030

0040

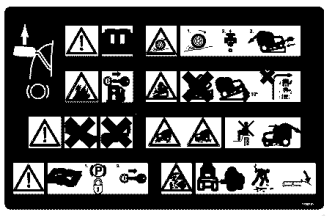

0050

0040

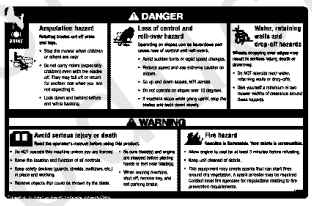

0050

0060

0070

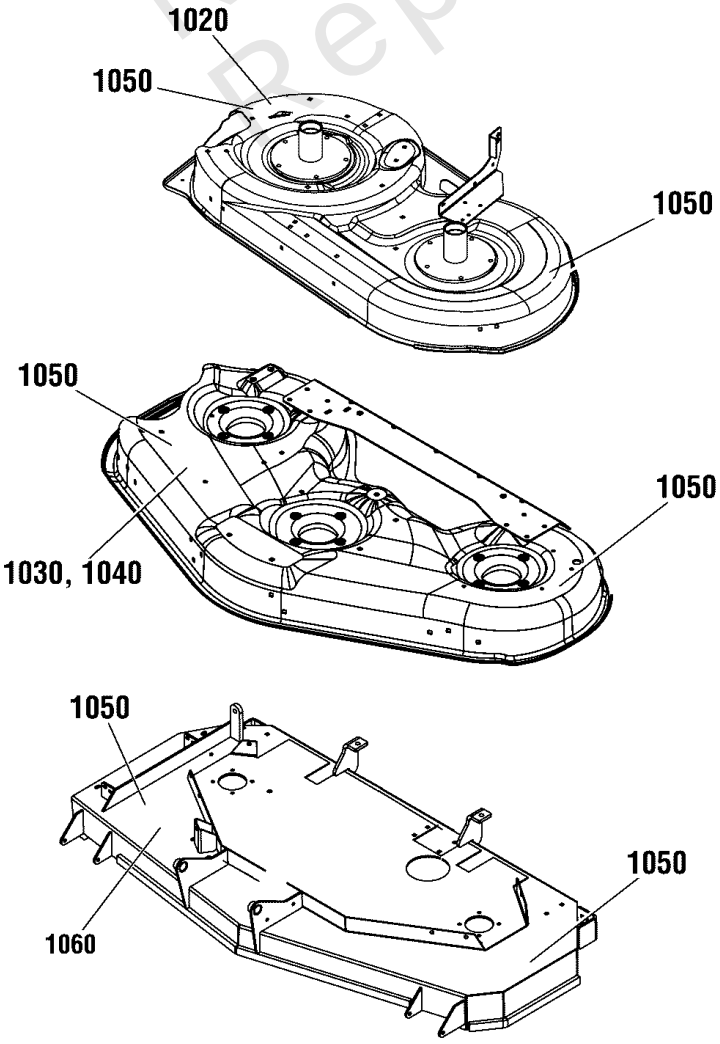

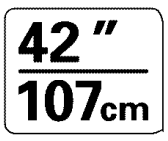

1020

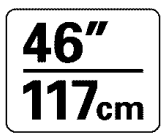

1030

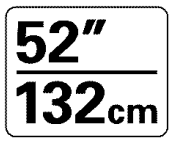

1040

1060

1050

1050

Not For Reproduction

Decals Group

REF NO	PART NO	QTY	DESCRIPTION
0010	1714363SM	1	DECAL, Logo
0020	1731394SM	1	DECAL, Hood, LH
0030	1731395SM	1	DECAL, Hood, RH
0040	1756863YP	1	DECAL, 2000
0040	1756862YP	1	DECAL, 2500
0050	1755395YP	1	DECAL, Tunnel
0050	1750191YP	1	DECAL, Tunnel -(Export)
0060	1730202SM	1	DECAL, Transmission Tow / Release Lever
0070	1722806SM	1	DECAL, Ignition Switch
1020	7104808YP	1	DECAL, Deck, 42"
1030	1755718YP	1	DECAL, 46"/117cm
1040	1755721YP	1	DECAL, Width, 52"
1050	7101665YP	2	DECAL, DANGER
1050	706111	1	DECAL, DISCHARGE -(Export)
1060	1755719YP	1	DECAL, Width, 48"

Not For Reproduction

Copyright © Briggs & Stratton. All Rights reserved

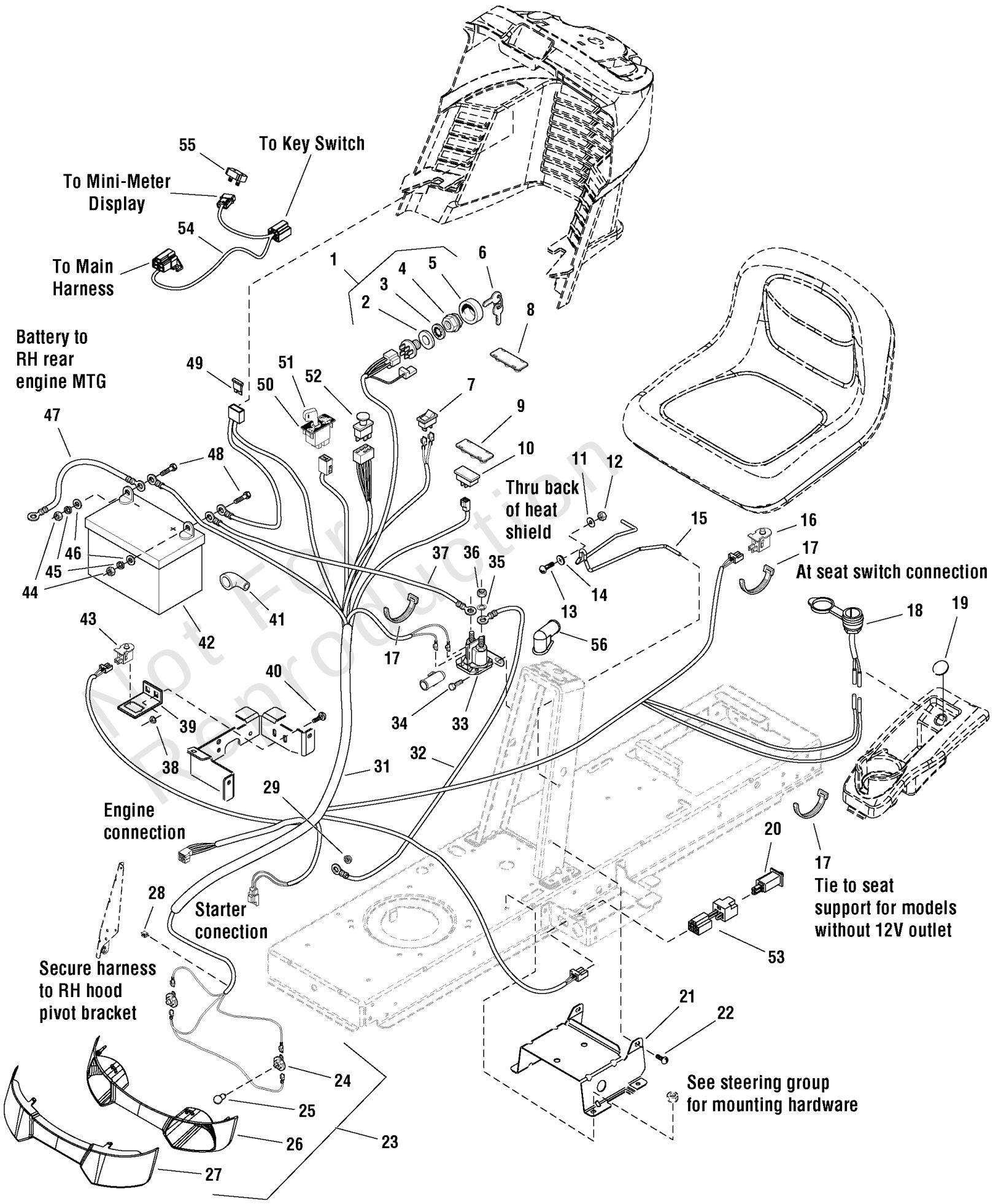

Not For Reproduction

Electrical Group

REF NO	PART NO	QTY	DESCRIPTION
1	1686734	1	SWITCH ASSEMBLY, Ignition, 6-Pole -(Includes Ref. Nos. 2, 3, 4 & 5)
2	2101025	1	WASHER, 5/8
3	1960547	1	LOCKWASHER, Internal Tooth, 5/8 -(Not used on 2014 & newer models)
4	1717549	1	NUT, Hex, Flange, 5/8-32
5	1717550	1	COVER, Ignition
6	1717163	1	IGNITION KEY (Set of 2)
7	1716951	1	SWITCH, Headlights, 2 Terminal
8	1722611	1	PLUG, Hole, Square
9	1729993	1	PLUG, Hour Meter -(Kohler and B&S Single)
10	1728068	1	METER, Hour, LCD -(B&S V-Twin Only)
11	1960353	1	WASHER, Plain, 1/4 -(6 Total for Export)
12	1920397	1	NUT, Hex, ESNA, 1/4-20
13	1931318	1	BOLT, Carriage, 1/4-20 x 7/8
14	1960518	1	NUT, Push On
15	1730007	1	HOLD DOWN, Battery
16	1732005	1	SWITCH, Push Button (NC)
17	1701011	3	TIE, Self Locking 7-5/16
18	7073090	1	OUTLET, 12 Volt DC Power
19	1732007	1	PLUG, Hole Models W/O 12V Adapter
20	7022886	1	SWITCH, DP NO/NC SNAP-IN -(18.5 Gross HP & 20 Gross HP Models)
20	1732006	1	SWITCH, Push Button (NO/NC) -(22 Gross HP Models)
22	1930601	4	CAPSCREW, Hex Washer Head, Taptite, 5/16-18 x 5/8
23	1727296	1	HEADLIGHT ASSEMBLY -(Includes Ref. Nos. 24, 25, 26 & 27)
24	1723451	2	SOCKET ASSEMBLY
25	1677371	2	BULB, 1141-12V 21CP
26	1728973	1	REFLECTOR, Headlight
27	1728974	1	LENS, Headlight
28	2834683	1	CLIP, Speed Wire -(18.5 Gross HP & 20 Gross HP Models)
28	2172434	1	CLIP, Speed Wire -(22 Gross HP Models)
29	1960294	1	NUT, Hex, Flange, 1/4-20
31	1728097	1	HARNESS, Wiring -(Use with Clutch 1731275SM)
31	1737044	1	HARNESS, Wiring -(Use With Clutch 1736105SM) (Used on models with 12 Volt Adapter)
31	1739597	1	HARNESS, Wiring -(Use With Clutch 1736105SM) (Used on models without 12 Volt Adapter)
32	1721830	1	CABLE, Solenoid to Starter
33	1728963	1	SOLENOID
34	1925003	2	SCREW, Taptite, 1/4-20 x 1/2
35	2820426	2	LOCKWASHER, External Tooth, 5/16
36	2820263	2	NUT, Hex, 5/16-24 NF
37	1716549	1	CABLE, #6 x 10 Long, with 2 Ring Terminals, Battery to Solenoid
38	1931277	2	NUT, Hex, Flange Whizlock, 5/16-18
39	1728026	1	SUPPORT, RMO Switch
40	1931333	2	BOLT, Carriage, 5/16-18 x 3/4

Not For Reproduction

Note: Unless noted otherwise, use the standard torque specifications

Mfg. No: 2691361-01

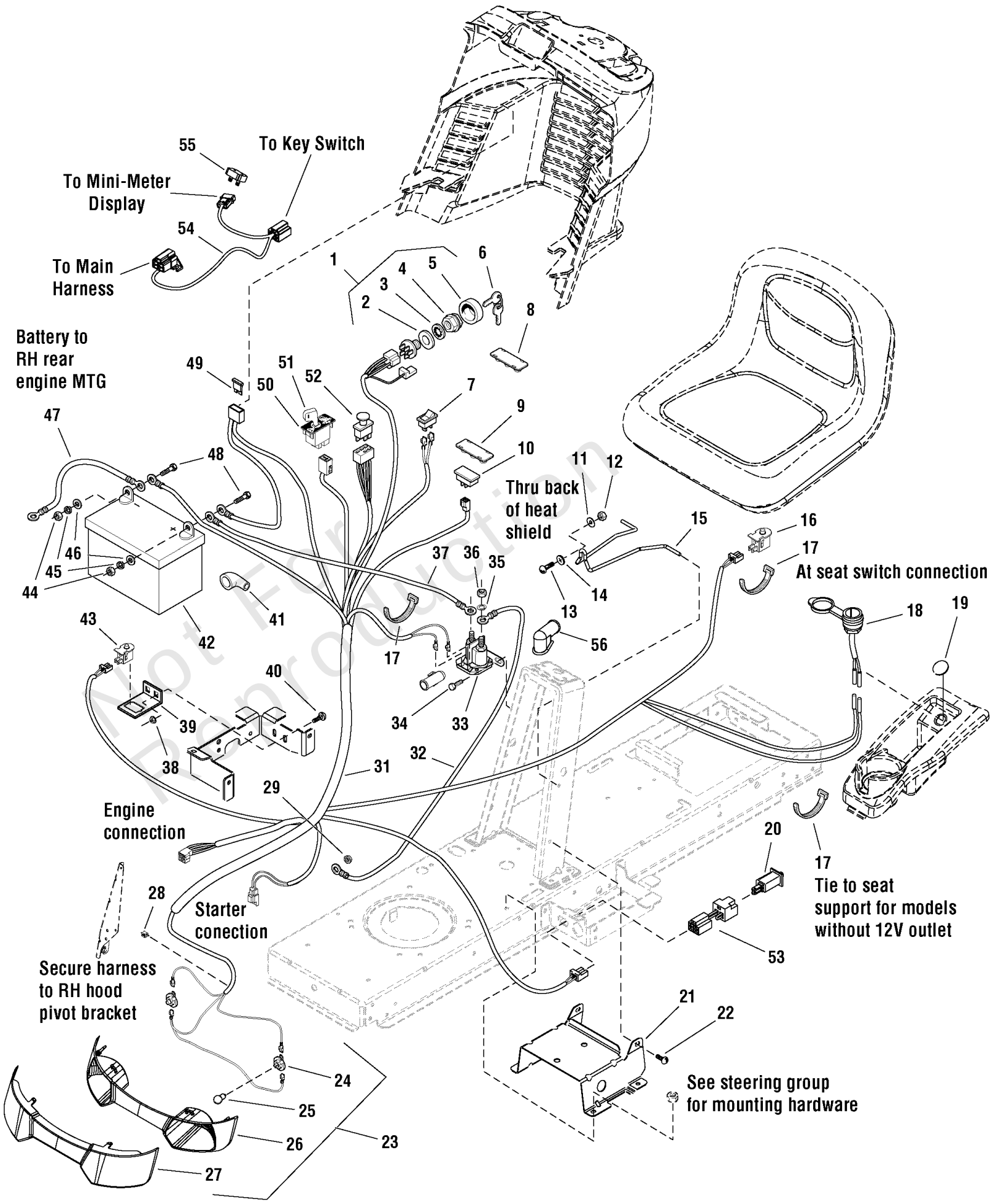

Not For Reproduction

Copyright © Briggs & Stratton. All Rights reserved

Electrical Group

REF NO	PART NO	QTY	DESCRIPTION
41	1677296	1	BOOT, Insulator
42	1685215	1	BATTERY, 12 Volt, 230 CCA
43	1732004	1	SWITCH, Push Button, NO, Black
44	2816622	2	NUT, Hex, Full, 1/4-20
45	2816964	2	LOCKWASHER, 1/4
46	2821319	2	WASHER, 1/4 I.D.
47	1713163	1	CABLE, Battery to Ground
48	2823341	2	CAPSCREW, Hex Head, 1/4-20 x 3/4
49	1731957	1	FUSE, Wiring Harness
50	1726556	1	SWITCH, RMO Module Only
51	1726557	2	KEY, RMO Module, Plastic
52	1722887	1	SWITCH-PTO PUSH
53	1734025	1	WIRING ASSEMBLY, All Conditions Shutdown -(CE/Export)
54	1759898YP	1	HARNESS, Mini Meter Adapter -(SLT250 Models only)
55	1758654YP	1	DISPLAY, Mini Meter -(SLT250 Models only)
56	1713535SM	1	BOOT, Insulator Cable Terminal, 1-15/16 Long, Red

Not For Reproduction

Engine Group - 22, 23 & 25 Gross HP Briggs & Stratton

Note: Unless noted otherwise, use the standard torque specifications

Mfg. No: 2691361-01

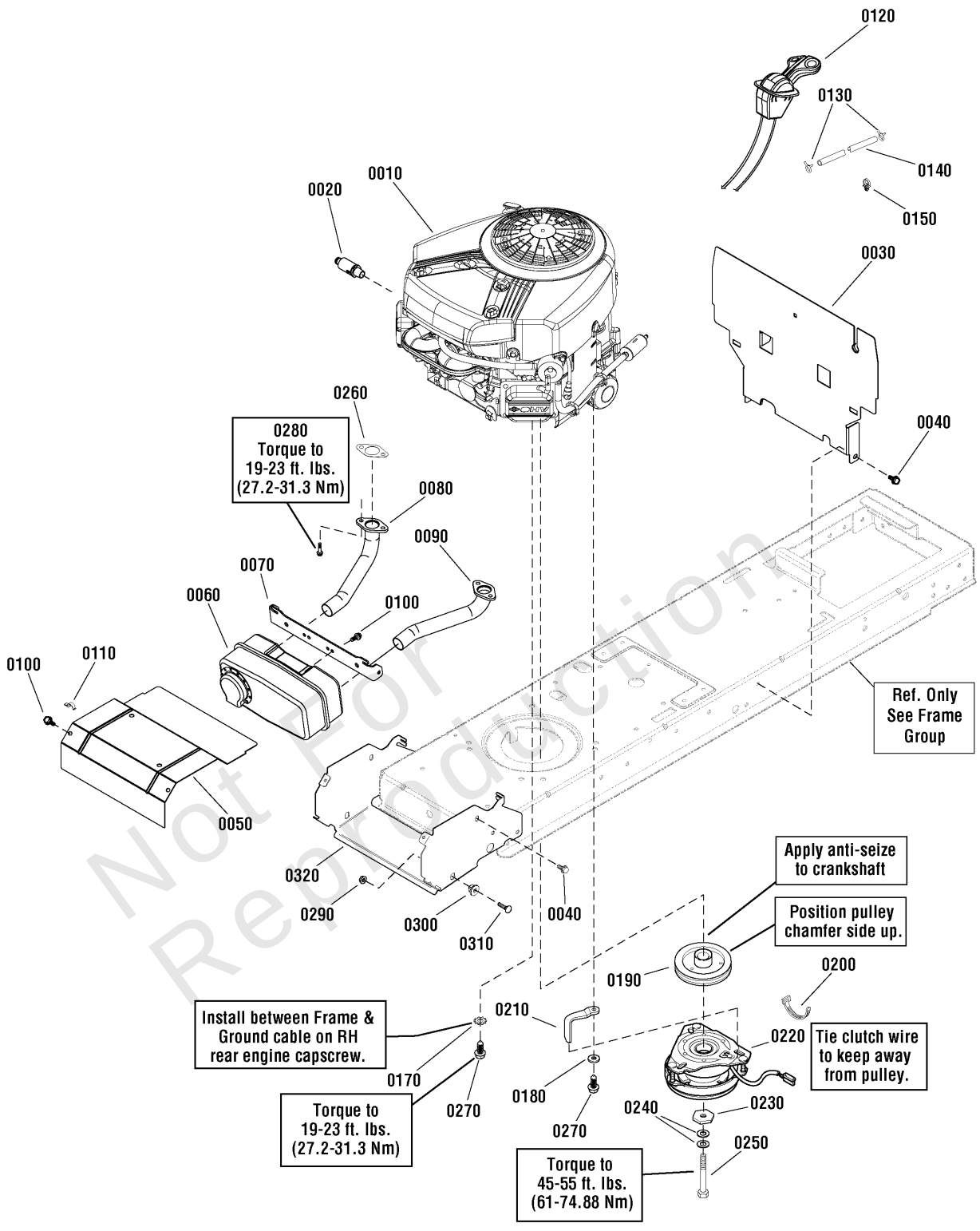

Not For Reproduction

Engine Group - 22, 23 & 25 Gross HP Briggs & Stratton

REF NO	PART NO	QTY	DESCRIPTION
0010	44R677-0005-G1	1	* ENGINE, 22 Gross HP Briggs & Stratton Pro Series, VS Twin -(Engine Model: 44R677-0005-G1)
0010	44S677-0003-G1	1	* ENGINE, 22 Gross HP B&S, Twin Professional Series -(Engine Model: 44S677-0003-G1)
0010	44S777-0005-G1	1	* ENGINE, 23 Gross HP B&S, Twin Professional Series -(Engine Model: 44S777-0005-G1)
0010	44S977-0006-G1	1	* ENGINE, 25 Gross HP Briggs & Stratton Pro Series, VS Twin -(Engine Model: 44S977-0006-G1)
0010	44S977-0002-G1	1	* ENGINE, 25 Gross HP B&S, Twin Professional Series -(Engine Model: 44S977-0002-G1)
0010	44S577-0004-H1	1	* ENGINE, 25 Gross HP B&S, Twin Intek, Choke-A-Matic -(Engine Model: 44S577-0004-H1)
0010	44N677-0028-G1	1	* ENGINE, 22 Gross HP, Briggs & Stratton Twin, Pro Series, Mod. 44N677-0028-G1 -(Engine Model: 44SN77-0028-G1)
0010	40N877-0014-B1	1	* ENGINE, 22 Gross HP B&S, Twin Intek, Choke-A-Matic -(Engine Model: 40N877-0014-B1)
0010	40N877-0031-B1	1	* ENGINE, 22 Gross HP B&S, Twin Intek, Choke-A-Matic -(Engine Model: 40N877-0031-B1)
0010	44U677-0002-G1	1	* ENGINE, 22 Gross HP B&S, Twin Intek, Choke-A-Matic -(Engine Model: 44U677-0002-G1)
0010	44U777-0001-G1	1	* ENGINE, 22 Gross HP B&S, Twin Intek, Choke-A-Matic -(Engine Model: 44U777-0001-G1)
0010	44U577-0002-H1	1	* ENGINE, 23 Gross HP B&S, Twin Intek, Choke-A-Matic -(Engine Model: 44U577-0002-H1)
0020	1750159YP	1	VALVE, Drain -(SLT models)
0030	1728058BMYP	1	HEAT SHIELD, Engine
0040	703949	8	SCREW, 5/16-18.625
0050	1727997ASM	1	HEAT SHIELD, Engine, Twin
0060	1727994SM	1	MUFFLER, Briggs & Stratton Twin
0070	1727976BMYP	1	SUPPORT, Muffler
0080	1727979SM	1	PIPE, Exhaust, Flanged, R.H, 11/8 OD
0090	1727980SM	1	PIPE, Exhaust, Flanged, L.H, 11/8 OD
0100	1925003	4	SCREW-HEX WSHR HD TAPTT 1/4-20X0.500 BLK
0110	703176	1	CLIP, Wire
0120	1736868YP	1	CONTROL, Throttle, Choke-A-Matic
0130	93053B	2	CLAMP, Hose
0140	1734982SM	1	HOSE, Fuel, Low Perm, 1/4ID x 1/2OD x 45.5 Lg
0150	1730268SM	2	CLIP, Hose, 1/2 Dia., Push In
0170	703864	1	WASHER, EXT, 3/8
0180	703878	1	WASHER, FLAT
0190	1732576SM	1	PULLEY & HUB ASSEMBLY, Engine
0200	703586	1	TIE, SELF LOCKING
0210	1737421AYP	1	GUIDE, Belt
0220	1736105SM	1	CLUTCH, ELECTRIC
0230	1708264SM	1	WASHER, HEX, 0.453ID
0240	1960769YP	2	WASHER, Belleville
0250	771023	1	CAPSCREW, Hex Head, Loctite, 7/16-20 x 3 1/2
0260	1731214SM	1	GASKET, Exhaust
0270	2828635SM	2	SCREW-HEX WSHR HD TAP
0280	690341	2	SCREW

Not For Reproduction

Footnotes:

Note:* To verify your specific engine model, please reference the ID Tag located on your engine. See your local Briggs & Stratton distributor for parts and service.

Copyright © Briggs & Stratton. All Rights reserved

Engine Group - 22, 23 & 25 Gross HP Briggs & Stratton

Note: Unless noted otherwise, use the standard torque specifications

Mfg. No: 2691361-01

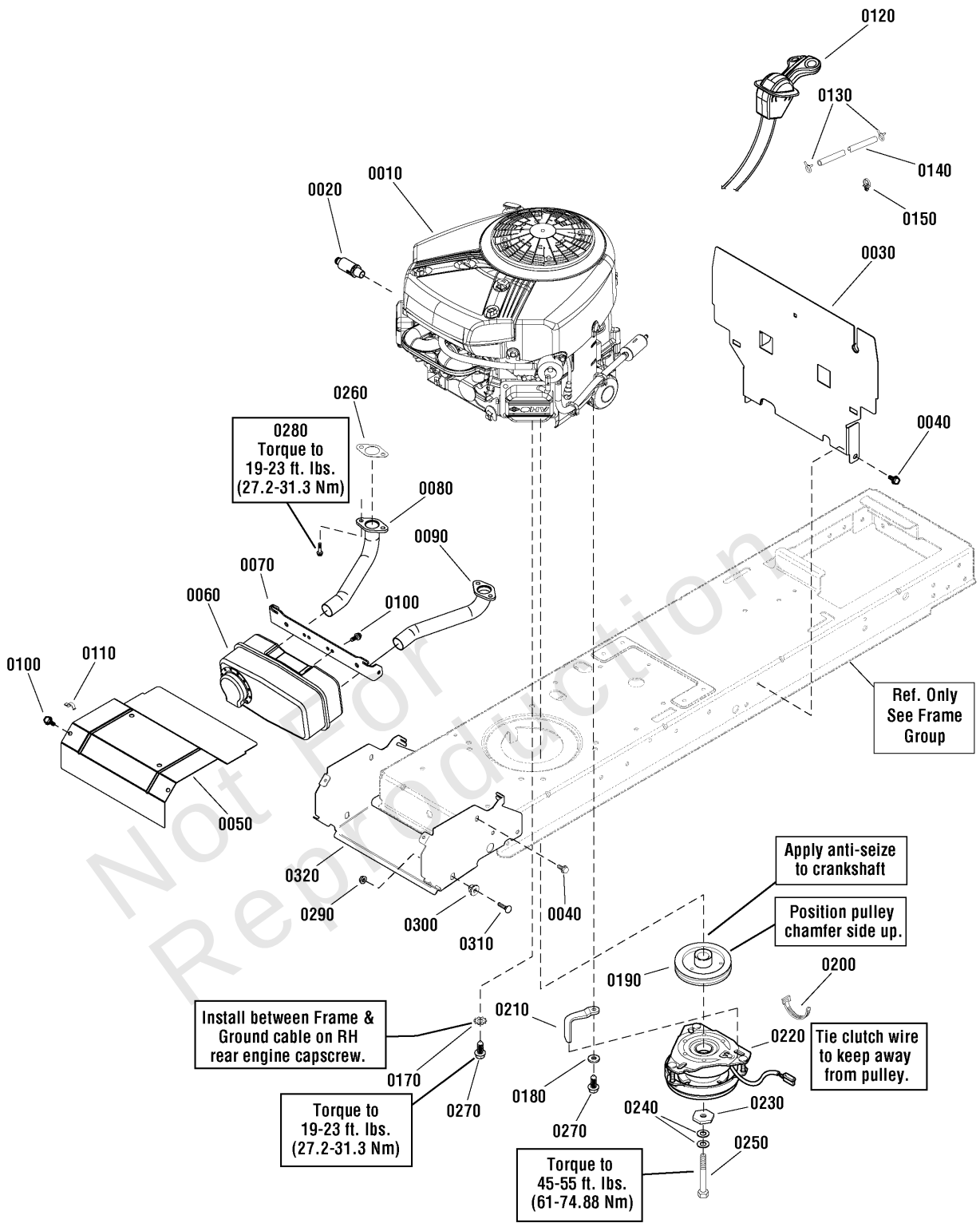

Not For Reproduction

Copyright © Briggs & Stratton. All Rights reserved

REF NO	PART NO	QTY	DESCRIPTION
0290	703409	2	NUT, 5/16-18, GR5
0300	1728086SM	2	PIVOT, Hood, Powdered Metal
0310	703800	2	BOLT, CRRG, 5/16-18X1
0320	1727982ASM	1	SUPPORT, Muffler & Hood Pivot Ecoat

Not For Reproduction

Footnotes:

Note:* To verify your specific engine model, please reference the ID Tag located on your engine. See your local Briggs & Stratton distributor for parts and service.

Copyright © Briggs & Stratton. All Rights reserved

Frame & Front Axle Group

Note: Unless noted otherwise, use the standard torque specifications

Mfg. No: 2691361-01

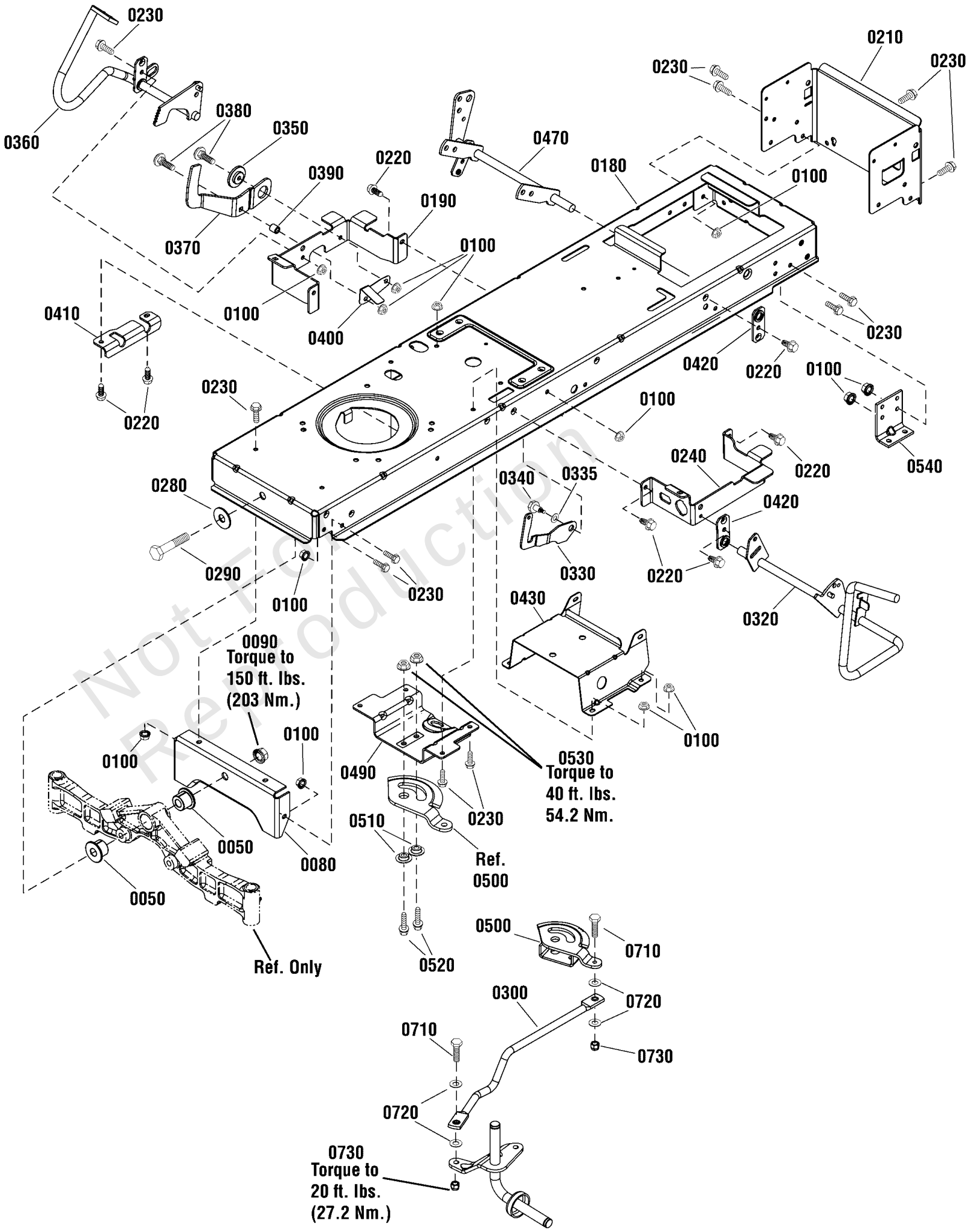

Not For Reproduction

Copyright © Briggs & Stratton. All Rights reserved

Frame & Front Axle Group

REF NO	PART NO	QTY	DESCRIPTION
0050	1730186SM	2	BUSHING, Axle Pivot
0080	1727902SM	1	PLATE, Axle Support
0090	2860646SM	1	NUT, Hex Flange, 5/8-11
0100	703409	26	NUT, 5/16-18, GR5 -(Qty of 21 used on rear suspension units)
0180	-----	1	FRAME -(Not a serviceable part)
0190	1727904SM	1	SUPPORT, Front Footrest, RH
0210	1758690YP	1	SUPPORT, Rear Frame
0220	1930601SM	9	CAPSCREW, Hex Washer Head, Taptite, 5/16-18 x 5/8
0230	703354	23	SCREW, 5/16-18 -(Qty of 18 used on rear suspension units)
0240	1759841BMYP	1	SUPPORT, Front Footrest, LH
0280	1960035SM	1	WASHER-0.625(0.64IDX1
0290	2860744SM	1	CAPSCREW, Hex Head, 5/8-11 x 3 1/4
0300	1738051YP	1	LINK, Drag (with Bearing), 5/16
0320	1736404AYP	1	PEDAL ASSY, BRAKE
0330	1735595ASM	1	LATCH, Brake Lock
0335	7014296YP	1	WASHER, Shim
0340	1729576SM	1	BOLT, Shoulder, 5/16-18 x 15/32
0350	1727935SM	1	SPACER-PIVOT 0.330ID
0360	1736714AYP	1	FORWARD PEDAL ASSEMBLY
0370	1727246SM	1	PEDAL, Reverse
0380	1960223SM	2	BOLT-RD HD SH SQ NK 5
0390	1728024SM	1	SPACER, Foot Pedal
0400	1728025SM	1	ACTUATOR, RMO Switch
0410	1727909SM	1	BRACKET, Pedal Pivot
0420	1727911ASM	2	PLATE, Bearing
0430	1727282SM	1	SUPPORT, Battery
0470	1737957YP	1	LIFT SHAFT ASSEMBLY
0490	1727940SM	1	BRACKET, Sector Support
0500	1751110YP	1	GEAR, Steering
0510	1728122SM	2	SPACER, Sector Gear
0520	1934654SM	2	CAPSCREW, Hex Flange, Whiz Lock, 3/8-16 x 1
0530	1930645SM	2	NUT, Hex Flange, Two Way Lock, 3/8-16
0710	1921977SM	2	CAPSCREW, Hex Head, 5/16-18 x 1 1/4
0540	1727903ASM	2	SUPPORT, Transmission -(Not used on rear suspension units)
0720	1919326SM	4	WASHER, 5/16
0730	1935048SM	2	NUT, Hex Flange, Two Way Lock, 5/16-18

Not For Reproduction

Copyright © Briggs & Stratton. All Rights reserved

Hood, Grille & Dash Group

Note: Unless noted otherwise, use the standard torque specifications

Mfg. No: 2691361-01

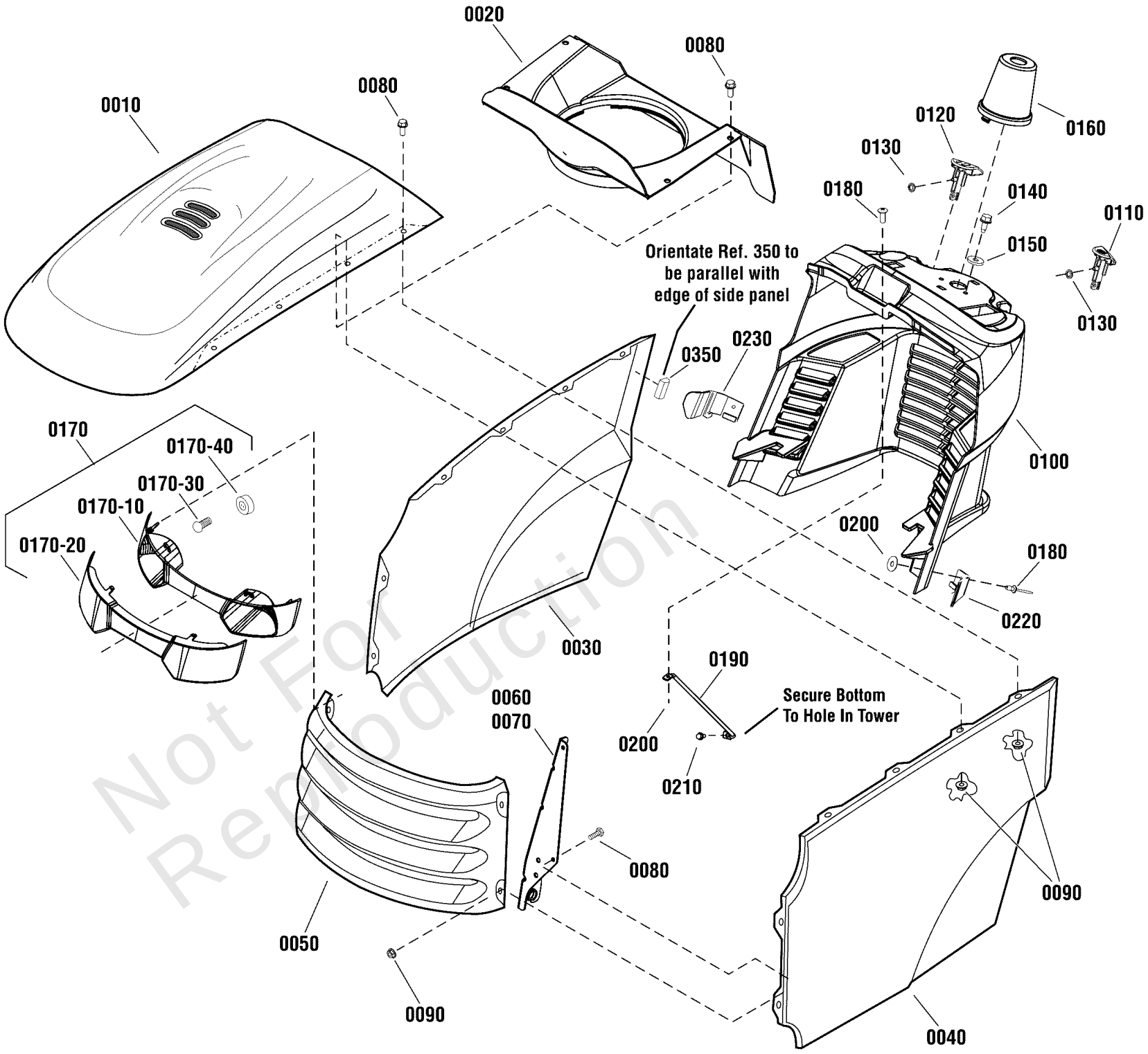

Not For Reproduction

Copyright © Briggs & Stratton. All Rights reserved

Hood, Grille & Dash Group

REF NO	PART NO	QTY	DESCRIPTION
0010	1728031DSM	1	HOOD, with Scoop
0020	7102326YP	1	AIR DUCT, Plenum
0030	1728029DSM	1	PANEL, Hood RH Side
0040	1728030DSM	1	PANEL, Hood LH Side
0050	1727297DSM	1	GRILLE
0060	1727279BMYP	1	HINGE, HOOD, LH ECOAT
0070	1727280BMYP	1	HINGE, Hood RH
0080	1960295SM	12	CAPSCREW, Hex Flange, Whiz Lock, 1/4-20 x 5/8
0090	703161	12	NUT
0100	1727293SM	1	DASHBOARD
0110	1728089SM	1	KNOB, Brake Lock
0120	1728090SM	1	KNOB, Cruise Lock
0130	703826	2	BOLT, PUSHNUT 1/4
0140	703235	2	SCREW, 5/16-18 X 3/4
0150	703298	2	WASHER, 5/16
0160	1727999SM	1	COVER, Steering Shaft
0170	1727296SM	1	HEADLIGHT ASMY-HUNTER
0170-10	1728973SM	1	REFLECTOR
0170-20	1728974SM	1	LENS, HEADLIGHT
0170-30	1677371SM	2	BULB-HEADLIGHT 1
0170-40	1723451SM	2	SOCKET ASSEMBLY
0180	1960392SM	3	SCREW, Pan Head Phillips, #10-24 x 1
0190	1723123SM	1	ROD, Dash Support, 10"
0200	703412	3	NUT, NYLOCK, 10-24
0210	704130	1	SCREW, HEX, 1/4-20X.5
0220	1732030SM	1	GUIDE, Hood, L.H.
0230	1732031SM	1	GUIDE, Hood, R.H.
0350	1754094YP	2	POSITIONER, Hood

Not For Reproduction

Copyright © Briggs & Stratton. All Rights reserved

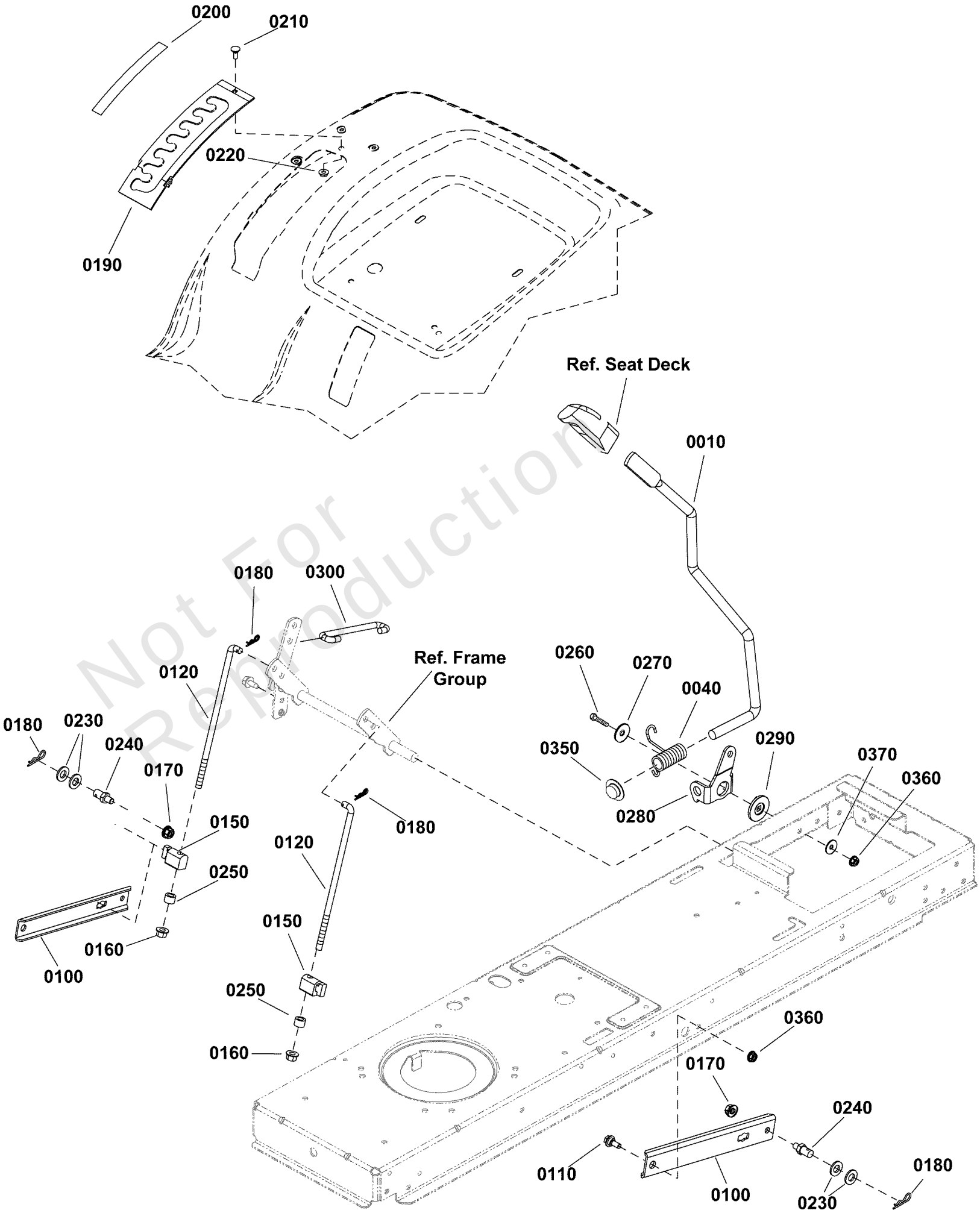

Not For Reproduction

Lift Group - Manual

REF NO	PART NO	QTY	DESCRIPTION
0010	1728070SM	1	ROD, Lift Handle, 17.7
0040	1729652SM	1	SPRING, Torsion
0100	1731417SM	2	ARM, Rear Lift
0110	1732426SM	2	BOLT-SHLDR 5/16-18 0.
0120	1727955SM	2	ROD, Lower Lift, 10.00 LG
0150	1731894SM	2	TRUNNION
0160	1960687SM	2	NUT, Hex Flange, ESNA, 3/8-16
0170	1931211SM	2	NUT, Hex, Flange Lock, 3/8-16
0180	1960074SM	4	CLIP, HAIR PIN .093DI
0190	1727985SM	1	QUADRANT, Lift Height
0200	1730264SM	1	DECAL, Height Of Cut
0210	1960252SM	1	BOLT-RD HD SH SQ NK 1
0220	1930641SM	1	NUT, Hex Flange Whiz, 1/4-20
0230	1960170SM	2	WASHER, 1/2
0240	094067MA	2	PIN, Threaded Shoulder
0250	1666294SM	2	SPACER
0260	84003606	1	SCREW
0270	1933468SM	1	WASHER, 5/16 x 1-1/4 OD
0280	1728990ASM	1	CLEVIS, Lift
0290	1727935SM	1	SPACER-PIVOT 0.330ID
0300	1727954SM	1	ROD, Lift, 5.43 LG
0350	771009	1	PUSHNUT, 5/8
0360	703115	3	NUT
0370	703298	1	WASHER, 5/16

Not For Reproduction

Copyright © Briggs & Stratton. All Rights reserved

Seat Deck & Fuel Tank Group

Note: Unless noted otherwise, use the standard torque specifications

Mfg. No: 2691361-01

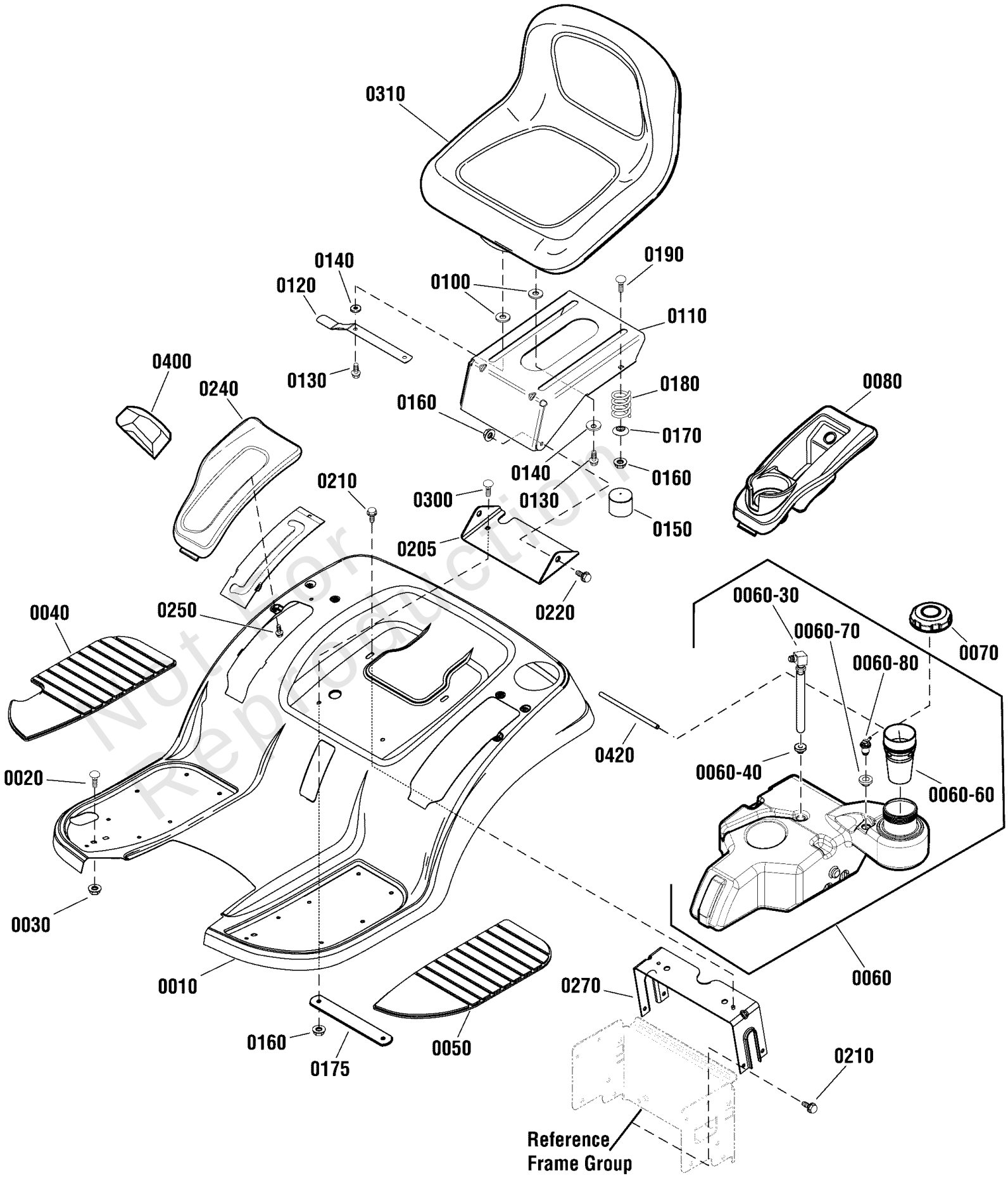

Not for Reproduction

Copyright © Briggs & Stratton. All Rights reserved

Seat Deck & Fuel Tank Group

REF NO	PART NO	QTY	DESCRIPTION
0010	1727264CSM	1	DECK, Seat, Orange
0010	1727264DSM	1	DECK, Seat, Red
0020	703185	2	BOLT, Round Head, Short Square Neck
0030	703409	4	NUT, 5/16-18, GR5
0040	1728007SM	1	PAD, Footrest R.H.
0050	1728006SM	1	PAD, Footrest L.H.
0060	1751226YP	1	TANK, Fuel
0060-30	1736609YP	1	FITTING & HOSE ASSEMBLY, Fuel Tank
0060-40	1654930SM	1	BUSHING, Fuel Tank
0060-60	-----	1	DROP TUBE
0060-70	799624	1	GROMMET
0060-80	7104638YP	1	REMOTE VENT ASSEMBLY
0070	1759036YP	1	CAP, Fuel
0080	1739535YP	1	POD, L.H., Black
0100	1731300SM	4	SPACER, 5/16 ID x 1-1/4 OD
0110	1727265BMYP	1	SUPPORT, Seat
0120	1727268BMYP	1	LATCH, Seat
0130	1930595SM	4	CAPSCREW, Hex, Whiz Lock, 5/16-18 x 1-1/4
0140	703298	4	WASHER, 5/16
0150	1704724SM	2	COVER, Spring, 1-1/2 Long
0160	703115	6	NUT
0170	1709256SM	2	WASHER, Spring, 5/16 x 1 1/4
0175	1759177CJYP	1	PIVOT, Seat
0180	1704728SM	2	SPRING, Compression, 2 Long
0190	703225	2	BOLT
0205	1757755BMYP	1	PIVOT, Seat
0210	703949	6	SCREW, 5/16-18.625
0220	1729576SM	2	BOLT, Shoulder, 5/16-18 x 15/32
0240	1739537YP	1	POD, Electric, HOC, R.H., Black
0250	1960536SM	6	SCREW, HEX WSHR HD PL
0270	1731310SM	1	SUPPORT, Seat Deck
0300	704065	2	BOLT, 5/16-18X.875
0310	1754213YP	1	SEAT, 15" Back
0400	1722302SM	1	GRIP
0420	1751715YP	1	HOSE, Vapor, 5mm
0440	1701011SM	4	TIE, Self Locking -(Not Shown)
0450	1753994YP	1	DECAL, EVAP -(Not Shown)

Not For Reproduction

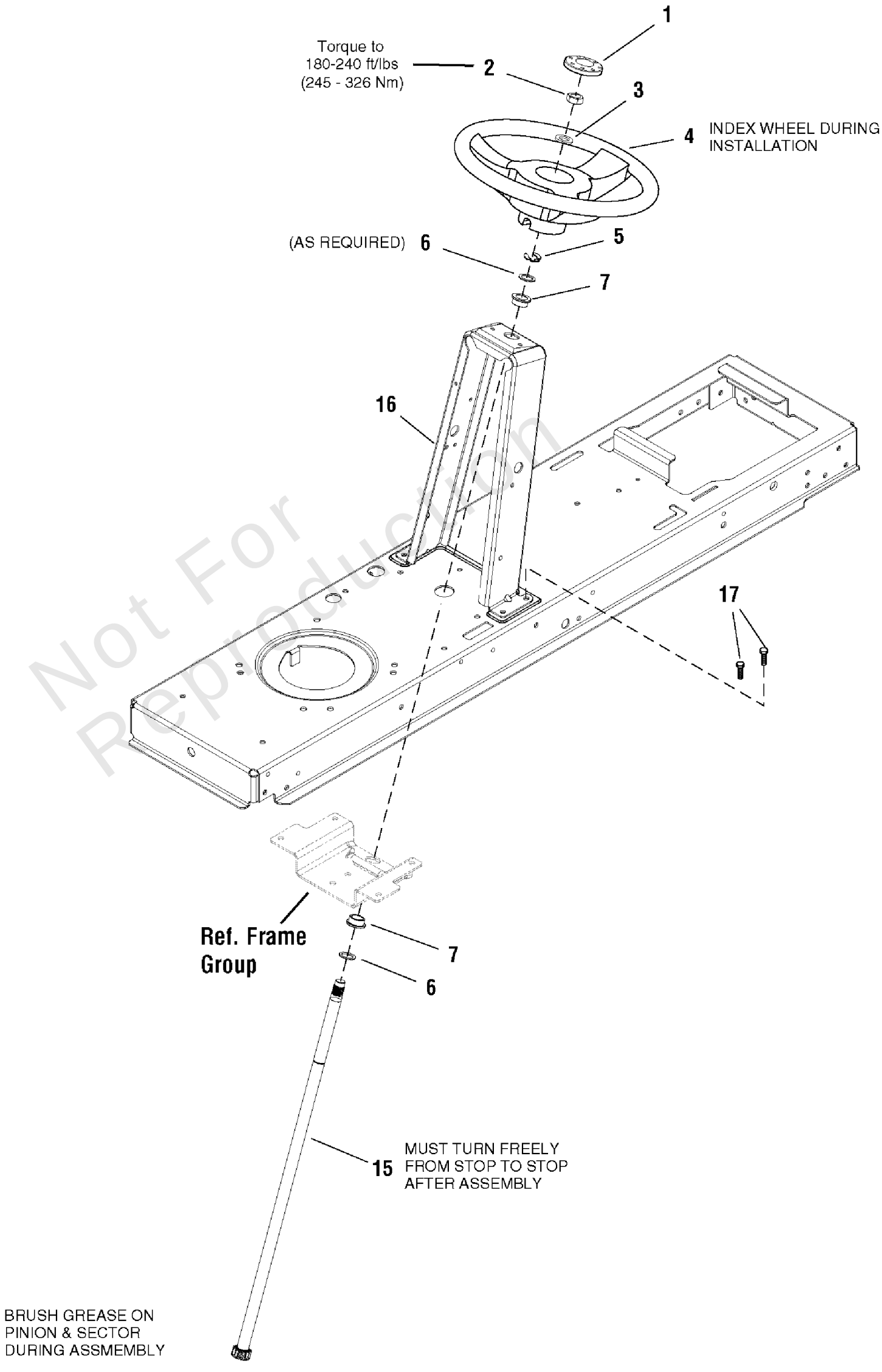

Not For Reproduction

Steering Group

REF NO	PART NO	QTY	DESCRIPTION
1	1725024SM	1	CAP, Steering Wheel
2	1960576SM	1	NUT, Hex Lock, ESNA Light, 5/8-18
3	1924366SM	1	WASHER, 5/8
4	1728069SM	1	STEERING WHEEL, w/Aluminum Insert
5	1611710SM	1	RING, Klipring Extension
6	1960114SM	2	WASHER
7	1729665SM	2	BUSHING, Steering
15	1727813SM	1	SHAFT, Steering Gear & Spline
16	1727260ASM	1	TOWER
17	1930601SM	4	SCREW, Hex Washer Head, Taptite, 5/16-18 x 5/8

Not For Reproduction

Copyright © Briggs & Stratton. All Rights reserved

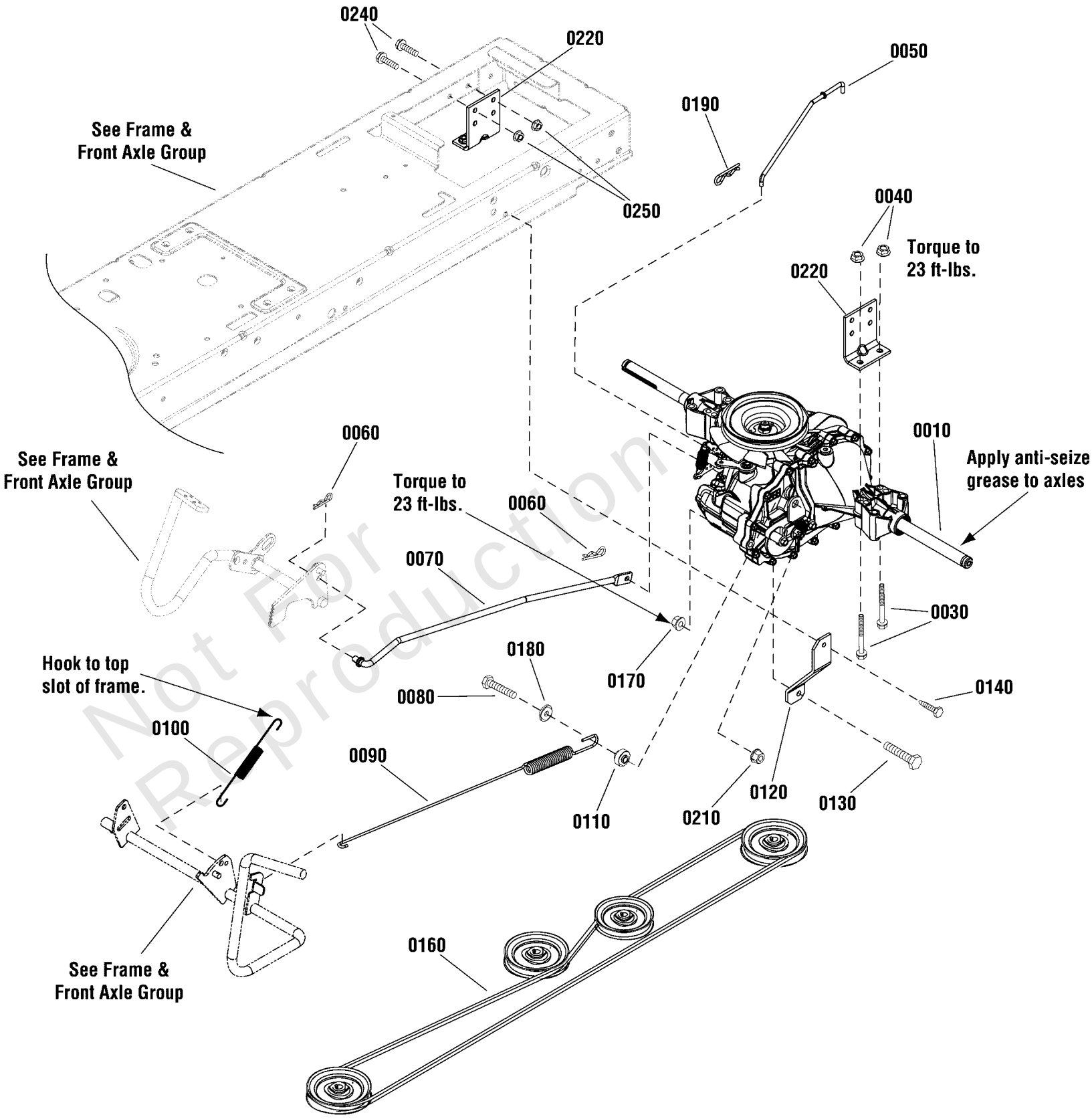

Not For Reproduction

Transmission Group - Hydro Gear

REF NO	PART NO	QTY	DESCRIPTION
0010	1736637	1	* TRANSMISSION, Hydro Gear
0030	1960586	4	CAPSCREW, Hex Head Whiz Lock, 5/16-18 x 2-1/2
0040	1931277	4	NUT, Hex Flange, 5/16-18
0050	1736716	1	ROD, Free Wheel
0060	1722460	2	PIN, Quick
0070	1750545	1	ROD, Speed Control
0080	1921977	1	CAPSCREW, Hex Head, 5/16-18 x 1-1/4
0090	1736409	1	SPRING, Extension
0100	1721995	1	SPRING, Extension, 6-5/8 Lg
0110	1736854	1	SPACER
0120	1736410A	1	STRAP, Torque
0130	1921978	1	CAPSCREW, Hex Head, 5/16-18 x 2
0140	1664847SM	1	CAPSCREW, Hex Head, Taptite, 5/16-18 x 3/4
0160	1737441	1	V-BELT, Drive Belt, HA, 88.46
0170	1960686	2	NUT, Hex Flange, 5/16-18
0180	1919381	1	WASHER, Flat, 5/16 x 1 OD
0190	1960221	1	CLIP, Hair Pin, 5/8 Dia. x 1-5/16 Lg
0210	704067	1	NUT, HEX FLNG,5/16-18
0220	1727903ASM	2	SUPPORT, Transmission
0240	703354	4	SCREW, 5/16-18
0250	703409	4	NUT, 5/16-18, GR5

Not For Reproduction

Footnotes:

Note:* See your local authorized dealership for parts and warranty.

Copyright © Briggs & Stratton. All Rights reserved

Note: Unless noted otherwise, use the standard torque specifications

Mfg. No: 2691361-01

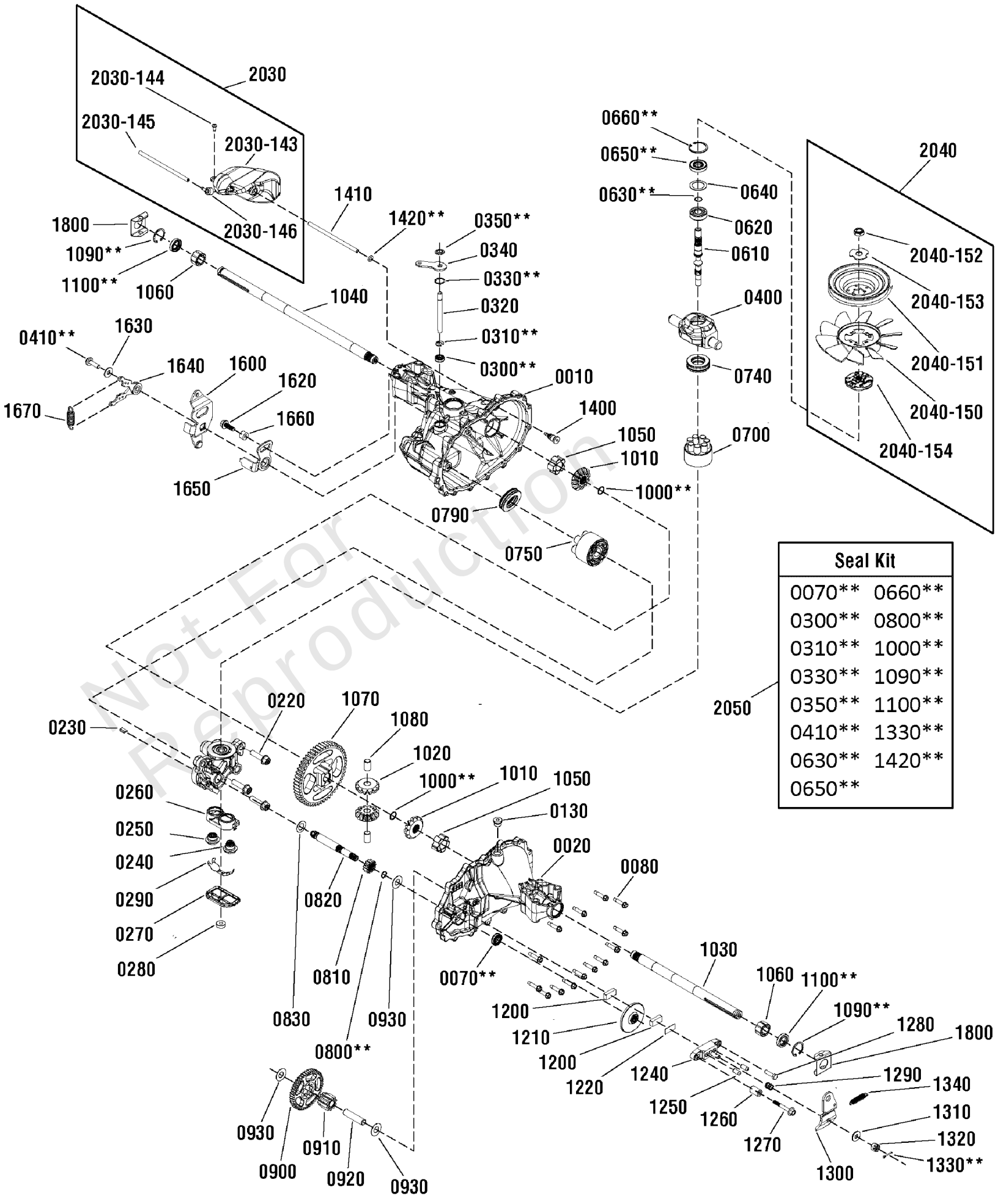

Seal Kit	
0070**	0660**
0300**	0800**
0310**	1000**
0330**	1090**
0350**	1100**
0410**	1330**
0630**	1420**
0650**	

Not For Reproduction

Copyright © Briggs & Stratton. All Rights reserved

Transmission SERVICE PARTS - Hydro-Gear

REF NO	PART NO	QTY	DESCRIPTION
0010	-----	1	* MAIN HOUSING
0020	-----	1	* SIDE HOUSING
0070	-----	1	** SEAL, Lip, 1/2 x 1 x 1/4
0080	-----	14	* SCREW, Hex Washer, 1/4-20 x 1-1/8
0130	-----	1	* PLUG, 9/16-18
0210	-----	1	* BEARING, Journal
0220	-----	3	* BOLT, Hex Flange, 3/8-16
0230	-----	1	* PLATE, Bypass
0240	-----	1	* CHECK PLUG & WASHER ASSEMBLY, .027
0250	-----	1	* CHECK PLUG & WASHER ASSEMBLY
0260	-----	1	* BASE, Filter
0270	-----	1	* COVER, Filter
0280	-----	1	* RING, Magnet
0290	-----	1	* DEFLECTOR
0300	-----	1	** SEAL, Lip, 3/8 x 3/4 x 1/4
0310	-----	1	** RING, Retanier, 3/8
0320	-----	1	* ROD, Actuator Bypass
0330	-----	1	** RING, Retanier, 3/4
0340	-----	1	* ARM, Bypass
0350	-----	1	** RING, Retanier, 3/8
0400	-----	1	* TRUNNION, Swash Plate
0410	-----	1	** SCREW, 5/16-18 x 1
0610	1752308	1	SHAFT, Input
0620	1715142	1	BALL BEARING, 15 x 35 x 11
0630	1715141	1	** RING, Retaining Wire, .512 ID
0640	1706172	1	* WASHER, Spacer, 1-15/64 x 9/16
0650	1706173	1	** SEAL, Lip, 15 x 35 x 7
0660	-----	1	** RING, Retainer, 1-9/16, INT
0700	-----	1	* KIT, Block, 7 Piston, 8cc
0740	-----	1	* BEARING, Thrust Ball, 27 x 47 x 14
0750	-----	1	* PISTON BLOCK ASSEMBLY
0790	1715144	1	BEARING, Thrust Ball, 30 x 52 x 13
0800	-----	1	** RING, Retainer, 1/2, EXT
0810	-----	1	* GEAR, 13T Pinion
0820	-----	1	* SHAFT, Motor
0830	-----	1	* WASHER, .60 x 1
0900	-----	1	* GEAR, 10T / 48T
0910	-----	1	* GEAR, Jackshaft, 10T
0920	-----	1	* JACKSHAFT, Pin
0930	1715169	3	WASHER, 7/16 x 1 x 1/2
1000	-----	2	** RING, Retainer, Spiral, 5/8, EXT
1010	-----	2	* GEAR, Bevel, 12T, Spline OD
1020	-----	2	* GEAR, Bevel, 12T, 1/2 OD
1030	-----	1	* SHAFT, Axle, Keyed, 12-9/64 x 3/4
1040	-----	1	* SHAFT, Axle, Keyed, 17-3/4 x 3/4
1050	-----	2	* BUSHING, Inboard
1060	-----	2	* BUSHING, Outboard
1070	-----	1	* GEAR, 54T, Bull

Not For Reproduction

Footnotes:

Note:** Not a serviceable part, order seal kit, ref # 2050

Note:* See your local authorized dealership for parts and warranty or contact Hydro Gear at www.hydro-gear.com/Support/NorthAmerica.aspx (U.S. 1-877-728-7410 Int'l 32 (0) 12 670 631)

Copyright © Briggs & Stratton. All Rights reserved

Note: Unless noted otherwise, use the standard torque specifications

Mfg. No: 2691361-01

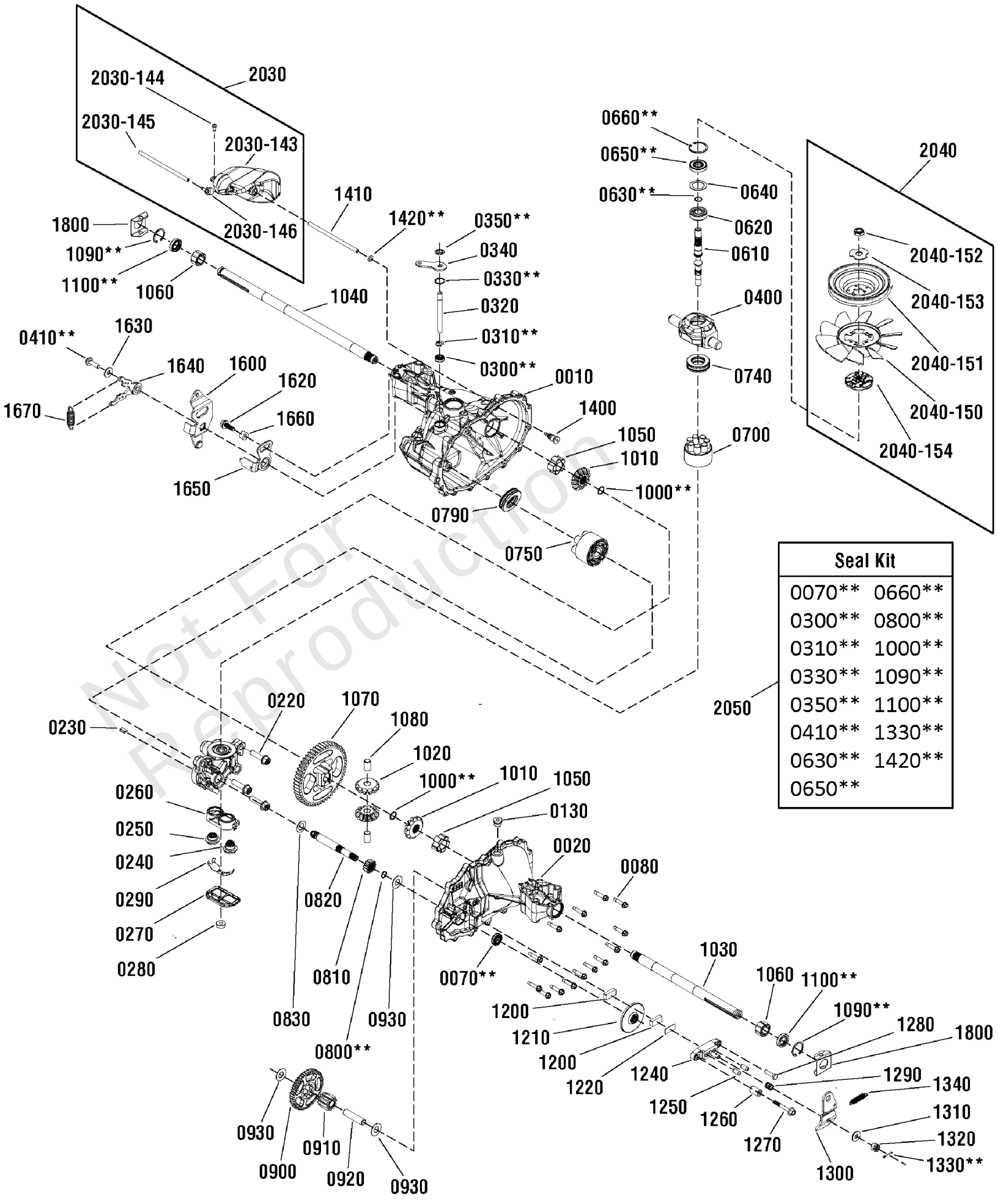

Seal Kit	
0070**	0660**
0300**	0800**
0310**	1000**
0330**	1090**
0350**	1100**
0410**	1330**
0630**	1420**
0650**	

Not For Reproduction

Copyright © Briggs & Stratton. All Rights reserved

REF NO	PART NO	QTY	DESCRIPTION
1080	-----	2	* PIN, Differential
1090	-----	2	** RING, Retainer, INT, Axle
1100	-----	3	** SEAL, Lip, 3/4 x 1-1/8 x 1/4
1200	1706146	2	PUCK, Brake
1210	-----	1	* ROTOR, Brake
1220	1706145	1	PLATE, Brake Puck
1240	-----	1	* YOKE, Brake
1250	1706141	2	PIN, Brake, 5/16 x 3/4
1260	1715199	1	SPACER, Brake Torsion Spring, 1/4 x 9/16
1270	-----	1	* SCREW, Patch, 1/4-20 x 2
1280	1706147	1	SCREW, Patch, 1/4-20 x 1
1290	-----	1	* SPRING, Compression, Brake, Anti-Drag
1300	-----	1	* ARM, Brake
1310	-----	1	* WASHER, 11/32 x 7/8
1320	1714431	1	NUT, Castle, 5/16-24
1330	-----	1	** PIN, Cotter, 3/32 x 3/4
1340	-----	1	* SPRING, Brake Arm
1400	-----	1	* FITTING, Hydraulic, O-Ring Adapter, 5/16
1410	-----	1	* HOSE
1420	-----	1	** O-Ring, .103 x .299 ID
1600	-----	1	* ARM, Control
1620	-----	1	* BOLT, Hex Flange Head
1630	-----	1	* WASHER, 11/32 x 7/8 (Duplicate of #131)
1640	-----	1	* ROTATION ASSEMBLY
1650	-----	1	* NEUTRAL ARM ASSEMBLY
1660	-----	1	* BUSHING
1670	-----	1	* SPRING, Extension
1800	1752309	2	CLIP, Spring, Housing Thrust
2030	1752310	1	E-TANK KIT -(Includes ref # 2030-143, 2030-144, 2030-145 & 2030-146)
2030-143	-----	1	TANK EXPANSION -(Not a serviceable part, order kit #2030)
2030-144	-----	1	BOLT, 10-32 x 1/2 -(Not a serviceable part, order kit #2030)
2030-145	-----	1	TUBE -(Not a serviceable part, order kit #2030)
2030-146	-----	1	CAP, Barbed Vent -(Not a serviceable part, order kit #2030)
2040	1752311	1	FAN & PULLEY KIT -(Includes ref # 2040-150, 2040-151, 2040-152, 2040-153 & 2040-154)
2040-150	-----	1	* FAN, 7", 10 Blade -(Not a serviceable part, order kit #2040)
2040-151	-----	1	* PULLEY, 4.4" -(Not a serviceable part, order kit #2040)
2040-152	-----	1	* NUT, Nylock, 1/2-20 -(Not a serviceable part, order kit #2040)
2040-153	-----	1	* WASHER, OD Slotted -(Not a serviceable part, order kit #2040)
2040-154	-----	1	* HUB, Pulley, 1-9/16 -(Not a serviceable part, order kit #2040)
2050	1752312	1	SEAL KIT -(Includes items marked with **)

Not For Reproduction

Footnotes:

Note:** Not a serviceable part, order seal kit, ref # 2050

Note:* See your local authorized dealership for parts and warranty or contact Hydro Gear at www.hydro-gear.com/Support/NorthAmerica.aspx (U.S. 1-877-728-7410 Int'l 32 (0) 12 670 631)

Copyright © Briggs & Stratton. All Rights reserved

Note: Unless noted otherwise, use the standard torque specifications

Mfg. No: 2691361-01

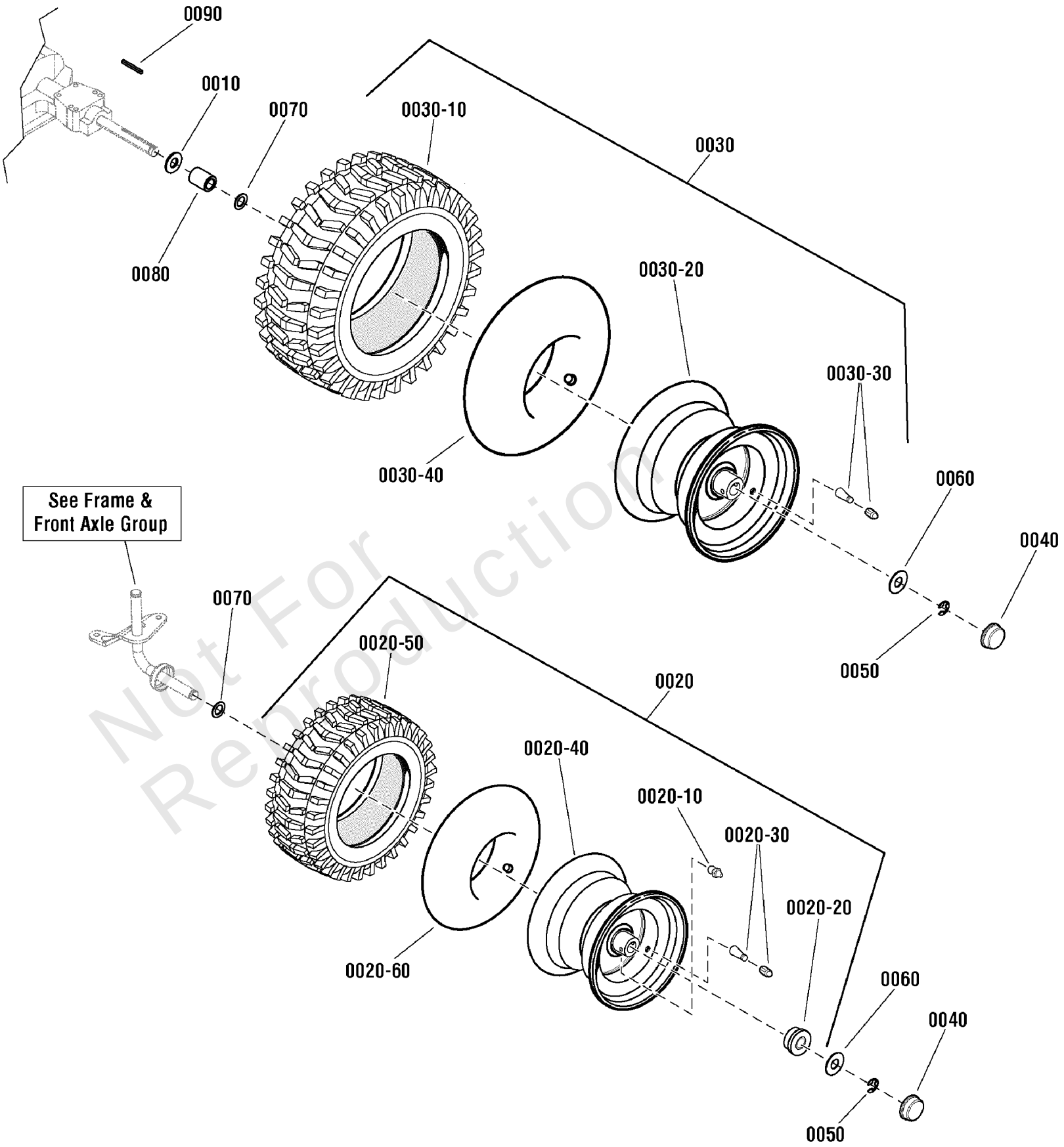

Not For Reproduction

Copyright © Briggs & Stratton. All Rights reserved

Wheels & Tires Group

REF NO	PART NO	QTY	DESCRIPTION
0010	2860202SM	2	WASHER, 3/4 x 1-5/8 OD x 1/8 Thick
0020	1729708SM	2	WHEEL & TIRE ASSEMBLY, Front
0020-10	2812808SM	1	FITTING, Lube, 1/4
0020-20	1742259YP	2	BUSHING, 3/4" ID x 1.38" OD Hardened (2 per wheel)
0020-30	2172353SM	1	VALVE STEM & CAP, Air .453 Dia 0.88 Long
0020-40	-----	1	WHEEL & BUSHINGS ASSEMBLY, Front -(Order wheel & tire complete)
0020-60	1664090SM	2	TUBE
0020-50	1731951SM	1	TIRE, 15 x 6 - 6, Turf Rider
0030	7101560YP	2	ASSY, WHEEL & TIRE -(38" Models Only)
0030	7101563YP	2	ASSY, WHEEL & TIRE -(42" Models Only)
0030	1732324SM	2	WHEEL & TIRE ASSEMBLY, 22 x 10-8 -(44", 46" & 48" Models Only)
0030-10	7101559YP	2	TIRE, 20 x 8-8, K358 -(38" Models Only)
0030-10	7101562YP	2	TIRE, 20 x 10-8, 2 Ply -(42" Models Only)
0030-10	1732394SM	2	TIRE, 22 x 10-8, 2 Ply, K358 -(44", 46" & 48" Models Only)
0030-20	-----	2	WHEEL & BUSHINGS ASSEMBLY -(Order wheel & tire complete)
0030-30	7012234SM	2	VALVE STEM, TR412
0030-40	2164247SM	2	TUBE
0040	094618MA	4	HUB CAP
0050	720010	4	E-RING, 3/4D, 1/2T
0060	722620	4	WASHER, Flat
0070	722598	4	WASHER, Flat, 3/4 x 1-1/4 x 16GA
0080	1730181SM	2	SPACER, 3/4 ID x 1-1/4 OD x 1.65
0090	720258	2	KEY, Square, 3/16

Not For Reproduction

Footnotes:

Note:* Not a serviceable part, service wheel complete

Copyright © Briggs & Stratton. All Rights reserved

Hardware Identification & Torque Specifications

Torque Specification Chart

FOR STANDARD METRIC MACHINE HARDWARE (Tolerance ± 20%)

Property Class	5.6 Class 5.6		8.8 Class 8.8		10.9 Class 10.9		12.9 Class 12.9	
Size Of Hardware	*in/lbs* **ft/lbs**	Nm.	*in/lbs* **ft/lbs**	Nm.	*in/lbs* **ft/lbs**	Nm.	*in/lbs* **ft/lbs**	Nm.
M3	*5.88*	*.56*	*13.44*	*1.28*	*19.2*	*1.80*	*22.92*	2.15
M4	*13.44*	*1.28*	*30.72*	*2.90*	*43.44*	*4.10*	*52.56*	4.95
M5	*26.4*	*2.50*	*60.96*	*5.75*	**5.97**	*8.10*	**7.15**	9.7
M6	*44.64*	*4.3*	**7.3**	*9.9*	**10.3**	*14*	**12.1**	16.5
M7	**5.2**	*7.1*	**12.1**	*16.5*	**16.9**	*23*	**19.9**	27
M8	**7.7**	*10.5*	**17.7**	*24*	**25**	*34*	**29**	40
M10	**15**	*21*	**35**	*48*	**50**	*67*	**59**	81
M12	**26**	*36*	**61**	*83*	**86.2**	*117*	**103**	140
M14	**42**	*58*	**101**	*132*	**136**	*185*	**162**	220
M16	**64**	*88*	**147**	*200*	**210**	*285*	**250**	340
M18	**89**	*121*	**202**	*275*	**287**	*390*	**346**	470
M20	**126**	*171*	**290**	*390*	**405**	*550*	**486**	660
M22	**169**	*230*	**390**	*530*	**559**	*745*	**656**	890
M24	**217**	*295*	**497**	*375*	**708**	*960*	**840**	1140
M27	**320**	*435*	**733**	*995*	**1032**	*1400*	**1239**	1680
M30	**435**	*590*	**995**	*1350*	**1401**	*1900*	**1681**	2280
M33	**590**	*800*	**1349**	*1830*	**1902**	*2580*	**2278**	3090
M36	**759**	*1030*	**1740**	*2360*	**2441**	*3310*	**2935**	3980
M39	**988**	*1340*	**2249**	*3050*	**3163**	*4290*	**3798**	5150

The guides and ruler furnished below are designed to help you select the appropriate hardware.

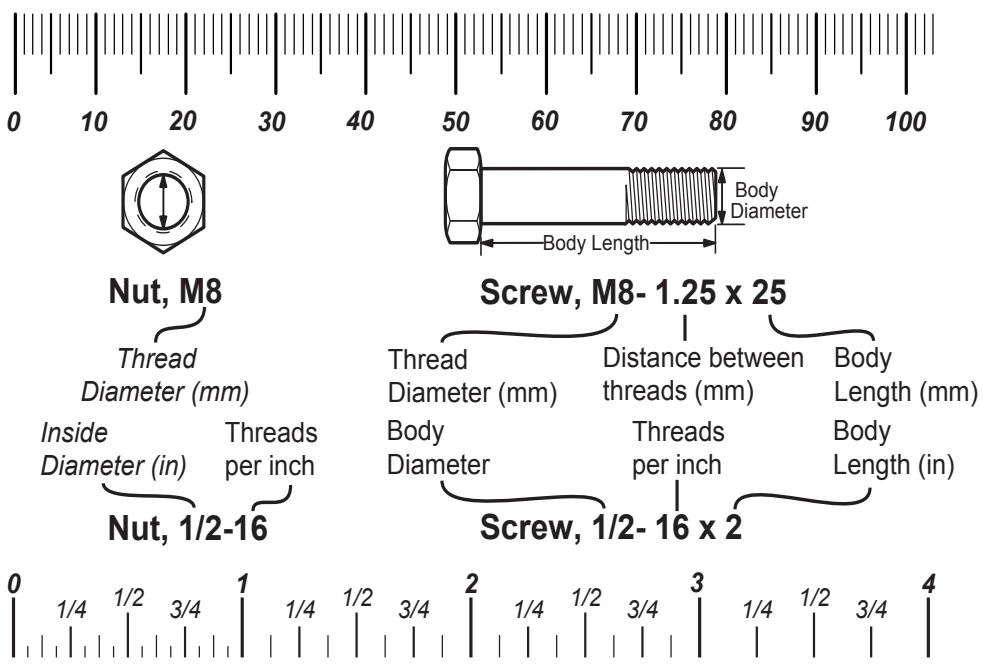

Standard Hardware Sizing

When a washer or nut is identified as **1/2"** (M8), this is the *Nominal size*, meaning the *inside diameter* is 1/2 inch (8mm metric thread diameter); if a second number is present it represents the *threads per inch* (distance between threads).

When bolt or capscrew is identified as **1/2 - 16 x 2"** (M8 - 1.25 x 50), this means the *Nominal size*, or body diameter is 1/2 inch (8mm metric thread diameter), the second number,16, represents the *threads per inch, (distance between threads).* The final number is the body length of the bolt or screw, 2 inches (50mm).

Torque Specification Chart

FOR STANDARD MACHINE HARDWARE (Tolerance ± 20%)

Hardware Grade	No Marks SAE Grade 2		SAE Grade 5		SAE Grade 8	
Size Of Hardware	*in/lbs* **ft/lbs**	Nm.	*in/lbs* **ft/lbs**	Nm.	*in/lbs* **ft/lbs**	Nm.
8-32	*19*	2.1	*30*	3.4	*41*	4.6
8-36	*20*	2.3	*31*	3.5	*43*	4.9
10-24	*27*	3.1	*43*	4.9	*60*	6.8
10-32	*31*	3.5	*49*	5.5	*68*	7.7
1/4-20	*66*	7.6	**8**	10.9	**12**	16.3
1/4-28	*76*	8.6	**10**	13.6	**14**	19.0
5/16-18	**11**	15.0	**17**	23.1	**25**	34.0
5/16-24	**12**	16.3	**19**	25.8	**29**	34.0
3/8-16	**20**	27.2	**30**	40.8	**45**	61.2
3/8-24	**23**	31.3	**35**	47.6	**50**	68.0
7/16-14	**30**	40.8	**50**	68.0	**70**	95.2
7/16-20	**35**	47.6	**55**	74.8	**80**	108.8
1/2-13	**50**	68.0	**75**	102.0	**110**	149.6
1/2-20	**55**	74.8	**90**	122.4	**120**	163.2
9/16-12	**65**	88.4	**110**	149.6	**150**	204.0
9/16-18	**75**	102.0	**120**	163.2	**170**	231.2
5/8-11	**90**	122.4	**150**	204.0	**220**	299.2
5/8-18	**100**	136	**180**	244.8	**240**	326.4
3/4-10	**160**	217.6	**260**	353.6	**386**	525.0
3/4-16	**180**	244.8	**300**	408.0	**420**	571.2
7/8-9	**140**	190.4	**400**	544.0	**600**	816.0
7/8-14	**155**	210.8	**440**	598.4	**660**	897.6
1-8	**220**	299.2	**580**	788.8	**900**	1,244.0
1-12	**240**	326.4	**640**	870.4	**1,000**	1,360.0

NOTES

1. These torque values are to be used for all hardware excluding: locknuts, self-tapping screws, thread forming screws, sheet metal screws and socket head setscrews.
2. Recommended seating torque values for locknuts:
   a. for prevailing torque locknuts - use 65% of grade 5 torques.
   b. for flange whizlock nuts and screws - use 135% of grade 5 torques.
3. Unless otherwise noted on assembly drawings, all torque values must meet this specification.

Common Hardware Types

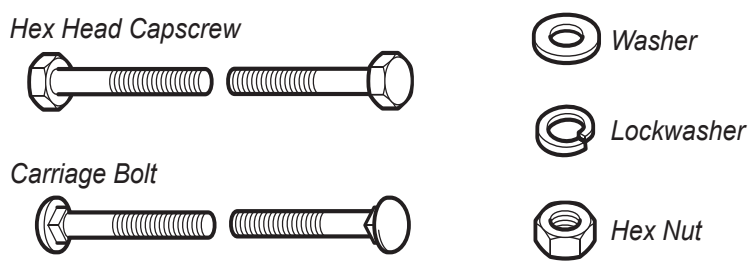

Wrench & Fastener Size Guide

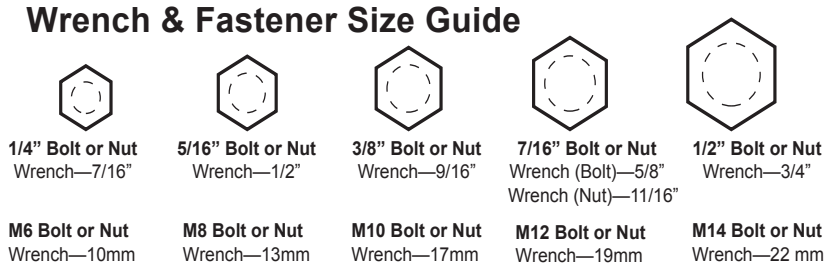

MASSEY FERGUSON

Copyright © Briggs & Stratton. All Rights reserved