Parts Manual

Mfg. No: 252707-0181-99

Copyright © Briggs & Stratton. All Rights reserved

22-Jun-2026

Model Components

Page

Air Cleaner Grps. 4
Alternator Chart, Elect. 6
Blower Hsg, Flywheel, Screen. 8
Carburetor Assy. 10
Controls. 12
Cylinder, Head. 14
Electric Starter. 16
Electric Starter. 18
Fuel Grp. 20
Fuel Tank Grp. 22
Gasket Sets. 24
Governor Spring. 26
Muffler Grp. 28
Oil Fill, Sump. 30
Piston Grp, Crankshaft, Cam. 32
Replacement Engine - Europe, Middle East & Africa. 36
Replacement Engine - US & Canada. 37
Rewind Starter. 38

Not For Reproduction

Copyright © Briggs & Stratton. All Rights reserved

Mfg. No: 252707-0181-99

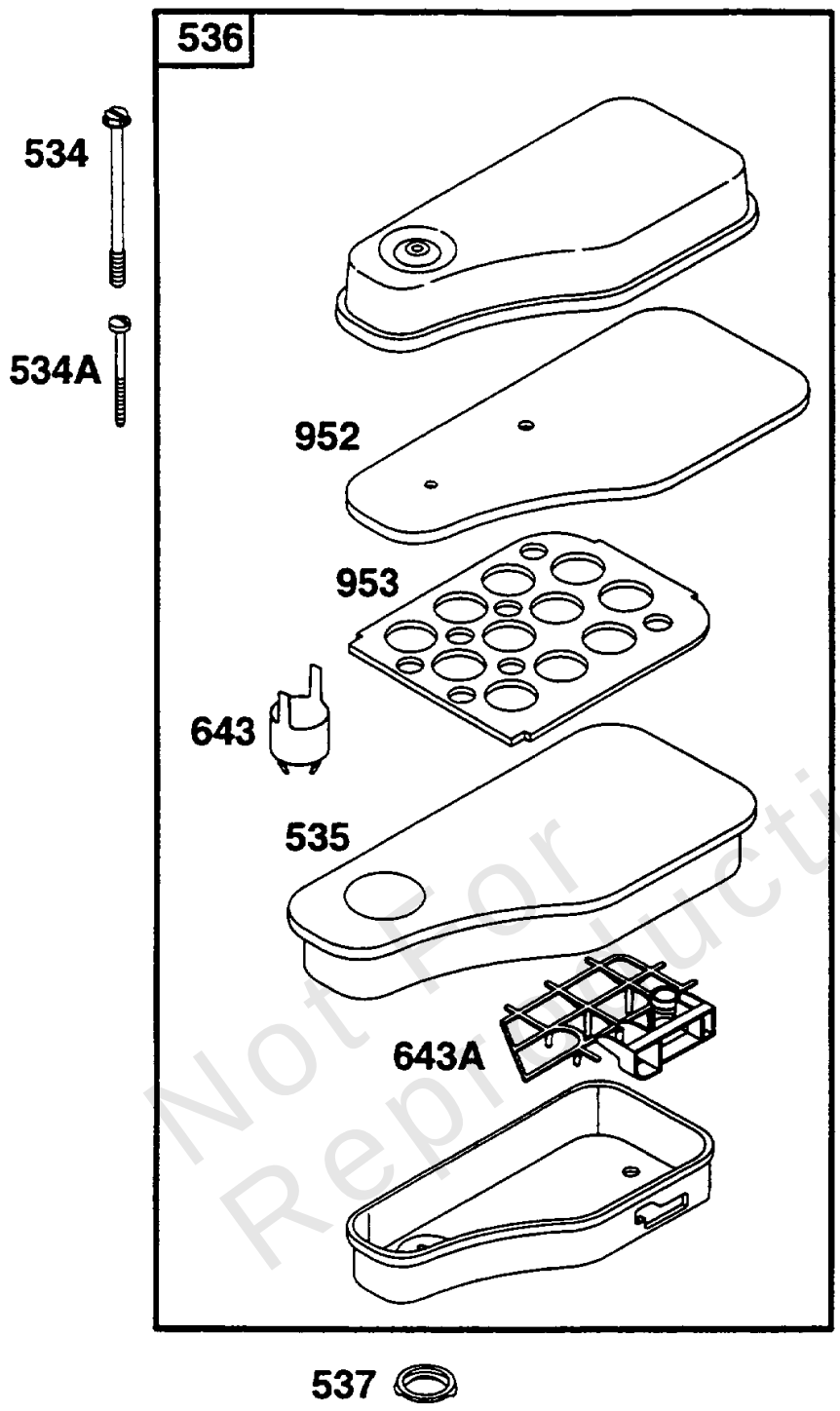

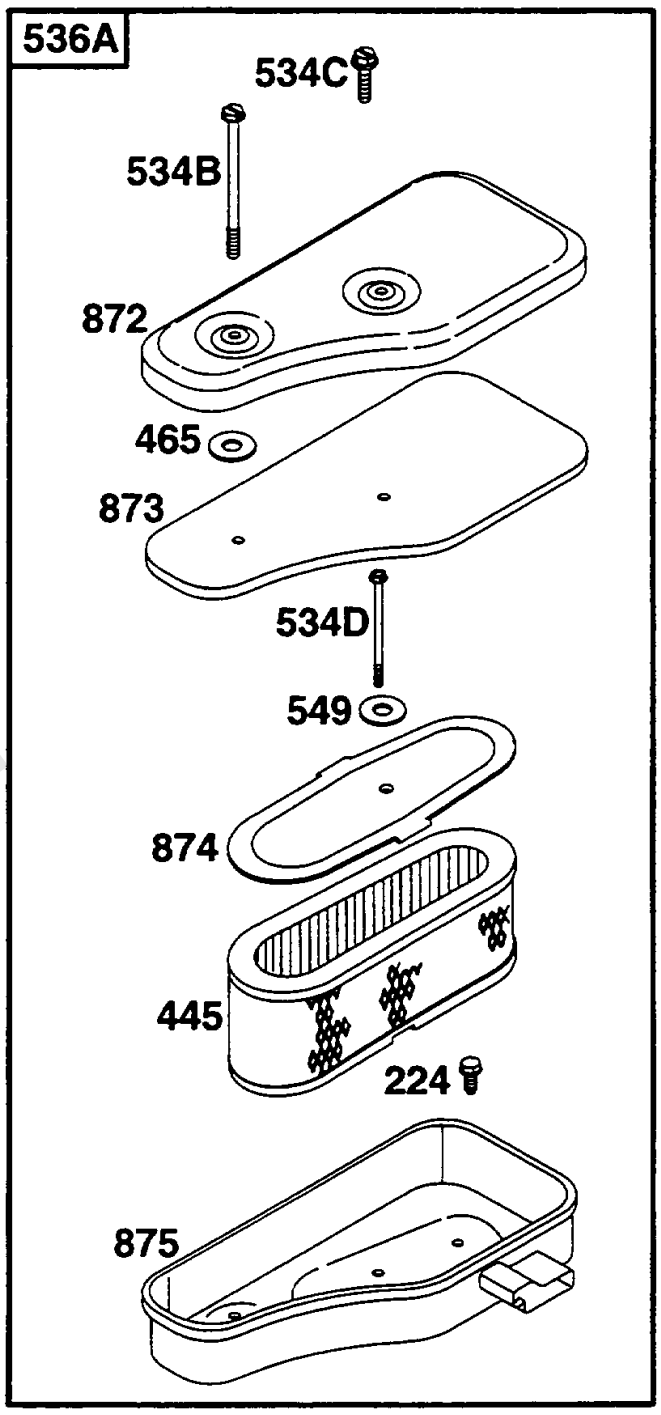

Not For Reproduction

Copyright © Briggs & Stratton. All Rights reserved

Air Cleaner Grps

REF NO	PART NO	QTY	DESCRIPTION
224	94902		SCREW -(Brake)
445	393725		FILTER, A/C Cartridge
465	271118		WASHER
534A	93622		SCREW
534B	93911		SCREW
534D	93910		SCREW
534C	93913		SCREW
534	93323		SCREW
535	270843		FILTER, A/C Cartridge
536A	393749		CLEANER, Air
536	391786		CLEANER, Air
537	270853		GASKET, Air Cleaner -(Air Cleaner)
537	270853		GASKET, Air Cleaner -Included in Gasket Set-Part No. 393411
549	270978		WASHER -(Below Internal Screw Head)
643A	280118		SUPPORT, Foam Element
643	222380		SPACER, Air Cleaner
872	396966		COVER, Air Cleaner -(Includes Gasket)
873	397971		GASKET, Air Cleaner
874	222898		RETAINER, Air Filter
875	397321		BASE, Air Cleaner
952	222495		SPACER, Air Cleaner
953	222382		SCREEN, Air Cleaner

Not For Reproduction

Copyright © Briggs & Stratton. All Rights reserved

Mfg. No: 252707-0181-99

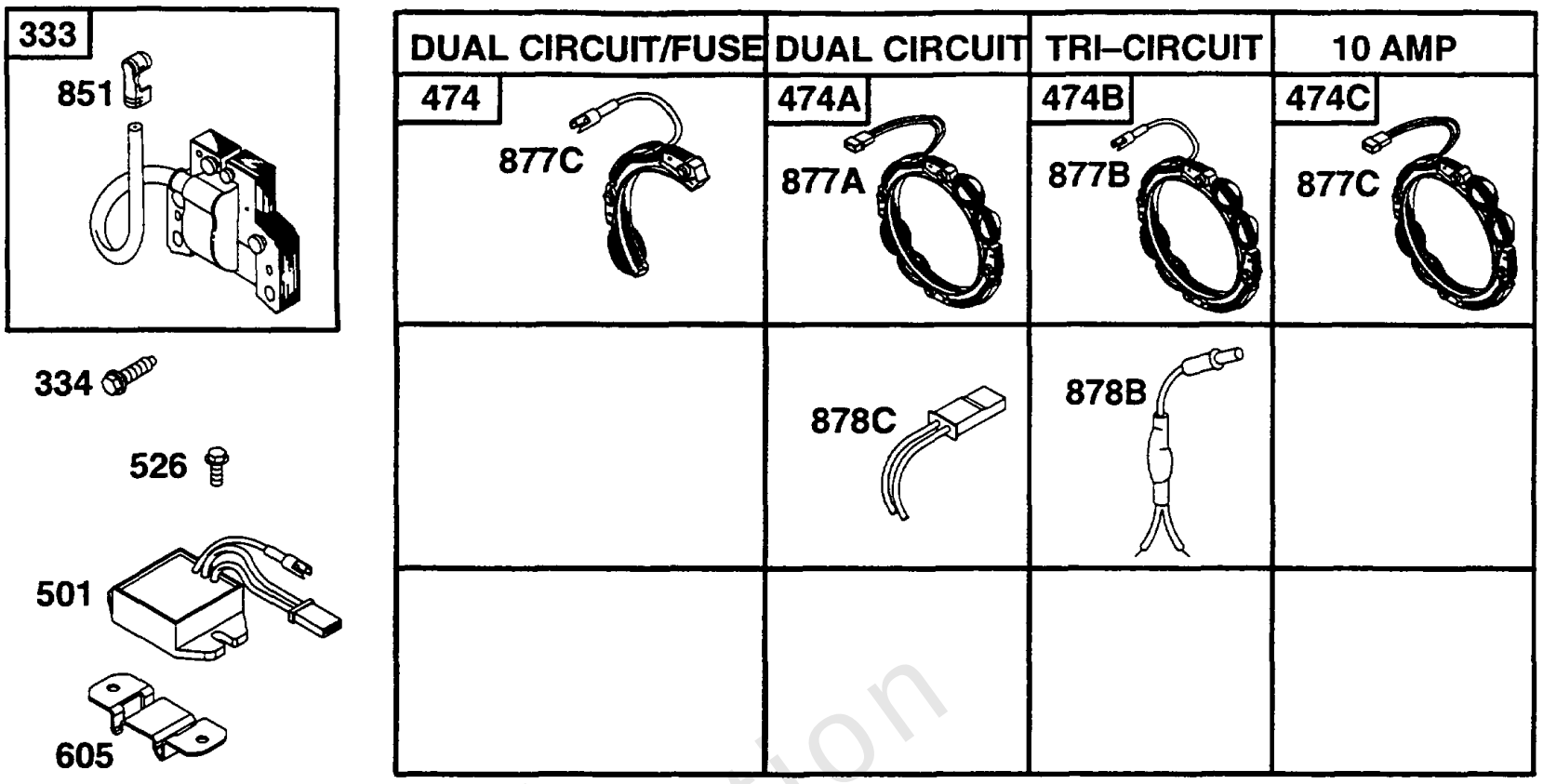

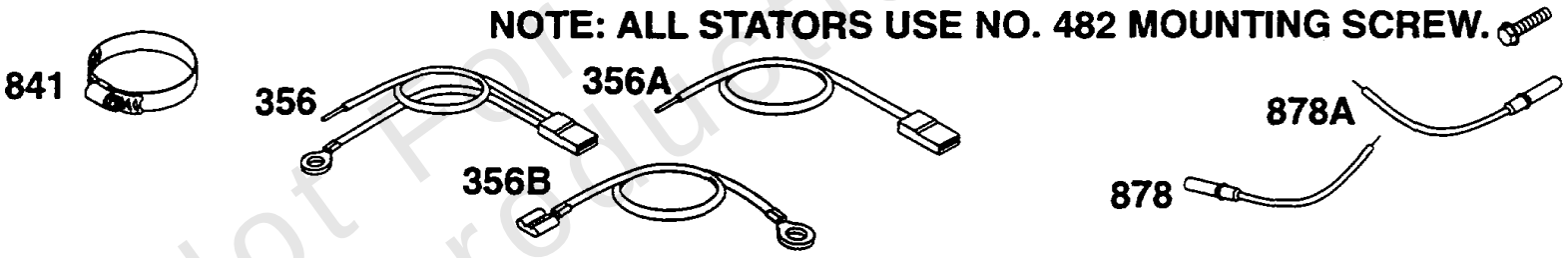

NOTE: ALL STATORS USE NO. 482 MOUNTING SCREW.

Not For Reproduction

Copyright © Briggs & Stratton. All Rights reserved

Alternator Chart, Elect

REF NO	PART NO	QTY	DESCRIPTION
333	398811		ARMATURE, Magneto -(Magnetron Ignition)
334	94731		SCREW -(Magneto)
356B	399323		WIRE, Stop
356A	494328		WIRE, Stop
356	398808		WIRE, Stop -(Cut To Required Length)
482	93621		SCREW -(Tapping)
501	394890		REGULATOR -(10, 13, or 16 Amp, Depending on Size of Flywheel Magnets)
526	93343		SCREW -(Control Panel)
605	222934		BRACKET, Mounting
841	393514		CLAMP
851	493880		TERMINAL, Spark Plug
877A	393456		WIRE/CONNECTOR, Alternator
877B	393537		WIRE/CONNECTOR, Alternator -(Tri Circuit) (9 Amp)
877C	393814		WIRE/CONNECTOR, Alternator -(10 Amp Regulated)
878B	392606		HARNESS, Alternator -(Tri Circuit)
878A	393422		WIRE ASSEMBLY -(Dc Only)
878C	393362		HARNESS, Alternator -(Dual Circuit)
878	393362		HARNESS, Alternator -(Dual Circuit)

Not For Reproduction

Copyright © Briggs & Stratton. All Rights reserved

Blower Hsg, Flywheel, Screen

Mfg. No: 252707-0181-99

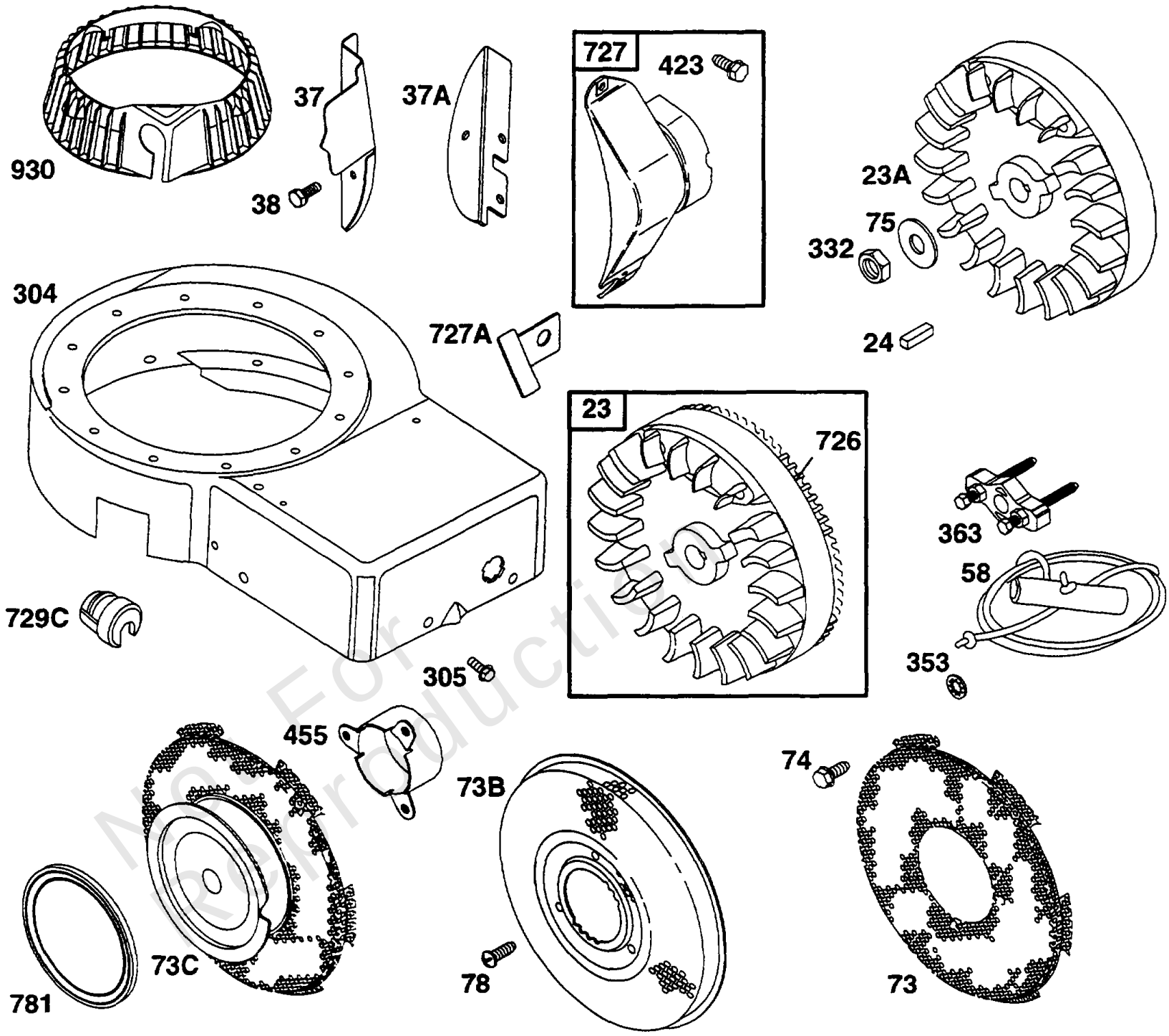

Not For Reproduction

Copyright © Briggs & Stratton. All Rights reserved

Blower Hsg, Flywheel, Screen

REF NO	PART NO	QTY	DESCRIPTION
23A	498896		FLYWHEEL -(Rewind Starter)
24	222698		KEY, Flywheel
37A	222475		GUARD, Flywheel
37	224886		GUARD, Flywheel -(Engines with Rope or Recoil Starter)
38	94811		SCREW
58	69932		GRIP, Starter Rope
73B	224517		SCREEN, Rotating
73C	496084		SCREEN/PULLEY
73	224874		SCREEN, Rotating
74	93758		SCREW -(Rotating Screen)
75	225136		WASHER -(Flywheel)
78	94626		SCREW
304	398333		HOUSING, Blower
305	94786		SCREW -(1/2)
332	94877		NUT -(Flywheel)
353	92791		WASHER
423	94903		SCREW
455	222561		CUP, Flywheel
726	399676		GEAR, Ring -(Aluminum)
727A	224871		GUARD, Flywheel
727	395405		COVER, Starter Drive
729C	281159		CLIP, Wire
781	280068		CAP, Starter Pulley
930	280685		GUARD, Rewind

Not For Reproduction

Copyright © Briggs & Stratton. All Rights reserved

Carburetor Assy

Mfg. No: 252707-0181-99

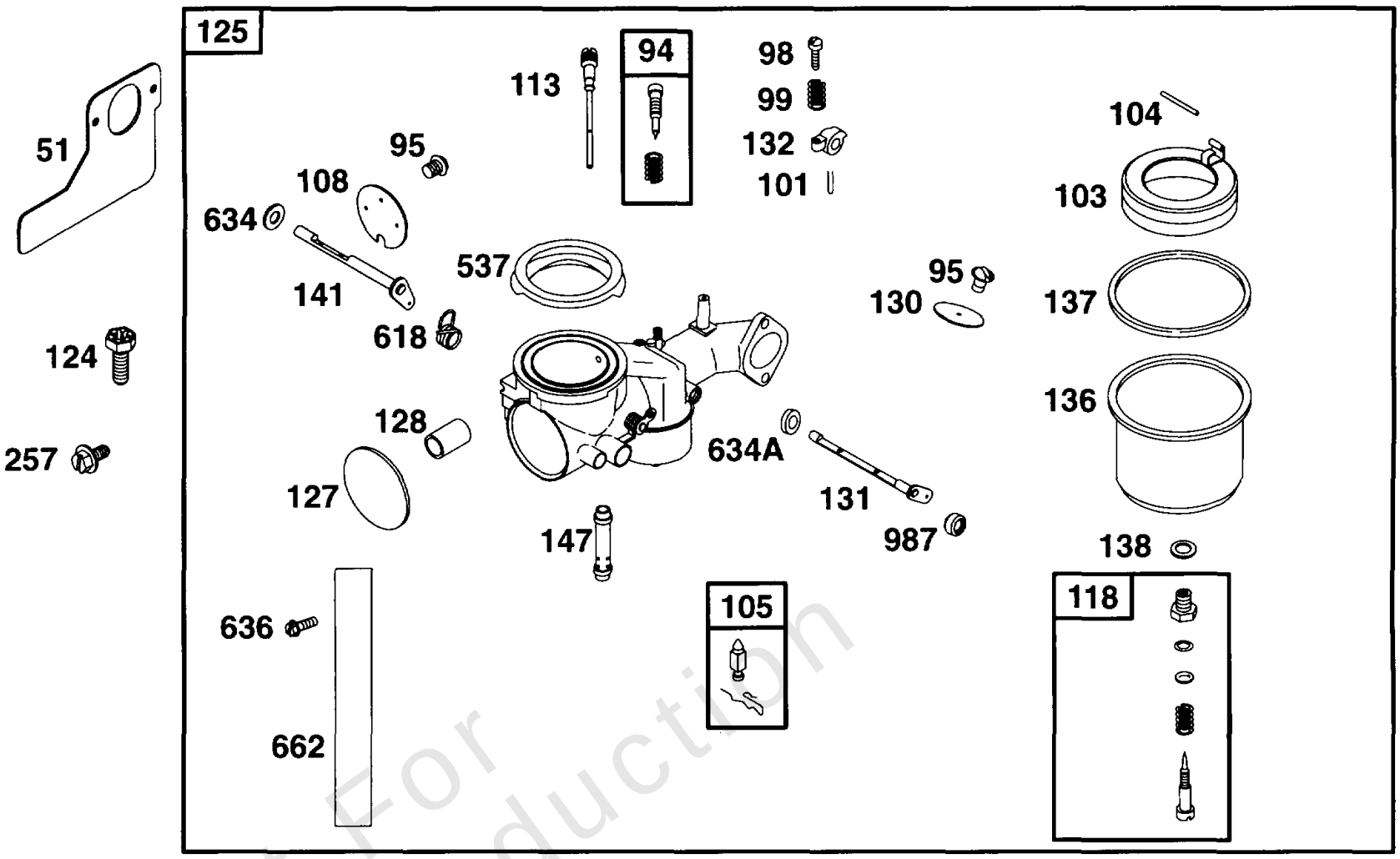

Not For Reproduction

Carburetor Assy

REF NO	PART NO	QTY	DESCRIPTION
51	270872		GASKET, Intake -Included in Valve Overhaul Gasket Set-Part No. 498537. Included in Gasket Set-Part No. 393411. Included in Carburetor Kit-Part No. 394698
94	292681		VALVE, Idle Mixture -Included in Carburetor Kit-Part No. 394698
95	93499		SCREW -(Throttle Valve)
98	91920		SCREW -(8-32 X 5/8)
99	26157		SPRING, Compression
101	93043		PIN, Shaft
104	230896		PIN, Float Hinge -Included in Carburetor Kit-Part No. 394698
104	231435		PIN, Float Hinge -Included in Carburetor Kit-Part No. 394698
105	394681		KIT, Needle/Seat -(Gravity Feed) Included in Carburetor Kit-Part No. 394698
105	394683		KIT, Needle/Seat -(Pump Feed)
108	222010		VALVE, Choke
113	299740		NOZZLE, Carburetor -Included in Carburetor Kit-Part No. 394698
118	396568		VALVE, Float Needle -Included in Carburetor Kit-Part No. 394698
124	94913		SCREW -(Intake Manifold)
125	491026		CARBURETOR -(Choke-A-Matic)
127	221997		PLUG, Welch -Included in Carburetor Kit-Part No. 394698
128	211960		VENTURI, Carburetor
130	222433		VALVE, Throttle
131	491006		KIT, Throttle Shaft
132	211712		STOP, Throttle
136	221995		BOWL, Float
137	270511		GASKET, Float Bowl
138	222014		WASHER -(Float Bowl)
141	390684		SHAFT, Choke -(Choke-A-Matic)
147	231323		SCREW -(Nozzle)
257	93543		SCREW -(10-32 X 3/8)
537	270853		GASKET, Air Cleaner -Included in Gasket Set-Part No. 393411
537	270853		GASKET, Air Cleaner -(Air Cleaner)
618	261116		SPRING, Choke Return
634A	271853		WASHER -(Foam)
634	270382		WASHER -(Foam)
662	222311		BRACKET, Support
987	398970		SEAL, Throttle Shaft -(Lmt 46, 49, 50, 51, 53, 86)

Not For Reproduction

Copyright © Briggs & Stratton. All Rights reserved

Mfg. No: 252707-0181-99

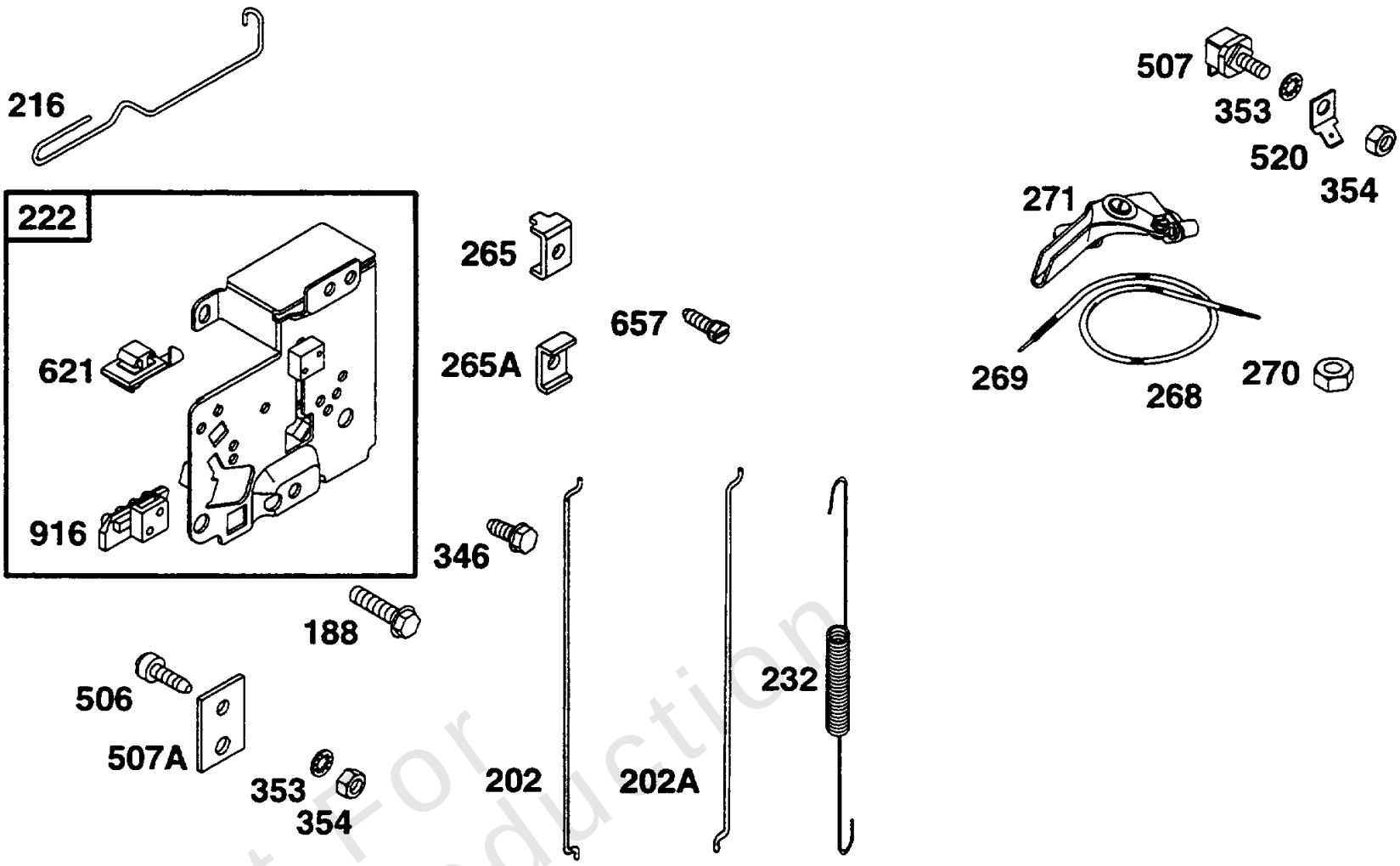

Not For Reproduction

REF NO	PART NO	QTY	DESCRIPTION
188	94627		SCREW -(Fuel Tank)
202A	261609		LINK, Mechanical Governor
202	262348		LINK, Mechanical Governor
216	261610		LINK, Choke
222	396349		BRACKET, Control -(Not Illustrated) -Used Before Code Date 82110311
222	491593		BRACKET, Control -(Remote and Manual Choke)
222	491594		BRACKET, Control -(Choke-A-Matic)
232	260584		SPRING/LINK, Mechanical Governor -Used After Code Date 82110200
232	261197		SPRING/LINK, Mechanical Governor -Used Before Code Date 82110311
265A	22372		CLAMP, Casing
265	221535		CLAMP, Casing -(Stamped Steel)
268	65616		CASING, Control Wire -(Cut To Required Length)
269	26633		WIRE, Control -(Cut To Required Length)
270	63426		NUT -(Control Wire Casing)
271	290568		LEVER, Control
346	94896		SCREW -(Muffler Deflector)
353	92791		WASHER
354	90576		NUT -(Ground Terminal)
506	90200		SCREW -(8-32 X 1/2)
507A	66895		INSULATOR
507	398525		INSULATOR
520	93722		TERMINAL, Ground
621	396847		SWITCH, Stop
657	94906		SCREW
916	280321		RACK, Governor Gear -(Remote and Manual Choke)
916	280324		RACK, Governor Gear -(Choke-A-Matic)

Not For Reproduction

Copyright © Briggs & Stratton. All Rights reserved

Mfg. No: 252707-0181-99

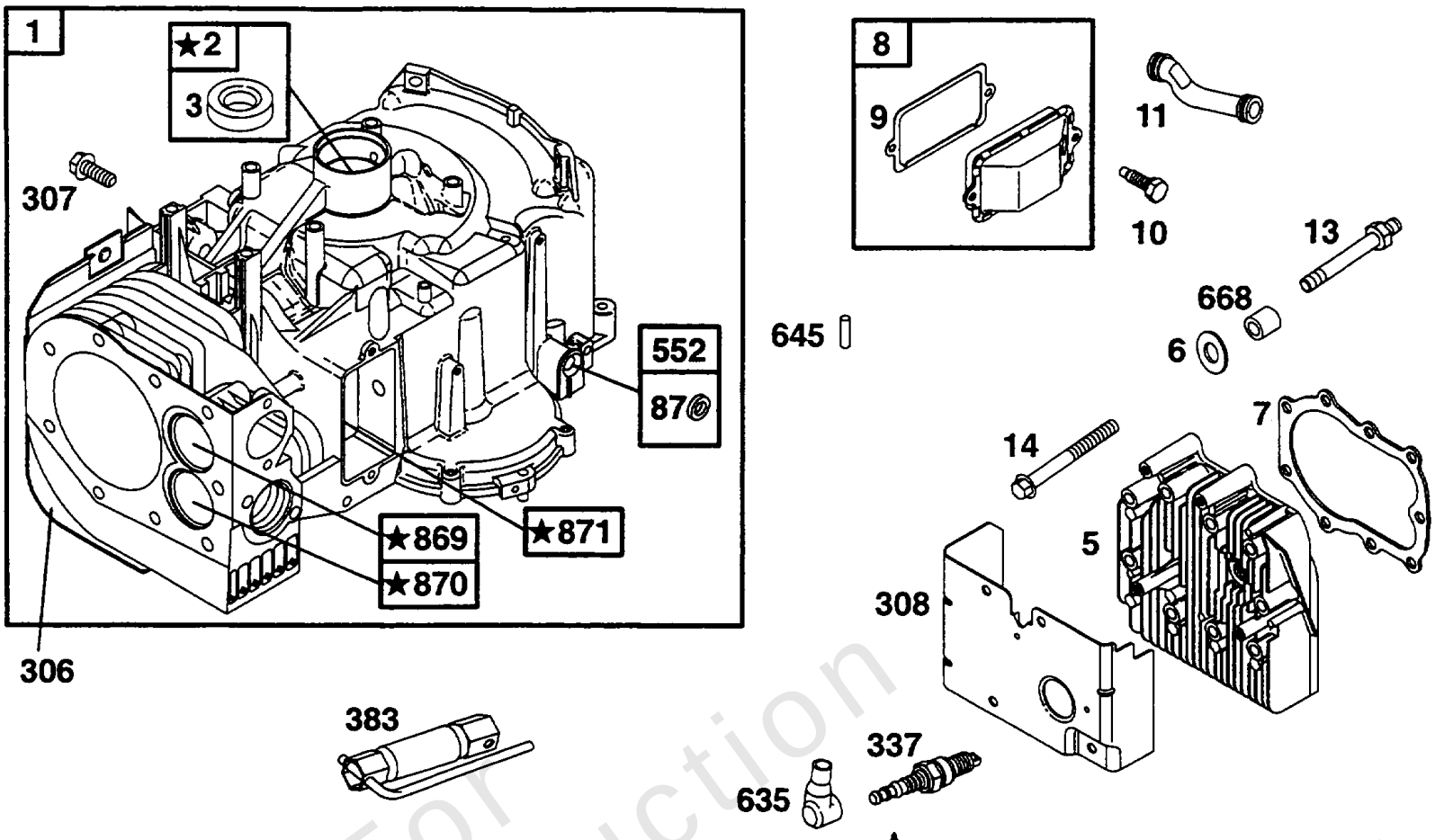

1058 OWNER'S MANUAL

1019 LABEL KIT

★ **REQUIRES SPECIAL TOOLS TO INSTALL. SEE REPAIR INSTRUCTION MANUAL.**

Not For Reproduction

Copyright © Briggs & Stratton. All Rights reserved

Cylinder, Head

REF NO	PART NO	QTY	DESCRIPTION
1	396448		CYLINDER ASSEMBLY -Used Before Code Date 82080100
1	495728		CYLINDER ASSEMBLY -Used After Code Date 82073100
2	399265		KIT, Bushing/Seal -(Magneto Side)
3	391086		SEAL, Oil -Included in Gasket Set-Part No. 393411
5	212914		HEAD, Cylinder
6	22963		WASHER
7	271866		GASKET, Cylinder Head -Included in Valve Overhaul Gasket Set-Part No. 498537. Included in Gasket Set-Part No. 393411
8	495735		BREATHER ASSEMBLY
9	27803		GASKET, Rocker Cover -Included in Valve Overhaul Gasket Set-Part No. 498537. Included in Gasket Set-Part No. 393411
10	94621		SCREW -(Breather Assembly)
11	280100		TUBE, Breather
13	94776		STUD -(3 15/16)
14	94622		SCREW -(3)
87	491323		SEAL, Governor Shaft -Included in Gasket Set-Part No. 393411
87	491323		SEAL, Governor Shaft
306	224882		SHIELD, Cylinder
307	94930		SCREW -(Cylinder Shield)
308	224897		COVER, Cylinder Head
337	298809		PLUG, Spark
337	802592		PLUG, Spark -(Resistor)
383	89838		WRENCH, Spark Plug
552	491986		BUSHING, Governor Crank -(1/4 I.D.)
635	66538		BOOT, Spark Plug
668	231186		SPACER
869	261463		SEAT, Valve -(Intake)
870	262924		SEAT, Valve -(Exhaust)
871	231218		BUSHING, Valve Guide -(Intake)
1019	491195		KIT, Label
1058	270862		MANUAL, Operator's

Not For Reproduction

Copyright © Briggs & Stratton. All Rights reserved

Mfg. No: 252707-0181-99

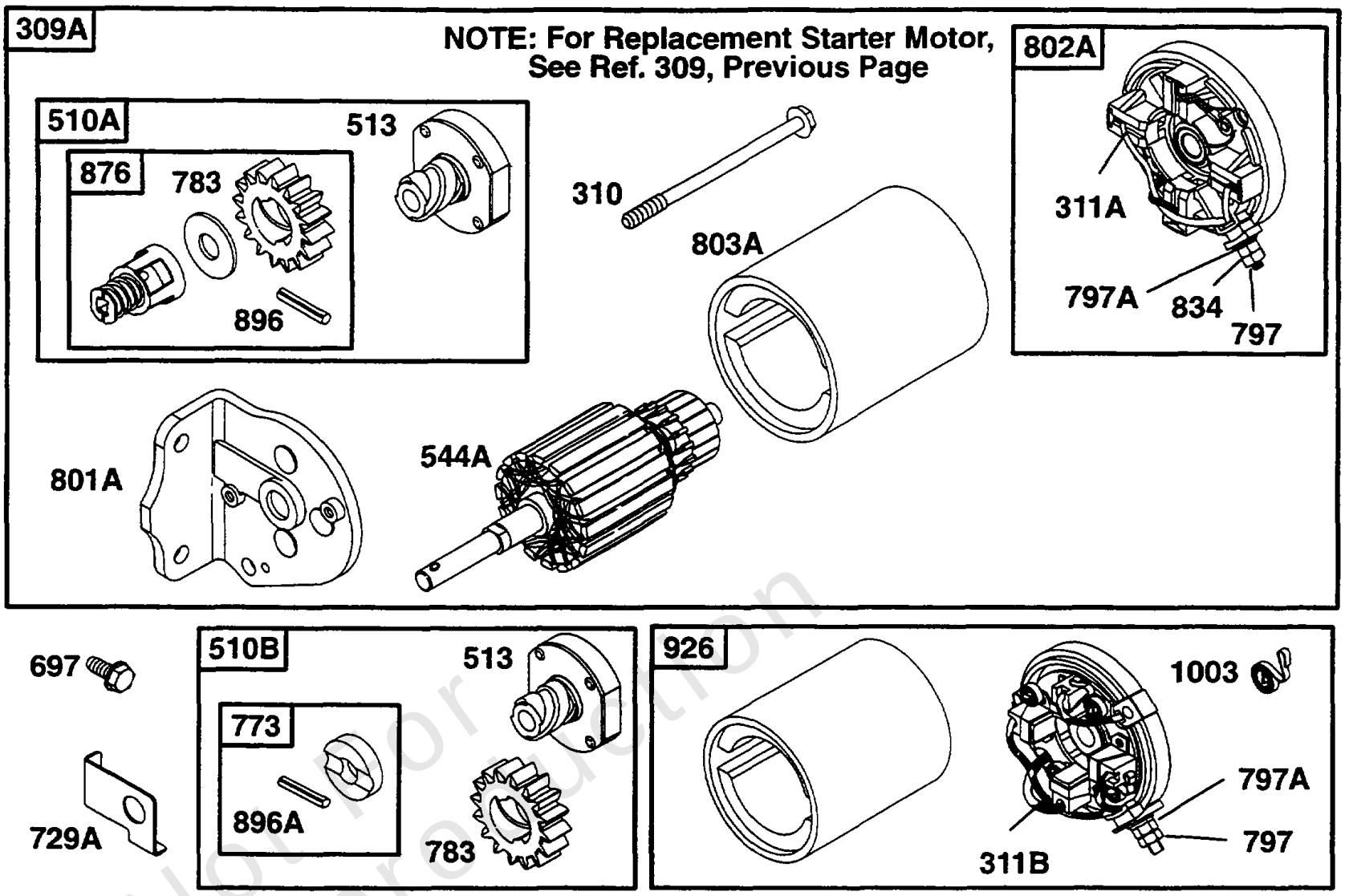

Not for Reproduction

Electric Starter

REF NO	PART NO	QTY	DESCRIPTION
309A	-----		No Nomenclature -(For Replacement Starter Motor, See Ref 309, Previous Page.)
310	94003		SCREW -(3 5/8 Housing)
310	94169		SCREW -(4 1/2 Housing)
310	95035		SCREW -(4 3/8 Housing)
311B	490311		SET, Brush -(4 9/16 Housing)
311A	395538		SET, Brush -(3-5/8 or 4 3/8 Housing)
510B	391461		DRIVE, Starter -(3 1/2 Housing)
510A	495878		DRIVE, Starter -(4 3/8 Housing)
513	398003		CLUTCH, Starter
544A	390837		ARMATURE, Starter -(3 5/8 Housing)
544A	391160		ARMATURE, Starter -(3 5/8 or 4 3/8 Housing)
697	94627		SCREW -(Fuel Tank)
697	94773		SCREW
729A	224723		CLIP, Wire
773	391462		RETAINER
783	693059		GEAR, Pinion -(Aluminum Ring Gear Only)
797A	693167		NUT
797	92278		NUT -(Starting Switch)
797	93715		NUT -(Starter Terminal)
801A	394856		CAP, Drive
802A	395537		CAP, End -(3 5/8 Housing)
803A	398159		HOUSING, Starter -(3 5/8 Housing)
803A	494205		HOUSING, Starter -(4 3/8 or 4 9/16 Housing)
834	92507		WASHER
876	495877		DRIVE, Starter -(4 3/8 Housing)
896A	94192		PIN, Drive Retainer
896	94288		PIN, Drive Retainer
926	498233		KIT, Housing/Cap -(4 9/16 Housing)
1003	490316		SPRING, Brush -(4 1/2 or 4 9/16 Housing)

Not For Reproduction

Copyright © Briggs & Stratton. All Rights reserved

Mfg. No: 252707-0181-99

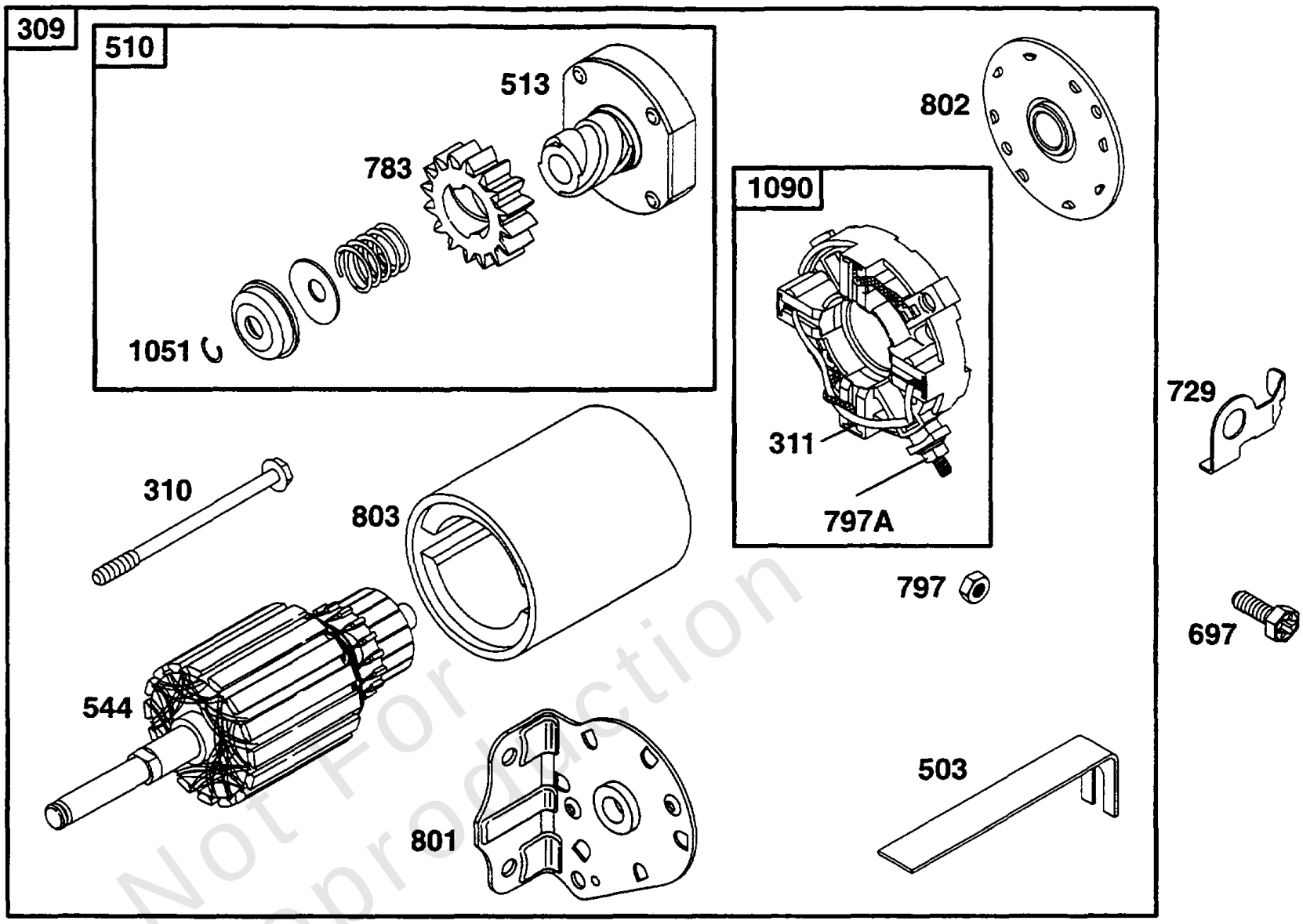

Not For Reproduction

Copyright © Briggs & Stratton. All Rights reserved

Electric Starter

REF NO	PART NO	QTY	DESCRIPTION
309	499521		MOTOR, Starter -(4 3/8 Housing Length; For Alum Ring Gear Only)
309	693054		MOTOR, Starter -(3 5/8) (Aluminum Ring Gear)
310	94003		SCREW -(3 5/8 Housing)
310	94169		SCREW -(4 1/2 Housing)
310	95035		SCREW -(4 3/8 Housing)
311	497608		SET, Brush
503	806000		STRAP, Ground -(4 9/16 Housing)
510	497606		DRIVE, Starter -(Includes 693058 And 693059 Starter Gear)
513	398003		CLUTCH, Starter
544	497603		ARMATURE, Starter -(3 5/8 Housing)
697	94627		SCREW -(Fuel Tank)
697	94773		SCREW
729	225170		CLIP, Wire
783	693059		GEAR, Pinion -(Aluminum Ring Gear Only)
797A	693167		NUT
797	92278		NUT -(Starting Switch)
797	93715		NUT -(Starter Terminal)
801	497626		CAP, Drive
802	497607		CAP, End
803	497604		HOUSING, Starter -(3 5/8 Housing)
1051	263080		RING, Retaining
1090	497605		RETAINER, Brush

Not For Reproduction

Copyright © Briggs & Stratton. All Rights reserved

Mfg. No: 252707-0181-99

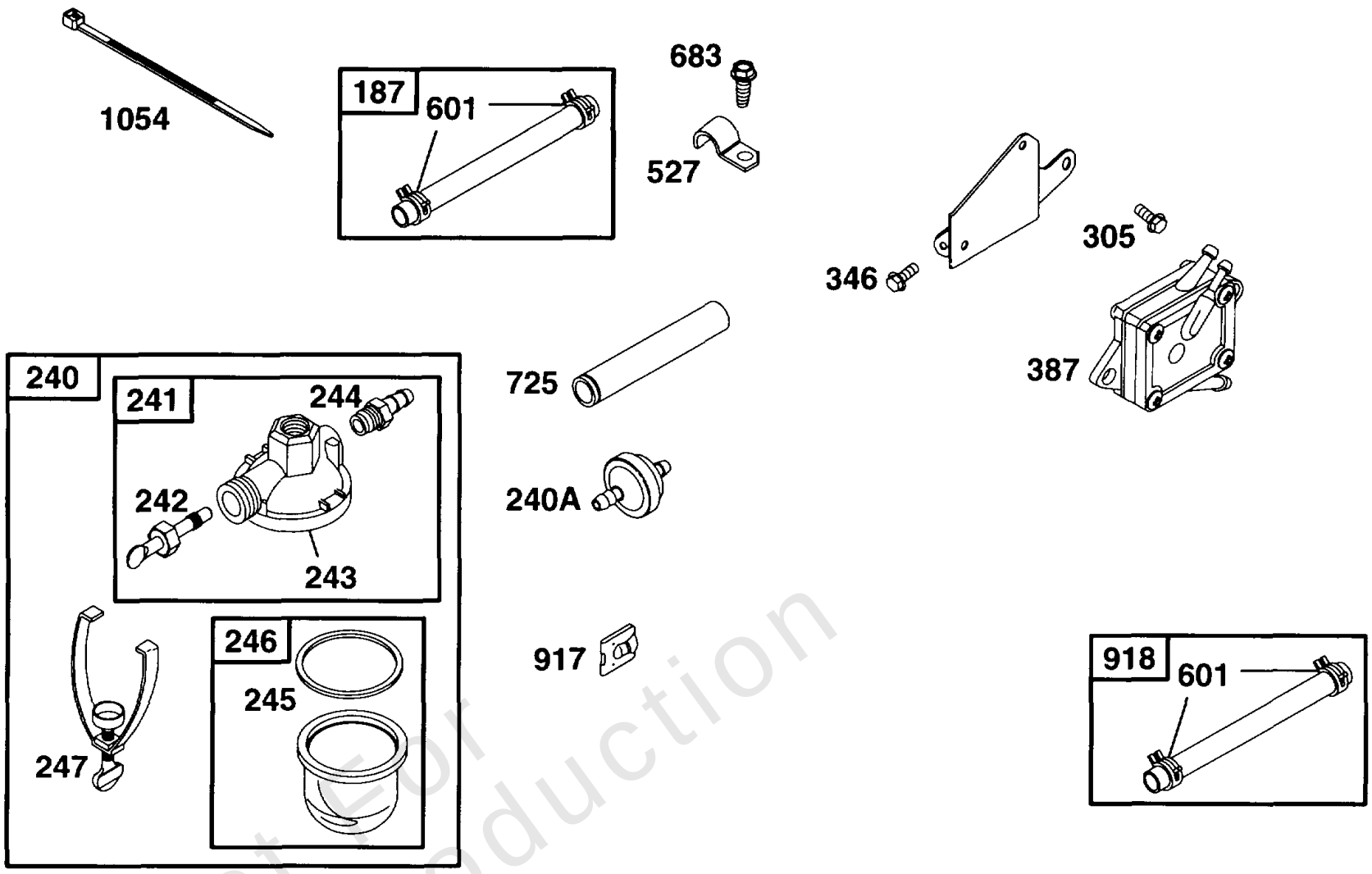

Not For Reproduction

Copyright © Briggs & Stratton. All Rights reserved

Fuel Grp

REF NO	PART NO	QTY	DESCRIPTION
187	296004		LINE, Fuel -(Cut To Required Length)
240A	298090		FILTER, Fuel
240	393169		STRAINER, Fuel
241	296005		COVER, Fuel Filter
242	295913		VALVE, Fuel Shut Off
243	22547		STRAINER, Fuel
244	230318		CONNECTOR, Hose
245	68477		GASKET, Fuel Bowl -Included in Gasket Set-Part No. 393411
246	298683		BOWL, Fuel Filter
247	99665		YOKE, Bowl
305	94786		SCREW -(1/2)
346	94896		SCREW -(Muffler Deflector)
387	491922		PUMP, Fuel
527	221428		CLAMP, Tube
601	93053		CLAMP, Hose -(Green)
601	93807		CLAMP, Hose -(Black)
683	94874		SCREW -(Muffler Guard)
725	222175		SHIELD, Heat
917	223271		VALVE, Handle Shutoff
918	393815		HOSE, Vacuum -(Cylinder To Impulse Pump)(Cut To Required Length)
1054	280275		TIE, Cable

Not For Reproduction

Copyright © Briggs & Stratton. All Rights reserved

Fuel Tank Grp

Mfg. No: 252707-0181-99

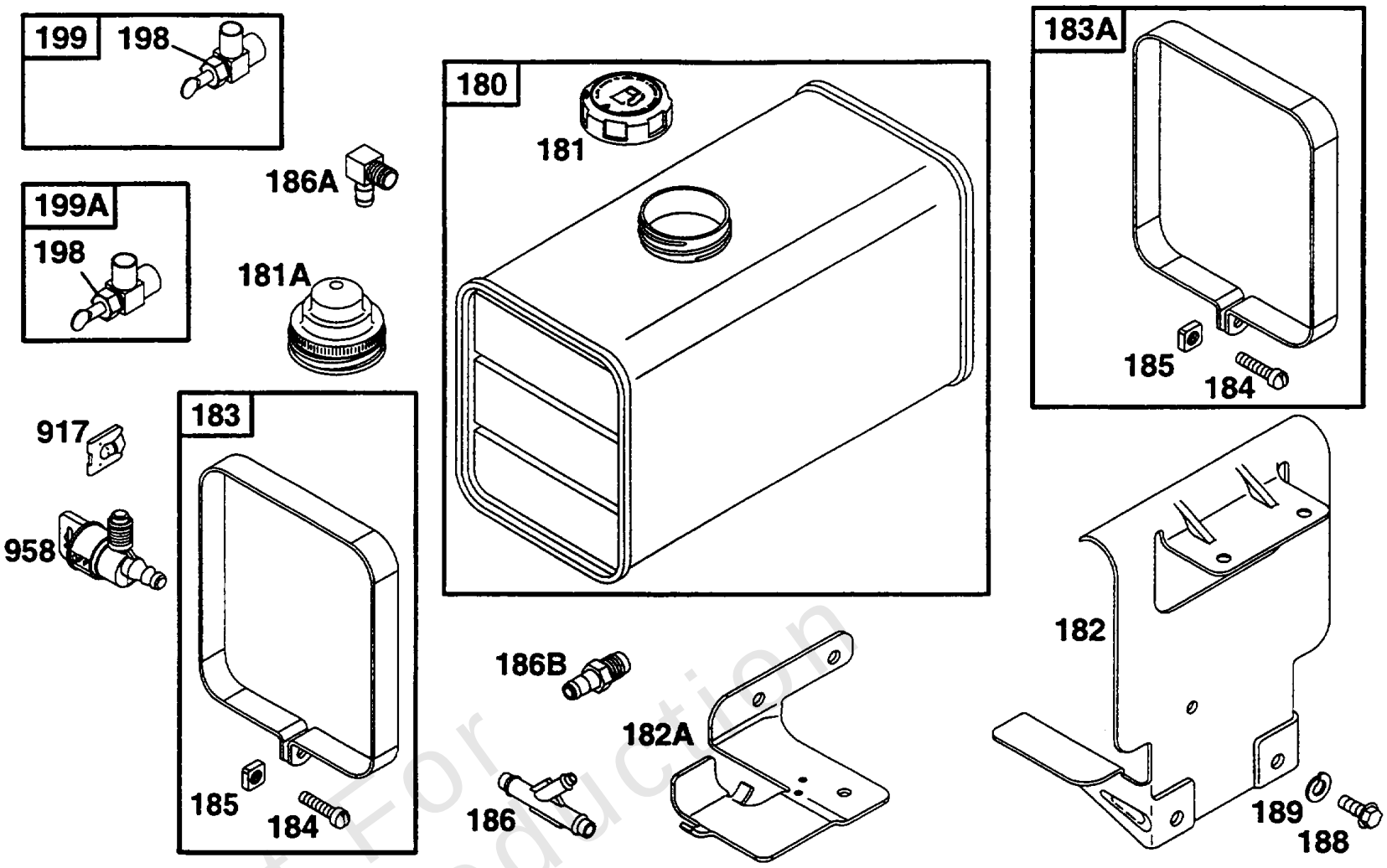

Not For Reproduction

Fuel Tank Grp

REF NO	PART NO	QTY	DESCRIPTION
180	292415		TANK, Fuel -(8 Quart)
180	390225		TANK, Fuel -(3 Quart) (Plastic)
181A	392305		CAP, Fuel Tank -(Metal)
181	493988		CAP, Fuel Tank -(Plastic)
182A	224884		BRACKET, Fuel Tank -(L.H.)
182	222980		BRACKET, Fuel Tank -(R.H.)
183A	496852		STRAP, Fuel Tank -(L.H.)
183	496853		STRAP, Fuel Tank -(R.H.)
184	94286		SCREW
185	90970		NUT -(1/4-20)
186B	230318		CONNECTOR, Hose
186A	67218		CONNECTOR, Hose
186	67218		CONNECTOR, Hose
188	94627		SCREW -(Fuel Tank)
198	293934		VALVE, Fuel Shut Off
199	492649		VALVE, Fuel Shut Off
917	223271		VALVE, Handle Shutoff
958	399517		VALVE, Fuel Shut Off -(Plastic)

Not For Reproduction

Mfg. No: 252707-0181-99

1095 VALVE OVERHAUL GASKET SET

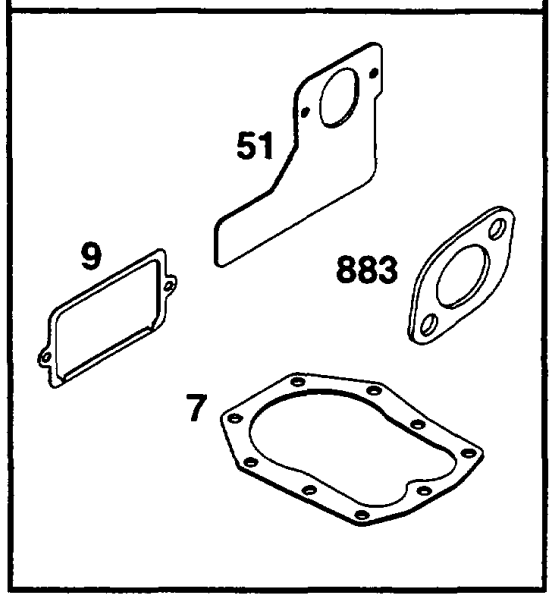

358 GASKET SET

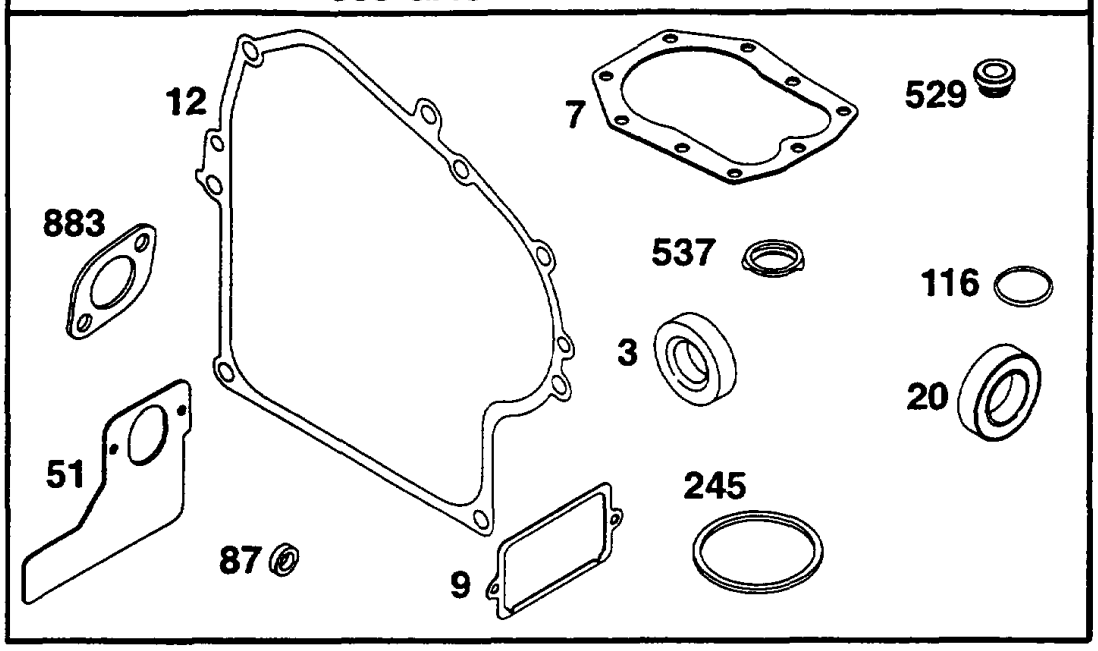

121 CARBURETOR KIT

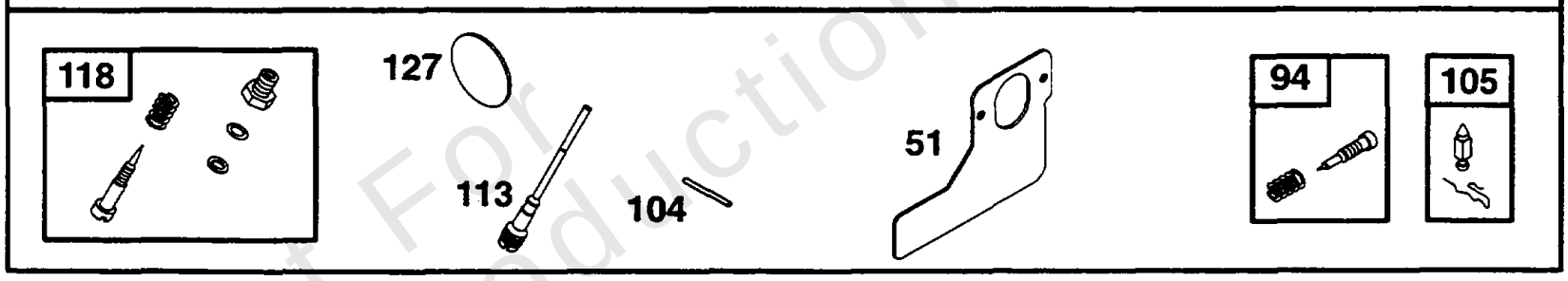

Not For Reproduction

Copyright © Briggs & Stratton. All Rights reserved

Gasket Sets

REF NO	PART NO	QTY	DESCRIPTION
3	391086		SEAL, Oil -Included in Gasket Set-Part No. 393411
7	271866		GASKET, Cylinder Head -Included in Valve Overhaul Gasket Set-Part No. 498537. Included in Gasket Set-Part No. 393411
9	27803		GASKET, Rocker Cover -Included in Valve Overhaul Gasket Set-Part No. 498537. Included in Gasket Set-Part No. 393411
12	270915		GASKET, Crankcase -(.005) Included in Gasket Set-Part No. 393411
12	270916		GASKET, Crankcase -(.009) Included in Gasket Set-Part No. 393411
12	271702		GASKET, Crankcase -(.015) Included in Gasket Set-Part No. 393411
51	270872		GASKET, Intake -Included in Valve Overhaul Gasket Set-Part No. 498537. Included in Gasket Set-Part No. 393411. Included in Carburetor Kit-Part No. 394698
87	491323		SEAL, Governor Shaft -Included in Gasket Set-Part No. 393411
87	491323		SEAL, Governor Shaft
94	292681		VALVE, Idle Mixture -Included in Carburetor Kit-Part No. 394698
104	230896		PIN, Float Hinge -Included in Carburetor Kit-Part No. 394698
104	231435		PIN, Float Hinge -Included in Carburetor Kit-Part No. 394698
105	394681		KIT, Needle/Seat -(Gravity Feed) Included in Carburetor Kit-Part No. 394698
105	394683		KIT, Needle/Seat -(Pump Feed)
113	299740		NOZZLE, Carburetor -Included in Carburetor Kit-Part No. 394698
116	270920		SEAL, O-Ring -(Oil Fill) Included in Gasket Set-Part No. 393411
118	396568		VALVE, Float Needle -Included in Carburetor Kit-Part No. 394698
121	394698		KIT, Carburetor Overhaul
127	221997		PLUG, Welch -Included in Carburetor Kit-Part No. 394698
245	68477		GASKET, Fuel Bowl -Included in Gasket Set-Part No. 393411
358	492653		GASKET SET, Engine
529	281370		SEAL, O-Ring -Included in Gasket Set-Part No. 393411
537	270853		GASKET, Air Cleaner -Included in Gasket Set-Part No. 393411
537	270853		GASKET, Air Cleaner -(Air Cleaner)
883	272293		GASKET, Exhaust -Included in Valve Overhaul Gasket Set-Part No. 498537. Included in Gasket Set-Part No. 393411
1095	498537		GASKET SET, Valve

Not For Reproduction

Copyright © Briggs & Stratton. All Rights reserved

Mfg. No: 252707-0181-99

Not For Reproduction

Copyright © Briggs & Stratton. All Rights reserved

Governor Spring

REF NO	PART NO	QTY	DESCRIPTION
209	260871		SPRING, Governor -(2700 To 3300 RPM) -Used After Code Date 87030100
209	261129		SPRING, Governor -Used Before Code Date 87030200

Not For Reproduction

Copyright © Briggs & Stratton. All Rights reserved

Mfg. No: 252707-0181-99

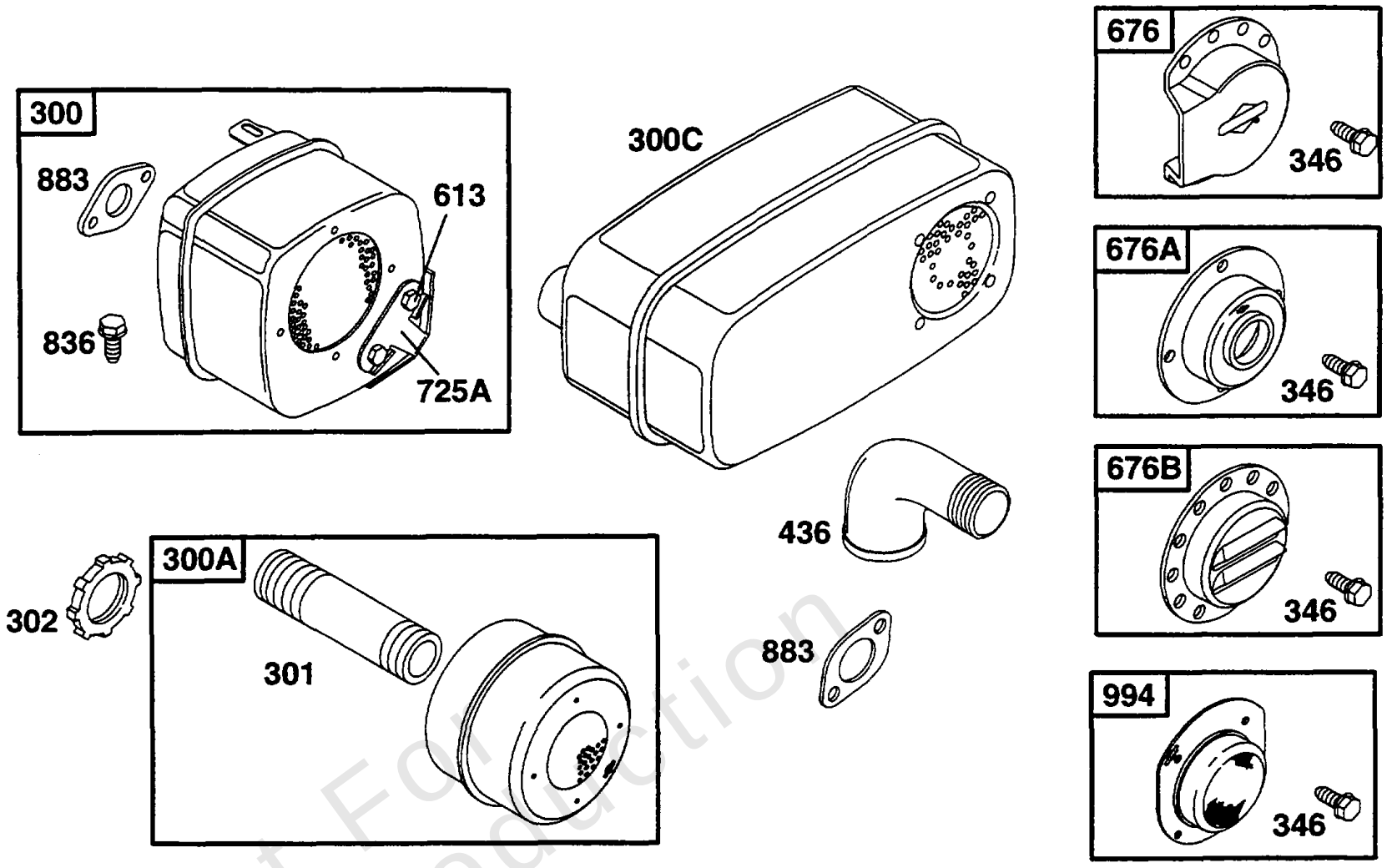

Not For Reproduction

Copyright © Briggs & Stratton. All Rights reserved

Muffler Grp

REF NO	PART NO	QTY	DESCRIPTION
300C	498984		MUFFLER
300A	391569		MUFFLER
300	491413		MUFFLER -(Square Lo Tone)
301	93768		PIPE, Exhaust -(5 1/4)
302	261564		LOCKNUT -(Muffler and Elbow)
346	94896		SCREW -(Muffler Deflector)
436	91308		MANIFOLD, Exhaust -(1 Street)
613	93927		SCREW -(Muffler)
676A	396903		DEFLECTOR, Muffler
676B	397630		DEFLECTOR, Muffler -(Louvered Outlet)
676	393761		DEFLECTOR, Muffler -(Side Outlet)
725A	223023		SHIELD, Heat
836	94729		SCREW
883	272293		GASKET, Exhaust -Included in Valve Overhaul Gasket Set-Part No. 498537. Included in Gasket Set-Part No. 393411
994	392390		ARRESTOR, Spark

Not For Reproduction

Copyright © Briggs & Stratton. All Rights reserved

Mfg. No: 252707-0181-99

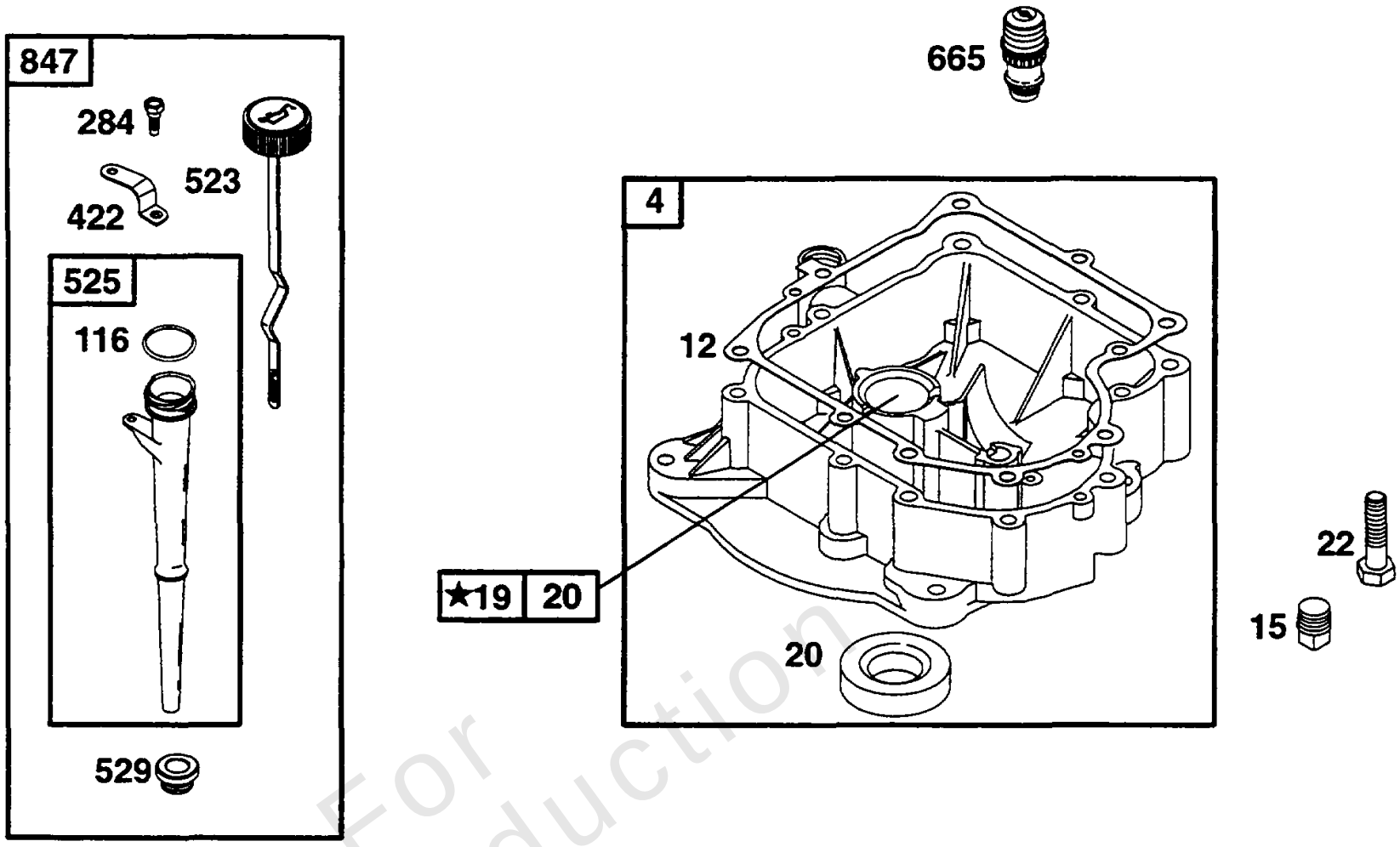

★ REQUIRES SPECIAL TOOLS TO INSTALL. SEE REPAIR INSTRUCTION MANUAL.

Not For Reproduction

Oil Fill, Sump

REF NO	PART NO	QTY	DESCRIPTION
4	391784		SUMP, Engine
12	270915		GASKET, Crankcase -(.005) Included in Gasket Set-Part No. 393411
12	270916		GASKET, Crankcase -(.009) Included in Gasket Set-Part No. 393411
12	271702		GASKET, Crankcase -(.015) Included in Gasket Set-Part No. 393411
15	94239		PLUG, Oil Drain -(Square Head)
19	399264		KIT, Bushing/Seal -(PTO Side)
116	270920		SEAL, O-Ring -(Oil Fill) Included in Gasket Set-Part No. 393411
284	94602		SCREW -(Spark Arrestor)
422	224872		BRACKET, Oil Fill
523	495229		DIPSTICK
525	280134		TUBE, Dipstick
529	281370		SEAL, O-Ring -Included in Gasket Set-Part No. 393411
665	296768		MINDER, Oil
847	392067		TUBE, Dipstick

Not For Reproduction

Copyright © Briggs & Stratton. All Rights reserved

Piston Grp, Crankshaft, Cam

Mfg. No: 252707-0181-99

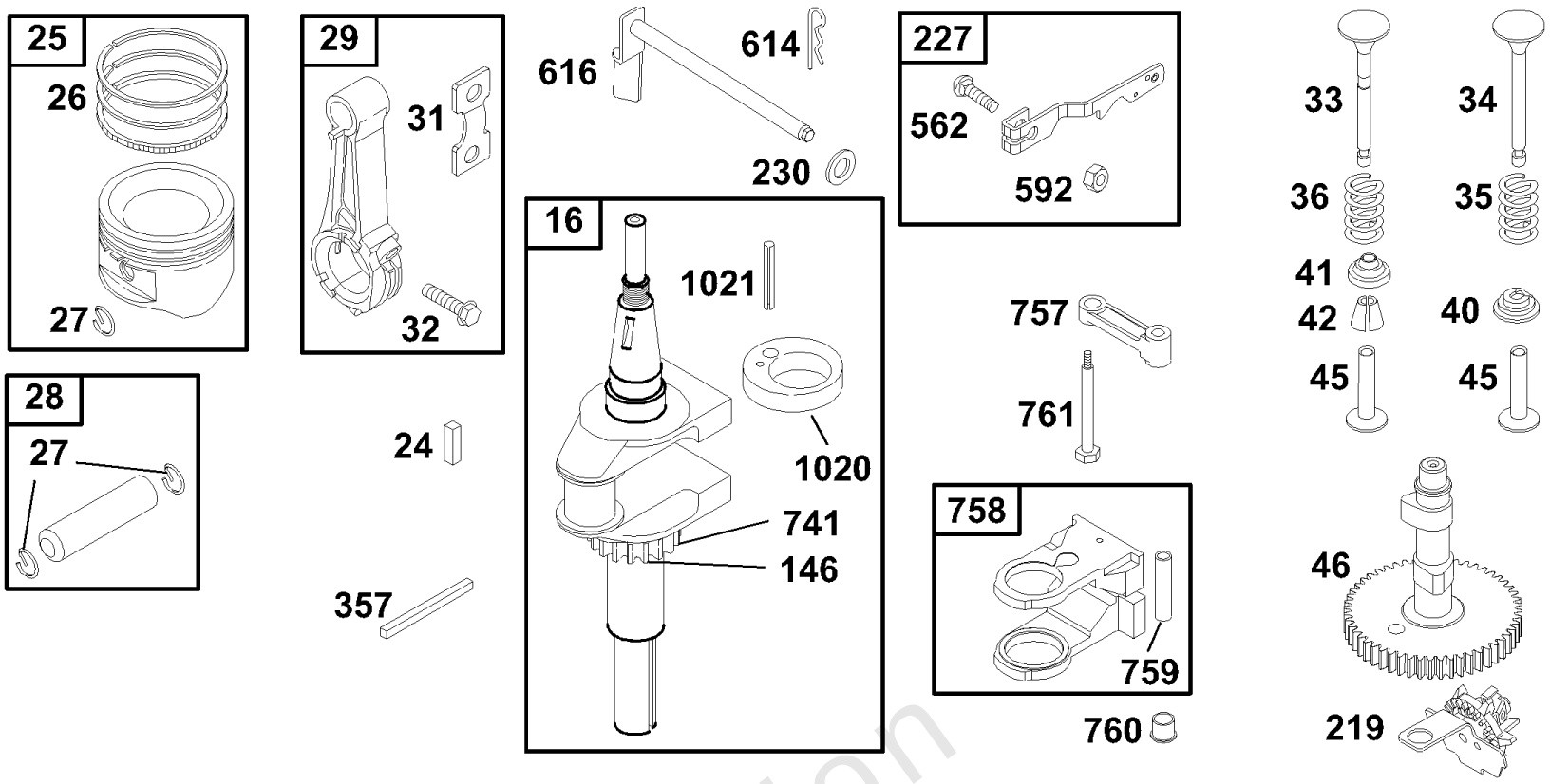

Not For Reproduction

Piston Grp, Crankshaft, Cam

REF NO	PART NO	QTY	DESCRIPTION
24	222698		KEY, Flywheel
25	391285		PISTON ASSEMBLY -(Standard)
25	391287		PISTON ASSEMBLY -(.010 Oversize)
25	391288		PISTON ASSEMBLY -(.020 Oversize)
25	391289		PISTON ASSEMBLY -(.030 Oversize)
26	391780		SET, Ring -(Standard)
26	391781		SET, Ring -(.010 Oversize)
26	391782		SET, Ring -(.020 Oversize)
26	391783		SET, Ring -(.030 Oversize)
26	392331		SET, Ring -(Standard)
27	260924		LOCK, Piston Pin
28	299691		PIN, Piston -(Standard)
28	391286		PIN, Piston -(.005 Oversize)
29	490348		ROD, Connecting -(Standard)
29	490469		ROD, Connecting -(.020 Undersize)
31	222299		LOCK, Rod Screw
32	92909		SCREW
34	261462		VALVE, Intake
35	65906		SPRING, Valve -(Intake)
36	26828		SPRING, Valve -(Exhaust)
40	221596		RETAINER, Valve -(Valves With Groove In Stem)
41	292260		RETAINER, Valve -(Exhaust Valve) (Exhaust)
42	494553		KEEPER, Valve -(Exhaust)
46	212897		CAMSHAFT
146	231086		PIN, Dowel -Used Before Code Date 82080100
146	94196		KEY, Woodruff
219	490815		GEAR, Governor
227	391733		LEVER, Governor Control -(1/4 Diameter) -Used Before Code Date 87030200
227	490927		LEVER, Governor Control -(1/4 Diameter)
230	94742		WASHER
357	91540		KEY, Drive Pulley -(1/4)
562	94907		BOLT
592	231978		NUT
614	93306		PIN, Cotter
616	495157		CRANK, Governor

Not For Reproduction

Copyright © Briggs & Stratton. All Rights reserved

Piston Grp, Crankshaft, Cam

Mfg. No: 252707-0181-99

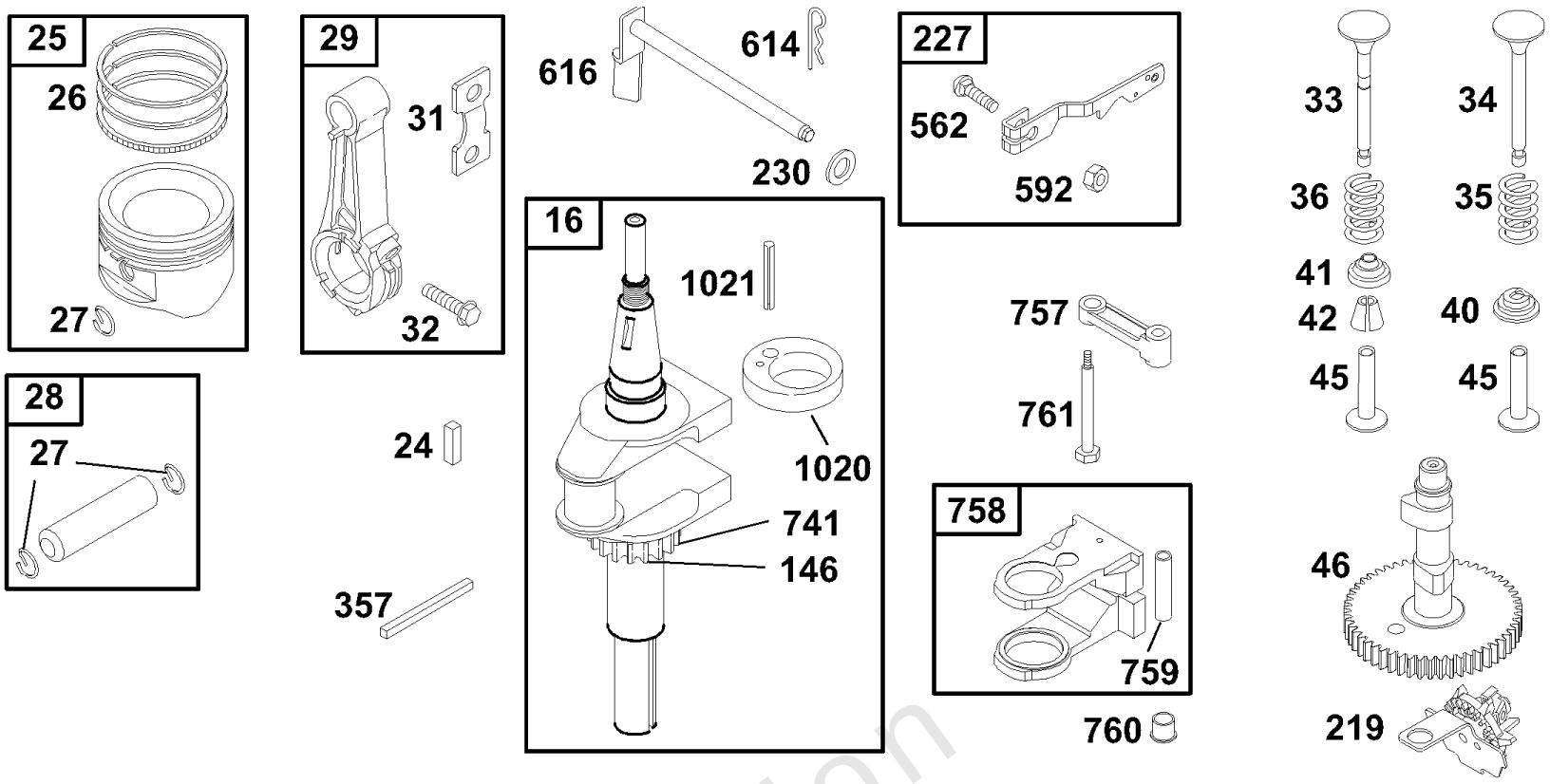

Not For Reproduction

Piston Grp, Crankshaft, Cam

REF NO	PART NO	QTY	DESCRIPTION
741	262932		GEAR, Timing
757	691714		LINK, Counterweight -(-Used After Code Date 78100411)
757	211675		LINK, Counterweight -(-Used Before Code Date 78100511)
758	692941		COUNTERWEIGHT
759	298909		PIN. Piston
760	231038		SPACER -(Counterweight)
761	691096		SCREW
1020	261242		ECCENTRIC
1021	94160		PIN, Retainer

Not For Reproduction

Copyright © Briggs & Stratton. All Rights reserved

Replacement Engine - Europe, Middle East & Africa

REF NO	PART NO	QTY	DESCRIPTION
	21R6070009H5CC0001		Replacement Engine
	-----		Top No-Load Speed: 3200
	-----		Service Note: DUAL CIRCUIT ALTERNATOR
	-----		Service Note: ELECTRIC & REWIND START
	-----		Service Note: IF ORIGINAL ENGINE IS L-HEAD/SIDEVALVE, CHECK NEW ENGINE DIMENSIONS WILL FIT EQUIPMENT
	-----		Service Note: IF ORIGINAL ENGINE IS L-HEAD/SIDEVALVE EXHAUST MODIFICATION/FABRICATION WILL BE REQUIRED
	-----		Service Note: MUFFLER FITTED

Not For Reproduction

Replacement Engine - US & Canada

REF NO	PART NO	QTY	DESCRIPTION
	2179073019	1	Replacement Engine
	-----		Top No-Load Speed: 3300 -Trim: 01
	-----		Service Note: If the replacement engine supersedes to or is a Model 210000 series engine, refer to the illustrations located after the conversion data for this model series. The overall dimensions which differ, are shown in the illustrations.
	-----		Service Note: If after making a visual inspection and it is determined the Model 210000 series engine cannot be used because of equipment interference, the original engine should be repaired with a short block and/or individual parts.

Not For Reproduction

Mfg. No: 252707-0181-99

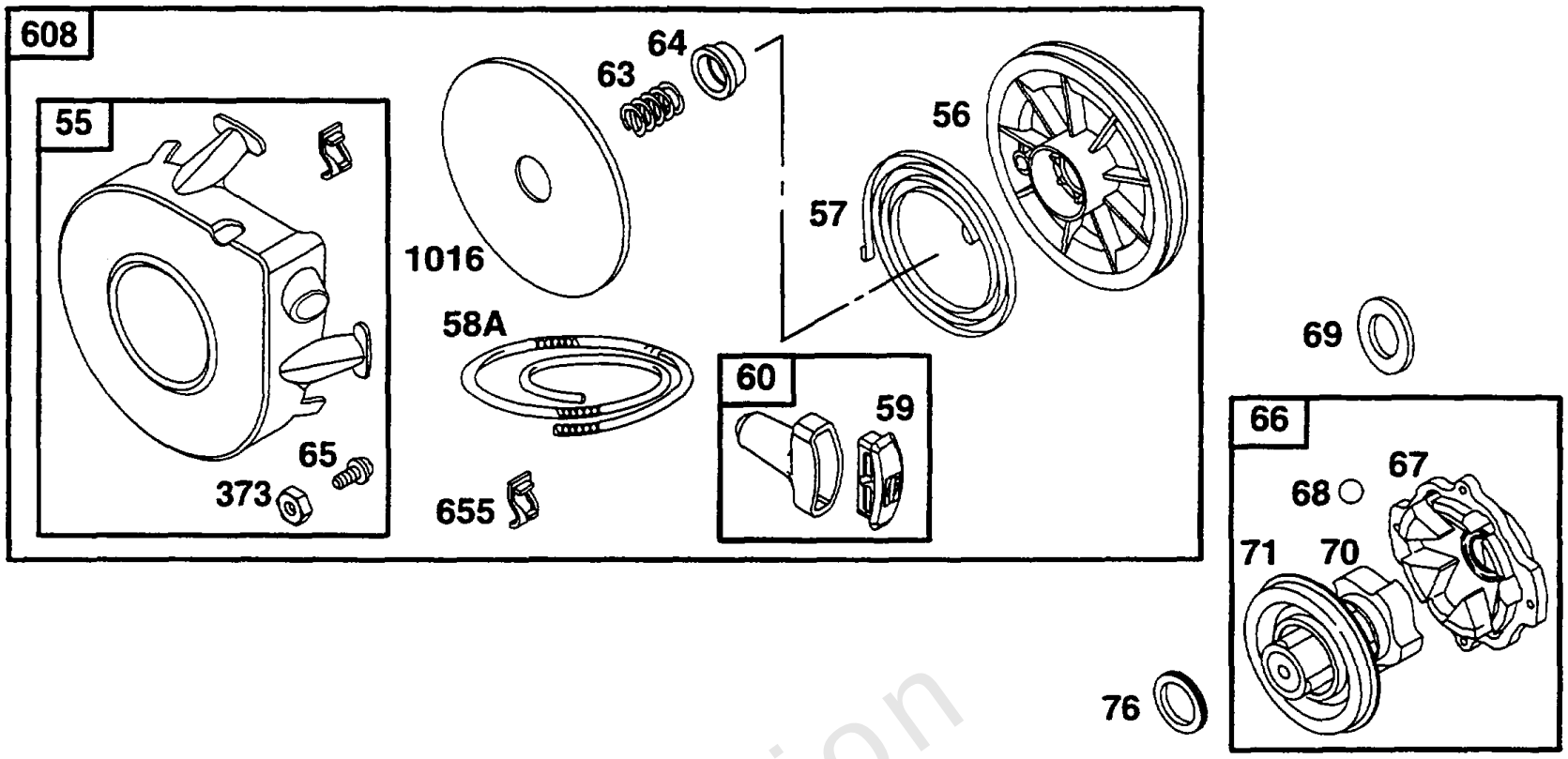

Not For Reproduction

Copyright © Briggs & Stratton. All Rights reserved

Rewind Starter

REF NO	PART NO	QTY	DESCRIPTION
55	393576		HOUSING, Rewind Starter
56	295871		PULLEY, Starter -(63 Rope)
57	490179		SPRING-REWIND STR
58A	66894		ROPE, Starter -(Cut To Required Length)
59	490653		INSERT, Grip
60	490652		GRIP-STARTER ROPE
64	281204		ADAPTER, Ratchet Spring
65	94904		SCREW -(Rewind Starter)
66	399671		CLUTCH-STARTER -(Uses Rubber Coated Retainer Washer-Ref. 71)
67	394897		HOUSING, Clutch
68	63770		BALL, Clutch
69	66718		WASHER -(1-1/16 O.D. X 17/32 I.D.) (1 1/16 O.D. X 17/32 I.D.)
70	298799		RATCHET, Clutch -(engine W/Ring Gear on FW equipped for Elec Start)
71	394506		COVER, Ratchet -(Rubber Coated)
76	68238		SEAL, Ratchet
373	94908		NUT -(Rewind Starter)
608	390391		STARTER, Rewind
655	222598		ANCHOR, Rewind Spring -(Stamped Rewind Housing)
1016	490817		SPACER-REWIND -(Rewind)

Not For Reproduction

Copyright © Briggs & Stratton. All Rights reserved