Parts Manual

Mfg. No: 243431-0755-99

Copyright © Briggs & Stratton. All Rights reserved

22-Jun-2026

Model Components

Page

Air Guide, Stopswitch, Cylinder Shield. 4
Alternator, Wire Assemblies. 6
Back Plate, Starter Clutch. 8
Blower Housing. 10
Carburetor Parts, Nozzle, High Speed Valve. 12
Carburetor, Choke & Throttle Shaft, Upper Body. 14
Crankcase Cover, Bearing Support. 16
Crankshaft. 18
Cylinder, Head, Breather. 20
Electric Starter. 22
Electric Starter 2. 24
Engine Base, Dipstick. 26
Engine Gasket Set, Carburetor Overhaul Kit. 28
Exhaust System. 30
Flywheel, Rotating Screen. 32
Fuel Filter, Fuel Pump, Fuel Line. 34
Fuel Tank, Brackets. 36
Gear Reduction, Gear Cover. 38
Governor Spring, Bell Crank, Control Levers. 40
Ignition Breaker, Magneto Armature. 42
Intake Manifold, Air Cleaner. 44
Piston, Connecting Rod, Bearing Support. 46
Regulator, V-Belt, Bracket. 48
Replacement Engine - US & Canada. 50
Rewind Starter. 51
Starter Panel Kits. 53
Valves, Camshaft. 55

Not For Reproduction

Copyright © Briggs & Stratton. All Rights reserved

Air Guide, Stopswitch, Cylinder Shield

Mfg. No: 243431-0755-99

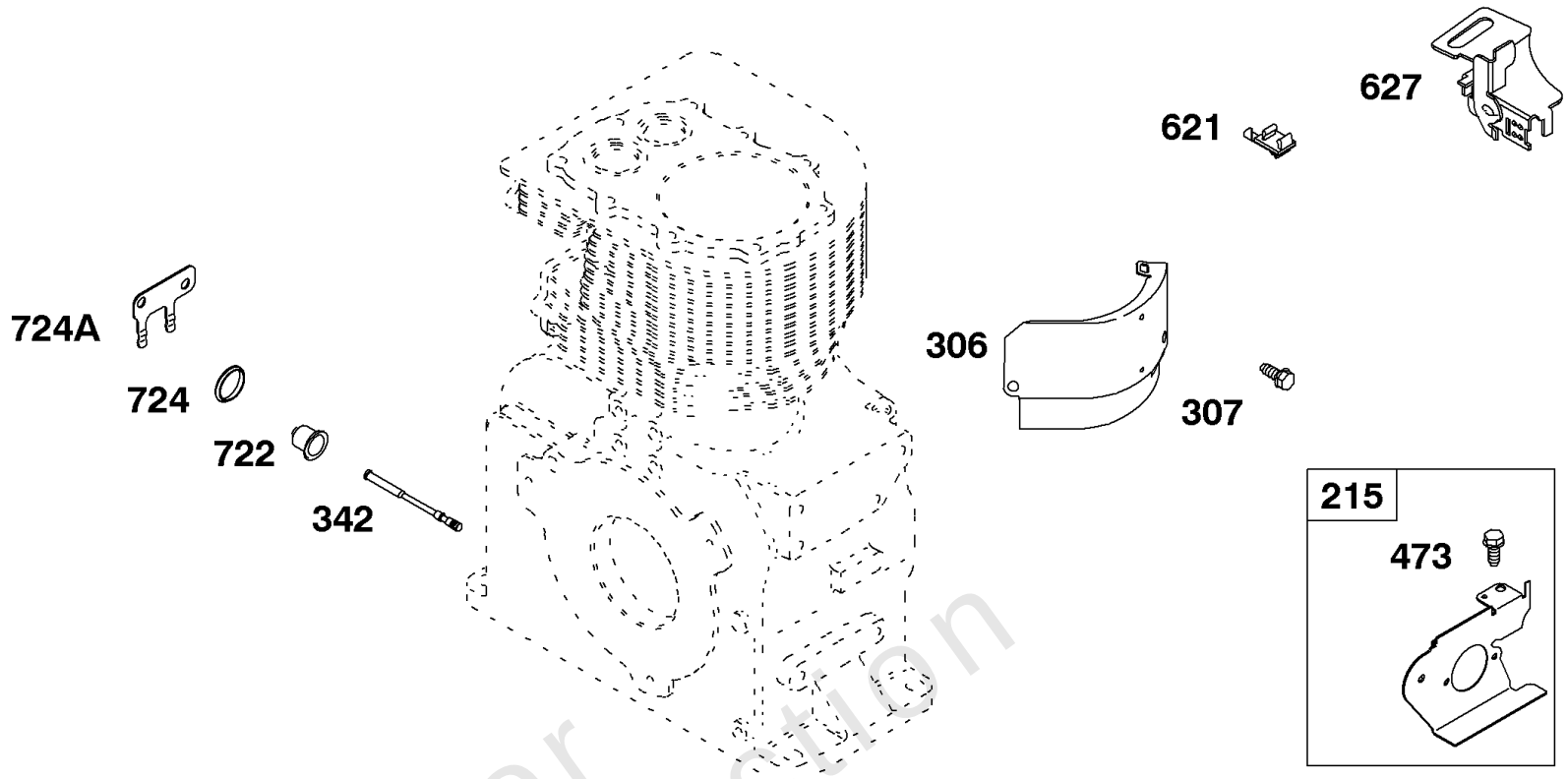

REF. NO.	PART NO.	DESCRIPTION
215	**291871**	Guide-Air
306	**690399**	Shield-Cylinder
307	**692198**	Screw (Cylinder Shield)
342	**298125S**	Plunger-Breaker
473	**692198**	Screw (Rod Guide)
621	**297472S**	Switch-Stop
627	**392884**	Bracket-Stopswitch
722	**68768**	Seal-Plunger
724	**93516**	Retainer-Seal
724A	**221873**	Retainer-Seal

Not For Reproduction

Copyright © Briggs & Stratton. All Rights reserved

Air Guide, Stopswitch, Cylinder Shield

REF NO	PART NO	QTY	DESCRIPTION
215	291871		GUIDE, Air
306	690399		SHIELD, Cylinder
307	692198		SCREW -(Cylinder Shield)
342	298125S		PLUNGER, Breaker
473	692198		SCREW -(Rod Guide)
621	297472S		SWITCH, Stop
627	392884		BRACKET, Stopswitch
722	68768		SEAL, Plunger
724	93516		RETAINER, Seal
724A	221873		RETAINER, Seal

Not For Reproduction

Copyright © Briggs & Stratton. All Rights reserved

Mfg. No: 243431-0755-99

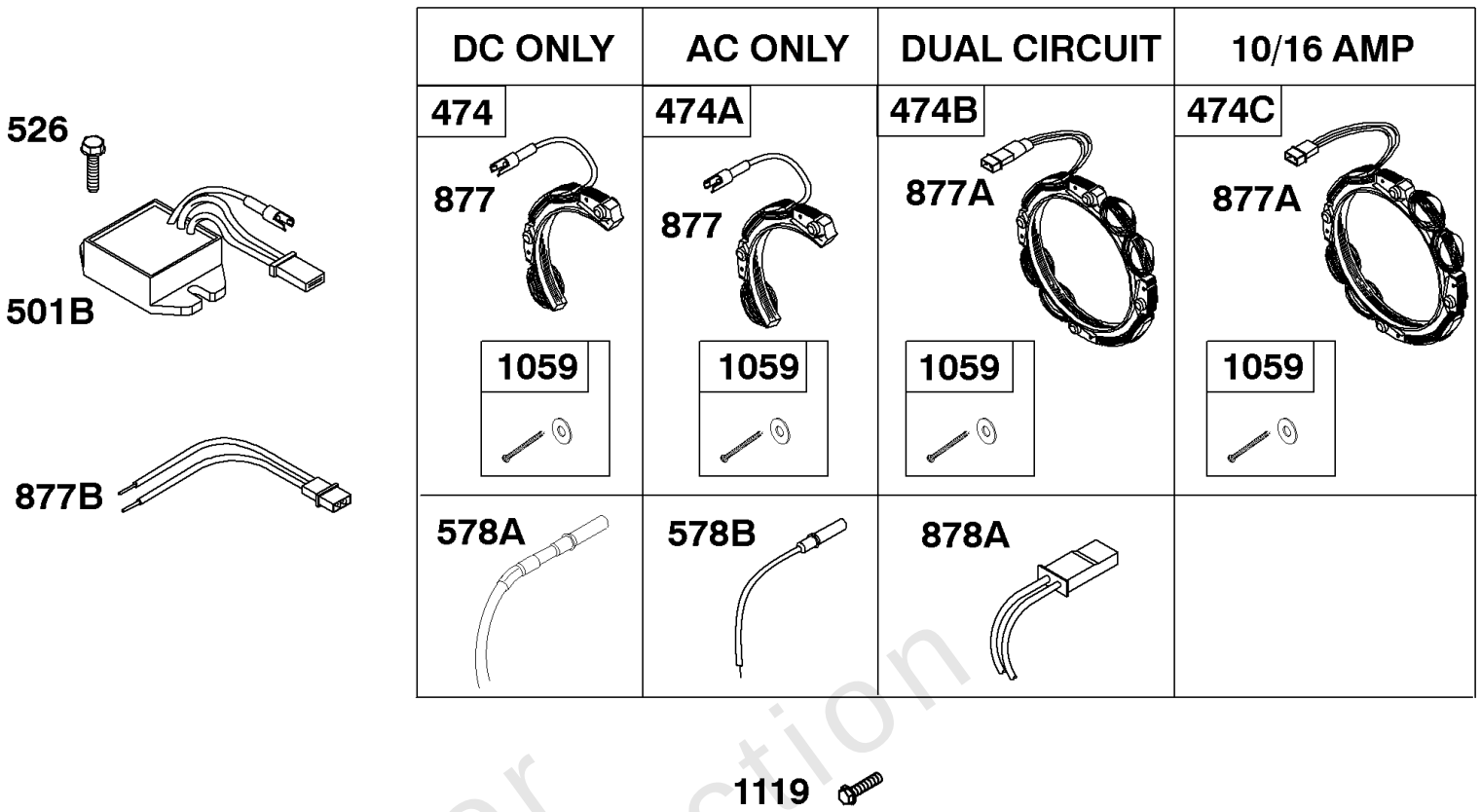

Not For Reproduction

REF. NO.	PART NO.	DESCRIPTION
474	**696578**	Alternator (DC Only)
474A	**391595**	Alternator (AC Only)
474B	**696459**	Alternator (Dual Circuit)
474C	**696458**	Alternator (10/16 Amp)
501B	**691185**	Regulator
526	**690297**	Screw (Regulator)
578A	**692306**	Wire Assembly
578B	**390867**	Wire Assembly
877	**393814**	Wire/Connector-Alternator (DC Only)
877A	**393456**	Wire/Connector-Alternator (Dual Circuit)
877B	**399916**	Wire/Connector-Alternator (Tri-Circuit)
878A	**398661**	Harness-Alternator
1059	**698516**	Kit-Screw/Washer (Alternator)
1119	**691183**	Screw (Alternator)

Copyright © Briggs & Stratton. All Rights reserved

Alternator, Wire Assemblies

REF NO	PART NO	QTY	DESCRIPTION
474	696578		ALTERNATOR -(DC Only)
474A	391595		ALTERNATOR -(AC Only)
474B	696459		ALTERNATOR -(Dual Circuit)
474C	696458		ALTERNATOR -(10/16 AMP)
501B	691185		REGULATOR -(16 Amp Regulated)
526	690297		SCREW -(Regulator)
578A	692306		WIRE ASSEMBLY
578B	390867		HARNESS, Alternator -(Ac Only)
877	393814		WIRE/CONNECTOR, Alternator -(DC Only)
877A	393456		WIRE/CONNECTOR, Alternator -(Dual Circuit)
877B	399916		WIRE/CONN-ALTERNATOR -(Tri Circuit)
878A	398661		HARNESS, Wiring
1059	698516		KIT, Screw/Washer -(Alternator)
1119	691183		SCREW -(Alternator)

Not For Reproduction

Copyright © Briggs & Stratton. All Rights reserved

Back Plate, Starter Clutch

Mfg. No: 243431-0755-99

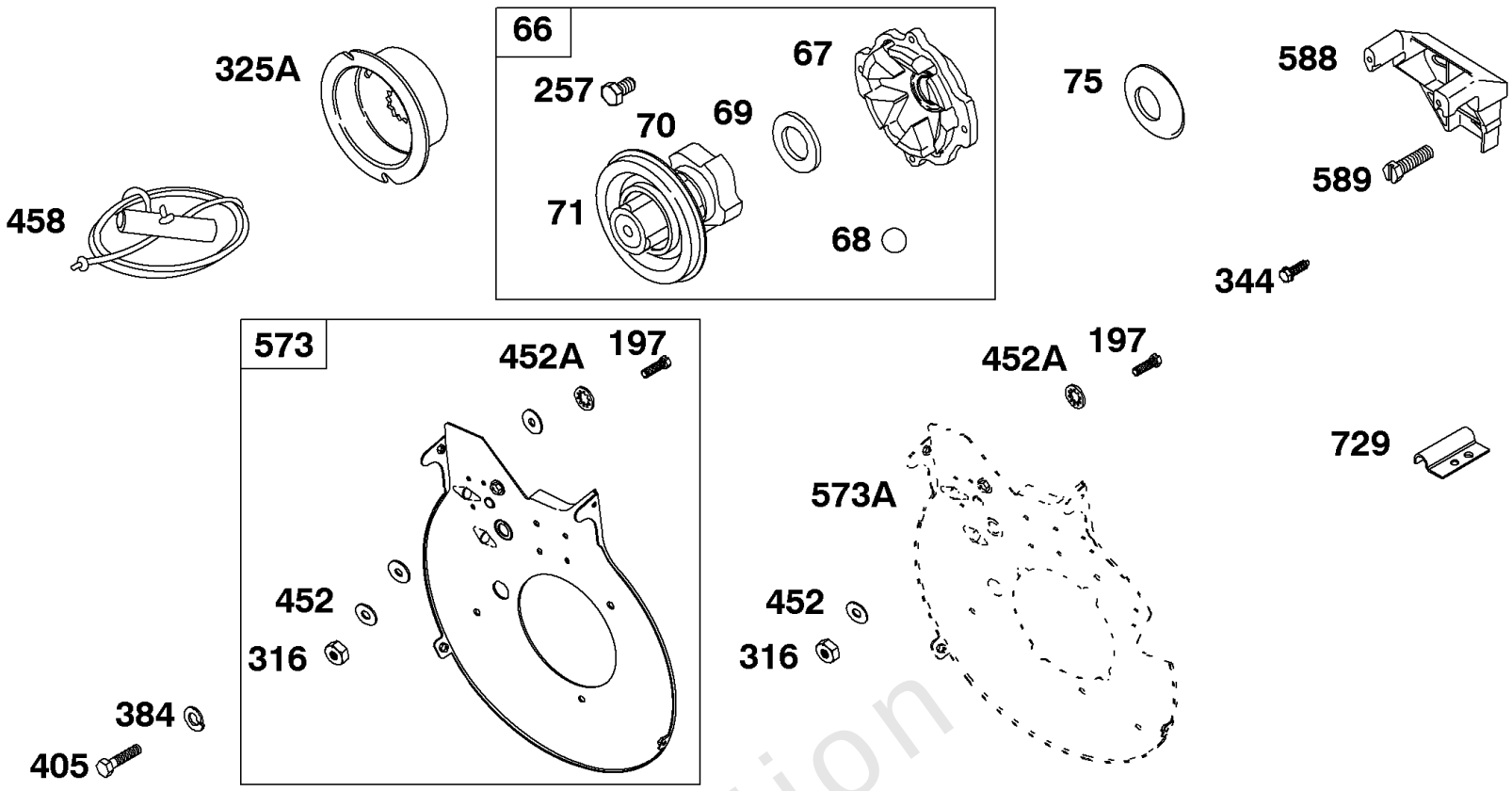

REF. NO.	PART NO.	DESCRIPTION
66	**399671**	Clutch-Starter **------- Note -----** **393127S** Clutch-Starter Used on Type No(s). 0561, 0624, 0733, 0734, 0735, 0736, 0737, 0738, 0739, 0744, 0746, 0749, 0754, 0757, 0761, 0762, 0766, 0768, 0770, 0797, 0801, 1131, 1136, 1139, 1141, 1145, 1146, 1151, 1154, 1156, 1159, 1160, 1164, 2541, 2561.
67	**394897**	Housing-Clutch **------- Note -----** **690542** Housing-Clutch Used on Type No(s). 0561, 0624, 0733, 0734, 0735, 0736, 0737, 0738, 0739, 0744, 0746, 0749, 0754, 0757, 0761, 0762, 0766, 0768, 0770, 0797, 0801, 1131, 1136, 1139, 1141, 1145, 1146, 1151, 1154, 1156, 1159, 1160, 1164, 2541, 2561.
68	**691604**	Ball-Clutch
69	**690271**	Washer (Starter Clutch)
70	**691945**	Ratchet-Clutch
71	**691359**	Cover-Ratchet
75	**691056**	Washer (Flywheel)
197	**90072**	Screw (Back Plate)
257	**691078**	Screw (Starter Clutch)
316	**691612**	Nut (Back Plate)
325A	**690261**	Pulley-Rope Starter
344	**93410**	Screw (Cable Clamp)
384	**90832**	Washer (Back Plate)
405	**690290**	Screw (Back Plate)
452A	**26404**	Washer (Back Plate)
452B	**92864**	Washer (Back Plate)
458	**69932**	Kit-Handle/Rope (55 1/2" Rope)
573	**298159**	Plate-Back
573A		Plate-Back (Used on Engines With Electric Start Only) **(NO LONGER AVAILABLE)**
588	**690375**	Bracket-Armature
589	**690300**	Screw (Armature Bracket)
729	**690432**	Clip-Wire

Not For Reproduction

Copyright © Briggs & Stratton. All Rights reserved

Back Plate, Starter Clutch

REF NO	PART NO	QTY	DESCRIPTION
66	399671		CLUTCH-STARTER
67	394897		HOUSING, Clutch
68	691604		BALL, Clutch
69	690271		WASHER -(Starter Clutch)
70	691945		RATCHET-CLUTCH
71	691359		COVER, Ratchet
75	691056		WASHER -(Flywheel)
197	90072		SCREW -(Back Plate)
257	691078		SCREW -(Starter Clutch)
316	691612		NUT -(Back Plate)
325A	690261		PULLEY, Rope Starter
344	93410		SCREW -(Cable Clamp)
384	690371		WASHER -(Back Plate)
405	690290		SCREW -(Back Plate)
452	26404		WASHER -(Back Plate)
452A	92864		WASHER -(Back Plate)
458	69932S		KIT, Handle/Rope -(55-1/2 Rope)
573	298159		PLATE, Back
573A	-----		Plate-Back -(NO LONGER AVAILABLE)
588	690375		BRACKET, Armature
589	690300		SCREW -(Armature Bracket)
729	690432		CLIP, Wire

Not For Reproduction

Copyright © Briggs & Stratton. All Rights reserved

Blower Housing

Mfg. No: 243431-0755-99

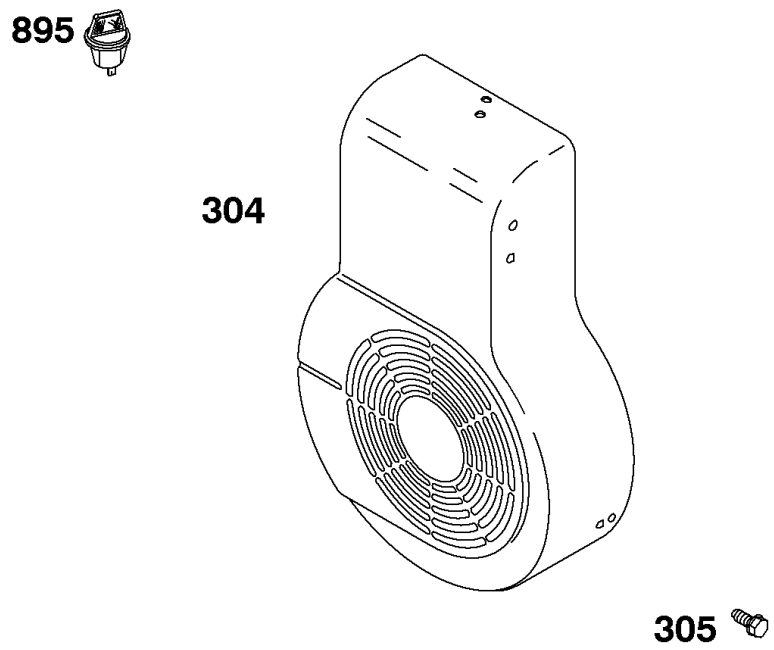

REF. NO.	PART NO.	DESCRIPTION	REF. NO.	PART NO.	DESCRIPTION	REF. NO.	PART NO.	DESCRIPTION
304	**291407**	Housing-Blower **------- Note -----** **294698** Housing-Blower Used on Type No(s). 0118, 0121, 0123, 0124, 0140, 0147, 0148, 0149, 0159, 0176, 0178, 0184, 0186, 0189, 0192, 0193, 0200, 0618, 0626, 0627, 0630, 0639, 0642, 0648, 0649, 0655, 0665, 0692, 0700, 0709, 0773, 0800, 1150, 1162, 1163, 2580. **297010** Housing-Blower (Rewind Starter) Used on Type No(s). 0560, 0619, 0622, 0661, 0666, 0677, 0678, 0685, 0688, 0690, 0693, 0699, 0704, 0715, 0718, 0720.			**297453** Housing-Blower Used on Type No(s). 0023, 0129, 0132, 0135, 0137, 0146, 0160, 0163, 0164, 0183, 0194, 0199, 0523, 0527, 0632, 0637, 0640, 0652, 0653, 0656, 0662, 0670, 0676, 0680, 0682, 0683, 0695, 0703, 0712, 0716, 0722, 0750, 0760. **297766** Housing-Blower Used on Type No(s). 0020, 0195, 0197, 0524, 0644, 0651, 0657, 0673, 0684, 0689, 0696, 0707, 0764, 2524.			**391229** Housing-Blower (Electric Start) Used on Type No(s). 0528, 0614, 0621, 0772, 0774, 0775, 0783, 1147, 1148, 1153, 1155, 1167, 2528, 2529, 2530, 2550. **392343** Housing-Blower Used on Type No(s). 0561, 0624, 0733, 0734, 0735, 0736, 0737, 0738, 0739, 0740, 0744, 0746, 0749, 0754, 0757, 0761, 0762, 0766, 0768, 0770, 0777, 0780, 0786, 0791, 0794, 0801, 1131, 1136, 1139, 1141, 1145, 1146, 1151, 1154, 1156, 1159, 1160, 1164, 2541, 2561.
						305	**692198**	Screw (Blower-Housing)
						895	**692309**	Switch-Rotary

Not For Reproduction

Copyright © Briggs & Stratton. All Rights reserved

Blower Housing

REF NO	PART NO	QTY	DESCRIPTION
304	291407		HOUSING, Blower
305	692198		SCREW -(Blower Housing)
895	692309		SWITCH, Rotary

Not For Reproduction

Carburetor Parts, Nozzle, High Speed Valve

Mfg. No: 243431-0755-99

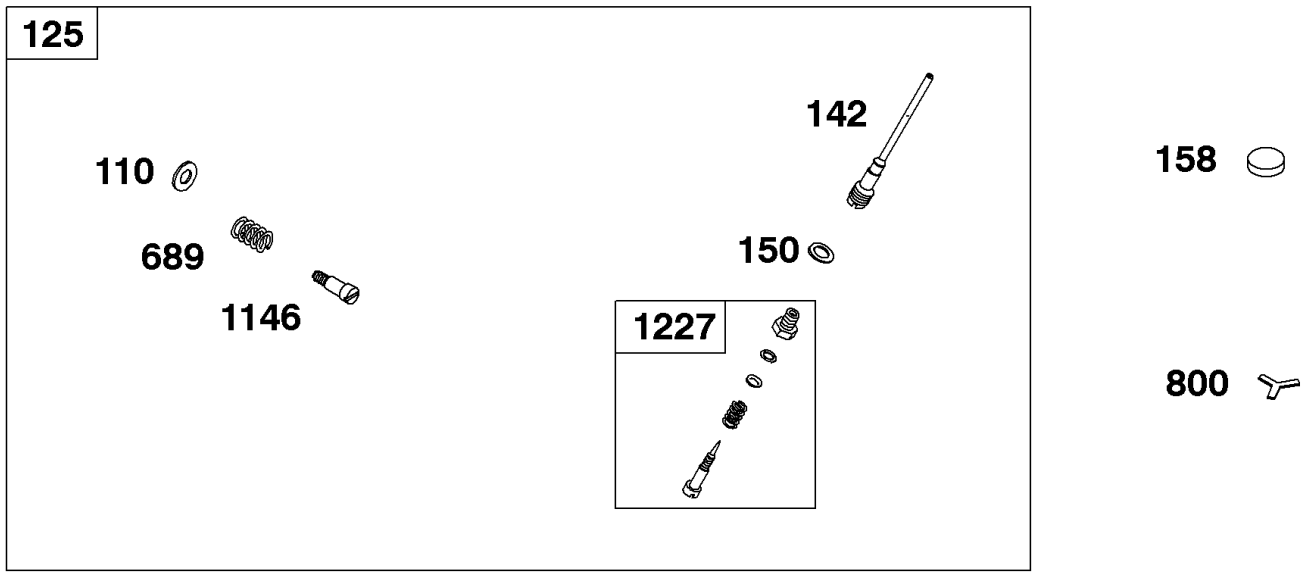

REF. NO.	PART NO.	DESCRIPTION
110	**691186**	Washer (Choke Shaft)
125		Carburetor (See Previous Page)
142	**691966**	Nozzle-Carburetor (Standard) (Labeled B) (Used After Code Date 81101100). **------- Note -----** **390950** Nozzle-Carburetor (Standard) (Labeled B) (#40 Jet) (Used Before Code Date 81101200).
150	**691610**	Gasket-Nozzle
158	**27590**	Plug-Carburetor Filter/Drain
689	**691590**	Spring-Friction
800	**220521**	Retainer-Carburetor Drain
1146	**691587**	Screw (Choke Shaft)
1227	**99525S**	Valve-High Speed

Not For Reproduction

Copyright © Briggs & Stratton. All Rights reserved

Carburetor Parts, Nozzle, High Speed Valve

REF NO	PART NO	QTY	DESCRIPTION
110	691186		WASHER -(Choke Shaft)
125	391073		CARBURETOR
142	390950		NOZZLE, Carburetor -(Standard) (Labeled B)(#40 Jet) -Used Before Code Date 81101200
142	691966		NOZZLE, Carburetor -(Standard) (Labeled B) -Used After Code Date 81101100
150	691610		GASKET, Nozzle
158	27590		PLUG, Carburetor Filter/Drain
689	691590		SPRING, Friction
800	220521		RETAINER, Carburetor Drain
1146	691587		SCREW -(Choke Shaft)
1227	99525S		VALVE, High Speed

Not For Reproduction

Copyright © Briggs & Stratton. All Rights reserved

Carburetor, Choke & Throttle Shaft, Upper Body

Mfg. No: 243431-0755-99

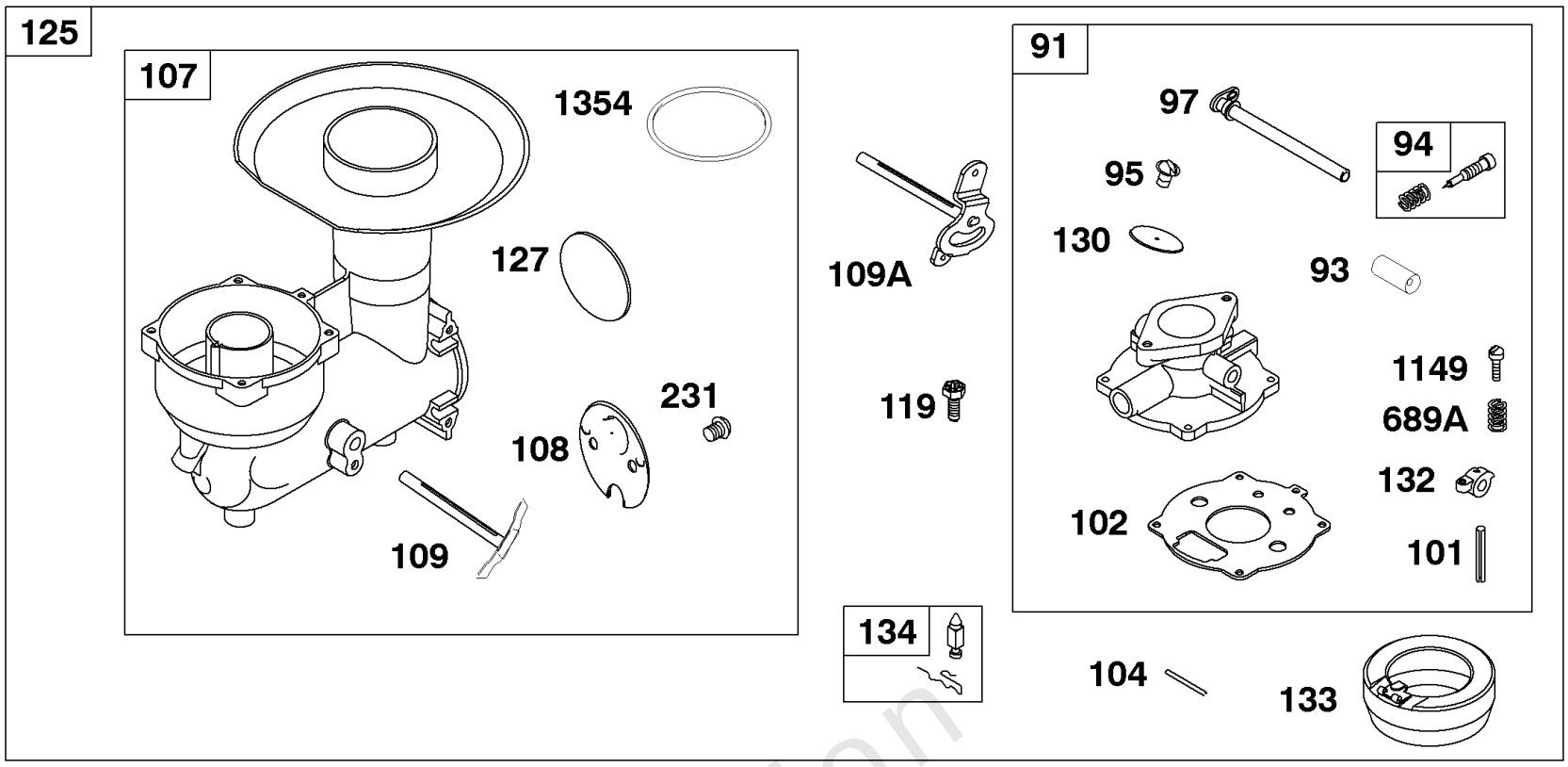

REF. NO.	PART NO.	DESCRIPTION
91	**391034**	Body-Upper Carburetor **------- Note -----** **299098** Body-Upper Carburetor Used on Type No(s). 0010, 0131, 0137, 0150, 0152, 0165, 0201, 0510.
93	**691769**	Bushing-Throttle Shaft
94	**292681**	Kit-Idle Mixture
95	**691437**	Screw (Throttle Valve)
97	**691944**	Shaft-Throttle
101	**691616**	Pin-Shaft
102	**692215**	Gasket-Carburetor Body
104	**691775**	Pin-Float Hinge
107	**391069**	Body-Lower Carburetor
108	**690621**	Valve-Choke **------- Note -----** **298730** Valve-Choke Used on Type No(s). 0131, 0137, 0150, 0152, 0165.
109	**691353**	Shaft-Choke
109A	**690617**	Shaft-Choke Used on Type No(s). 0123, 0124, 0132, 0133, 0147, 0148, 0149, 0156, 0169, 0176, 0178, 0191, 0192, 0193, 0196, 0626, 0627, 0630, 0639, 0648, 0649, 0651, 0652, 0653, 0656, 0665, 0667, 0718, 0722, 0735, 2580.
119	**691090**	Screw (Upper Body to Lower Carburetor Body)
125	**391073**	Carburetor **------- Note -----** **391074** Carburetor Used on Type No(s). 0123, 0124, 0132, 0133, 0147, 0148, 0149, 0156, 0169, 0176, 0178, 0191, 0192, 0193, 0196, 0626, 0627, 0630, 0639, 0648, 0649, 0651, 0652, 0653, 0656, 0665, 0667, 0718, 0722, 0735, 1133, 1136, 1137, 1164, 1166, 1167, 1170, 1172, 2520, 2524, 2528, 2529, 2540, 2561, 2580. **392182** Carburetor Used on Type No(s). 0709.
127	**690627**	Plug-Welch
130	**691727**	Valve-Throttle
132	**691708**	Stop-Throttle
133	**692265**	Float-Carburetor
134	**394681**	Kit-Needle/Seat **------- Note -----** **394682** Kit-Needle/Seat (Includes Brass Seat) **394683** Kit-Needle/Seat (Includes Brass Seat) (Use With Impulse Pump)
231	**691437**	Screw (Choke Valve)
689A	**691591**	Spring-Friction
1149	**691615**	Screw (Throttle Shaft)
1354	**691929**	Seal-O Ring (Lower Carburetor Body)

Not For Reproduction

Copyright © Briggs & Stratton. All Rights reserved

Carburetor, Choke & Throttle Shaft, Upper Body

REF NO	PART NO	QTY	DESCRIPTION
91	391034		BODY, Upper Carburetor
93	691769		BUSHING, Throttle Shaft
94	292681		VALVE, Idle Mixture
95	691437		SCREW -(Throttle Valve)
97	691944		SHAFT, Throttle
101	691616		PIN, Shaft
102	692215		GASKET, Carburetor Body
104	691775		PIN, Float Hinge
107	391069		BODY, Lower Carburetor
108	690621		VALVE, Choke
109	691353		SHAFT, Choke
119	691090		SCREW -(Upper To Lower Carburetor Body)
125	391073		CARBURETOR
127	690627		PLUG, Welch
130	691727		VALVE, Throttle
132	691708		STOP, Throttle
133	692265		FLOAT, Carburetor
134	394681		KIT, Needle/Seat -(Gravity Feed)
134	394682		KIT, Needle/Seat -(Includes Brass Seat)
134	394683		KIT, Needle/Seat -(Includes Brass Seat)(Use With Impulse Pump)
231	691437		SCREW -(Choke Valve)
689A	691591		SPRING, Friction
1149	691615		SCREW -(Throttle Shaft)
1354	691929		SEAL, O-Ring -(Lower Carburetor Body)

Not For Reproduction

Copyright © Briggs & Stratton. All Rights reserved

Crankcase Cover, Bearing Support

Mfg. No: 243431-0755-99

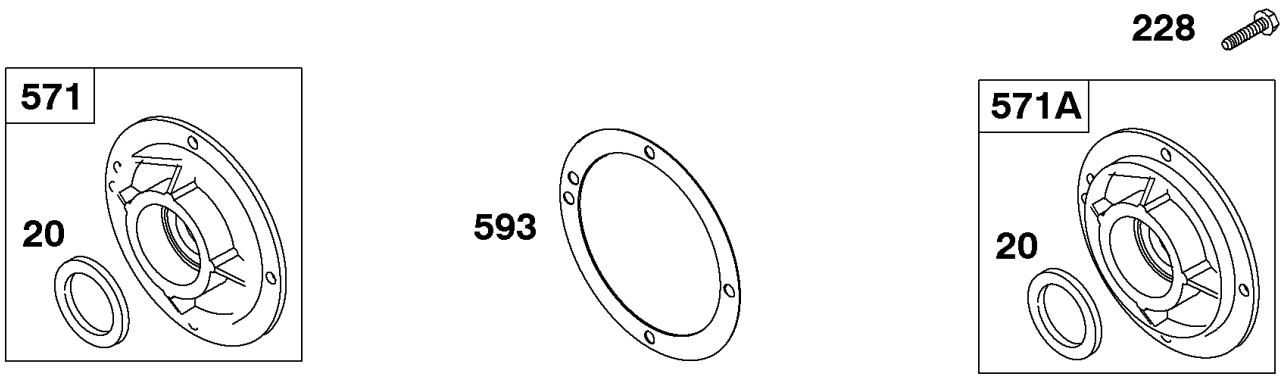

REF. NO.	PART NO.	DESCRIPTION
20	**291675S**	Seal-Oil (PTO Side) Used on Type No(s). 1111, 1130, 1133, 1135, 1136, 1137, 1164, 1170, 1172, 1174, 2520, 2524, 2528, 2529, 2531, 2561, 2581. **------- Note -----** **299539** Seal-Oil (PTO Side) Used on Type No(s). 1131, 1132, 1142, 1145, 1146, 1149, 1154, 1155, 1160, 1166, 1167, 1168, 1172, 1173, 1174, 2522, 2530. **691948** Seal-Oil (PTO Side) Used on Type No(s). 0626, 0627, 0630, 0665, 0709, 2580.
228	**691681**	Screw (Bearing Support)
571	**291710**	Cover-Crankcase Used on Type No(s). 0024, 0124, 0139, 0149, 0166, 0170, 0200, 0524, 0529, 0655, 0671, 0684, 0712, 0724, 0759, 0772, 0784, 1111, 1130, 1133, 1134, 1135, 1136, 1137, 1138, 1139, 1140, 1141, 1143, 1144, 1147, 1148, 1150, 1151, 1152, 1153, 1156, 1157, 1158, 1159, 1161, 1162, 1163, 1164, 1169, 1170, 1172, 1173, 1174, 2520, 2524, 2528, 2529, 2531, 2561, 2581.
571A	**291665**	Support-Bearing **------- Note -----** **390054** Support-Bearing Used on Type No(s). 0022, 0143, 0167, 0172, 0177, 0194, 0635, 0647, 0688, 0700, 0705, 0733, 0746, 0754, 0755, 0757, 0766, 0775, 0777, 0778, 0781, 0791, 0792, 1131, 1132, 1142, 1145, 1146, 1149, 1154, 1155, 1160, 1166, 1167, 1168, 2522, 2530. **390114** Support-Bearing Used on Type No(s). 0173, 0174, 0185, 0190, 0198, 0525, 0527, 0530, 0615, 0622, 0631, 0636, 0641, 0659, 0664, 0669, 0670, 0674, 0676, 0677, 0678, 0686, 0687, 0689, 0697, 0699, 0704, 0707, 0715, 0716, 0717, 0718, 0720, 0721, 0729, 0732, 0734, 0735, 0739, 0743, 0748, 0761, 0763, 0765, 0769, 0770, 0771, 0776, 0779, 0782, 0785, 0793, 0794, 0795, 0796, 0801, 1131, 1132, 1142, 1145, 1146, 1149, 1154, 1155, 1160, 1166, 1167, 1168, 2522, 2530. **391062** Support-Bearing Used on Type No(s). 0626, 0627, 0630, 0665, 0709, 2580.
593	**691311**	Gasket-Bearing Support (.015" Thick)

Not For Reproduction

Copyright © Briggs & Stratton. All Rights reserved

Crankcase Cover, Bearing Support

REF NO	PART NO	QTY	DESCRIPTION
228	691681		SCREW -(Bearing Support)
571A	390054		SUPPORT, Bearing
593	691311		GASKET, Crankcase Cover -(.015)

Not For Reproduction

Copyright © Briggs & Stratton. All Rights reserved

Mfg. No: 243431-0755-99

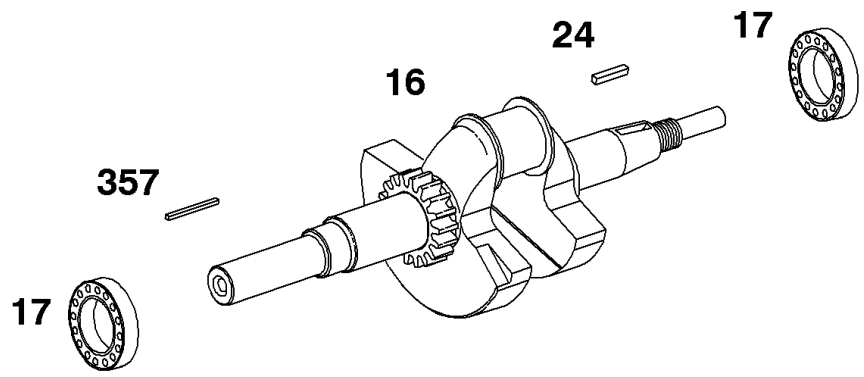

REF. NO.	PART NO.	DESCRIPTION
16	**690530**	Crankshaft **------- Note -----** **260887** Crankshaft Used on Type No(s). 0022, 0143, 0167, 0172, 0173, 0174, 0177, 0185, 0190, 0194, 0198, 0522, 0615, 0631, 0635, 0636, 0641, 0647, 0659, 0664, 0669, 0670, 0686, 0697, 0705, 0717, 0721, 0732, 0743, 0748, 0755, 0763, 0765, 0769, 0771, 0776, 0779, 0781, 0785, 0793, 0796, 1132, 1142, 1149, 1166, 1167, 1168, 2522, 2530. **690532** Crankshaft Used on Type No(s). 0626, 0627, 0630, 0665, 0709, 2580. **261240** Crankshaft Used on Type No(s). 0525, 0527, 0674, 0676, 0687, 0689, 0707, 0716, 0729, 0775, 0778, 0782, 0792, 1154, 1155. **690539** Crankshaft Used on Type No(s). 0561, 0624, 0736, 0737, 0738, 0744, 0749, 0762, 0768, 0780, 0786, 0797, 1136, 1139, 1141, 1151, 1156, 1159, 1164, 2561. **261295** Crankshaft Used on Type No(s). 0560, 0619, 0660, 0661, 0666, 0675, 0685, 0693, 0702. **261421** Crankshaft Used on Type No(s). 0733, 0734, 0735, 0739, 0754, 0757, 0761, 0770, 0794, 0801, 1131, 1145, 1146, 1160. **261493** Crankshaft Used on Type No(s). 0746, 0766, 0777, 0791, 1154. **261549** Crankshaft (Used After Code Date 77072400). Used on Type No(s). 1117, 1134, 1152, 1170, 1172, 2524, 2529. **260885** Crankshaft (Used Before Code Date 77072500). Used on Type No(s). 0021, 0024, 0112, 0116, 0139, 0165, 0166, 0186, 0524, 0529, 0612, 0616, 0644, 0671, 0706, 0724, 0727, 0759, 0772, 0784, 0798, 1170, 1172, 2524, 2529. Crankshaft **(NO LONGER AVAILABLE)** Used on Type No(s). 1116, 2540, 2550. **262021** Crankshaft Used on Type No(s). 2541.
17	**691938**	Bearing-Ball
24	**222698S**	Key-Flywheel
357	**691483**	Key-Drive Pulley

Not for Reproduction

Copyright © Briggs & Stratton. All Rights reserved

Crankshaft

REF NO	PART NO	QTY	DESCRIPTION
16	260887		CRANKSHAFT
17	691938		BEARING, Ball
24	222698S		KEY, Flywheel
357	691483		KEY, Drive Pulley

Not For Reproduction

Copyright © Briggs & Stratton. All Rights reserved

Mfg. No: 243431-0755-99

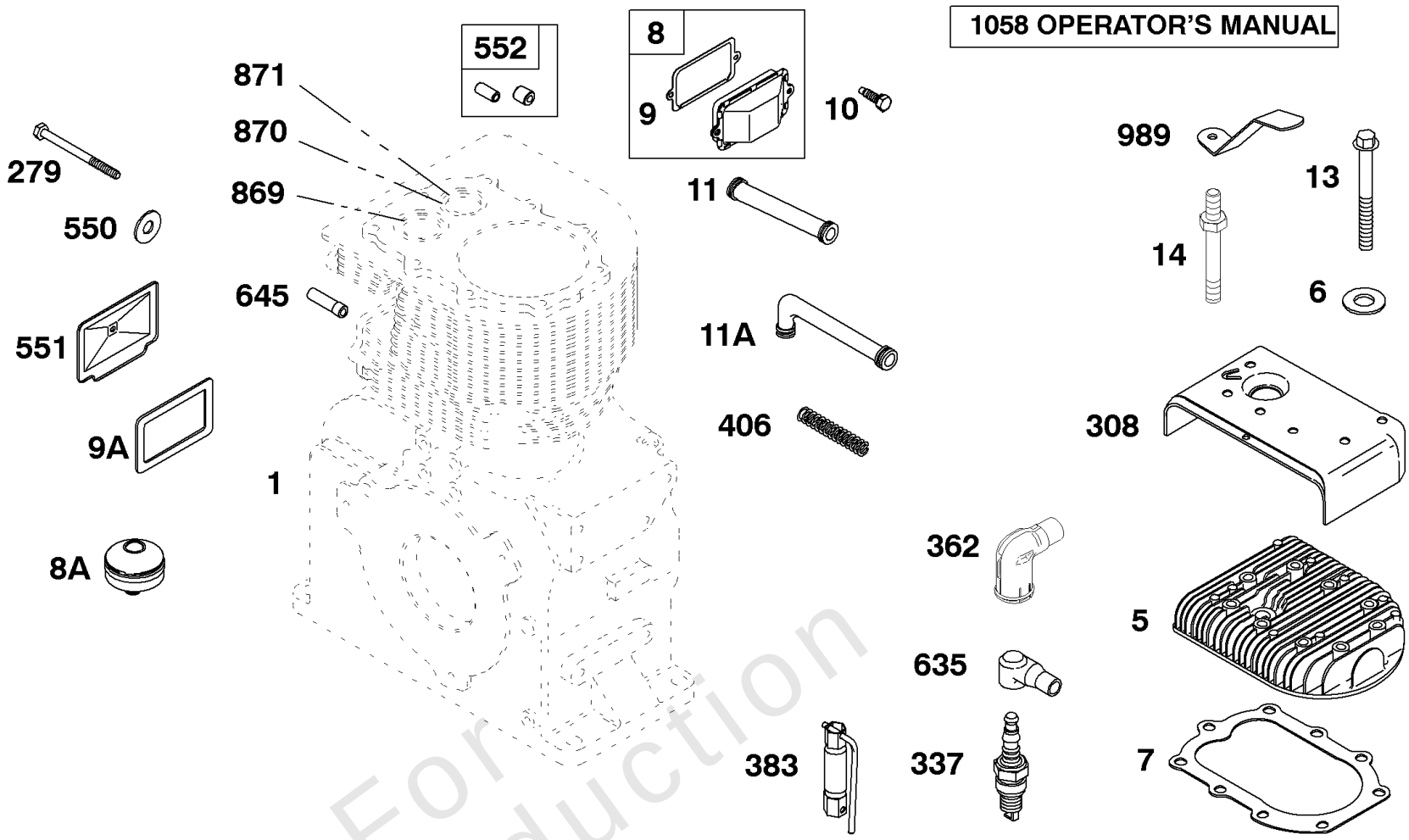

Not For Reproduction

REF. NO.	PART NO.	DESCRIPTION
1		Cylinder Assembly **(NO LONGER AVAILABLE)**
5	**691150**	Head-Cylinder
6	**691261**	Washer (Cylinder Head)
7	**692230**	Gasket-Cylinder Head
8	**495738**	Breather Assembly
8A	**297704**	Breather Assembly
9	**27803S**	Gasket-Breather
9A	**66214**	Gasket-Breather
10	**691666**	Screw (Breather Assembly)
11	**691512**	Tube-Breather
11A	**67068**	Tube-Breather
13	**691441**	Screw (Cylinder Head)
14	**691690**	Stud (Cylinder Head) Used on Type No(s). 0661, 0743, 0763, 0801, 1111, 1116, 1130, 1131, 1133, 1136, 1137, 1160, 1163, 1164, 1166, 1167, 1170, 1172, 2520, 2524, 2528, 2529, 2540, 2550, 2561.
279	**690294**	Screw (Valve Cover)
308	**690609**	Cover-Cylinder Head
337	**802592S**	Plug-Spark
362	**691954**	Shield-Spark Plug
383	**89838S**	Wrench-Spark Plug
406	**690533**	Spring-Breather Tube
550	**22353**	Washer (Valve Cover)
551	**22795**	Cover-Valve
552	**393666**	Bushing-Governor Crank
635	**66538S**	Boot-Spark Plug
645	**692880**	Bushing-Plunger
869	**21880**	Seat-Valve (Intake)
870	**691583**	Seat-Valve (Exhaust)
871	**231218**	Bushing-Valve Guide
989	**690578**	Stop Switch-Spark Plug **------- Note -----** **298926** Stop Switch-Spark Plug (With Switch Point) Used on Type No(s). 0657, 0660, 0708, 0710, 0725, 0726, 0728, 0743, 0757, 1145, 2530, 2541, 2550.
1058	**270373**	Operator's Manual (Non Emission Engines)

Copyright © Briggs & Stratton. All Rights reserved

Cylinder, Head, Breather

REF NO	PART NO	QTY	DESCRIPTION
1	-----		Cylinder Assembly -(NO LONGER AVAILABLE)
5	691150		HEAD, Cylinder
6	691261		WASHER -(Cylinder Head)
7	692230		GASKET, Cylinder Head
8	495738		BREATHER ASSEMBLY
8A	297704		BREATHER ASSEMBLY
9	27803S		GASKET, Breather
9A	66214		GASKET, Rocker Cover
10	691666		SCREW -(Breather Assembly)
11	691512		TUBE, Breather
11A	67068		TUBE, Breather
13	691441		SCREW -(Cylinder Head)
279	690294		SCREW -(Valve Cover)
308	690609		COVER, Cylinder Head
337	802592S		PLUG, Spark -(Resistor)
362	691954		SHIELD, Spark Plug
383	89838S		WRENCH, Spark Plug
406	690533		SPRING, Breather Tube
550	22353		WASHER -(Valve Cover)
551	22795		COVER, Valve
552	393666		BUSHING, Governor Crank
635	66538S		BOOT, Spark PLug
645	692880		BUSHING, Plunger
869	21880		SEAT, Valve -(Intake)
870	691583		SEAT, Valve -(Exhaust)
871	231218		BUSHING, Valve Guide -(Exhaust)
989	690578		SWITCH, Spark Plug Stop
1058	270373		MANUAL, Operator's -(Non Emission)

Not For Reproduction

Mfg. No: 243431-0755-99

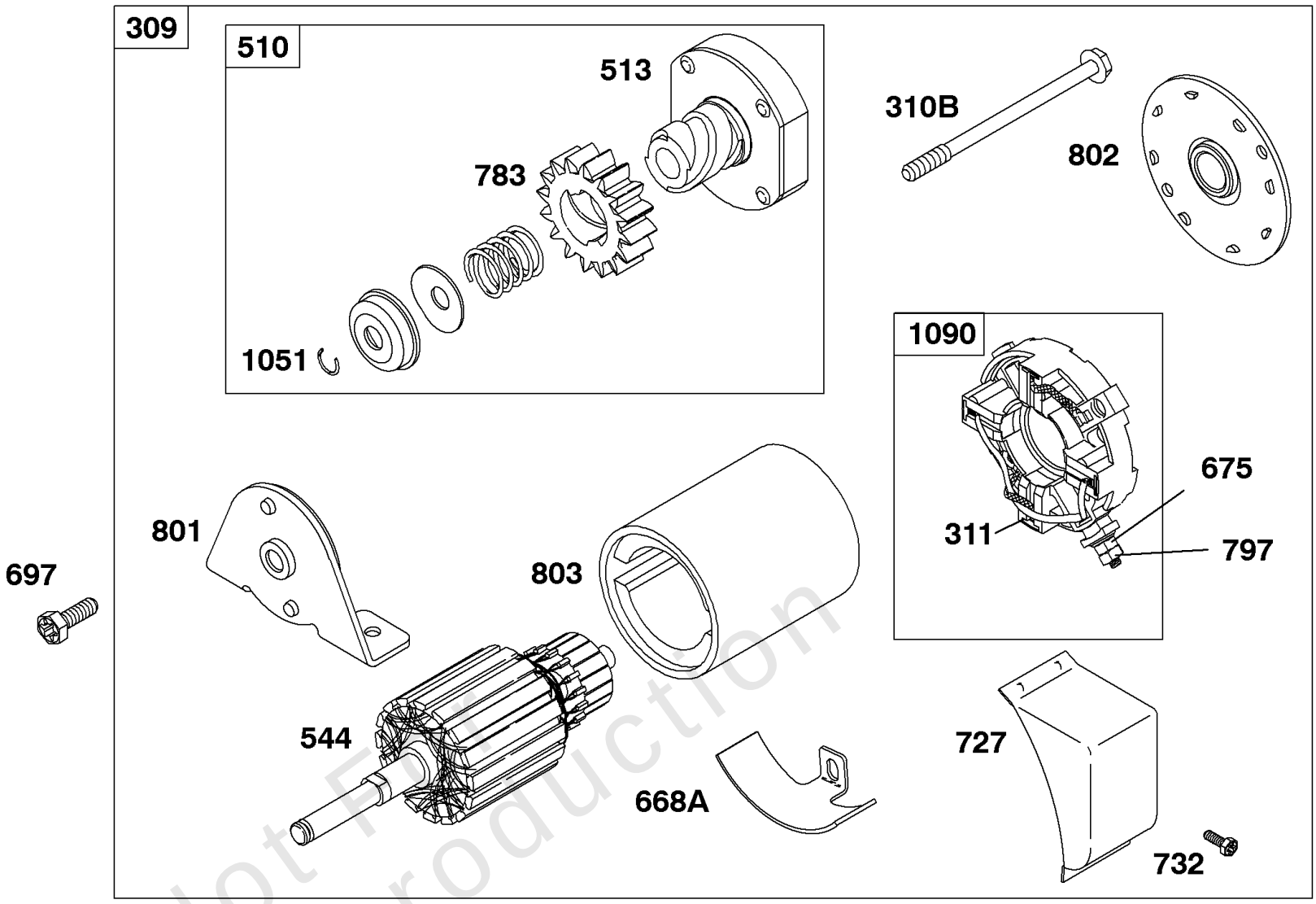

REF. NO.	PART NO.	DESCRIPTION
309	**396306**	Motor-Starter (4 3/8" Housing Length)
310B	**691263**	Bolt (Starter Motor)
311	**497608**	Brush Set
510	**696541**	Drive-Starter
513	**692024**	Clutch-Drive
544		Armature-Starter (Serviced By **396306** Starter Motor Only)
668A	**396515**	Spacer (Starter Motor)
675	**691261**	Washer (Brush Retainer)
697	**691058**	Screw (Drive Cap)
727	**692338**	Cover-Starter Drive
732	**93410**	Screw (Starter Drive Cover)
783	**695708**	Gear-Pinion
797	**691029**	Nut (Brush Retainer)
801	**394802**	Cap-Drive (4 3/8" Housing Length)
802	**691286**	Cap-End
803		Housing-Starter (Serviced With **396306** Starter Motor Only)
1051	**691265**	Ring-Retaining
1090	**691293**	Retainer-Brush

Not For Reproduction

Copyright © Briggs & Stratton. All Rights reserved

Electric Starter

REF NO	PART NO	QTY	DESCRIPTION
309	396306		MOTOR, Starter -(4 3/8 Housing)
310B	691263		BOLT -(Starter Motor) (4 3/8 Housing)
311	497608		SET, Brush
510	696541		DRIVE, Starter
513	692024		CLUTCH, Drive
544	-----		Armature-Starter -(Service With 396306 Starter Motor Only)
668A	396515		SPACER -(Starter Motor)
675	691261		WASHER -(Brush Retainer)
697	691058		SCREW -(Drive Cap)
727	692338		COVER-STARTER DRIVE
732	93410		SCREW -(Starter Drive Cover)
783	695708		GEAR-PINION
797	691029		NUT -(Brush Retainer)
801	394802		CAP, Drive -(4 3/8 Housing)
801	394859		CAP, Drive -(3 3/4 Housing)
802	691286		CAP, End
803	-----		Housing-Starter -(Service With 396306 Starter Motor Only)
1051	691265		RING, Retaining
1090	691293		RETAINER, Brush

Not For Reproduction

Mfg. No: 243431-0755-99

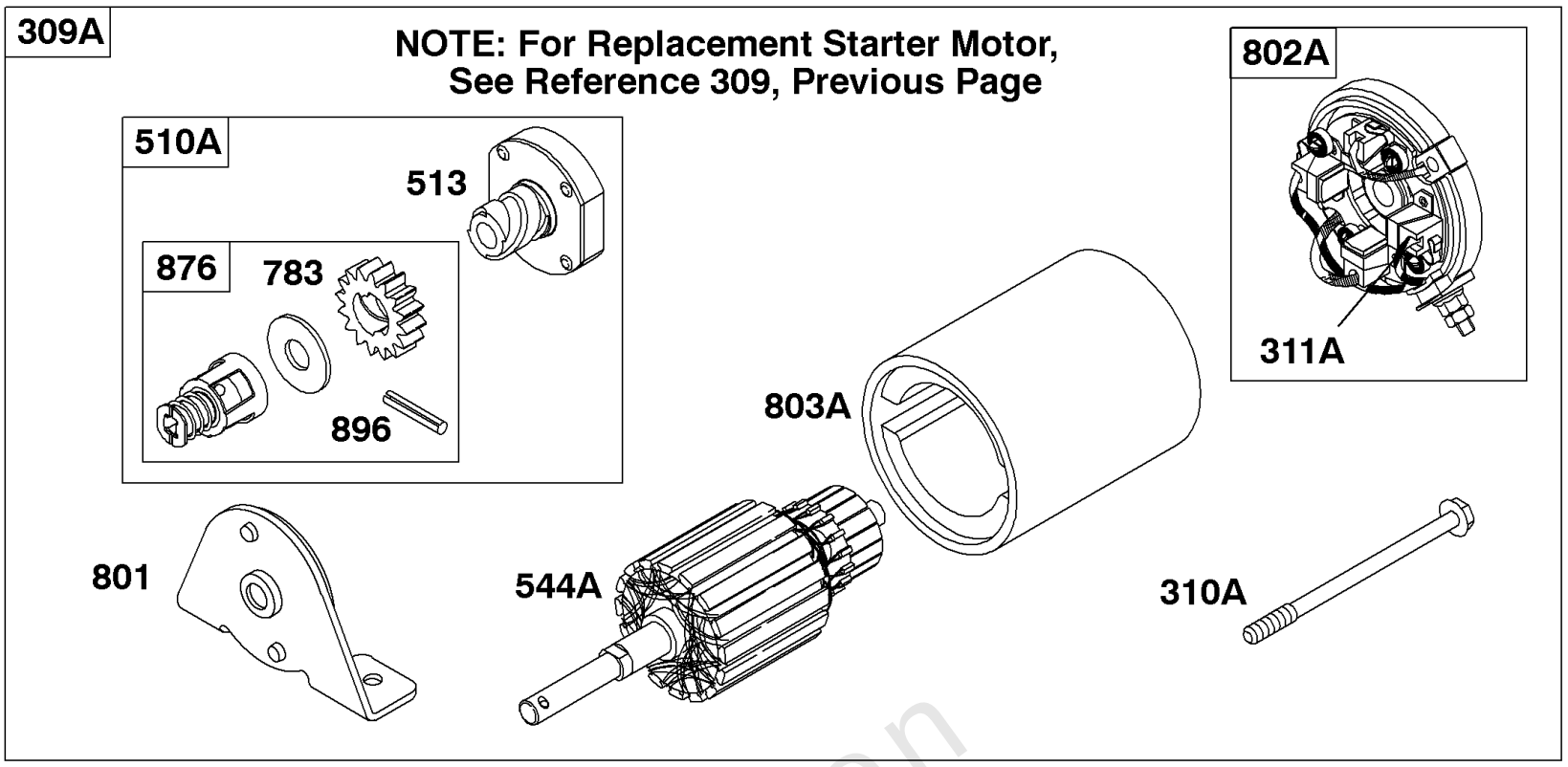

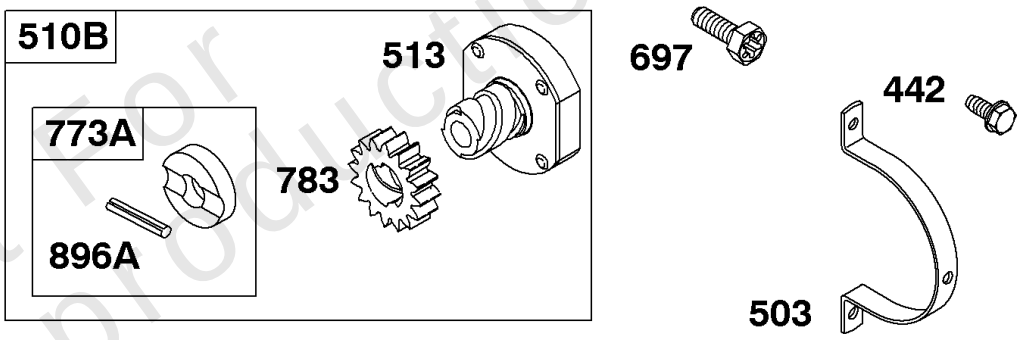

REF. NO.	PART NO.	DESCRIPTION
309A		Motor-Starter (For Replacement Starter Motor, See Reference 309, Previous Page)
310A	**692329**	Bolt (Starter Motor) (5 3/8" Housing Length)
311A	**395538**	Brush Set (4 3/8" Housing Length)
		------- Note -----
		391705 Brush Set (3 3/4" Housing Length)
442	**691693**	Screw (Starter Strap)
503	**690406**	Strap-Starter
510A	**696540**	Drive-Starter (4 3/8" Housing Length)
510B	**696535**	Drive-Starter (3 3/4" Housing Length)
513	**692024**	Clutch-Drive
544A	**490309**	Armature-Starter
697	**691058**	Screw (Drive Cap)
773A	**391462**	Retainer
783	**695708**	Gear-Pinion
801	**394802**	Cap-Drive (4 3/8" Housing Length)
		------- Note -----
		394859 Cap-Drive (3 3/4" Housing Length)
802A	**395537**	Cap-End
803A	**494205**	Housing-Starter
876	**696539**	Kit-Pinion Spring
896	**691641**	Pin-Drive Retainer (Copper)
896A	**94192**	Pin-Drive Retainer (Black)

Not For Reproduction

Copyright © Briggs & Stratton. All Rights reserved

Electric Starter 2

REF NO	PART NO	QTY	DESCRIPTION
309A	-----		Motor-Starter -(For Replacement Starter Motor, See Reference 309, Previous Page)
310A	692329		BOLT -(Starter Motor) (5-3/8 Housing)
311A	395538		SET, Brush -(4 3/8 Housing)
311A	391705		SET, Brush -(3 3/4 Housing)
442	691693		SCREW -(Starter Strap)
503	690406		STRAP, Starter
510A	696540		DRIVE, Starter -(4 3/8 Housing)
510B	696535		DRIVE, Starter -(3 3/4 Housing)
513	692024		CLUTCH, Drive
544A	490309		ARMATURE, Starter -(4 1/2 And 4 3/8 Housing)
697	691058		SCREW -(Drive Cap)
773A	391462		RETAINER
783	695708		GEAR-PINION
801	394802		CAP, Drive -(4 3/8 Housing)
801	394859		CAP, Drive -(3 3/4 Housing)
802A	395537		CAP, End -(3 5/8 Housing)
803A	494205		HOUSING, Starter -(4 3/8 Housing)
876	696539		KIT, Pinion Spring
896	691641		PIN, Drive Retainer -(Copper)
896A	94192		PIN, Drive Retainer -(Black)

Not For Reproduction

Engine Base, Dipstick

Mfg. No: 243431-0755-99

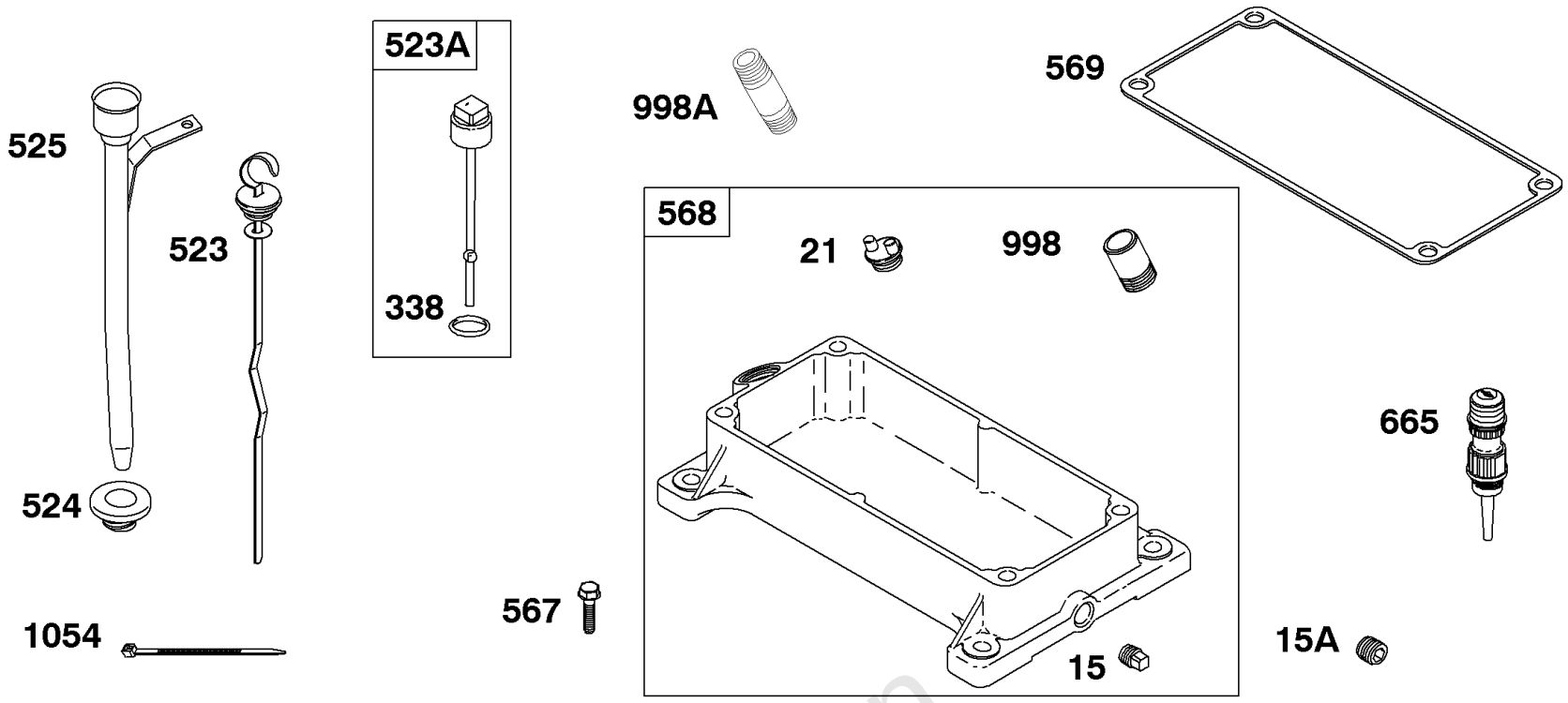

REF. NO.	PART NO.	DESCRIPTION
15	690946	Plug-Oil Drain (Square Head)
15A	691680	Plug-Oil Drain (Hex Socket)
21	281658S	Cap-Oil Fill
338	690270	Gasket-Dipstick Used on Type No(s). 0196, 0626, 0627, 0630, 0665, 0709, 2580.
523	691352	Dipstick
523A	690620	Dipstick Used on Type No(s). 2580.
524	281370S	Seal-Dipstick Tube
525	690624	Tube-Dipstick **------- Note -----** **690623** Tube-Dipstick Used on Type No(s). 1160.
567	691104	Screw (Engine Base)
568	291404	Base-Engine **------- Note -----** **294751** Base-Engine Used on Type No(s). 0020, 0023, 0129, 0132, 0135, 0137, 0146, 0160, 0163, 0164, 0183, 0194, 0195, 0197, 0199, 0520, 0522, 0524, 0527, 0632, 0637, 0640, 0644, 0651, 0652, 0658, 0662, 0670, 0673, 0675, 0676, 0682, 0683, 0684, 0689, 0695, 0696, 0702, 0703, 0707, 0712, 0716, 0740, 0750, 0760, 0764, 1174, 2524. **391165** Base-Engine Used on Type No(s). 0147, 0196, 0620 0626, 0627, 0630, 0653, 0656, 0657, 0660, 0665, 0680, 0685, 0690, 0692, 0709, 0722, 0731, 0738, 0739, 0768, 0771, 0776, 1131, 1148, 1149, 1150, 1160, 2580.
569	691569	Gasket-Engine Base
665	298860	Minder-Oil
998	690502	Pipe-Oil
998A	690307	Pipe-Oil
1054	280275	Tie-Cable

Not For Reproduction

Copyright © Briggs & Stratton. All Rights reserved

Engine Base, Dipstick

REF NO	PART NO	QTY	DESCRIPTION
15	690946		PLUG, Oil Drain -(Square Head)
15A	691680		PLUG, Oil Drain -(Hex Socket)
21	281658S		CAP, Oil Fill
523	691352		DIPSTICK
524	281370S		SEAL, Dipstick Tube -(Dipstick Tube)
525	690623		TUBE, Dipstick
525	690624		TUBE, Dipstick
567	691104		SCREW -(Engine Base)
568	291404		SUMP, Engine
569	691569		GASKET, Crankcase
665	298860		MINDER, Oil
998	690502		PIPE, Oil
998A	690307		PIPE, Oil
1054	280275		TIE, Cable

Not For Reproduction

Mfg. No: 243431-0755-99

358 ENGINE GASKET SET

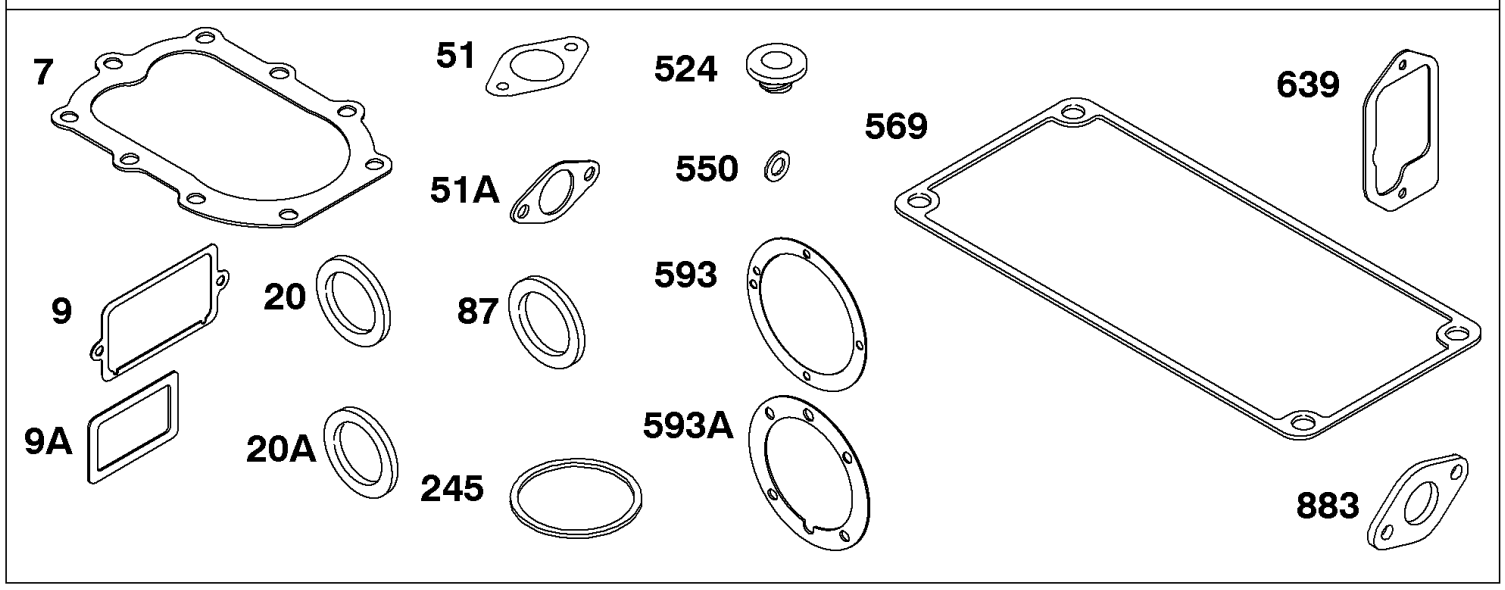

121 CARBURETOR OVERHAUL KIT

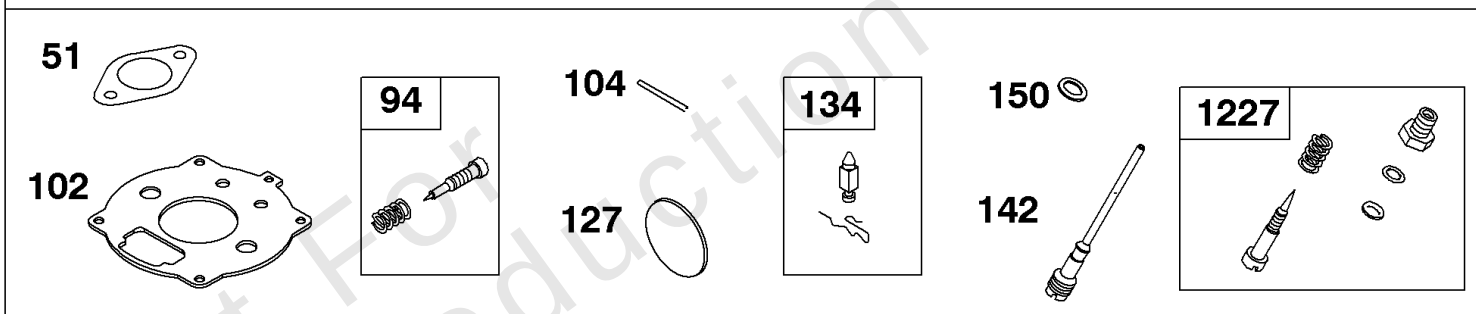

REF. NO.	PART NO.	DESCRIPTION
7	**692230**	Gasket-Cylinder Head
9	**27803S**	Gasket-Breather
9A	**66214**	Gasket-Breather
20	**291675S**	Seal-Oil (PTO Side)
20A	**299819S**	Seal-Oil (PTO Side)
51	**692214**	Gasket-Intake
51A	**27381S**	Gasket-Intake
87	**391086S**	Seal-Gear Reduction
94	**292681**	Kit-Idle Mixture
102	**692215**	Gasket-Carburetor Body
104	**691775**	Pin-Float Hinge
121	**394989**	Kit-Carburetor Overhaul (Used After Code Date 81101100). **------- Note -----** **391071** Kit-Carburetor Overhaul (Used Before Code Date 81101200).
127	**690627**	Plug-Welch
134	**394681**	Kit-Needle/Seat
142	**691966**	Nozzle-Carburetor (Standard) (Labeled B) (Used After Code Date 81101100). **------- Note -----** **390950** Nozzle-Carburetor (Standard) (Labeled B) (#40 Jet) (Used Before Code Date 81101200).
150	**691610**	Gasket-Nozzle
245	**692190**	Gasket-Fuel Bowl
358	**299101**	Gasket Set-Engine
524	**281370S**	Seal-Dipstick Tube
550	**22353**	Washer (Valve Cover)
569	**691569**	Gasket-Engine Base
593	**691311**	Gasket-Bearing Support (.015" Thick)
593A	**690268**	Gasket-Bearing Support (.015" Thick) **------- Note -----** **27374** Gasket-Bearing Support (.005" Thick) **27375** Gasket-Bearing Support (.009" Thick)
639	**692913**	Gasket-Breaker Box
883	**692236**	Gasket-Exhaust
1227	**99525**	Valve-High Speed

Not For Reproduction

Copyright © Briggs & Stratton. All Rights reserved

Engine Gasket Set, Carburetor Overhaul Kit

REF NO	PART NO	QTY	DESCRIPTION
7	692230		GASKET, Cylinder Head
9	27803S		GASKET, Breather
9A	66214		GASKET, Rocker Cover
20A	299819S		SEAL, Oil -(PTO Side)
51	692214		GASKET, Intake -(Manifold To Carburetor)
51A	27381S		GASKET, Intake -(Manifold To Engine)
87	391086S		SEAL, Oil
94	292681		VALVE, Idle Mixture
102	692215		GASKET, Carburetor Body
104	691775		PIN, Float Hinge
121	391071		KIT, Carburetor Overhaul -Used Before Code Date 81101200
121	394989		KIT, Carburetor Overhaul -Used After Code Date 81101100
127	690627		PLUG, Welch
134	394681		KIT, Needle/Seat -(Gravity Feed)
134	394682		KIT, Needle/Seat -(Includes Brass Seat)
134	394683		KIT, Needle/Seat -(Includes Brass Seat)(Use With Impulse Pump)
142	390950		NOZZLE, Carburetor -(Standard) (Labeled B)(#40 Jet) -Used Before Code Date 81101200
142	691966		NOZZLE, Carburetor -(Standard) (Labeled B) -Used After Code Date 81101100
150	691610		GASKET, Nozzle
245	692190		GASKET, Fuel Bowl
358	299101		GASKET SET, Engine
524	281370S		SEAL, Dipstick Tube -(Dipstick Tube)
550	22353		WASHER -(Valve Cover)
569	691569		GASKET, Crankcase
593	691311		GASKET, Crankcase Cover -(.015)
593A	690268		GASKET, Bearing Support -(.015)
593A	27375		GASKET, Bearing Support -(.009)
593A	27374		GASKET, Bearing Support -(.005)
639	692913		GASKET, Breaker Box
883	692236		GASKET, Exhaust
1227	99525S		VALVE, High Speed

Not For Reproduction

Copyright © Briggs & Stratton. All Rights reserved

Mfg. No: 243431-0755-99

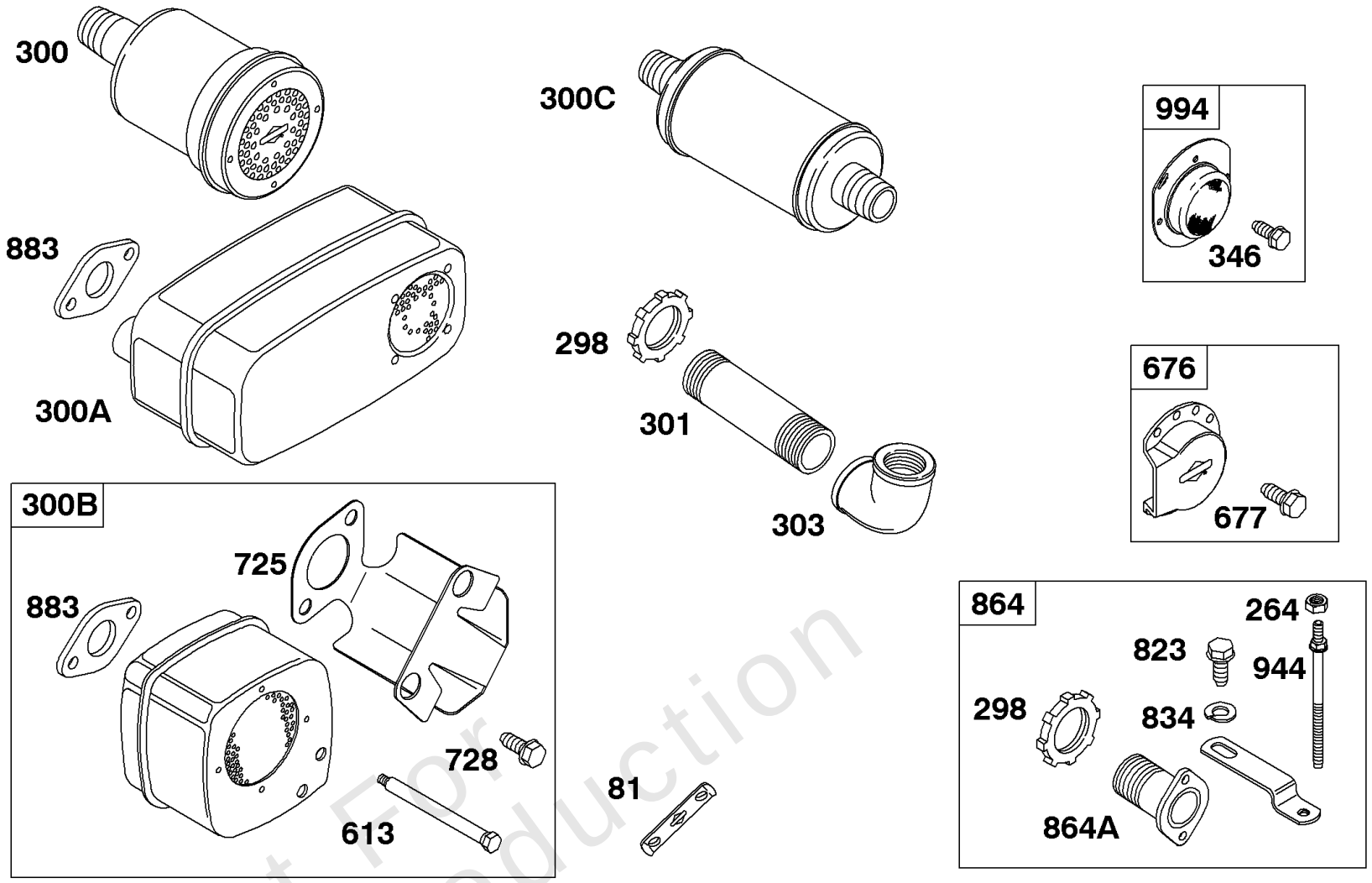

REF. NO.	PART NO.	DESCRIPTION
81	**691178**	Lock-Muffler Screw
264	**691105**	Nut (Muffler Adapter)
298	**691808**	Locknut-Muffler/Elbow
300	**299477S**	Muffler
300A	**498984S**	Muffler (Super Lo Tone)
300B	**399635**	Muffler
300C	**291519**	Muffler
301	**91416**	Pipe-Exhaust
303	**91296**	Elbow-Exhaust
		------- Note -----
		690281 Elbow-Exhaust Used on Type No(s). 1141, 1151, 2580. **91415** Elbow-Exhaust Used on Type No(s). 0771, 0776, 1149.
346	**690661**	Screw (Spark Arrestor)
613	**691416**	Screw (Muffler)
676	**393761**	Deflector-Muffler
677	**690661**	Screw (Muffler Deflector)
725	**690420**	Shield-Heat
728	**690810**	Screw (Heat Shield)
823	**691108**	Screw (Muffler Adapter)
834	**691075**	Washer (Muffler Adapter)
864	**394584**	Adapter-Muffler
864A	**690637**	Adapter-Muffler
883	**692236**	Gasket-Exhaust
944	**691690**	Stud (Muffler Adapter)
994	**392390**	Arrestor-Spark

Not For Reproduction

Copyright © Briggs & Stratton. All Rights reserved

Exhaust System

REF NO	PART NO	QTY	DESCRIPTION
81	691178		LOCK, Muffler Screw
264	691105		LOCKNUT -(Muffler Adapter)
298	691808		LOCKNUT -(Muffler and Elbow)
300	299477S		MUFFLER
300A	498984S		MUFFLER -(Super Lo Tone)
300B	399635		MUFFLER -(Square Lo Tone)
300C	291519		MUFFLER
301	91416		ELBOW, Exhaust -(1 1/2)
303	91296		ELBOW, Exhaust -(90 Degree)
346	690661		SCREW -(Spark Arrestor)
613	691416		SCREW -(Muffler)
676	393761		DEFLECTOR, Muffler -(Side Outlet)
677	690661		SCREW -(Muffler Deflector)
725	690420		SHIELD, Heat
728	690810		SCREW -(Heat Shield)
823	691108		SCREW -(Muffler Adapter)
834	691075		WASHER -(Muffler Adapter)
864	394584		ADAPTER, Muffler
864A	690637		ADAPTER, Muffler
883	692236		GASKET, Exhaust
944	691690		STUD -(Muffler Adapter)
994	392390		ARRESTOR, Spark

Not For Reproduction

Flywheel, Rotating Screen

Mfg. No: 243431-0755-99

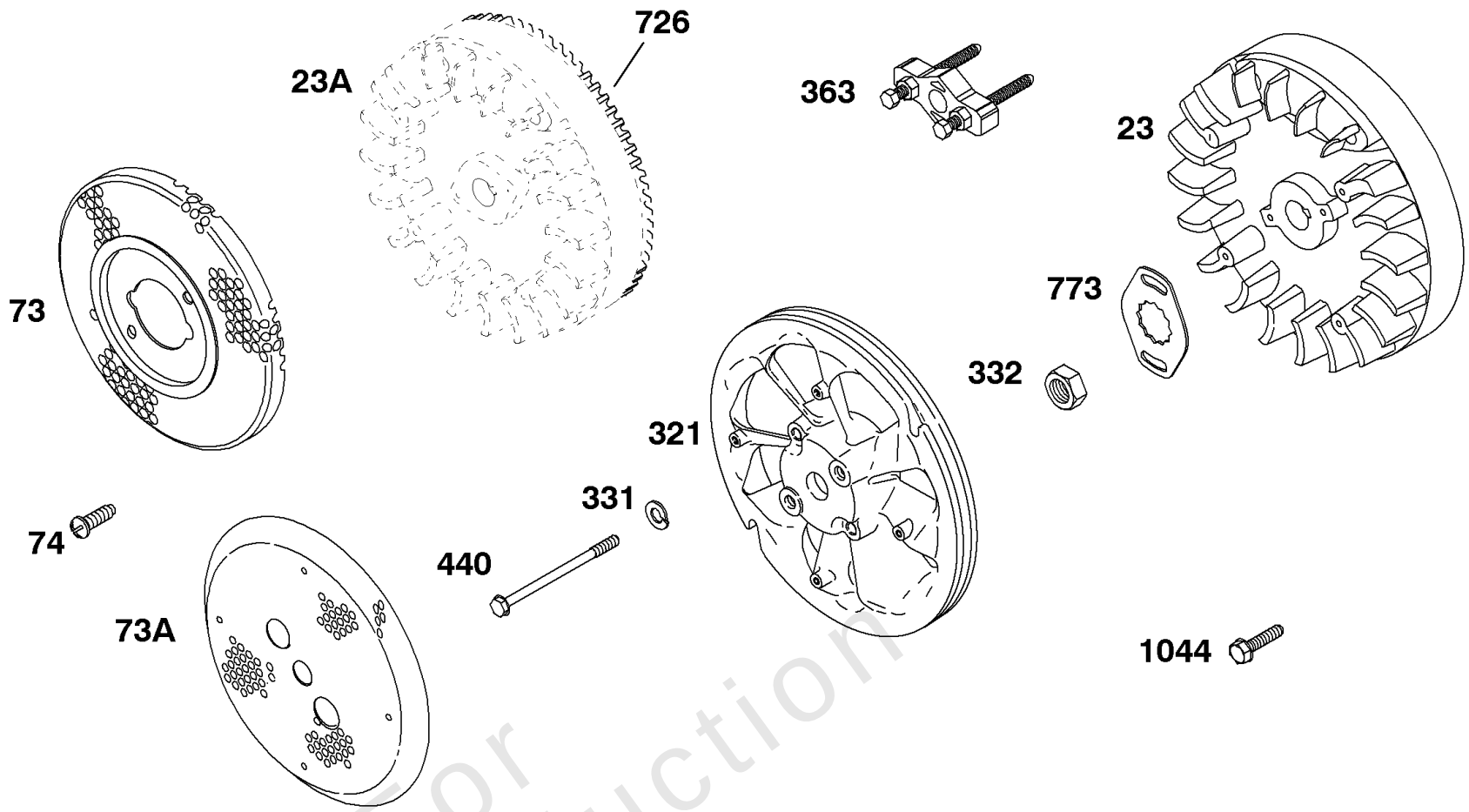

REF. NO.	PART NO.	DESCRIPTION
23	**395250**	Flywheel
23A		Flywheel **(NO LONGER AVAILABLE)**
73	**690628**	Screen-Rotating
73A	**691171**	Screen-Rotating **------- Note -----** **690404** Screen-Rotating Used on Type No(s). 0627, 0630, 0665, 0709, 2580.
74	**691655**	Screw (Rotating Screen)
321	**691151**	Fan-Booster
331	**691075**	Washer (Booster Fan)
332	**691059**	Nut (Flywheel)
363	**19203**	Puller-Flywheel
440	**691076**	Screw (Booster Fan)
726	**391362**	Gear-Ring (Includes Mounting Hardware)
773	**690265**	Retainer
1044	**691058**	Screw (Flywheel)

Not For Reproduction

Copyright © Briggs & Stratton. All Rights reserved

Flywheel, Rotating Screen

REF NO	PART NO	QTY	DESCRIPTION
23	395250		FLYWHEEL -(All Are Identified By Two Red Stripes)
23A	-----		Flywheel -(NO LONGER AVAILABLE)
73	690628		SCREEN, Rotating
73A	691171		SCREEN, Rotating
74	691655		SCREW -(Rotating Screen)
321	691151		FAN, Booster
331	691075		WASHER -(Booster Fan)
332	691059		NUT -(Flywheel)
363	19203		PULLER, Flywheel
440	691076		SCREW -(Booster Fan)
726	391362		GEAR, Ring -(Includes Mounting Hardware)
773	690265		RETAINER
1044	691058		SCREW -(Flywheel)

Not For Reproduction

Fuel Filter, Fuel Pump, Fuel Line

Mfg. No: 243431-0755-99

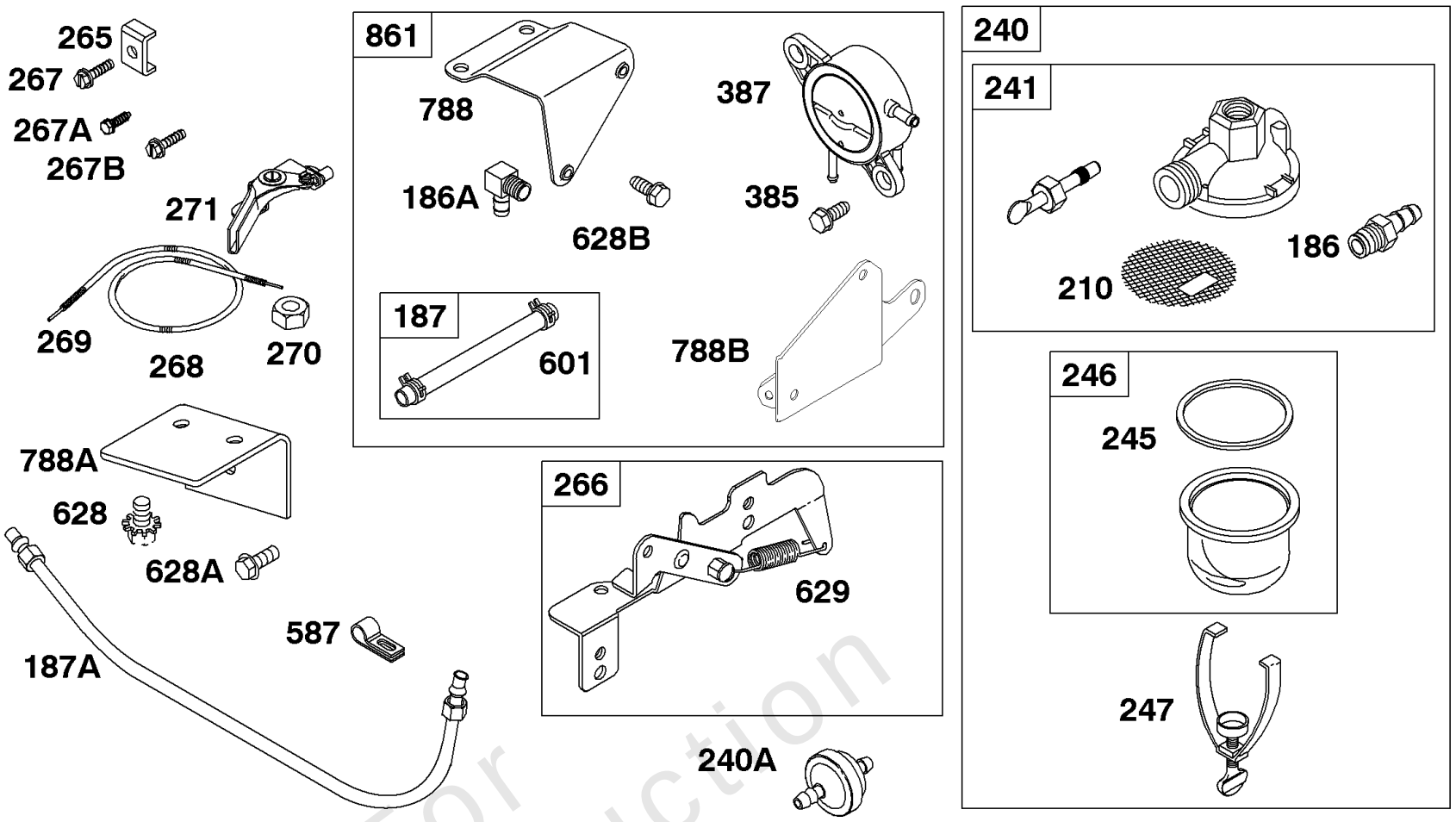

REF. NO.	PART NO.	DESCRIPTION
186	**691764**	Connector-Hose
186A	**691609**	Connector-Hose (Fuel Pump)
187	**499167**	Line-Fuel
187A	**298861**	Line-Fuel (Metal)
		------- Note -----
		299322 Line-Fuel (Metal) (20" Long)
		89248 Line-Fuel (Metal) (2 1/4" Long)
210	**691962**	Strainer-Fuel
240	**690612**	Filter-Fuel
240A	**298090S**	Filter-Fuel
		------- Note -----
		394358S Filter-Fuel (White)
241	**99909**	Cover-Fuel Filter (Used With Metal Fuel Line)
		------- Note -----
		Cover-Fuel Filter (Used With Flexible Fuel Line. See Reference 240)
245	**692190**	Gasket-Fuel Bowl
246	**298683**	Bowl-Fuel Filter
247	**691700**	Yoke-Bowl
265	**692179**	Clamp-Casing
266	**494554**	Control-Throttle
		------- Note -----
		299361 Control-Throttle Used on Type No(s). 1144.
267	**93107**	Screw (Casing Clamp)
267A	**690305**	Screw (Casing Clamp) Used on Type No(s). 1139, 1156, 1162.
		------- Note -----
		691044 Screw (Casing Clamp) Used on Type No(s). 0120, 0121, 0162, 0163, 0713.
267B	**691082**	Screw (Casing Clamp) Used on Type No(s). 1143, 1147, 1153.
268	**691025**	Casing-Control Wire (Cut to Required Length)
269	**691026**	Wire-Control (Cut to Required Length)
270	**691027**	Nut (Control Wire Casing)
271	**691028**	Lever-Control
385	**692198**	Screw (Fuel Pump)
387	**808656**	Pump-Fuel
587	**690389**	Clamp-Cable
601	**791850**	Clamp-Hose
628		Screw **(NO LONGER AVAILABLE)**
628A	**691058**	Screw (Fuel Pump Bracket)
628B	**690661**	Screw (Fuel Pump Bracket)
629	**690538**	Spring-Throttle Return
788	**224123**	Bracket-Fuel Pump
788A	**223610**	Bracket-Fuel Pump
788B	**690458**	Bracket-Fuel Pump
861	**494280**	Kit-Fuel Pump

Not For Reproduction

Copyright © Briggs & Stratton. All Rights reserved

Fuel Filter, Fuel Pump, Fuel Line

REF NO	PART NO	QTY	DESCRIPTION
186	691764		CONNECTOR-HOSE -(Pulse Line)
186A	691609		CONNECTOR, Hose -(Fuel Pump)
187	499167		LINE, Fuel -(Cut To Required Length)
187A	89248		LINE, Fuel -(2 1/4) (Metal)
187A	299322		LINE, Fuel -(Metal)(20)
187A	298861		LINE, Fuel -(Metal)
210	691962		STRAINER, Fuel
240	690612		FILTER, Fuel
240A	298090S		FILTER, Fuel
241	-----		Cover-Fuel Filter -(Used With Flexible Fuel Line. See Reference Number 240 For CompleteFilter)
241	99909		COVER, Fuel Filter -(Metal Fuel Pipe)
245	692190		GASKET, Fuel Bowl
246	298683		BOWL, Fuel Filter
247	691700		YOKE, Bowl
265	692179		CLAMP-CASING
266	494554		CONTROL, Throttle
267	93107		SCREW -(Casing Clamp)
268	691025		CASING, Control Wire -(Cut To Required Length)
269	691026		WIRE, Control -(Cut To Required Length)
270	691027		NUT -(Control Wire Casing)
271	691028		LEVER, Control
385	692198		SCREW -(Fuel Pump)
387	808656		PUMP, Fuel
587	690389		CLAMP, Cable
601	791850		CLAMP, Hose
628	-----		Screw -(Fuel Pump Bracket) (NO LONGER AVAILABLE)
628A	691058		SCREW -(Fuel Pump Bracket)
628B	690661		SCREW -(Fuel Pump Bracket)
629	690538		SPRING, Throttle Return -(Throttle Return)
788	224123		BRACKET, Fuel Pump
788A	223610		BRACKET, Fuel Pump
788B	690458		BRACKET, Fuel Pump
861	494280		PUMP, Fuel -(1/4 O.D.)

Not For Reproduction

Copyright © Briggs & Stratton. All Rights reserved

Mfg. No: 243431-0755-99

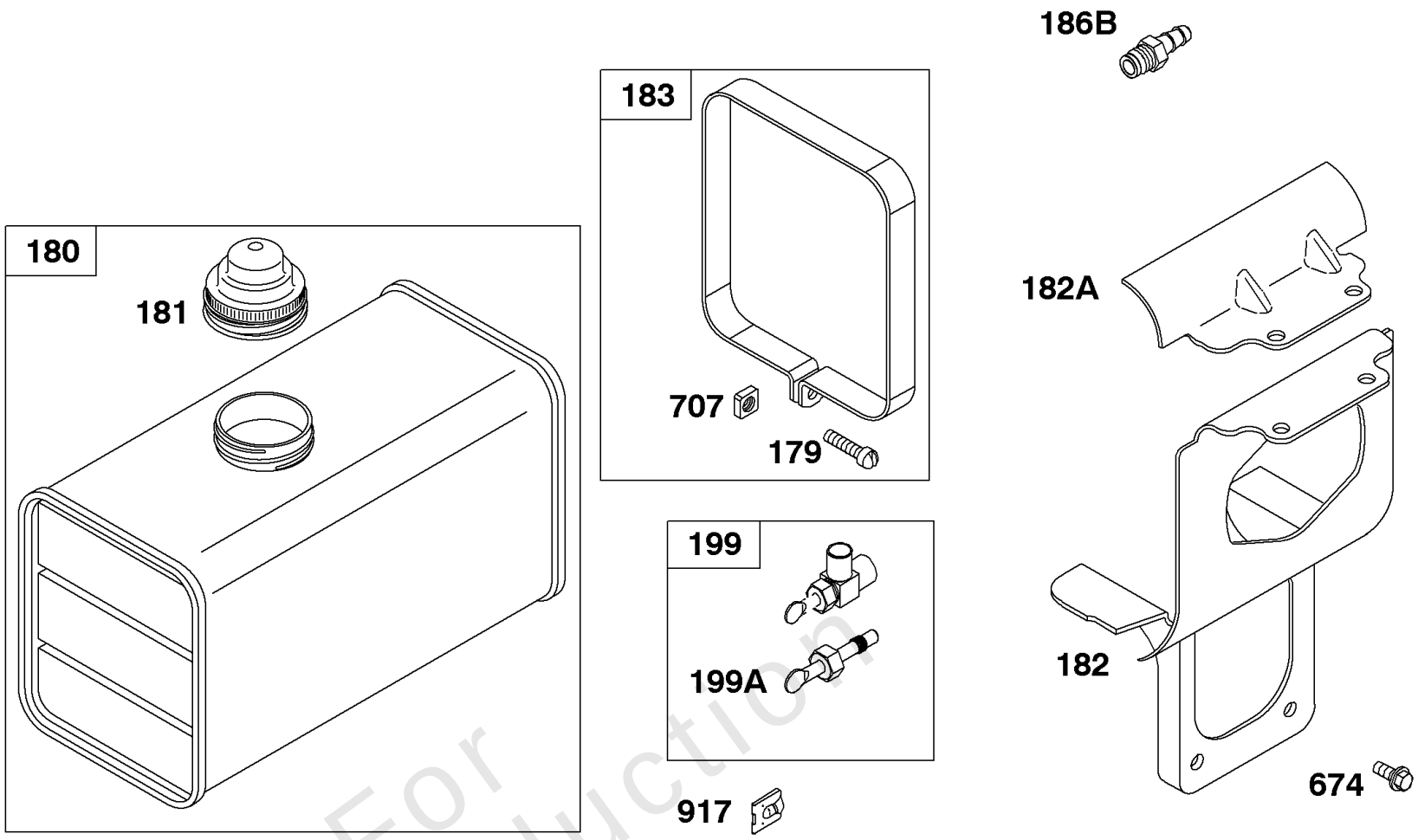

Not For Reproduction

REF. NO.	PART NO.	DESCRIPTION
179	**690280**	Screw (Fuel Tank Strap)
180	**291488**	Tank-Fuel (6 Quart)
		------- Note -----
		290816 Tank-Fuel (4 Quart) Used on Type No(s). 0130, 0190, 0636, 0661, 0736, 0797, 1136.
		292415 Tank-Fuel (8 Quart) Used on Type No(s). 0125, 0140, 0154, 0157, 0179, 0187, 0644, 0654, 0657, 0660, 0679, 0686, 0689, 0697, 0707, 0720, 0731, 0732, 0749, 0750, 0758, 0760, 0765, 0768, 0773, 1131, 1137, 1138, 1141, 1150, 1168, 1173.
181	**791545**	Cap-Fuel Tank
182	**690262**	Bracket-Fuel Tank
182A	**691068**	Bracket-Fuel Tank
183	**691937**	Strap-Fuel Tank
		------- Note -----
		291367 Strap-Fuel Tank Used on Type No(s). 0130, 0190, 0636, 0661, 0736, 0797, 1136.
186B	**231238**	Connector-Hose (Used With Metal Fuel Line)
199	**692302**	Valve-Fuel Shut Off
199A	**691940**	Valve-Fuel Shut Off
674	**691058**	Screw (Fuel Tank Bracket)
707	**690279**	Nut (Fuel Tank Strap)
917	**691737**	Handle-Shut Off Valve

Copyright © Briggs & Stratton. All Rights reserved

Fuel Tank, Brackets

REF NO	PART NO	QTY	DESCRIPTION
179	690280		SCREW -(Fuel Tank Strap)
180	291488		TANK, Fuel -(Metal) (6 Quart)
181	791545		CAP, Fuel Tank -(Metal)
182	690262		BRACKET, Fuel Tank
182A	691068		BRACKET, Fuel Tank
183	691937		STRAP, Fuel Tank
186B	231238		CONNECTOR, Hose -(Metal Fuel Pipe)
199	692302		VALVE, Fuel Shut Off -(Metal)
199A	691940		VALVE, Fuel Shut Off -(Metal)
674	691058		SCREW -(Fuel Tank Bracket)
707	690279		NUT -(Fuel Tank Strap)
917	691737		VALVE, Handle Shutoff

Not For Reproduction

Copyright © Briggs & Stratton. All Rights reserved

Gear Reduction, Gear Cover

Mfg. No: 243431-0755-99

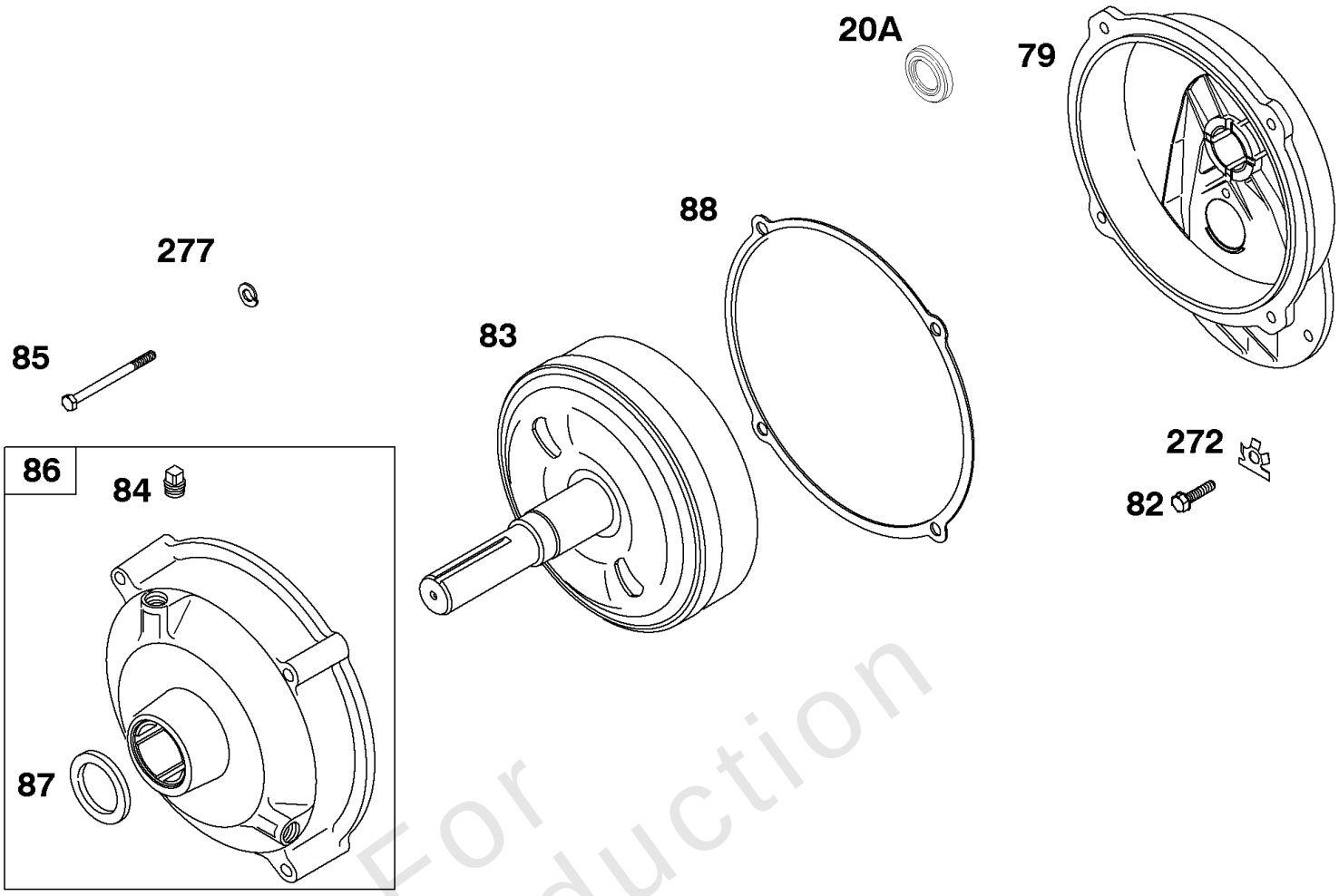

REF. NO.	PART NO.	DESCRIPTION
20A	**299819S**	Seal-Oil (PTO Side)
79		Case-Gear Reduction **(NO LONGER AVAILABLE)**
82	**691058**	Screw (Gear Reduction Case)
83	**690387**	Shaft-Auxiliary Drive
84	**690283**	Plug-Breather
85	**691076**	Screw (Gear Cover To Gear Reduction Case)
86	**690606**	Cover-Gear
87	**391086S**	Seal-Gear Reduction
88	**691601**	Gasket-Gear Reduction Cover
272	**690391**	Lock-Screw Head (Gear Reduction Case)
277	**691075**	Washer (Gear Case To Gear Reduction)

Not For Reproduction

Copyright © Briggs & Stratton. All Rights reserved

Gear Reduction, Gear Cover

REF NO	PART NO	QTY	DESCRIPTION
20A	299819S		SEAL, Oil -(PTO Side)
79	-----		Case-Gear Reduction -(NO LONGER AVAILABLE)
82	691058		SCREW -(Gear Reduction Case)
83	690387		SHAFT, Auxiliary Drive
84	690283		PLUG, Oil -(1/8 Standard)
85	691076		SCREW -(Gear Cover to Gear Reduction Case)
86	690606		COVER, Gear
87	391086S		SEAL, Oil
88	691601		GASKET, Gear Cover/Housing
272	690391		LOCK, Screw Head -(Gear Reduction Case)
277	691075		WASHER -(Gear Case To Gear Reduction)

Not For Reproduction

Governor Spring, Bell Crank, Control Levers

Mfg. No: 243431-0755-99

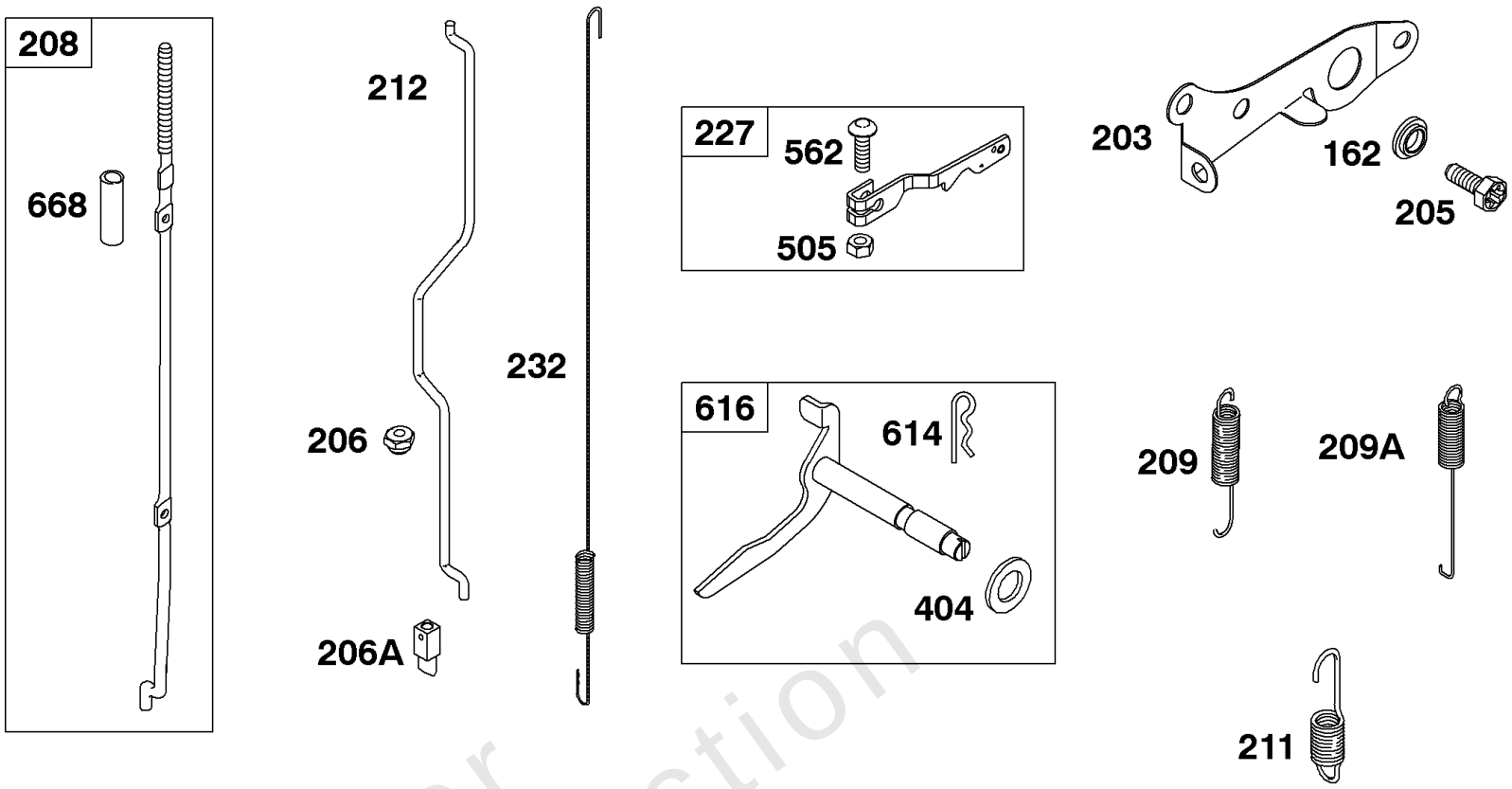

REF. NO.	PART NO.	DESCRIPTION
162	**690267**	Collar-Bell Crank
203	**690263**	Crank-Bell **------- Note -----** **299428** Crank-Bell Used on Type No(s). 0140.
205	**690810**	Screw (Bell Crank)
206	**691079**	Nut-Governor Adjusting
206A	**691584**	Nut-Governor Adjusting
208	**393613**	Rod-Governor Control
209	**691596**	Spring-Governor
209A	**691789**	Spring-Governor Used on Type No(s). 1111, 1133, 1136, 1164, 1170, 2520, 2528, 2561, 2580.
211	**691790**	Spring-Governed Idle Used on Type No(s). 1111, 1133, 1136, 1164, 1170, 2520, 2528, 2561, 2580.
212	**691595**	Link-Throttle **------- Note -----** **691791** Link-Throttle Used on Type No(s). 0147, 0148, 0178, 0192, 0193, 0626, 0627, 0630, 0639, 0648, 0649, 0653, 0656, 0665, 0709, 0722, 2580.
227	**690607**	Lever-Governor Control **------- Note -----** **690616** Lever-Governor Control Used on Type No(s). 1111, 1133, 1136, 1164, 1170, 2520, 2528, 2561, 2580.
232	**692207**	Spring-Governor Link **------- Note -----** **690545** Spring-Governor Link Used on Type No(s). 0627, 0630, 0639, 0648, 0709, 2580.
404	**690264**	Washer (Governor Crank)
505	**691251**	Nut (Governor Control Lever)
562	**92613**	Bolt (Governor Control Lever)
614	**691620**	Pin-Cotter
616	**291364**	Crank-Governor
668	**690313**	Spacer (Governor Control Rod)

Not For Reproduction

Copyright © Briggs & Stratton. All Rights reserved

Governor Spring, Bell Crank, Control Levers

REF NO	PART NO	QTY	DESCRIPTION
162	690267		BUSHING
203	690263		CRANK, Bell
205	690810		SCREW -(Bell Crank)
206	691079		NUT, Governor Adjusting
206A	691584		NUT, Governor Adjusting
208	393613		ROD, Governor Control
209	691596		SPRING, Governor
212	691595		LINK, Throttle
227	690607		LEVER, Governor Control
232	692207		SPRING/LINK, Governor
404	690264		WASHER -(Governor Crank)
505	691251		NUT -(Governor Control Lever)
562	92613		BOLT -(Governor Lever)
614	691620		PIN, Cotter
616	291364		CRANK, Governor
668	690313		SPACER

Not For Reproduction

Copyright © Briggs & Stratton. All Rights reserved

Mfg. No: 243431-0755-99

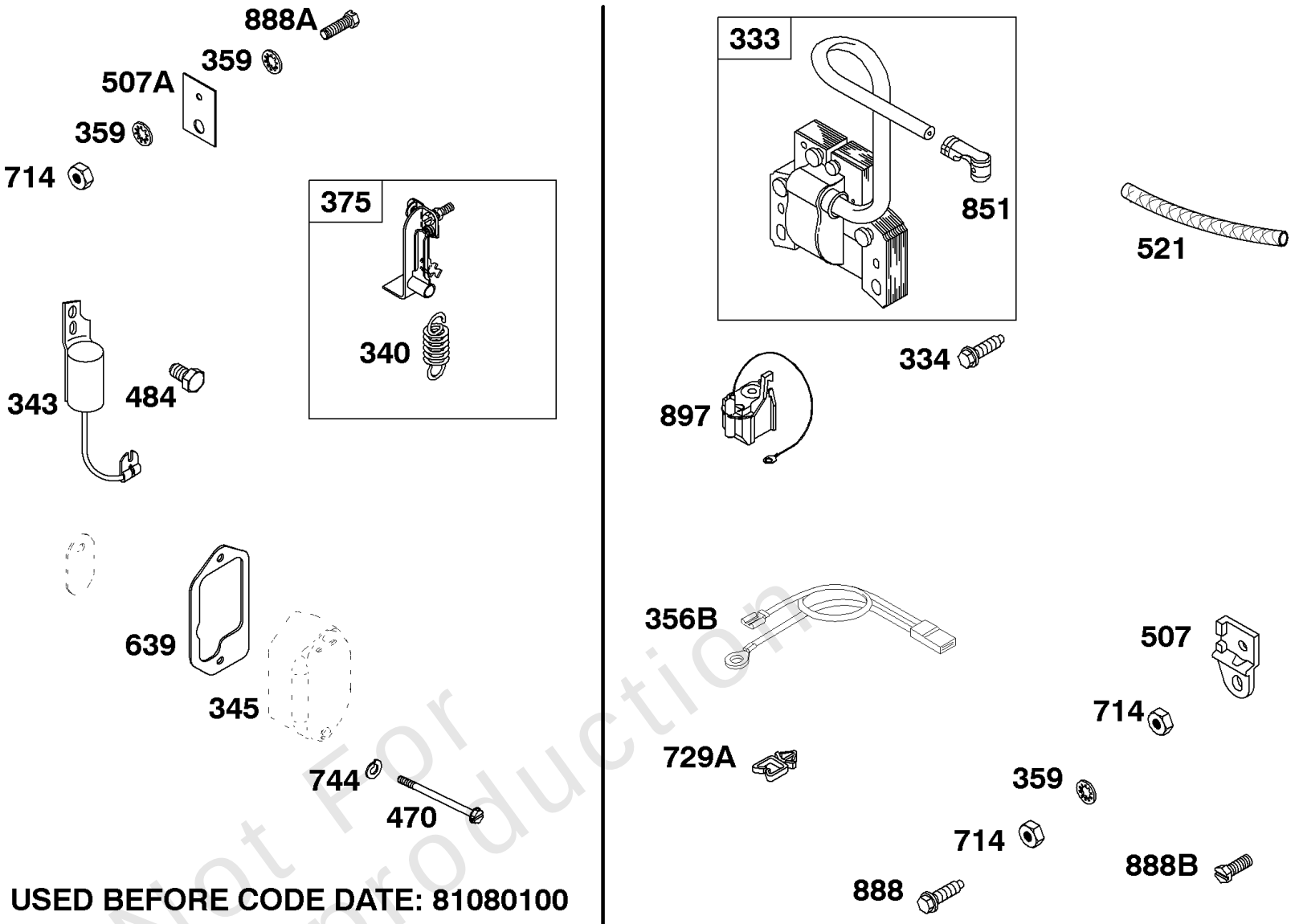

USED BEFORE CODE DATE: 81080100

Not For Reproduction

REF. NO.	PART NO.	DESCRIPTION
333	**398811**	Armature-Magneto (Used After Code Date 81073100). **------- Note -----** **298968** Armature-Magneto (Used Before Code Date 81080100).
334	**691061**	Screw (Magneto Armature)
340	**26018**	Spring-Breaker Arm
343	**298060**	Condenser
345		Cover-Breaker **(NO LONGER AVAILABLE)**
356B	**690650**	Wire-Stop
359	**691077**	Washer (Ground Terminal)
375	**298185**	Breaker-Ignition
470	**692836**	Screw (Breaker Cover)
484	**690295**	Screw (Condenser)
507	**690584**	Insulator
507A	**66895**	Insulator **------- Note -----** **299598** Insulator Used on Type No(s). 0168, 0175, 0179, 0628, 0629.
521	**291508**	Shield-Cable
639	**692913**	Gasket-Breaker Box
714	**691612**	Nut (Stop Wire)
729A	**690588**	Clip-Wire
744	**690277**	Washer (Breaker Cover)
851	**493880S**	Terminal-Spark Plug
888	**690292**	Screw (Insulator)
888A	**90200**	Screw (Insulator)
888B	**690295**	Screw (Insulator)
897	**394970**	Kit-MAGNETRON® Ignition

Copyright © Briggs & Stratton. All Rights reserved

Ignition Breaker, Magneto Armature

REF NO	PART NO	QTY	DESCRIPTION
333	298968		ARMATURE, Magneto -Used Before Code Date 81080100
333	398811		ARMATURE, Magneto -Used After Code Date 81073100
334	691061		SCREW -(Magneto Armature)
340	26018		SPRING, Breaker Arm
343	298060		CONDENSER
345	-----		Cover-Breaker -(NO LONGER AVAILABLE)
356B	690650		WIRE, Stop
359	691077		WASHER -(Ground Terminal)
375	298185		BREAKER, Ignition
470	692836		SCREW -(Breaker Cover)
484	690295		SCREW -(Condensor)
507	690584		INSULATOR
507A	66895		INSULATOR
521	291508		SHIELD, Protective
639	692913		GASKET, Breaker Box
714	691612		NUT -(Wire Stop)
729A	690588		CLIP, Wire
744	690277		WASHER -(Breaker Cover)
851	493880S		TERMINAL, Spark Plug
888	690292		SCREW -(Insulator)
888A	90200		SCREW -(Insulator)
888B	690295		SCREW -(Insulator)
897	394970		KIT, Magnetron Ignition

Not For Reproduction

Copyright © Briggs & Stratton. All Rights reserved

Intake Manifold, Air Cleaner

Mfg. No: 243431-0755-99

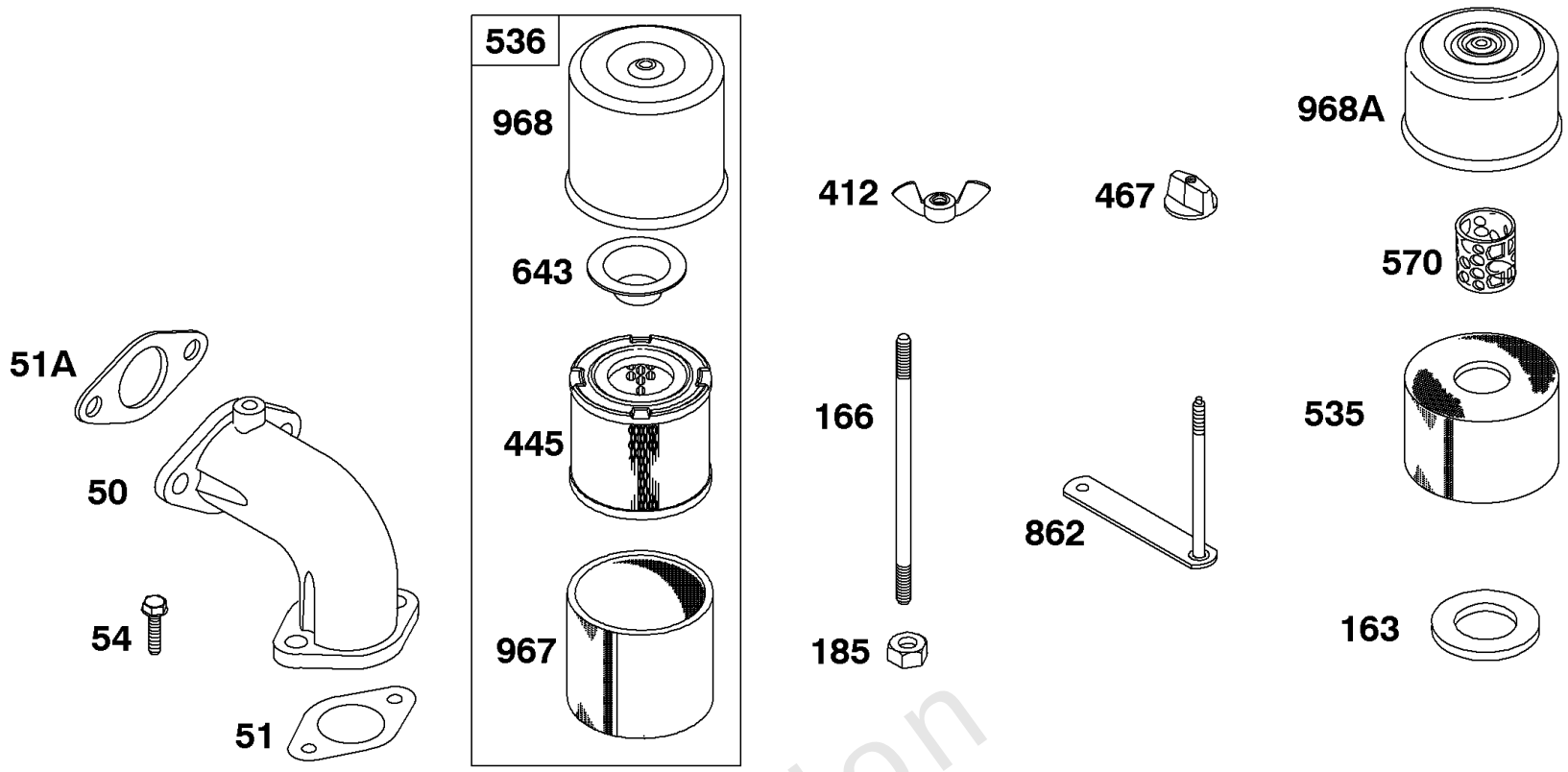

REF. NO.	PART NO.	DESCRIPTION
50	**692525**	Manifold-Intake **------- Note -----** **691152** Manifold-Intake Used on Type No(s). 0147, 0148, 0178, 0192, 0193, 0626, 0627, 0630, 0639, 0648, 0649, 0653, 0656, 0665, 0709, 0718, 0722, 0735, 2580.
51	**692214**	Gasket-Intake (Manifold to Carburetor)
51A	**27381S**	Gasket-Intake (Manifold to Engine)
54	**691681**	Screw (Intake Manifold) **------- Note -----** **690953** Screw (Intake Manifold) Used on Type No(s). 0147, 0148, 0178, 0192, 0193, 0626, 0627, 0630, 0639, 0648, 0649, 0653, 0656, 0665, 0709, 0718, 0722, 0735, 2580.
163	**67247**	Gasket-Air Cleaner
166	**691241**	Stud (Air Cleaner) **------- Note -----** **231206** Stud (Air Cleaner) Used on Type No(s). 0131, 0137, 0150, 0152, 0165. **231207** Stud (Air Cleaner) Used on Type No(s). 0189. **230840** Stud (Air Cleaner) Used on Type No(s). 0123, 0176, 0196.
185	**690284**	Nut (Air Cleaner Base)
412	**691331**	Nut (Air Cleaner Cover)
445	**393957S**	Filter-Air Cleaner Cartridge
467	**691668**	Knob-Air Cleaner
535	**270093**	Filter-Air Cleaner Foam
536	**391063**	Cleaner-Air **------- Note -----** **393858** Cleaner-Air (Air Cleaner Elbow Kit No. **545032** Supplied by Equipment Manufacturer When Using Briggs & Stratton Service Carburetor **391073**) (Replaces Oil Bath) Used on Type No(s). 0122.
570	**280001**	Support-Foam Element
643	**691730**	Retainer-Air Filter
862	**297749**	Strap/Stud-Air Cleaner Mounting Used on Type No(s). 0122.
967	**271794S**	Filter-Pre Cleaner
968	**691755**	Cover-Air Cleaner
968A	**221468**	Cover-Air Cleaner

Not For Production

Copyright © Briggs & Stratton. All Rights reserved

Intake Manifold, Air Cleaner

REF NO	PART NO	QTY	DESCRIPTION
50	692525		MANIFOLD, Intake
51	692214		GASKET, Intake -(Manifold To Carburetor)
51A	27381S		GASKET, Intake -(Manifold To Engine)
54	691681		SCREW -(Intake Manifold)
163	67247		GASKET, Air Cleaner -(Air Cleaner)
166	691241		STUD -(Air Cleaner)
185	690284		NUT -(Air Cleaner Base)
412	691331		NUT -(Air Cleaner Cover)
445	393957S		FILTER, A/C Cartridge
467	691668		KNOB, Air Cleaner Cover
535	270093		FILTER, Air Cleaner Foam
536	391063		CLEANER, Air
570	280001		SUPPORT, Foam Element
643	691730		RETAINER, Air Filter
967	271794S		FILTER, Pre Cleaner
968	691755		COVER, Air Cleaner
968A	221468		COVER, Air Cleaner

Not For Reproduction

Copyright © Briggs & Stratton. All Rights reserved

Piston, Connecting Rod, Bearing Support

Mfg. No: 243431-0755-99

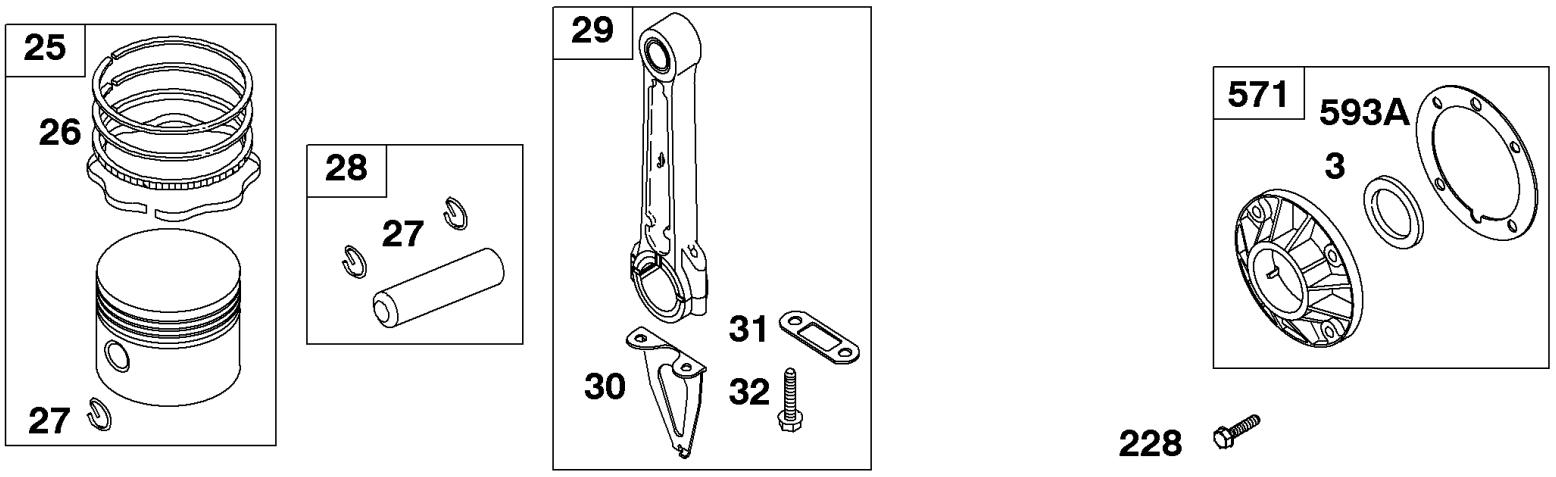

REF. NO.	PART NO.	DESCRIPTION
3	**391086S**	Seal-Oil (Magneto Side)
25	**792361**	Piston Assembly (Standard) **------- Note -----** **299087** Piston Assembly (.020" Oversize)
26	**792362**	Ring Set (Standard) **------- Note -----** **792364** Ring Set (.020" Oversize)
27	**691073**	Lock-Piston Pin
28	**298401**	Pin-Piston (Standard) **------- Note -----** **294681** Pin-Piston (.005" Oversize)
29	**299080**	Rod-Connecting (Standard) **------- Note -----** **390305** Rod-Connecting (.020" Undersize)
30	**691726**	Dipper-Connecting Rod
31	**690396**	Lock-Rod Screw
32	**691765**	Screw (Connecting Rod)
228	**691681**	Screw (Bearing Support)
571	**291672**	Support-Bearing **------- Note -----** **394178** Support-Bearing Used on Type No(s). 0528, 0529, 0530, 0614, 0621, 0772, 0774, 0775, 0776, 0778, 0783, 0784, 0792, 0799, 0800, 1139, 1147, 1148, 1153, 1156, 1162, 1163, 1167, 1173, 2528, 2529, 2530, 2550.
593A	**690268**	Gasket-Bearing Support (.015" Thick) **------- Note -----** **27374** Gasket-Bearing Support (.005" Thick) **27375** Gasket-Bearing Support (.009" Thick)

Not For Reproduction

Piston, Connecting Rod, Bearing Support

REF NO	PART NO	QTY	DESCRIPTION
3	391086S		SEAL, Oil -(Magneto Side)
25	299087		PISTON ASSEMBLY -(.020 Oversize)
25	792361		PISTON ASSEMBLY -(Standard)
26	792362		SET, Ring -(Standard)
26	792364		SET, Ring -(.020 Oversize)
27	691073		LOCK, Piston Pin
28	294681		PIN, Piston -(.005 Oversize)
28	298401		PIN, Piston -(Standard)
29	299080		ROD, Connecting -(Standard)
29	390305		ROD, Connecting -(.020 Undersize)
30	691726		DIPPER, Connecting Rod
31	690396		LOCK, Rod Screw
32	691765		SCREW -(Connecting Rod)
228	691681		SCREW -(Bearing Support)
593A	690268		GASKET, Bearing Support -(.015)
593A	27375		GASKET, Bearing Support -(.009)
593A	27374		GASKET, Bearing Support -(.005)

Not For Reproduction

Regulator, V-Belt, Bracket

Mfg. No: 243431-0755-99

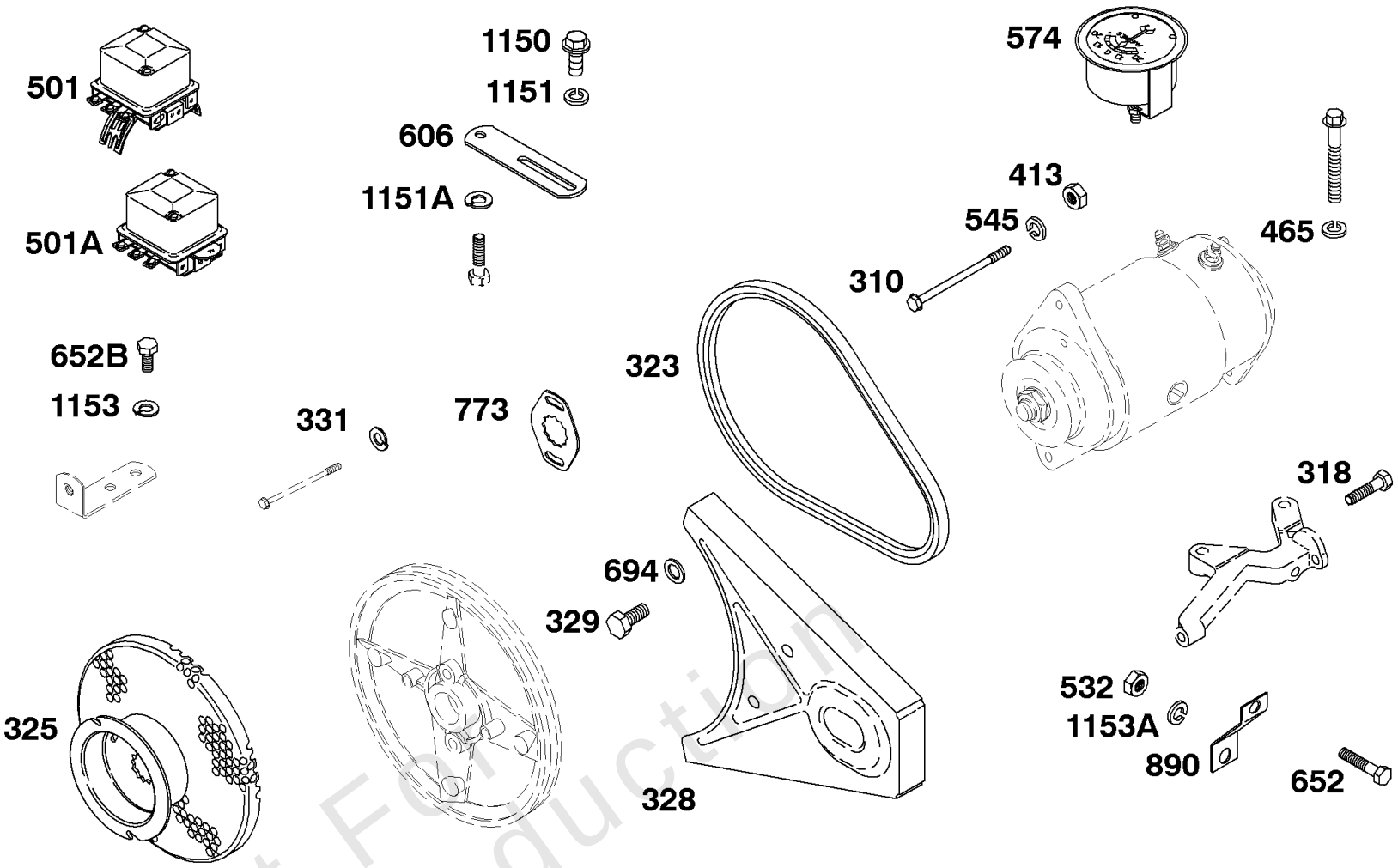

Not For Reproduction

REF. NO.	PART NO.	DESCRIPTION
310	**691614**	Bolt (Starter Motor)
318	**690303**	Screw (Mounting Bracket)
323	**68878**	Belt-Vee (High Position Mount) (36 3/4" Length) Used on Type No(s). 0118, 0147, 0159, 0186, 0618.
		------- Note -----
		68898 Belt-Vee (Low Position Mount) (35 3/4" Length) Used on Type No(s). 0656, 0722.
		280032 Belt-Vee (High Position Mount) Used on Type No(s). 0148, 0193.
325	**299308**	Pulley-Rope Starter
328	**221531**	Guard-Belt
329	**692198**	Screw (Belt Guard)
331	**691075**	Washer (Booster Fan)
413	**691105**	Nut (Starter Motor)
465	**92268**	Washer (Mounting Bracket)
501	**297196**	Regulator (Delco Remy Number 1119577)
501A	**295924**	Regulator (Delco Remy Number 1118988)
532	**691105**	Nut (Mounting Bracket)
545	**691075**	Washer Set (Starter Motor)
574	**295158**	Ammeter (Stewart Warner Number 357-W)
606	**221442**	Strap-Adjusting
652	**693972**	Screw (Support Bracket)
652B	**91468**	Screw (Support Bracket)
694	**220863**	Washer (Belt Guard)
773	**690265**	Retainer
890	**221472**	Bracket-Support
1150	**691058**	Screw (Adjusting Strap)
1151	**690282**	Washer (Adjusting Strap)
1151A	**691075**	Washer (Adjusting Strap)
1153	**90832**	Washer (Support Bracket)
1153A	**691075**	Washer (Support Bracket)

Copyright © Briggs & Stratton. All Rights reserved

Regulator, V-Belt, Bracket

REF NO	PART NO	QTY	DESCRIPTION
310	691614		SCREW -(Starter Motor)
318	690303		SCREW -(Mounting Bracket)
325	299308		PULLEY, Rope Starter -(With Screen)
328	221531		GUARD, Belt
329	692198		SCREW -(Belt Guard)
331	691075		WASHER -(Booster Fan)
413	691105		LOCKNUT -(Starter Motor)
465	92268		WASHER -(Mounting Bracket)
501	297196		REGULATOR -(Saddle Mount)(Delco Remy Number 1119577)
501A	295924		REGULATOR -(Flat Mount)(Delco Remy No. 1118988)
532	691105		LOCKNUT -(Mounting Bracket)
545	691075		WASHER -(Starter Motor)
574	295158		AMMETER -(Stewart Warner Number 357-W)
606	221442		STRAP, Adjusting
652	693972		SCREW -(Support Bracket)
652B	91468		SCREW -(Support Bracket)
694	220863		WASHER -(Belt Guard)
773	690265		RETAINER
890	221472		BRACKET, Support
1150	691058		SCREW -(Adjusting Strap)
1151	690282		WASHER -(Adjusting Strap)
1151A	691075		WASHER -(Adjusting Strap)
1153	690371		WASHER -(Support Bracket)
1153A	691075		WASHER -(Support Bracket)

Not For Reproduction

Replacement Engine - US & Canada

REF NO	PART NO	QTY	DESCRIPTION
	2434312520	1	Replacement Engine
	260887	1	CRANKSHAFT -Add Part
	390054	1	SUPPORT, Bearing -Add Part
	260895	1	CRANKSHAFT -Remove Part
	291665	1	SUPPORT, Bearing -Remove Part
	-----		Top No-Load Speed: 3700 -Trim: 01
	-----		Service Note: Replacement engine is not available in the U. S. A. Repair with individual parts.

Not For Reproduction

Mfg. No: 243431-0755-99

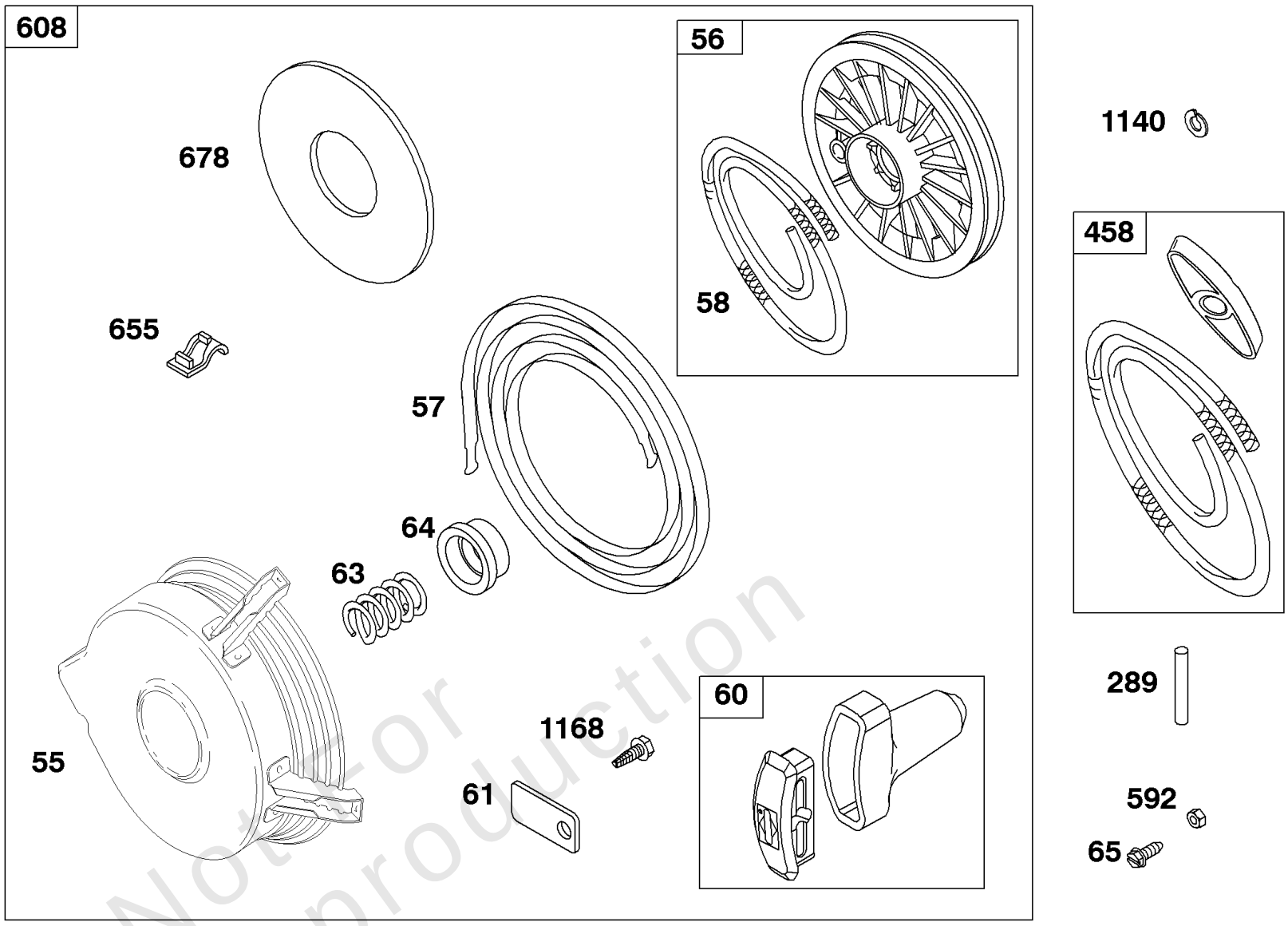

REF. NO.	PART NO.	DESCRIPTION
55	**691355**	Housing-Rewind Starter
56	**392630**	Pulley-Starter (Includes 63” Rope)
57	**490179**	Spring-Rewind Starter
58	**692188**	Rope-Starter (63” Long) (Use With Plastic Pulley) **695002** Rope-Starter (99” Long) (Cut To Required Length) **------- Note -----** **66564** Rope-Starter (63” Long) (Use With Metal Pulley) **66574** Rope-Starter (99” Long) (Cut to Required Length)
60	**490652**	Grip-Starter Rope
61	**68848S**	Bumper-Starter Pulley
63	**690547**	Spring-Ratchet
64	**691920**	Adapter-Ratchet Spring **------- Note -----** **690511** Adapter-Ratchet Spring Used on Type No(s). 0561, 0624, 0733, 0734, 0735, 0736, 0737, 0738, 0739, 0744, 0746, 0749, 0754, 0757, 0761, 0762, 0766, 0768, 0770, 0797, 0801, 1131, 1136, 1139, 1141, 1145, 1146, 1151, 1154, 1156, 1159, 1160, 1164, 2541, 2561.
65	**691044**	Screw (Rewind Starter)
289	**230228S**	Pin-Starter Grip
458	**69932S**	Kit-Handle/Rope (55 1/2” Rope)
592	**230796**	Nut (Rewind Starter)
608	**691958**	Starter-Rewind
655	**221014**	Anchor-Rewind Spring
678	**490817**	Spacer-Rewind
1140	**690286**	Washer (Rewind Starter)
1168	**93254**	Screw (Starter Pulley Bumper)

Not for Reproduction

Copyright © Briggs & Stratton. All Rights reserved

Rewind Starter

REF NO	PART NO	QTY	DESCRIPTION
55	691355		HOUSING, Rewind Starter
56	392630		PULLEY, Starter -(63 Rope)
57	490179		SPRING-REWIND STR
58	66564		ROPE, Starter -(63)(Use With Metal Pulley)
58	66574		ROPE, Starter -(99)(Cut to Required Length)
58	692188		ROPE, Starter -(63)(Use With Plastic Pulley)
58	695002		ROPE, Starter -(99)(Cut to Required Length)
60	490652		GRIP-STARTER ROPE
61	68848S		BUMPER, Starter Pulley
63	690547		SPRING, Ratchet
64	691920		ADAPTER, Ratchet Spring
65	691044		SCREW -(Rewind Starter)
289	230228S		PIN, Starter Grip
458	69932S		KIT, Handle/Rope -(55-1/2 Rope)
592	230796		NUT -(Rewind Starter)
608	691958		STARTER, Rewind
655	221014		ANCHOR, Rewind Spring
678	490817		SPACER-REWIND -(Rewind)
1140	690286		WASHER -(Rewind Starter)
1168	93254		SCREW -(Starter Pulley Bumper)

Not For Reproduction

Mfg. No: 243431-0755-99

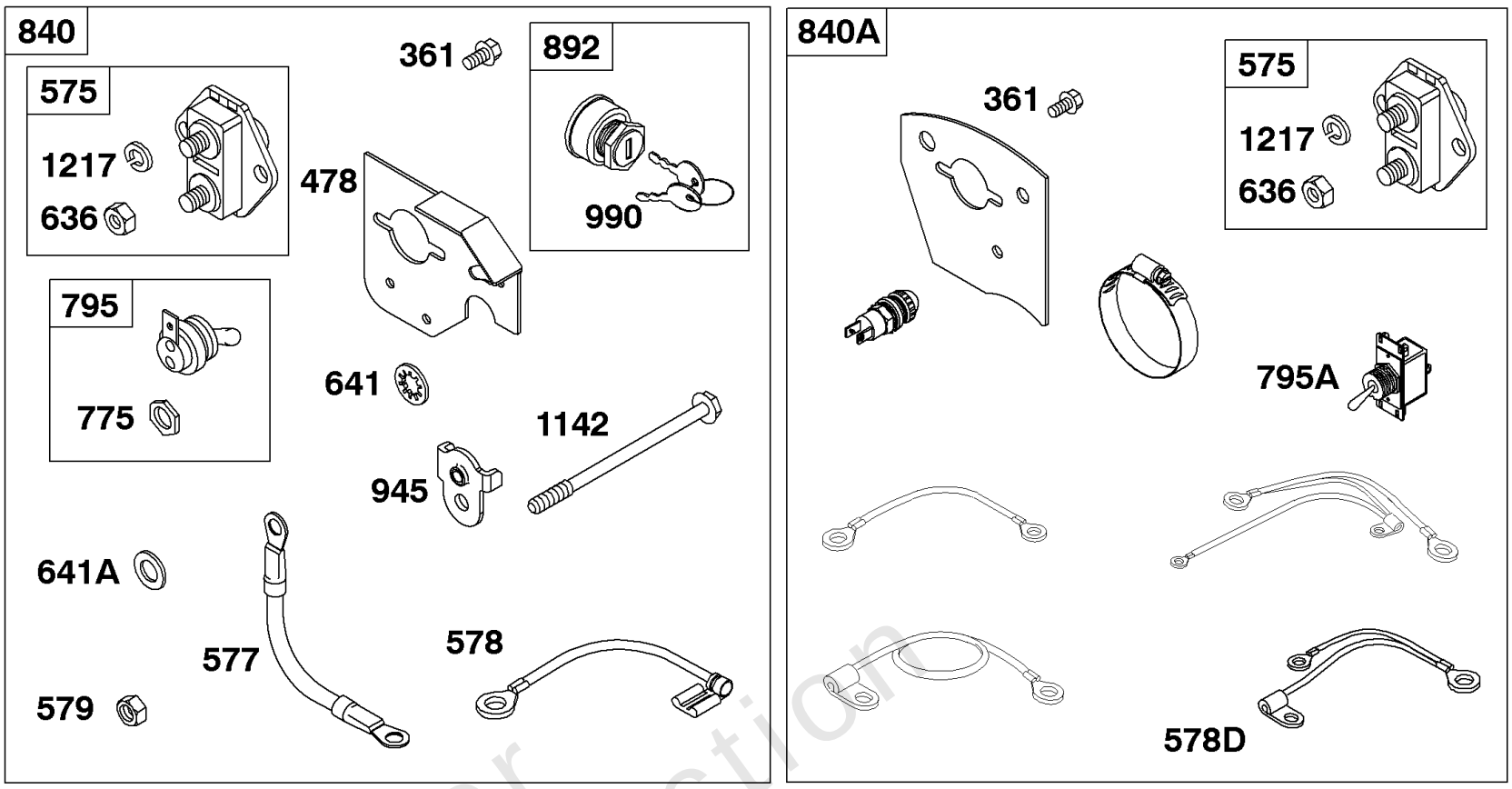

Not For Reproduction

REF. NO.	PART NO.	DESCRIPTION
356	**692390**	Wire-Stop
356A	**398808**	Wire-Stop
361	**691681**	Screw (Starting Switch)
478	**395410**	Panel
575	**692303**	Switch-Starting
577	**690630**	Cable-Starter
578	**690647**	Wire Assembly
578D	**298582**	Wire Assembly
579	**691029**	Nut (Starter Cable)
636	**696198**	Nut (Starting Switch)
641	**691075**	Washer (Starting Switch)
641A	**690282**	Washer (Starting Switch)
775	**690315**	Nut (Toggle Switch)
795	**496590**	Switch-Toggle
795A	**298590**	Switch-Toggle
840	**395408**	Kit-Panel (Toggle Switch)
		------- Note -----
		395409 Kit-Panel (Key Switch) (Used Before Code Date 81102100).
840A	**298561**	Kit-Panel
892	**392833**	Switch-Key
945	**692132**	Bracket-Starter Motor
990	**691959**	Key Set (Used Before Code Date 81102100).
1142	**692329**	Screw (Starter Motor Bracket) (5 3/8" Housing Length)
		------- Note -----
		690323 Screw (Starter Motor Bracket) (4 1/2" Housing Length)
1217	**691075**	Washer (Starting Switch)

Copyright © Briggs & Stratton. All Rights reserved

Starter Panel Kits

REF NO	PART NO	QTY	DESCRIPTION
356	692390		WIRE, Stop
356A	398808		WIRE, Stop -(Cut To Required Length)
361	691681		SCREW -(Starting Switch)
478	395410		KIT, Panel
575	692303		SWITCH-STARTING
577	690630		CABLE, Starter
578	690647		WIRE ASSEMBLY
578D	298582		WIRE ASSEMBLY
579	691029		NUT -(Starter Cable)
636	696198		NUT -(Starting Switch)
641	691075		WASHER -(Starting Switch)
641A	690282		WASHER -(Starting Switch)
775	690315		NUT -(Toggle Switch)
795	496590		SWITCH, Toggle
795A	298590		SWITCH, Toggle
840	395408		KIT, Panel -(Toggle Switch)
840	395409		KIT, Panel -(Key Switch) -Used Before Code Date 81102100
840A	298561		KIT, Panel
892	392833		SWITCH, Key
945	692132		BRACKET, Starter Motor
990	691959		SET, Key -Used Before Code Date 81102100
1142	690323		SCREW -(Starter Motor Bracket) (4 1/2" Housing Length)
1142	692329		BOLT -(Starter Motor Bracket) (5-3/8 Housing)
1217	691075		WASHER -(Starting Switch)

Not For Reproduction

Valves, Camshaft

Mfg. No: 243431-0755-99

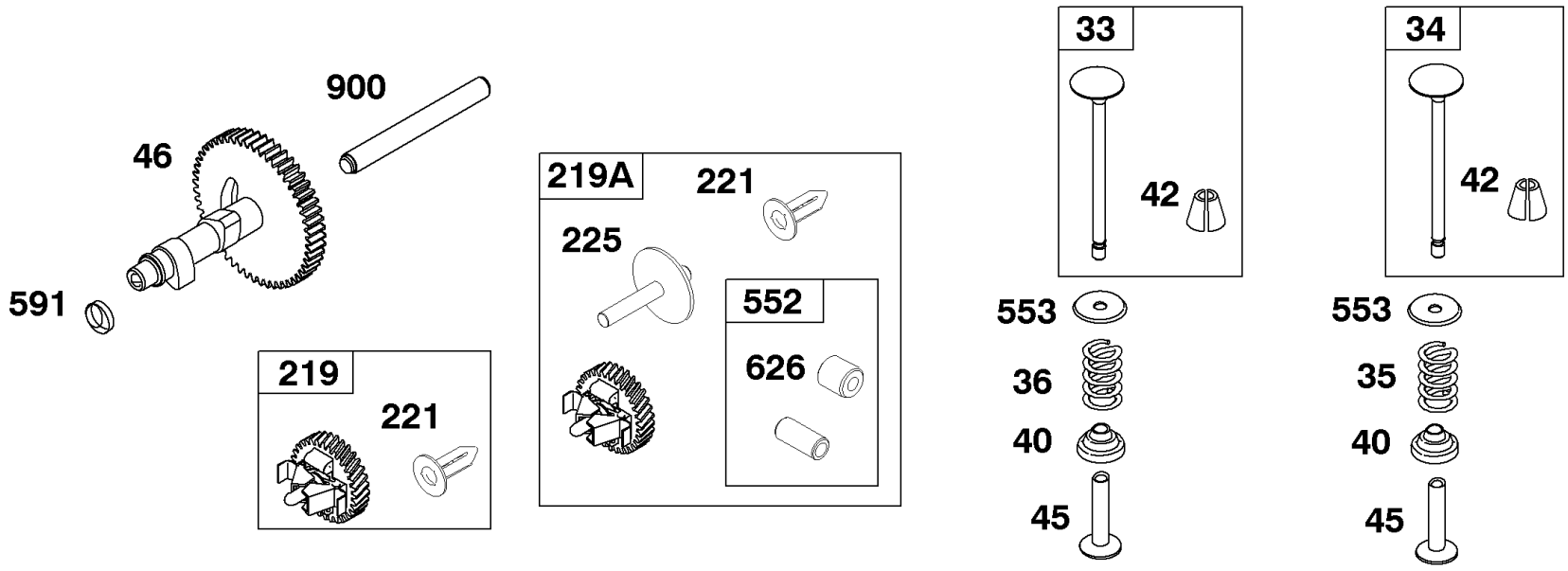

REF. NO.	PART NO.	DESCRIPTION
33	**394436**	Valve-Exhaust
34	**394434**	Valve-Intake
35	**691597**	Spring-Valve (Intake)
36	**691597**	Spring-Valve (Exhaust)
40	**691939**	Retainer-Valve **------- Note -----** **690274** Retainer-Valve Used on Type No(s). 2550.
42	**494553**	Keeper-Valve **------- Note -----** **68283** Keeper-Valve (Used Before Code Date 81062410).
45	**691594**	Tappet-Valve
46	**211335**	Camshaft
219	**393720**	Gear-Governor
219A	**291192**	Gear-Governor (Used Before Code Date 78062000).
221	**841026**	Cup-Governor
225	**691357**	Shaft-Governor Gear
552	**393666**	Bushing-Governor Crank
553	**690269**	Retainer-Valve Spring
591	**691070**	Plug-Camshaft Used on Type No(s). 1133, 1135, 1137, 1170, 1172, 1173, 1174, 2524, 2540.
626	**690512**	Spacer-Governor Crank
900	**691071**	Shaft-Gear

Not For Reproduction

Copyright © Briggs & Stratton. All Rights reserved

Valves, Camshaft

REF NO	PART NO	QTY	DESCRIPTION
33	394436		VALVE, Exhaust
34	394434		VALVE, Intake
35	691597		SPRING, Valve -(Intake)
36	691597		SPRING, Valve -(Exhaust)
40	691939		RETAINER, Valve -(Exhaust)
42	494553		KEEPER, Valve -(Exhaust)
42	68283		RETAINER, Valve -Used Before Code Date 81062400
45	691594		TAPPET, Valve
46	211335		CAMSHAFT
219	393720		GEAR, Governor
219A	291192		GEAR, Governor -Used Before Code Date 78062000
221	841026		CUP, Governor
225	691357		SHAFT, Governor Gear
552	393666		BUSHING, Governor Crank
553	690269		RETAINER, Valve
626	690512		SPACER -(Governor Lever)
900	691071		SHAFT, Gear

Not For Reproduction

Copyright © Briggs & Stratton. All Rights reserved

Copyright © Briggs & Stratton. All Rights reserved