Parts Manual

Mfg. No: 233431-0166-99

Copyright © Briggs & Stratton. All Rights reserved

22-Jun-2026

Model Components

Page

Blower Hsg,Rewind Assemblies. 4
Carb,FuelTank,A/C,Electrical. 8
Cylinder,Gear Case,Piston. 16
Electric Starters. 26
Replacement Engine - US & Canada. 30

Not For Reproduction

Copyright © Briggs & Stratton. All Rights reserved

Mfg. No: 233431-0166-99

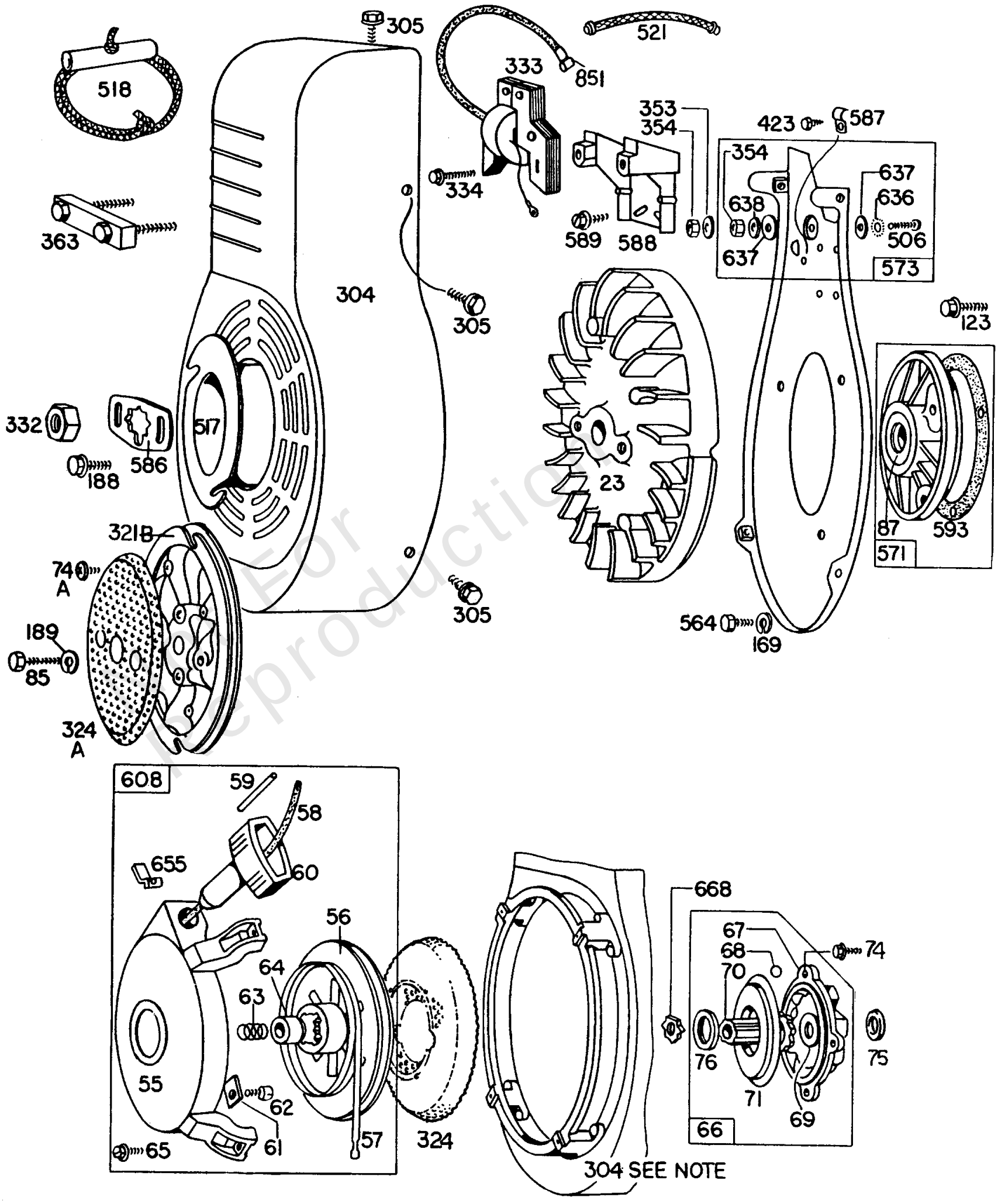

Not For Reproduction

Blower Hsg,Rewind Assemblies

REF NO	PART NO	QTY	DESCRIPTION
23	298975		FLYWHEEL
55	298402		HOUSING, Rewind Starter
55	392589		HOUSING, Rewind Starter -Uses: 90356 Nut-Hex.
56	392630		PULLEY, Starter -(63 Rope) If longer Rope is required, Order Rope No. 66894 and cut to length.
57	294303		SPRING, Rewind Starter
58	66564		ROPE, Starter -(63 Rope) If longer Rope is required, Order Rope No. 66574 and cut to length.
58	66884		ROPE, Starter -(Cut To Required Length) If longer Rope is required, Order Rope No. 66894 and cut to length.
59	230228		PIN, Starter Grip
60	66728		GRIP, Starter Rope
61	68848		BUMPER, Starter Pulley
62	93254		SCREW -(Pulley)
63	260414		SPRING, Ratchet
64	230543		ADAPTER, Ratchet Spring
65	93686		SCREW -(10-32 X 5/8)
66	298798		CLUTCH, Starter -(Rewind Starter)
67	212132		HOUSING, Clutch
68	63770		BALL, Clutch
69	66718		WASHER -(1-1/16 O.D. X 17/32 I.D.) (1 1/16 O.D. X 17/32 I.D.)
70	298799		RATCHET, Clutch -(engine W/Ring Gear on FW equipped for Elec Start)
71	221653		WASHER
74A	93808		SCREW
74	93042		SCREW
75	93824		WASHER -(Spring)
76	68238		SEAL, Ratchet
85	91386		SCREW -(2)
87	391086		SEAL, Oil -(Magneto Side)
123	93415		SCREW -(1/4-20 X 3/4)
169	90832		SCREW -(Blower Housing)
188	93535		SCREW -(5/16-18 X 3/4)
189	90366		WASHER
304	291407		HOUSING, Blower
305	93158		SCREW -(1/4-20 X 5/8)
321B	211555		FAN, Booster
324A	221851		SCREEN, Rotating
324	220802		SCREEN, Rotating -(Mounted To Flywheel)
324	220803		SPACER

Not For Reproduction

Footnotes:

Used to Mount Valve Cover

Copyright © Briggs & Stratton. All Rights reserved

Mfg. No: 233431-0166-99

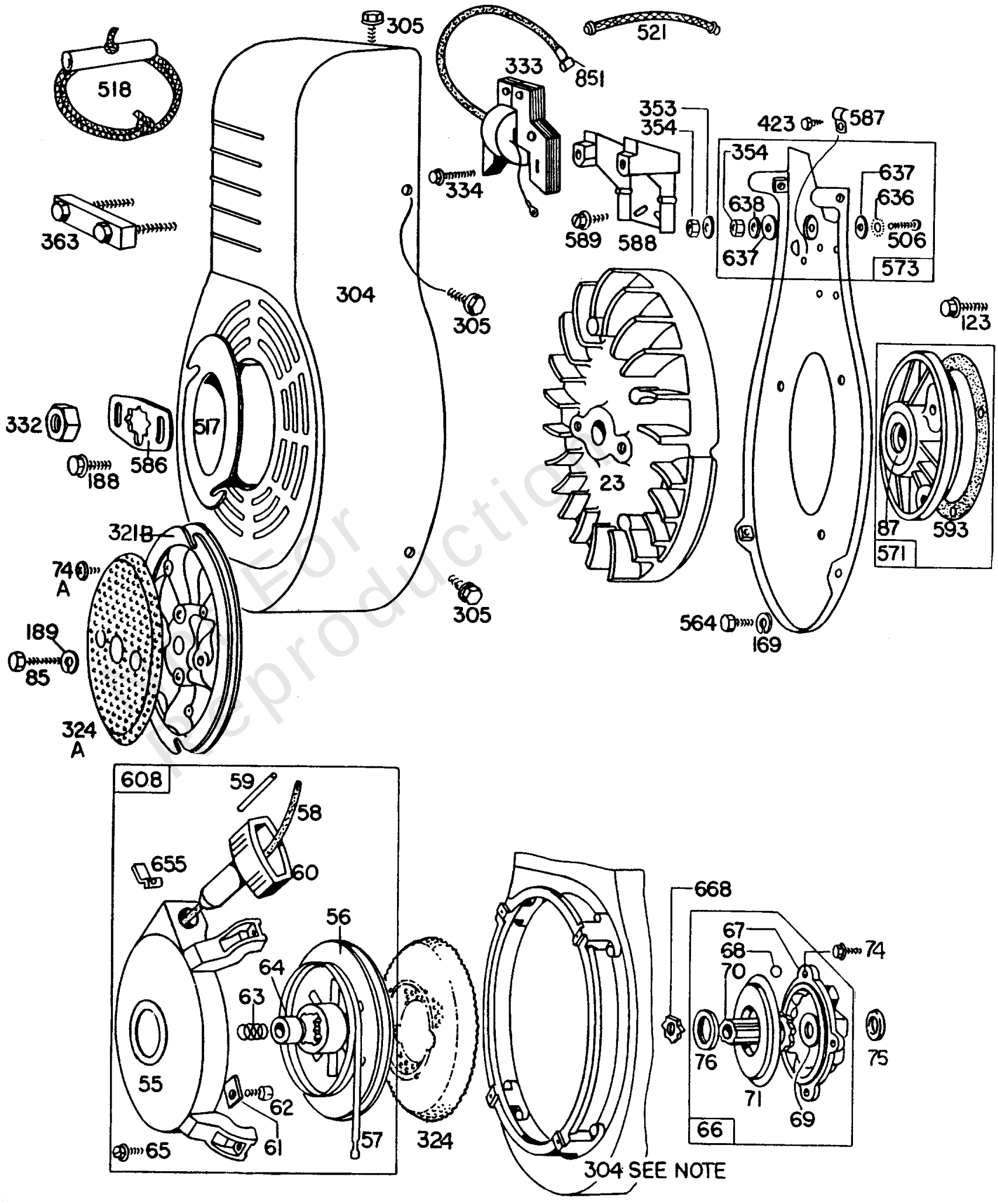

Not For Reproduction

Blower Hsg,Rewind Assemblies

REF NO	PART NO	QTY	DESCRIPTION
324	230397		SPACER -(4)
324	392349		SCREEN, Rotating
324	93415		SCREW -(1/4-20 X 3/4)
332	230674		NUT
333	298968		ARMATURE, Magneto -(Breaker Ignition)
334	93381		SCREW
353	92791		WASHER
354	90576		NUT -(Ground Terminal)
363	19203		PULLER, Flywheel
423	93410		SCREW
506	90200		SCREW -(8-32 X 1/2)
517	22809		PULLEY, Rope Starter
518	69932		GRIP, Starter Rope
521	291508		SHIELD, Protective
564	92980		SCREW -(1/4-20 X 1/2)
571	291672		SUPPORT, Bearing -(Ball Bearing)
573	298159		PLATE, Back
586	22906		RETAINER
587	221340		CLAMP
588	211440		BRACKET, Armature
589	93473		SCREW -Bracket to Cylinder Mounting Sem
608	298340		STARTER, Rewind
636	92864		WASHER
637	66154		WASHER -(Fiber)
638	26404		WASHER
655	221014		ANCHOR, Rewind Spring
668	260647		SPACER -(Used Between End Of Ratchet And Starter Pulley)
851	221798		TERMINAL, Spark Plug

Not For Reproduction

Footnotes:

Used to Mount Valve Cover

Copyright © Briggs & Stratton. All Rights reserved

Mfg. No: 233431-0166-99

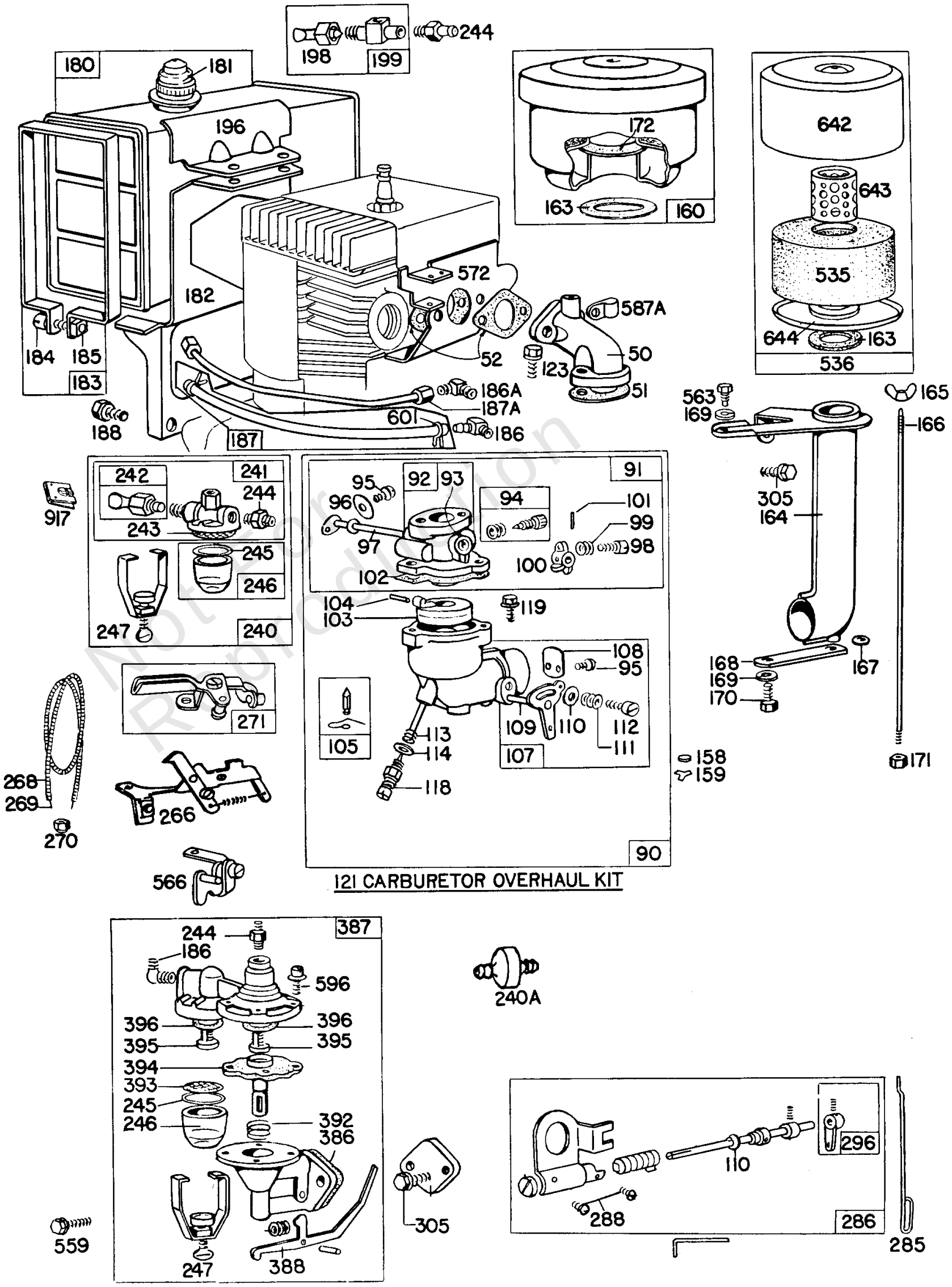

Copyright © Briggs & Stratton. All Rights reserved

REF NO	PART NO	QTY	DESCRIPTION
50	21920		MANIFOLD, Intake
51	270684		GASKET, Intake -Included in Carburetor Overhaul Kit-Part No. 291763. Included in Gasket Set-Part No. 291728
52	27381		GASKET, Intake -Included in Gasket Set-Part No. 291728
90	291746		CARBURETOR
91	291655		BODY, Upper Carburetor
92	99375		BODY, Upper Carburetor
93	23108		BUSHING, Throttle Shaft
94	292681		VALVE, Idle Mixture -Included in Carburetor Overhaul Kit-Part No. 291763
95	93499		SCREW -(Throttle Valve)
96	62940		VALVE, Throttle
97	291300		SHAFT, Throttle
98	91920		SCREW -(8-32 X 5/8)
99	26157		SPRING, Compression
100	61967		STOP, Throttle
101	93043		PIN, Shaft
102	27034		GASKET, Carburetor Body -Included in Carburetor Overhaul Kit-Part No. 291763
103	99333		FLOAT, Carburetor
104	230896		PIN, Float Hinge -Included in Carburetor Overhaul Kit-Part No. 291763
105	299096		KIT, Needle/Seat -Included in Carburetor Overhaul Kit-Part No. 291763
107	291745		BODY, Lower Carburetor
108	22954		VALVE, Choke
109	291776		SHAFT, Choke -(Automatic Choke)
110	62899		WASHER -(Thermostat)
111	26155		SPRING, Friction
112	23123		SCREW
113	390395		NOZZLE, Carburetor -Included in Carburetor Overhaul Kit-Part No. 291763
114	68667		WASHER -(Viton Seat) Included in Carburetor Overhaul Kit-Part No. 291763
118	391213		VALVE, Float Needle -Uses: 292226 Retainer Assy.-Needle Valve 68677 Packing-Needle Valve
118	99525		VALVE, High Speed -Included in Carburetor Overhaul Kit-Part No. 291763
119	93496		SCREW -(10-32 X 5/8)
121	291763		KIT, Carburetor Overhaul
123	93415		SCREW -(1/4-20 X 3/4)
158	27590		PLUG, Carburetor Filter/Drain
159	220521		RETAINER, Carburetor Drain
160	393858		CLEANER, Air
163	67247		GASKET, Air Cleaner -Included in Gasket Set-Part No. 291728

Footnotes:

Used to Mount Valve Cover
Uses: 66788 Tube-Breather

Not For Reproduction

Copyright © Briggs & Stratton. All Rights reserved

Mfg. No: 233431-0166-99

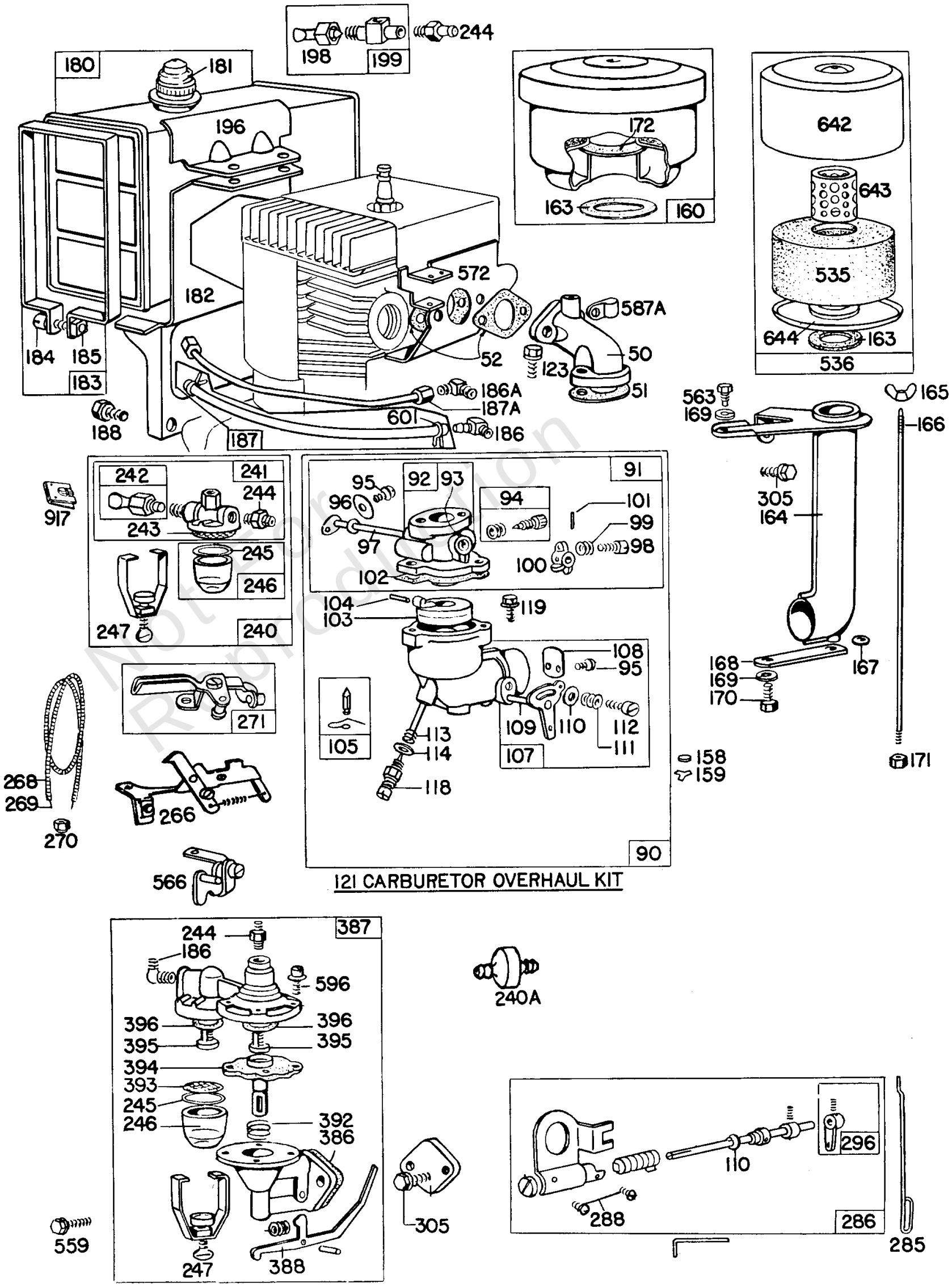

Not for Reproduction

Copyright © Briggs & Stratton. All Rights reserved

REF NO	PART NO	QTY	DESCRIPTION
164	291462		ELBOW, Intake -Used Before Code Date 6608091
164	294632		ELBOW, Intake -Used Before Code Date 6608091
164	299504		ELBOW, Intake -Used After Code Date 6608081
165	93453		NUT
166	297749		STRAP/STUD, Air Cleaner Mounting -(Air Cleaner)
167	65978		SEAL, O-Ring -(Needle Valve)
168	222707		STUD -(Stud supplied by Equipment Manufacturer)
169	90832		SCREW -(Blower Housing)
170	91468		SCREW -(1/4-20 X 3/8)
171	92129		NUT -(1/4-28)
172	27401		GASKET, Air Cleaner -(Air Cleaner)
180	291488		TANK, Fuel -(6 Quart)
180	293024		TANK, Fuel -(8 Quart) Uses: 92958 Plug
180	293600		TANK, Fuel -(6 Quart) Uses: 92958 Plug
181	392301		CAP, Fuel Tank
182	22813		BRACKET, Fuel Tank -(8 Quart) (Remote Mount Only)
183	291490		STRAP, Fuel Tank -(6 Quart)
184	91257		SCREW -(1/4-20 X 1-1/2)
185	90970		NUT -(1/4-20)
186A	63377		CONNECTOR, Hose -(Metal Fuel Pipe)
186	67218		CONNECTOR, Hose
187A	291703		LINE, Fuel -Used between Carburetor and Fuel Pump
187	292370		VALVE, Fuel Shut Off
187	293059		CAP, Fuel Tank
187	293646		LINE, Fuel -(Flexible Line)
187	296004		LINE, Fuel -(Cut To Required Length)
187	93037		FITTING, Fuel -(At Lower Pipe and Valve) (90 degrees) (Between Fuel Pipe and Valve)
188	93535		SCREW -(5/16-18 X 3/4)
196	22907		BRACKET, Fuel Tank -(8 Quart) (Remote Mount Only)
198	293934		VALVE, Fuel Shut Off
199	297563		OUTLET, Tank

Not For Reproduction

Footnotes:

Used to Mount Valve Cover
Uses: 66788 Tube-Breather

Copyright © Briggs & Stratton. All Rights reserved

Mfg. No: 233431-0166-99

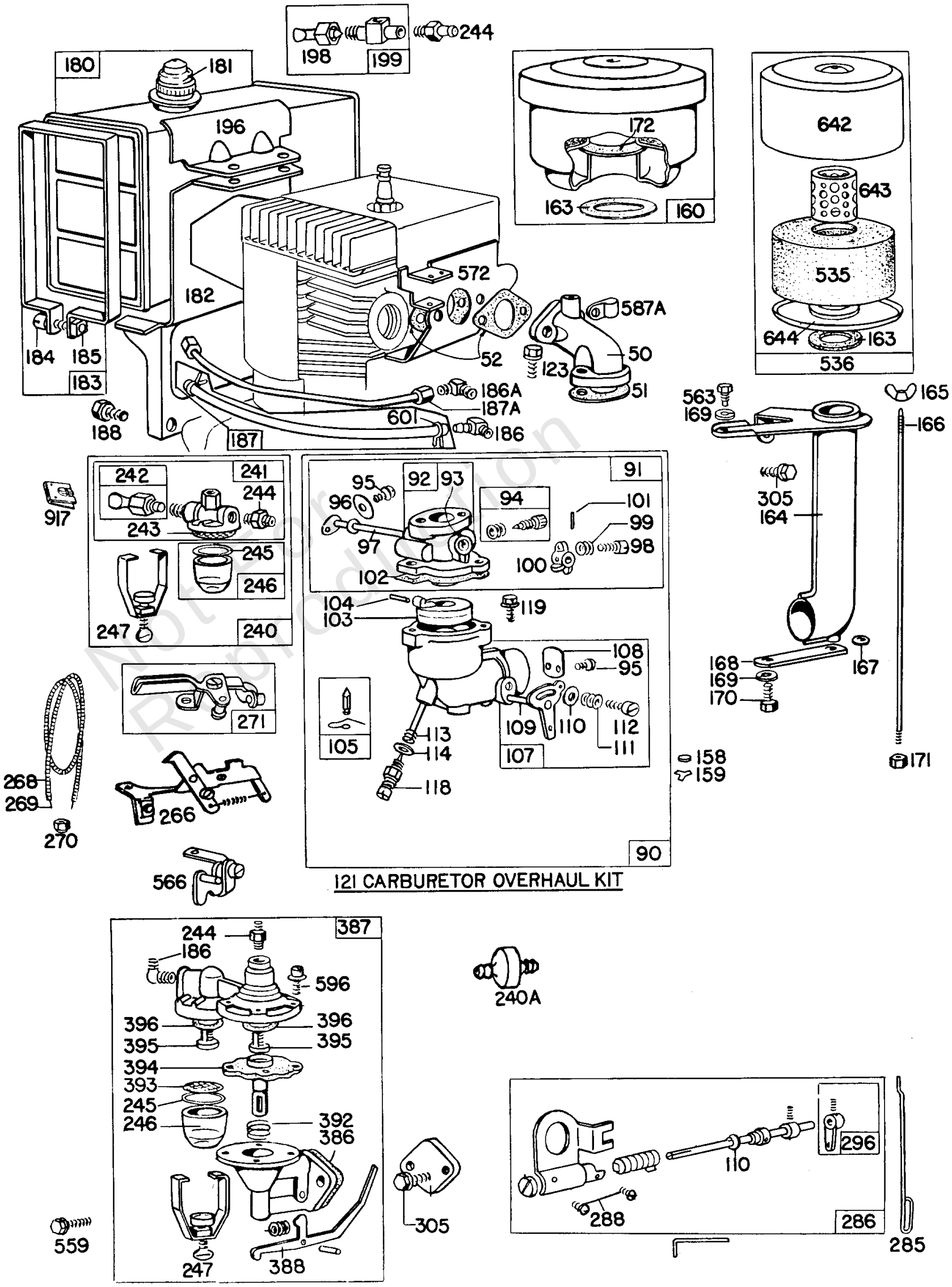

Copyright © Briggs & Stratton. All Rights reserved

REF NO	PART NO	QTY	DESCRIPTION
240A	394358		FILTER, Fuel -(Fuel Pump)
240	393169		STRAINER, Fuel -Used with Flexible and Metal Fuel Pipe.
241	296005		COVER, Fuel Filter -Used with Flexible Fuel Pipe
241	99909		COVER, Fuel Filter -(Metal Fuel Pipe) Used with Metal Fuel Pipe
242	295913		VALVE, Fuel Shut Off
243	22547		STRAINER, Fuel
244	230318		CONNECTOR, Hose -Used with Flexible Fuel Pipe
244	231238		CONNECTOR, Hose -(Metal Fuel Pipe) Used with Metal Fuel Pipe
245	68477		GASKET, Fuel Bowl -Included in Gasket Set-Part No. 291728
246	298683		BOWL, Fuel Filter
247	99665		YOKE, Bowl
266	291460		CONTROL, Throttle -(Disc Type)
266	392150		CONTROL, Throttle -Uses: 261322 Spring-Return
268	65616		CASING, Control Wire -(Cut To Required Length)
269	260769		WIRE, Control -(Cut To Required Length) If longer wire is required, specify length in inches; if shorter wire is needed, Order No. 26633 and cut to required length.
270	63426		NUT -(Control Wire Casing)
271	290568		LEVER, Control
285	26684		LINK, Choke
286	291445		THERMOSTAT
288	93141		SCREW -(Diaphragm Cover)
296	291044		LEVER, Actuator
305	93158		SCREW -(1/4-20 X 5/8)
386	27314		GASKET, Fuel Bowl
387	291493		PUMP, Fuel
388	220431		LEVER, Control -(Fuel Pump)
392	26588		SPRING, Pump Diaphragm
393	22740		STRAINER, Fuel
394	290622		DIAPHRAGM, Carburetor
395	290623		SEAT, Valve
396	66204		GASKET, Fuel Bowl
535	270093		FILTER, Air Cleaner Foam
536	297869		CLEANER, Air
559	93294		SCREW -(5/8)
563	93158		SCREW -(1/4-20 X 5/8)
566	99458		KIT, Idle Speed -Uses: 92747 Screw-Sem (Mounting)

Not For Reproduction

Footnotes:

Used to Mount Valve Cover
Uses: 66788 Tube-Breather

Copyright © Briggs & Stratton. All Rights reserved

Mfg. No: 233431-0166-99

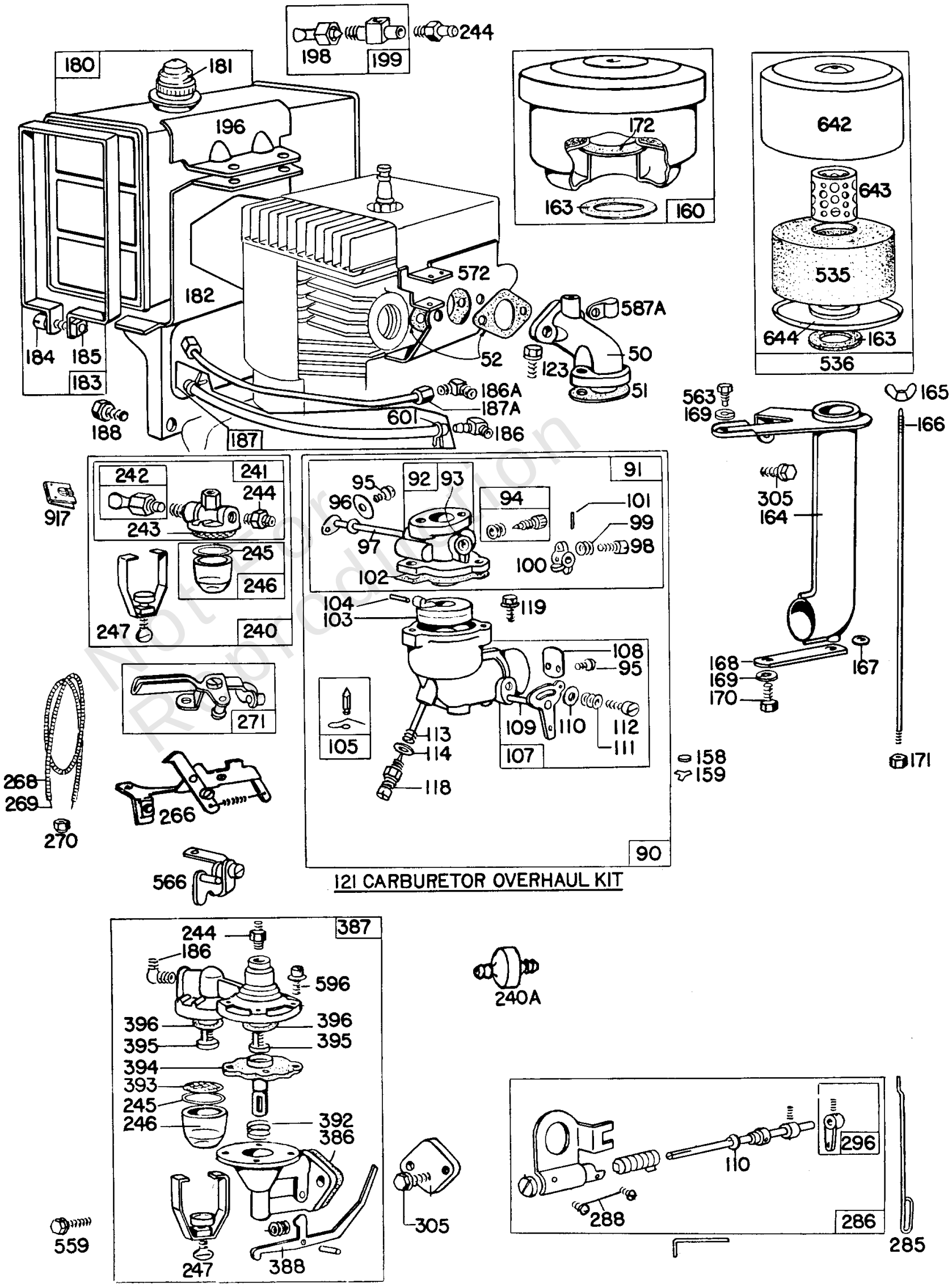

Not for Reproduction

Copyright © Briggs & Stratton. All Rights reserved

REF NO	PART NO	QTY	DESCRIPTION
572	291871		GUIDE, Air
587A	220509		CLIP, Wire
596	93347		SCREW -(Throttle) (Fuel Pump)
601	93053		CLAMP, Hose -(Green)
642	221468		COVER, Air Cleaner
643	280001		SUPPORT, Foam Element
644	221466		BASE, Air Cleaner
917	223271		VALVE, Handle Shutoff

Not For Reproduction

Footnotes:

Used to Mount Valve Cover
Uses: 66788 Tube-Breather

Copyright © Briggs & Stratton. All Rights reserved

Mfg. No: 233431-0166-99

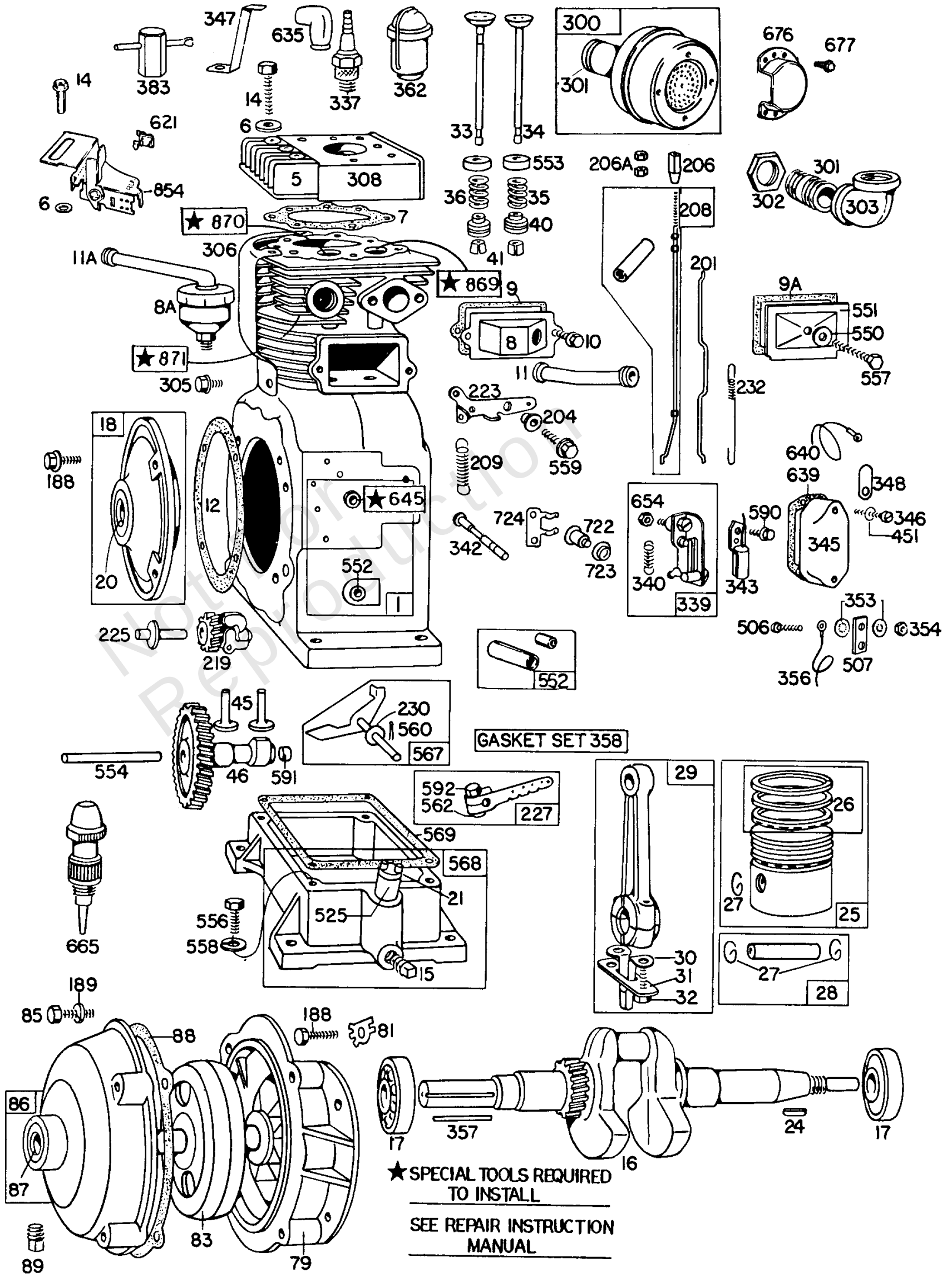

Not for Reproduction

Copyright © Briggs & Stratton. All Rights reserved

Cylinder,Gear Case,Piston

REF NO	PART NO	QTY	DESCRIPTION
1	298202		CYLINDER ASSEMBLY -Used Before Code Date 7806211
1	393668		CYLINDER ASSEMBLY -Used After Code Date 7806201
5	210580		HEAD, Cylinder
6	22963		WASHER
7	270273		GASKET, Cylinder Head -Included in Gasket Set-Part No. 291728
8A	297704		BREATHER ASSEMBLY -Used Before Code Date 6608091
8	299328		BREATHER ASSEMBLY -Used After Code Date 6608081
9A	66214		GASKET, Rocker Cover -Used Before Code Date 6608091
9	27803		GASKET, Rocker Cover -Used After Code Date 6608081
10	93394		SCREW -Used After Code Date 6608081
11A	67068		TUBE, Breather -Used Before Code Date 6608091
11	68818		TUBE, Breather -Used After Code Date 6608081
12	27350		GASKET, Crankcase -Included in Gasket Set-Part No. 291728
14	92674		SCREW -(2-7/16)
15	91084		PLUG, Oil Drain -(3/8)
16	260776		CRANKSHAFT
17	291667		BEARING, Ball
18	291665		SUPPORT, Bearing -(Ball Bearing)
20	291675		SEAL, Oil -(Crankcase Cover)
21	66768		PLUG, Oil
24	61760		KEY, Flywheel -(Breaker Ignition)
25	294676		PISTON ASSEMBLY -Used After Code Date 6608151
25	294677		PISTON ASSEMBLY -(.010 Oversize) -Used After Code Date 6608151
25	294678		PISTON ASSEMBLY -(.020 Oversize) -Used After Code Date 6608151
25	294679		PISTON ASSEMBLY -(.030 Oversize) -Used After Code Date 6608151
25	99947		PISTON ASSEMBLY -Used Before Code Date 6608161
25	99948		PISTON ASSEMBLY -(.010 Oversize) -Used Before Code Date 6608161

Not For Reproduction

Footnotes:

Used to Mount Valve Cover
For Connecting Rod with .020" Undersize Crankpin Bore-Order No. 390304
For Connecting Rod with .020" Undersize Crankpin Bore-Order No. 295362
Part No. 69925 and 29103.
(Used with Metal Air Cleaner Pipe)
Included in Gasket Set-Part No. 291728

Copyright © Briggs & Stratton. All Rights reserved

Mfg. No: 233431-0166-99

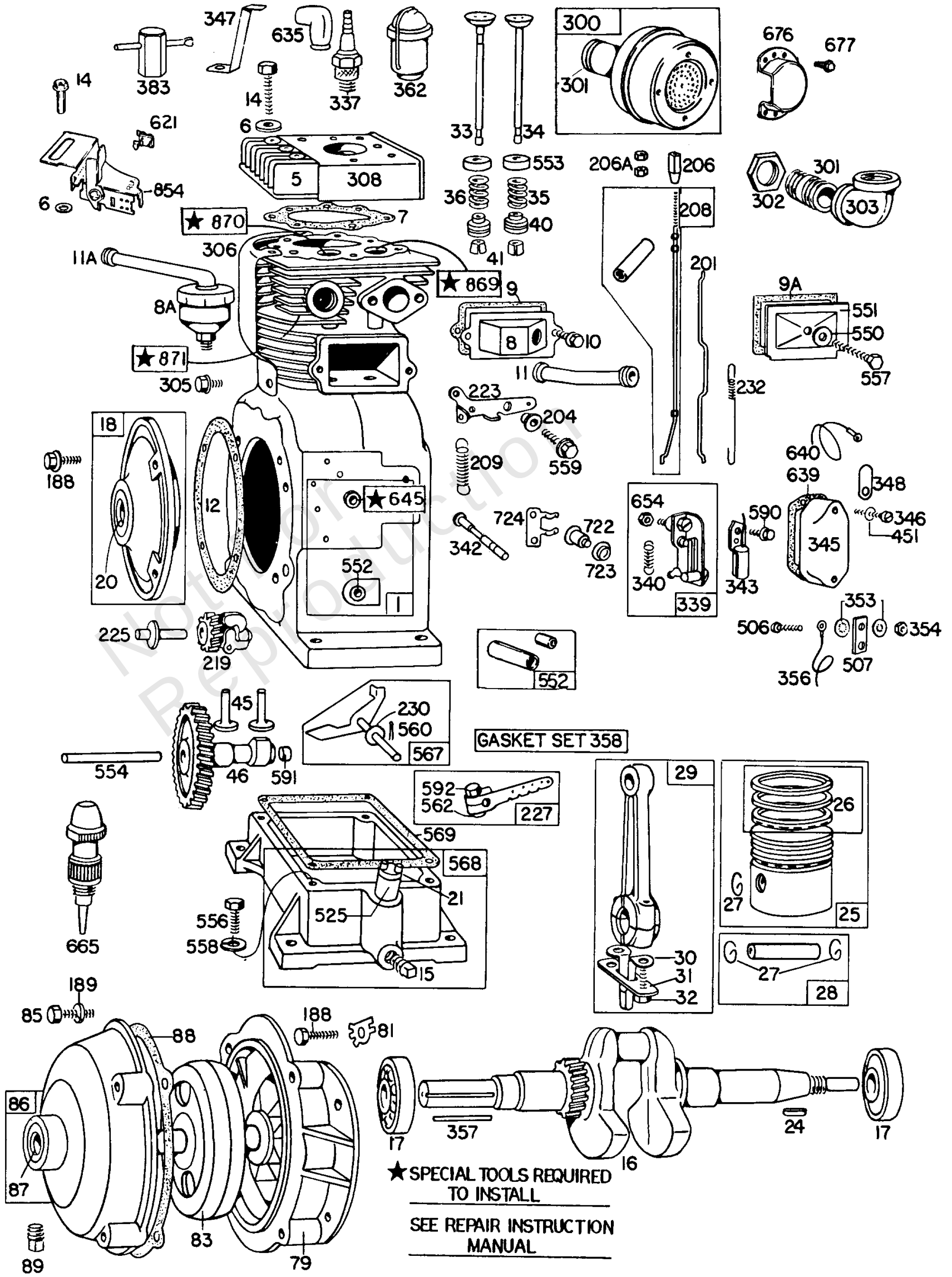

Not for Reproduction

Copyright © Briggs & Stratton. All Rights reserved

REF NO	PART NO	QTY	DESCRIPTION
25	99949		PISTON ASSEMBLY -(.020 Oversize) -Used Before Code Date 6608161
25	99950		PISTON ASSEMBLY -(.030 Oversize) -Used Before Code Date 6608161
26	292100		SET, Ring -(Standard)
26	292101		SET, Ring -(.010 Oversize)
26	292102		SET, Ring -(.020 Oversize)
26	292103		SET, Ring -(.030 Oversize)
26	298746		SET, Ring -(Standard)
27	65776		LOCK, Piston Pin -Used Before Code Date 6608161
27	68546		LOCK, Piston Pin -Used After Code Date 6608152
28	29103		PIN, Piston -(.005 Oversize) -Used Before Code Date 6608161
28	294681		PIN, Piston -(.005 Oversize) -Used After Code Date 6608151
28	298401		PIN, Piston -Used After Code Date 6608151
28	69925		PIN, Piston -Used Before Code Date 6608161
29	291647		ROD, Connecting -Used Before Code Date 6608161
29	298400		ROD, Connecting -Used After Code Date 6608151
30	220805		DIPPER, Connecting Rod
31	22946		LOCK, Rod Screw
32	230557		SCREW -(Connecting Rod)
33	261207		VALVE, Exhaust -Used Before Code Date 81082500
33	261584		VALVE, Exhaust -Used After Code Date 81082400
34	23923		VALVE, Intake -Used Before Code Date 81082500
34	261582		VALVE, Intake -Used After Code Date 81082400
35	65906		SPRING, Valve -(Intake)
36	26828		SPRING, Valve -(Exhaust)
40	292260		RETAINER, Valve -(Exhaust Valve) (Exhaust)
41	68283		RETAINER, Valve -Used Before Code Date 81082500

Not For Reproduction

Footnotes:

Used to Mount Valve Cover
For Connecting Rod with .020" Undersize Crankpin Bore-Order No. 390304
For Connecting Rod with .020" Undersize Crankpin Bore-Order No. 295362
Part No. 69925 and 29103.
(Used with Metal Air Cleaner Pipe)
Included in Gasket Set-Part No. 291728

Copyright © Briggs & Stratton. All Rights reserved

Mfg. No: 233431-0166-99

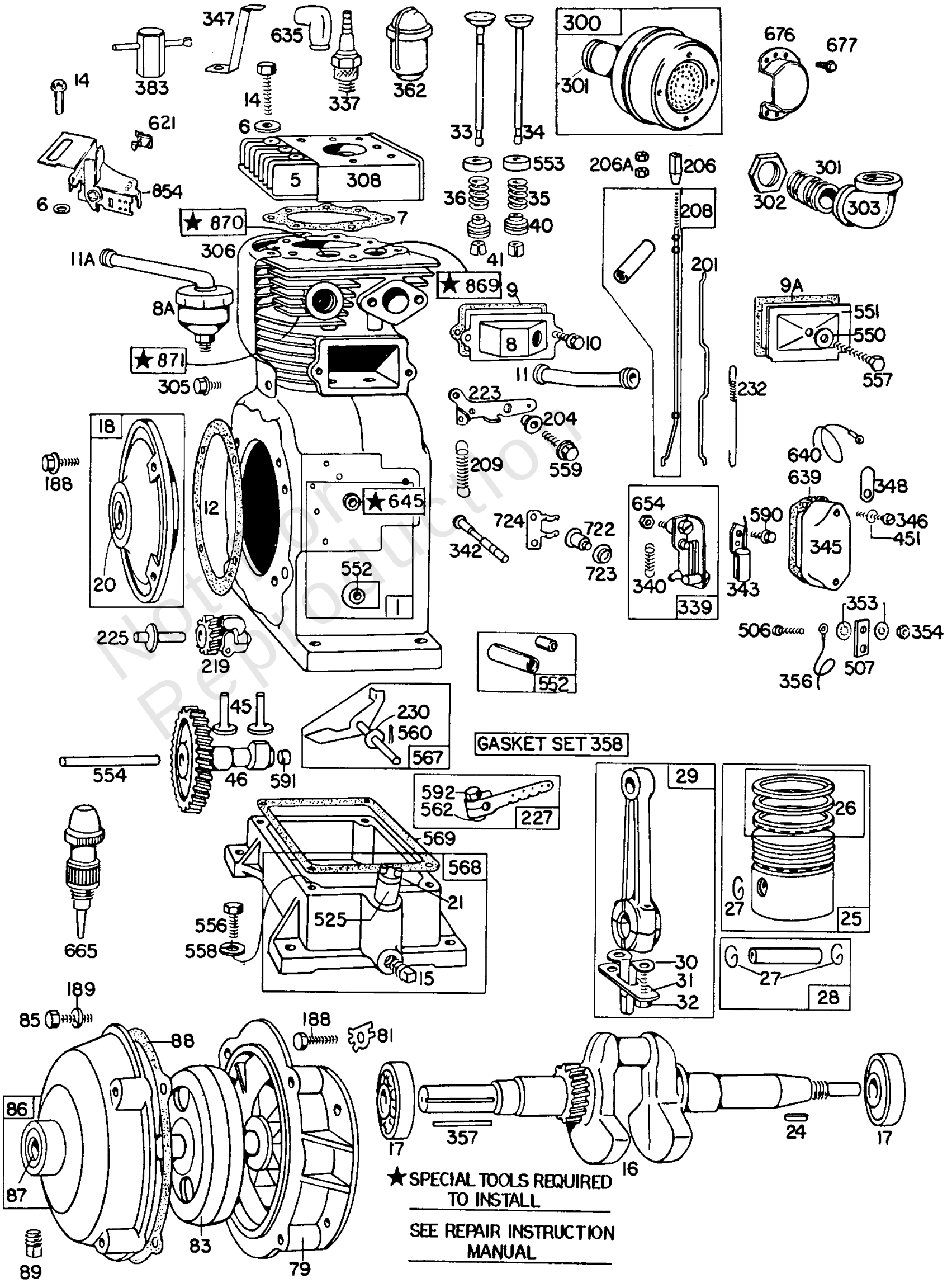

Not for Reproduction

Copyright © Briggs & Stratton. All Rights reserved

Cylinder,Gear Case,Piston

REF NO	PART NO	QTY	DESCRIPTION
41	93630		KEEPER, Valve -(2)
45	26670		TAPPET, Valve
46	211335		CAMSHAFT
79	291357		CASE, Gear Reduction
79	291712		CASE, Gear -Includes: 63382 Cup-Bearing 230012 Pin-Washer Retainer
81	220790		LOCK, Screw Head
83	291762		SHAFT, Auxiliary Drive
85	91386		SCREW -(2)
86	290574		COVER, Gear -Includes: 22723 Shim-.003 22724 Shim-.010 63899 Cup-Bearing
86	291354		COVER, Gear
87	391086		SEAL, Oil -(Magneto Side)
88	27328		GASKET, Gear Cover/Housing
89	91488		PLUG -(1/8)
188	93535		SCREW -(5/16-18 X 3/4)
189	90366		WASHER
201	26725		LINK, Throttle
204	23849		SCREW
206A	93422		NUT
206	21772		NUT, Governor Adjusting
208	393613		ROD, Governor Control
209	26764		SPRING, Governor
219	291192		GEAR, Governor -Used Before Code Date 7806211
219	393720		GEAR, Governor -Used After Code Date 7806201
225	291177		SHAFT, Governor Gear -Used Before Code Date 7806211
225	393467		SHAFT, Governor Gear -Used After Code Date 7806201
227	291365		LEVER, Governor Control
230	22826		WASHER
232	260584		SPRING/LINK, Mechanical Governor
300	299477		MUFFLER
301	91416		ELBOW, Exhaust -(1 1/2)
301	92107		PIPE, Exhaust -(4)
302	91310		LOCKNUT -(Muffler)
303	91296		ELBOW, Exhaust -(90 Degree)
305	93158		SCREW -(1/4-20 X 5/8)

Not For Reproduction

Footnotes:

Used to Mount Valve Cover
For Connecting Rod with .020" Undersize Crankpin Bore-Order No. 390304
For Connecting Rod with .020" Undersize Crankpin Bore-Order No. 295362
Part No. 69925 and 29103.
(Used with Metal Air Cleaner Pipe)
Included in Gasket Set-Part No. 291728

Copyright © Briggs & Stratton. All Rights reserved

Mfg. No: 233431-0166-99

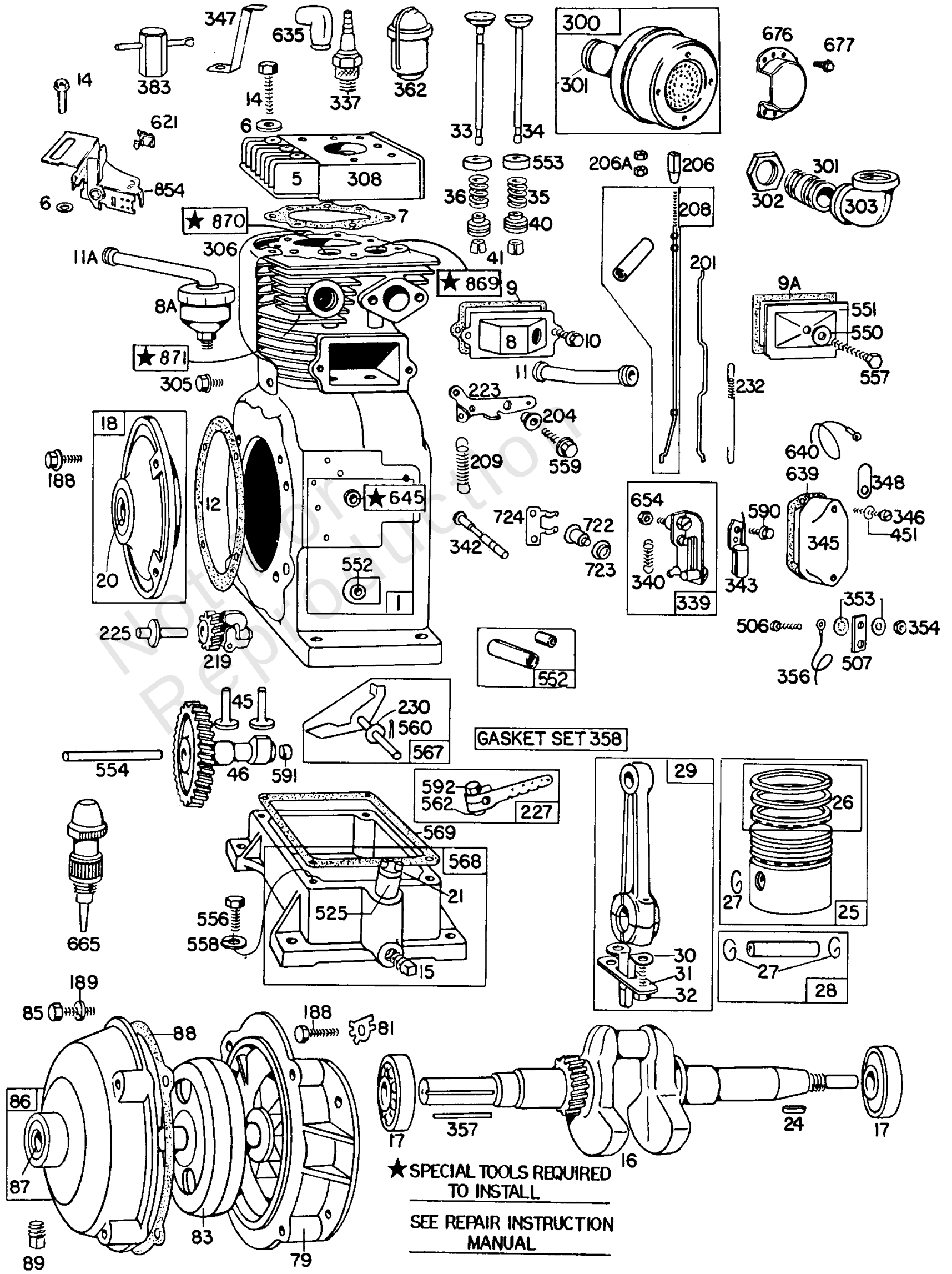

Not for Reproduction

Copyright © Briggs & Stratton. All Rights reserved

REF NO	PART NO	QTY	DESCRIPTION
306	22951		SHIELD, Cylinder
308	291866		COVER, Cylinder Head
337	293918		PLUG, Spark
337	29693		PLUG, Spark
337	298809		PLUG, Spark
339	298185		BREAKER, Ignition
340	26018		SPRING, Breaker Arm
342	298125		PLUNGER, Breaker
343	298060		CONDENSER
345	211327		COVER, Breaker
346	93400		SCREW
347	220197		SWITCH, Stop -(1-1/2 High, 38 Mm. Spark Plugs)
348	221976		SWITCH, Stop
353	92791		WASHER
354	90576		NUT -(Ground Terminal)
356	391115		WIRE, Stop
357	91540		KEY, Drive Pulley -(1/4)
358	291728		GASKET SET, Engine
362	291630		SHIELD, Spark Plug -(With Stop Switch)
383	89838		WRENCH, Spark Plug
451	90364		WASHER
506	90200		SCREW -(8-32 X 1/2)
507	66895		INSULATOR
525	230472		TUBE, Dipstick
550	22353		WASHER -(Valve Cover) -Used Before Code Date 6608091
551	22795		COVER, Valve -Used Before Code Date 6608091
552	23837		BUSHING, Governor Crank -Used Before Code Date 7806211
552	393666		BUSHING, Governor Crank -Used After Code Date 7806201
553	62222		SEAT, Valve Spring
554	66203		SHAFT, Gear
556	90887		SCREW -(3/8-16 X 1-1/4)
557	90931		SCREW -Used Before Code Date 6608091
558	92268		WASHER -(3/8 X 1/8 X 3/32)
559	93294		SCREW -(5/8)
560	93306		PIN, Cotter

Not For Reproduction

Footnotes:

Used to Mount Valve Cover
For Connecting Rod with .020" Undersize Crankpin Bore-Order No. 390304
For Connecting Rod with .020" Undersize Crankpin Bore-Order No. 295362
Part No. 69925 and 29103.
(Used with Metal Air Cleaner Pipe)
Included in Gasket Set-Part No. 291728

Copyright © Briggs & Stratton. All Rights reserved

Mfg. No: 233431-0166-99

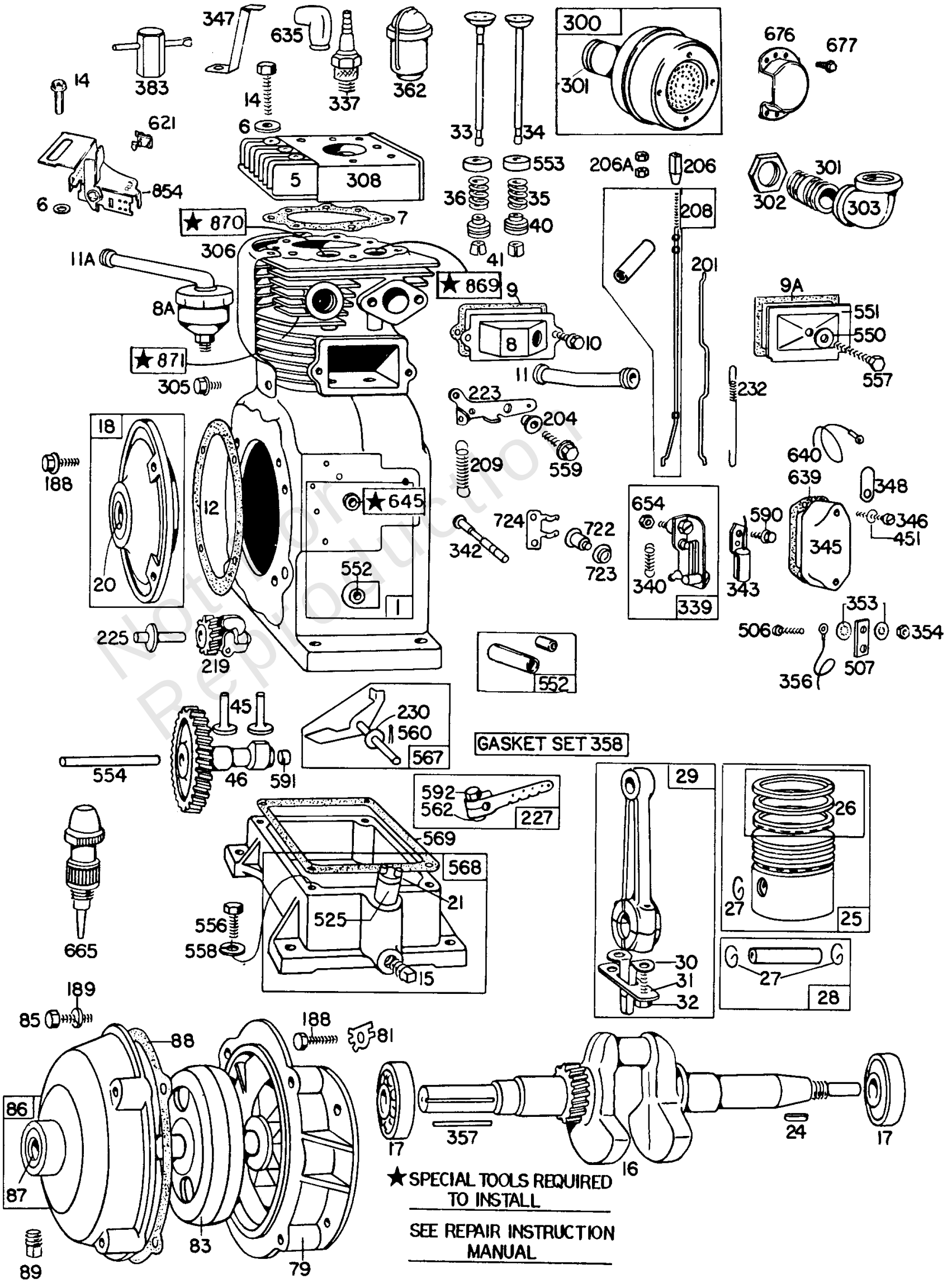

Not for Reproduction

Copyright © Briggs & Stratton. All Rights reserved

REF NO	PART NO	QTY	DESCRIPTION
562	92613		BOLT -(Governor Lever)
567	291364		CRANK, Governor
568	291404		SUMP, Engine -(Engine Base Furnished by the Equipment Mfr)
569	27351		GASKET, Crankcase -Included in Gasket Set-Part No. 291728
590	93171		SCREW
591	65932		PLUG, Camshaft
592	231082		NUT -(Governor Control)
621	297472		SWITCH, Stop
635	66538		BOOT, Spark Plug
639	270176		GASKET, Breaker Box
640	298141		WIRE, Stop
645	230775		BUSHING, Plunger
654	230783		NUT
665	298860		MINDER, Oil
676	222573		DEFLECTOR, Muffler -(Side Outlet)
677	93705		SCREW -(8-32 X 3/8)
722	68768		SEAL, Plunger
723	93516		RETAINER, Seal
724	221873		RETAINER, Seal
854	392884		BRACKET, Stopswitch
869	21880		SEAT, Valve -(Intake)
870	21880		SEAT, Valve -(Intake)
871	-----		No Nomenclature -231218 or 230655 See Repair Manual

Not For Reproduction

Footnotes:

Used to Mount Valve Cover
For Connecting Rod with .020" Undersize Crankpin Bore-Order No. 390304
For Connecting Rod with .020" Undersize Crankpin Bore-Order No. 295362
Part No. 69925 and 29103.
(Used with Metal Air Cleaner Pipe)
Included in Gasket Set-Part No. 291728

Copyright © Briggs & Stratton. All Rights reserved

Mfg. No: 233431-0166-99

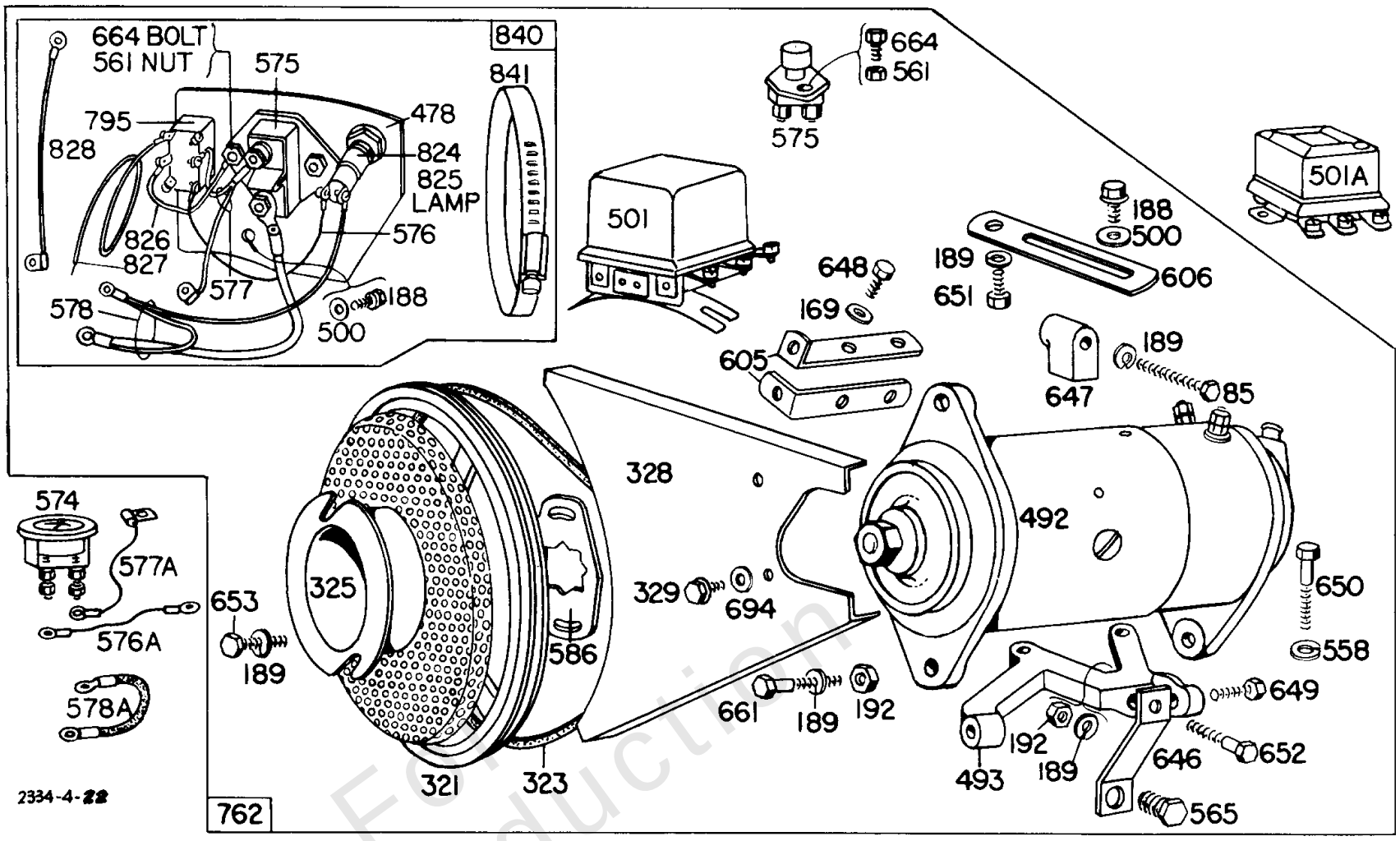

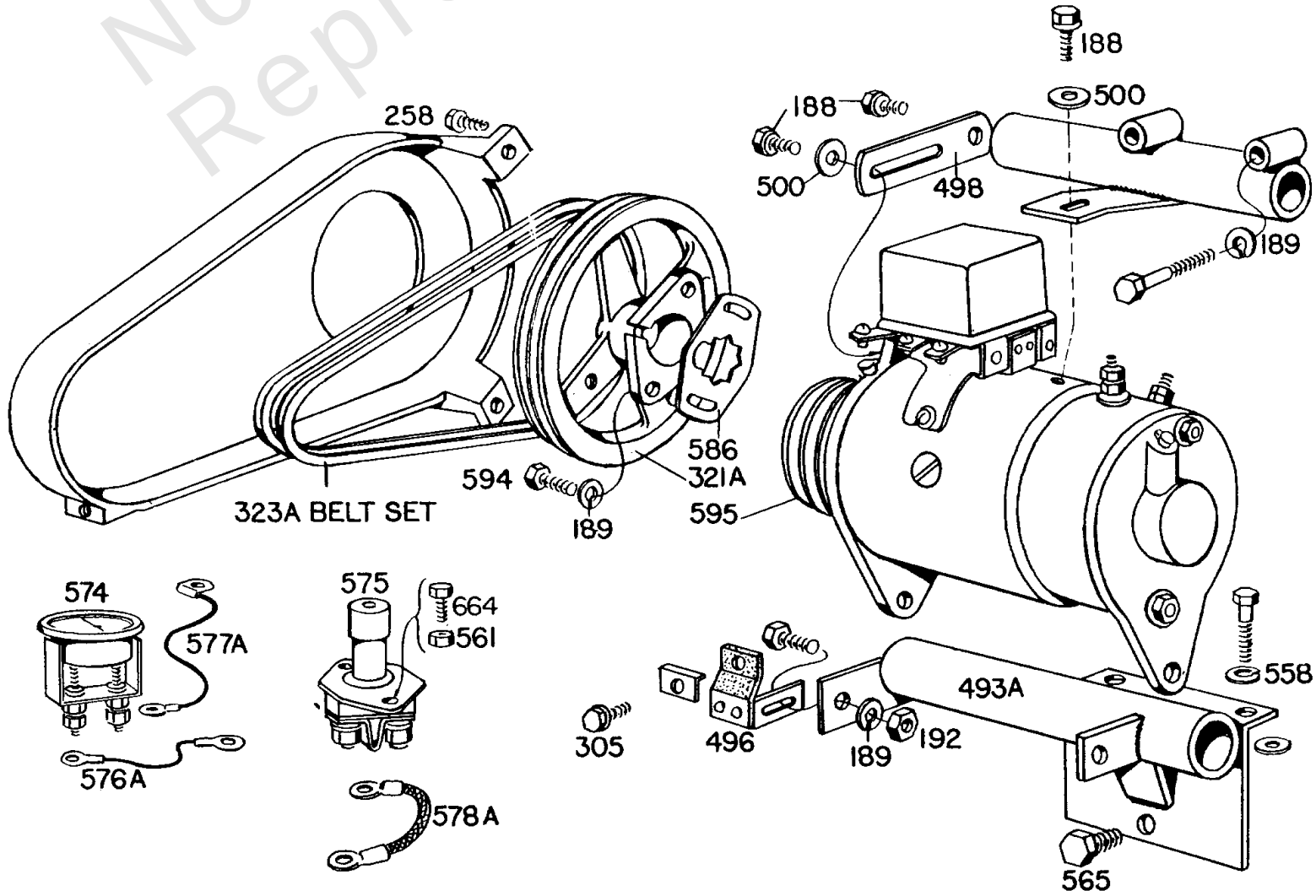

Not For Reproduction

Electric Starters

REF NO	PART NO	QTY	DESCRIPTION
85	91386		SCREW -(2)
169	90832		SCREW -(Blower Housing)
188	93535		SCREW -(5/16-18 X 3/4)
189	90366		WASHER
192	91397		NUT -(5/16-18)
258	93062		SCREW
305	93158		SCREW -(1/4-20 X 5/8)
321A	210630		PULLEY, Starter
321	211166		PULLEY, Starter
323A	296499		BELT, Vee -(Consists Of Matched Set Of 2)
323	67918		BELT, Vee -(Low Position)
325	299308		PULLEY, Rope Starter -(With Screen)
328	221531		GUARD, Belt
329	93158		SCREW -(1/4-20 X 5/8)
478	221745		KIT, Panel
492	297779		MOTOR, Starter -(Delco-Remy #1101864 & Pulley-Delco-Remy #1949358)
493A	294815		BRACKET, Starter Motor
493	211169		BRACKET, Starter Motor
496	294779		BRACKET, Mounting
498	220881		BRACKET, Link
500	91325		WASHER
501A	295924		REGULATOR -(Flat Mount, Delco-remy)
501	297196		REGULATOR -(Saddle Mount, Delco-remy)
558	92268		WASHER -(3/8 X 1/8 X 3/32)
561	92278		NUT
565	93142		SCREW
574	295158		AMMETER
575	299139		SWITCH, Starting
576A	295160		WIRE ASSEMBLY
576	298579		WIRE ASSEMBLY -(Ignition Switch to Indicator Lamp)
577A	295161		WIRE ASSEMBLY
577	298582		WIRE ASSEMBLY -(Starter Switch to Ign Switch & Bat on Regulator)
578A	295162		CABLE, Starter
578	298583		WIRE ASSEMBLY -(To Generator Term, Regulator & Indicator Light Term)
586	22906		RETAINER
594	91449		SCREW
595	230603		PULLEY, Starter -(Delco-remy No. 1945744)

Not For Reproduction

Footnotes:

Used to Mount Valve Cover

Copyright © Briggs & Stratton. All Rights reserved

Mfg. No: 233431-0166-99

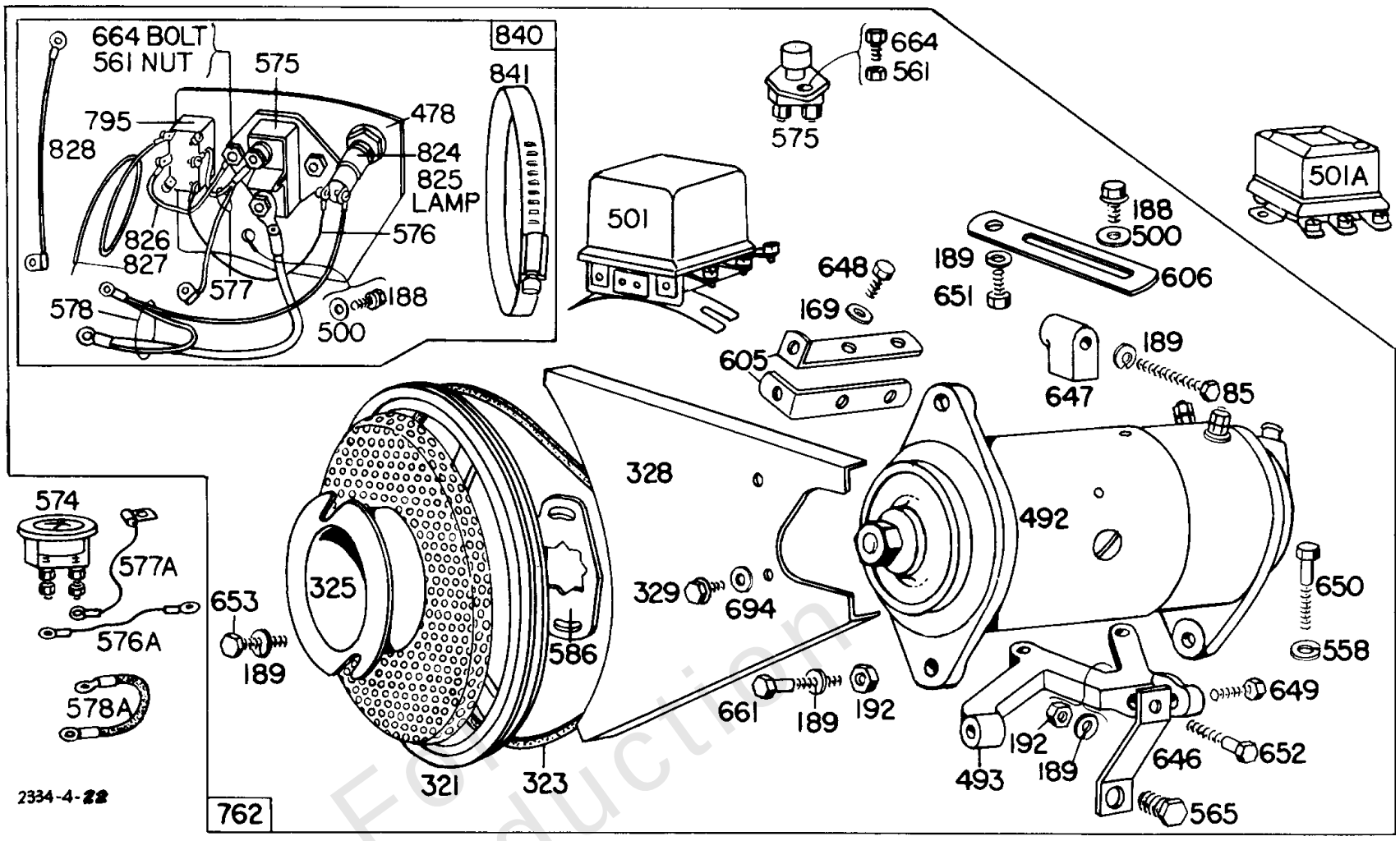

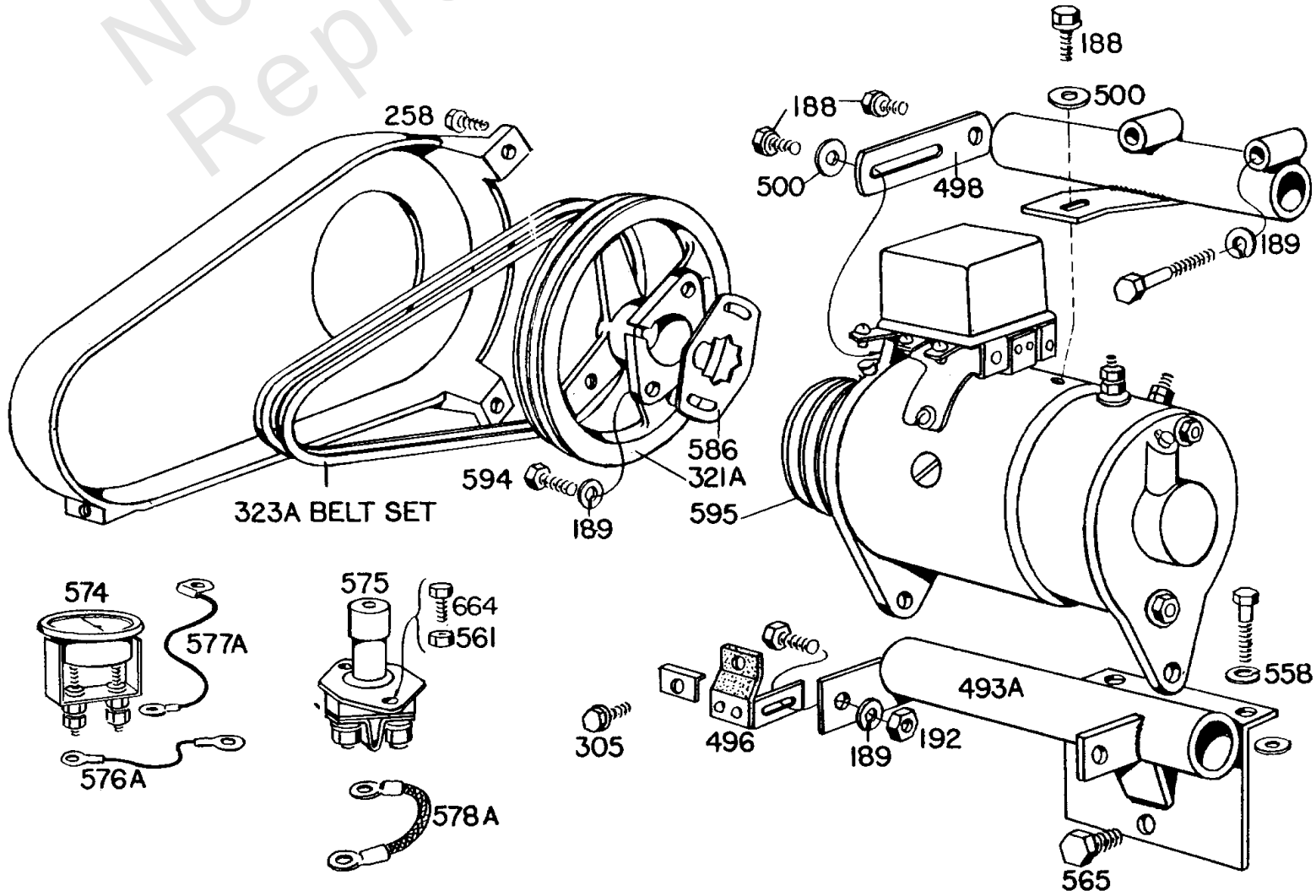

Not For Reproduction

Electric Starters

REF NO	PART NO	QTY	DESCRIPTION
605	297171		BRACKET, Support -(Lower)
606	221442		STRAP, Adjusting
606	221931		STRAP, Adjusting
606	221932		BRACKET, Starter Motor
606	221933		BRACKET, Starter Motor
606	91397		NUT -(5/16-18)
606	93535		SCREW -(5/16-18 X 3/4)
646	221472		BRACKET, Support
647	211170		BRACKET, Support
648	91468		SCREW -(1/4-20 X 3/8)
649	93546		SCREW -(5/16-18 X 1-1/4)
650	91814		SCREW -(3/8-16 X 2)
651	92034		SCREW -(5/16-18 X 1/2)
652	91162		SCREW -(5/16-18 X 1-1/2)
653	91442		SCREW -(Pulley)
661	91203		SCREW -(5/16-18 X 1-3/4)
664	93415		SCREW -(1/4-20 X 3/4)
694	220863		WASHER -(1/4 X 5/8 X 1/32) (1/4 X 5/8 X 1/32)
762	298865		KIT, Electric Starter -(12 Volt) (with Fuel Pump
795	298590		SWITCH, Toggle
824	298586		LIGHT, Indicator
825	67245		LIGHT, Indicator -(#1893 T3-1/4 Bulb, Miniature Bayonet Base, 12V)
826	298580		WIRE ASSEMBLY -(Ignition Switch To Ground)
827	298581		WIRE, Stop
828	298578		WIRE ASSEMBLY
840	298561		KIT, Panel
841	297197		CLAMP

Not For Reproduction

Footnotes:

Used to Mount Valve Cover

Copyright © Briggs & Stratton. All Rights reserved

Replacement Engine - US & Canada

REF NO	PART NO	QTY	DESCRIPTION
	-----		No engine replacement. Repair engine with individual parts.
	-----		Top No-Load Speed: 3700 -Trim: ALL
	-----		Service Note: For all Go-Karts use only a Model 136200 series engine as a replacement, regardless of the original Model.

Not For Reproduction

Copyright © Briggs & Stratton. All Rights reserved