Parts Manual

Mfg. No: 221432-0145-01

Copyright © Briggs & Stratton. All Rights reserved

22-Jun-2026

Model Components

Page

Air Cleaner Grp, Muffler Grp. 4
Alternator Chart. 8
Blower Hsg, Flywheel,Screens. 10
Carburetor Assy. 12
Controls. 16
Crankcase Cover, Cam. 18
Crankshaft. 20
Cylinder, Head. 22
Electric Starter. 24
Electric Starter. 26
Electric Starter. 28
Fuel Tank Grps. 30
Gasket Sets. 34
Gear Reducer Assy, Sno Gard. 38
Key Panel, Elect. 40
Oil Fill, Oil Gard. 44
Piston Grp. 48
Replacement Engine - US & Canada. 50
Rewind Assy. 51

Not For Reproduction

Copyright © Briggs & Stratton. All Rights reserved

Air Cleaner Grp, Muffler Grp

Mfg. No: 221432-0145-01

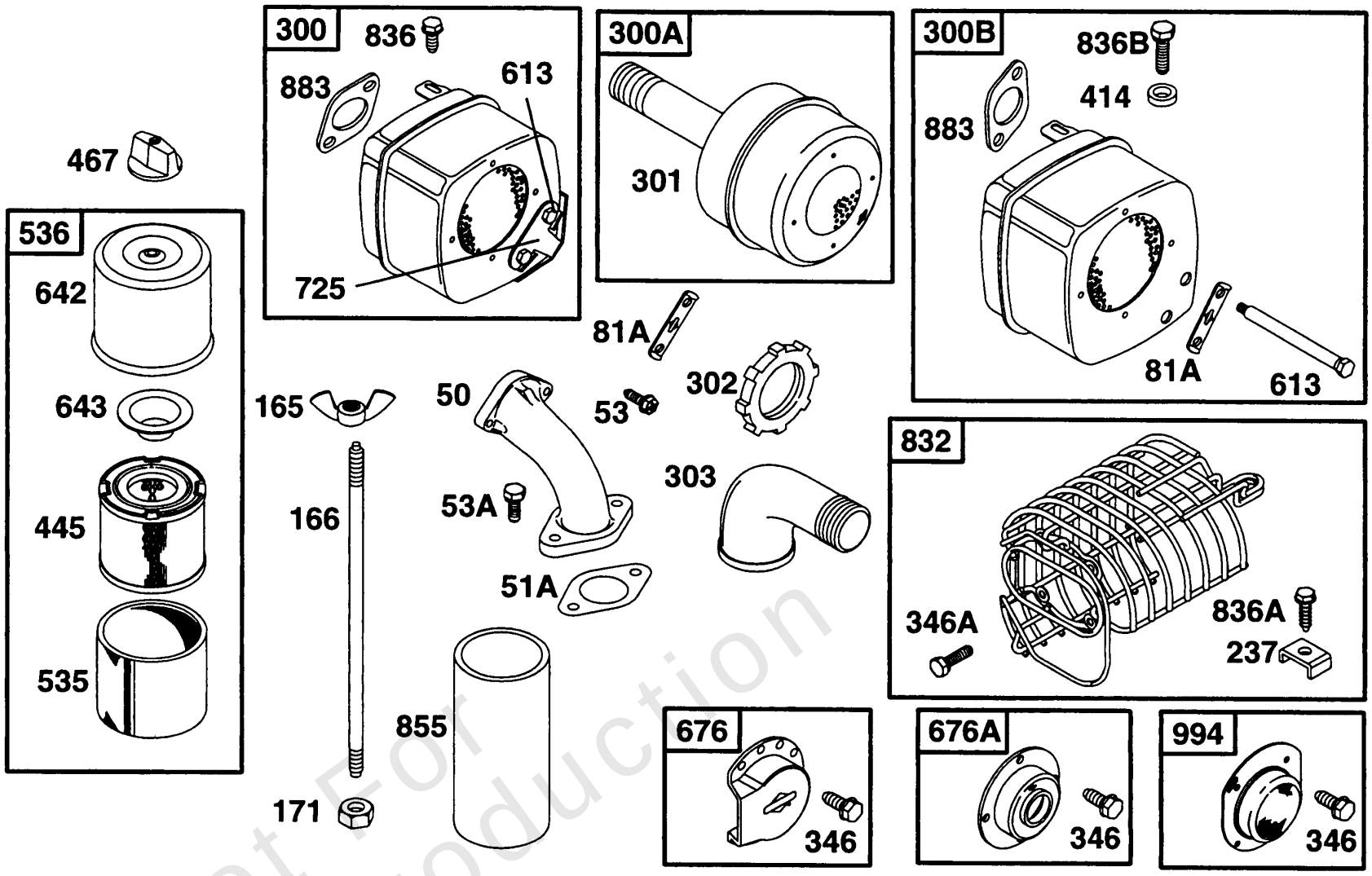

Not For Reproduction

Copyright © Briggs & Stratton. All Rights reserved

Air Cleaner Grp, Muffler Grp

REF NO	PART NO	QTY	DESCRIPTION
50	212301		MANIFOLD, Intake
51A	498869		GASKET, Intake -Included in Gasket Set-Part No. 492653. Included in Valve Overhaul Gasket Set-Part No. 498537. Included in Carburetor Kit-See Ref. 121
53A	93415		SCREW -(1/4-20 X 3/4)
53	93208		SCREW -(Intake Manifold)
81A	223016		LOCK, Muffler Screw
165	94289		NUT
166	231727		STUD -(9 1/2)
166	93110		SCREW
171	92129		NUT -(1/4-28)
237	222379		RETAINER, Muffler Guard
300B	491626		MUFFLER
300A	391569		MUFFLER
300	491413		MUFFLER -(Square Lo Tone)
301	93768		PIPE, Exhaust -(5 1/4)
301	93978		PLUG, Oil Drain
302	261564		LOCKNUT -(Muffler and Elbow)
303	91308		MANIFOLD, Exhaust -(1 Street)
346A	93587		SCREW -(1/4-20 X 1)
346	94896		SCREW -(Muffler Deflector)
414	231109		SPACER
445	393957		FILTER, A/C Cartridge
467	391908		KNOB, Air Cleaner Cover
535	271794		FILTER, Air Cleaner Foam
536	391063		CLEANER, Air
613	93927		SCREW -(Muffler)
642	224885		COVER, Air Cleaner
643	222272		RETAINER, Air Filter
643	93490		SCREW -(Rotating Screen)
676A	396903		DEFLECTOR, Muffler
676	393761		DEFLECTOR, Muffler -(Side Outlet)
725	223023		SHIELD, Heat
832	398249		GUARD, Muffler
836A	94186		SCREW -(Tapping)
836B	94885		SCREW
836	94513		SCREW -(Blower Housing)
855	231145		MANIFOLD, Intake -Use(s): 222726 Strap-Carburetor
883	272293		GASKET, Exhaust -Included in Gasket Set-Part No. 492653. Included in Valve Overhaul Gasket Set-Part No. 498537

Not For Reproduction

Air Cleaner Grp, Muffler Grp

Mfg. No: 221432-0145-01

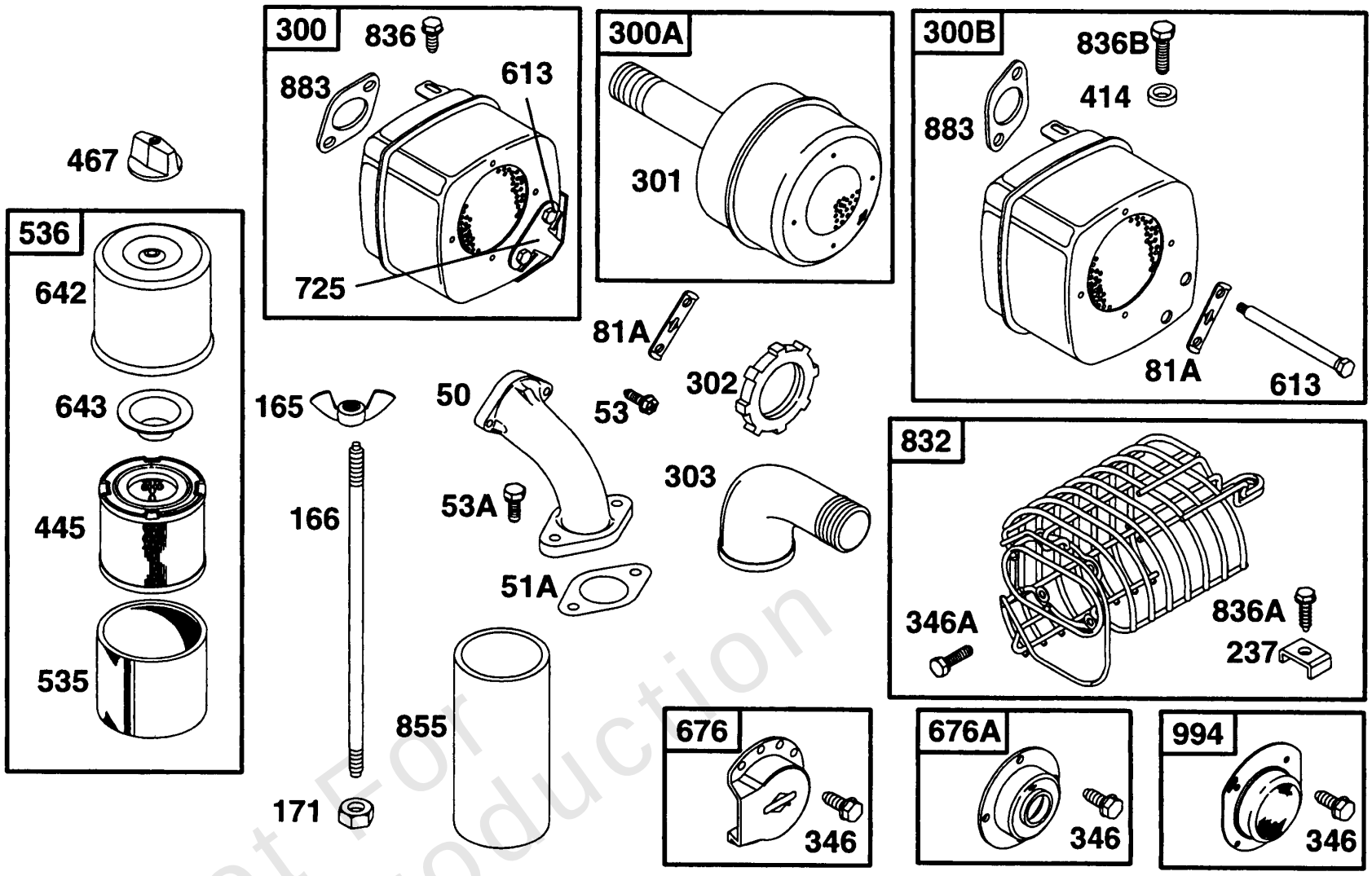

Not For Reproduction

Copyright © Briggs & Stratton. All Rights reserved

Air Cleaner Grp, Muffler Grp

REF NO	PART NO	QTY	DESCRIPTION
994	392390		ARRESTOR, Spark

Not For Reproduction

Copyright © Briggs & Stratton. All Rights reserved

Mfg. No: 221432-0145-01

DC ONLY	DUAL CIRCUIT	AC ONLY	10 AMP
SEE FLYWHEEL ASSEMBLY	SEE FLYWHEEL ASSEMBLY	SEE FLYWHEEL ASSEMBLY	SEE FLYWHEEL ASSEMBLY
474	474A 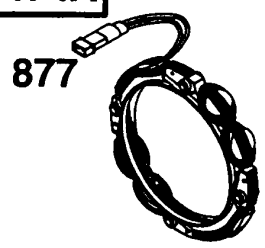	474B	474C
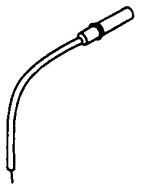	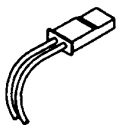		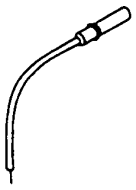
			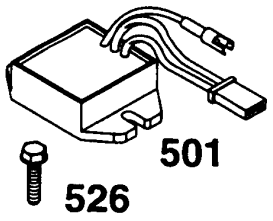

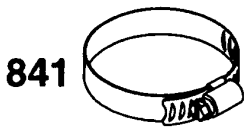

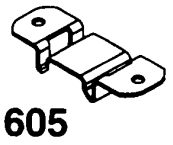

NOTE: ALL STATORS USE NO. 482 MOUNTING SCREW.

Not For Reproduction

Copyright © Briggs & Stratton. All Rights reserved

Alternator Chart

REF NO	PART NO	QTY	DESCRIPTION
474A	393474		ALTERNATOR -(Dual Circuit)
474B	391595		ALTERNATOR -(AC Only)
474C	393295		ALTERNATOR -(10, 13, or 16 Amp-Depending on Size of Flywheel Magnets) (Regulated)
474	391529		ALTERNATOR -(DC Only)
482	93621		SCREW -(Tapping)
501	394890		REGULATOR -(10, 13, or 16 Amp, Depending on Size of Flywheel Magnets)
526	93343		SCREW -(Control Panel)
605	222934		BRACKET, Mounting
841	393514		CLAMP
877A	393814		WIRE/CONNECTOR, Alternator -(10 Amp Regulated)
877	393456		WIRE/CONNECTOR, Alternator
878A	393422		WIRE ASSEMBLY -(Dc Only)
878B	399916		WIRE/CONN-ALTERNATOR -(16 Amp Regulated)
878	393362		HARNESS, Alternator -(Dual Circuit)

Not For Reproduction

Copyright © Briggs & Stratton. All Rights reserved

Blower Hsg, Flywheel,Screens

Mfg. No: 221432-0145-01

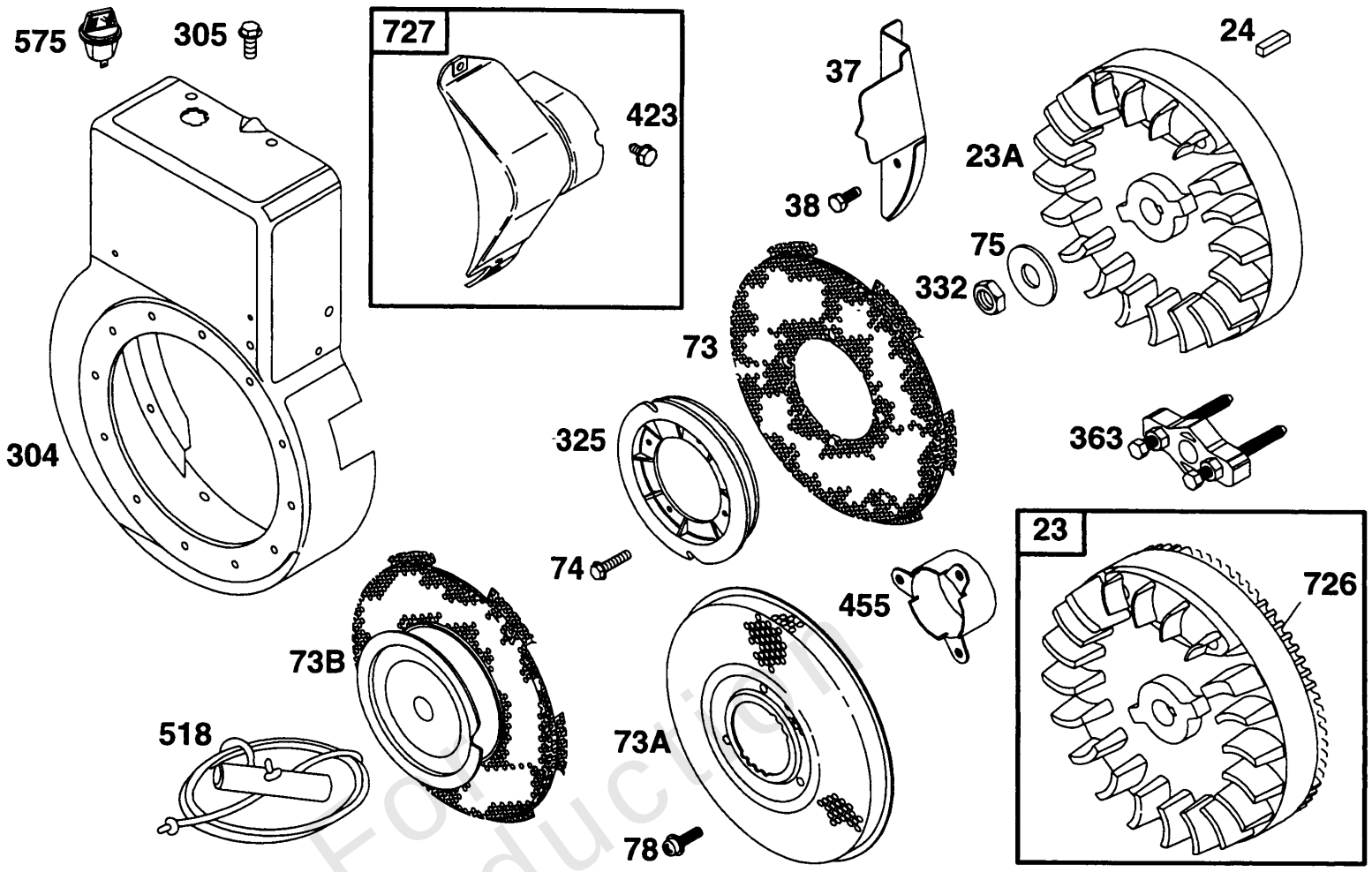

Not For Reproduction

Copyright © Briggs & Stratton. All Rights reserved

Blower Hsg, Flywheel,Screens

REF NO	PART NO	QTY	DESCRIPTION
23A	498896		FLYWHEEL -(Rewind Starter)
23A	392157		FLYWHEEL -(Rope And Rewind Starter) -Used Before Code Date 96070600
23	391988		FLYWHEEL -(Plastic Motor Drive) -Used Before Code Date 96070600
23	498911		FLYWHEEL
24	222698		KEY, Flywheel
37	224886		GUARD, Flywheel -(Engines with Rope or Recoil Starter)
38	94811		SCREW
73A	224517		SCREEN, Rotating
73B	496084		SCREEN/PULLEY
73	221796		SCREEN, Rotating
74	93758		SCREW -(Rotating Screen)
74	94680		SCREW -(Starter Clutch)
75	225136		WASHER -(Flywheel)
78	94626		SCREW
304	398595		HOUSING, Blower
305	93042		SCREW
305	94786		SCREW -(1/2)
325	280457		PULLEY, Rope Starter
332	94877		NUT -(Flywheel)
363	19203		PULLER, Flywheel
423	93410		SCREW
423	94625		SCREW
455	222561		CUP, Flywheel
518	69932		GRIP, Starter Rope
575	299139		SWITCH, Starting
575	396691		SWITCH, Rotary -(Mechanical Governor)
726	392134		GEAR, Ring
727	395405		COVER, Starter Drive

Not For Reproduction

Mfg. No: 221432-0145-01

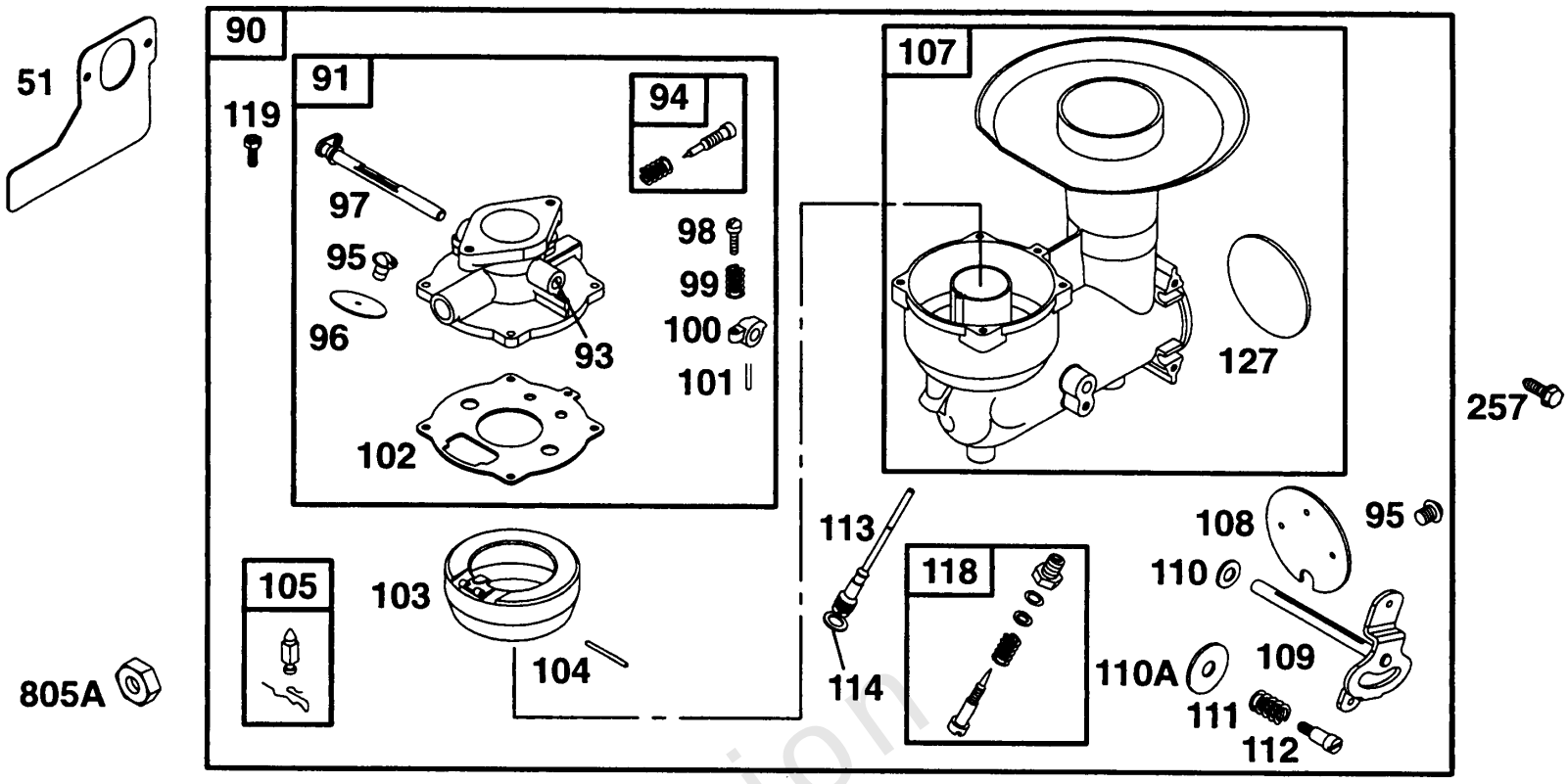

Not For Reproduction

Copyright © Briggs & Stratton. All Rights reserved

Carburetor Assy

REF NO	PART NO	QTY	DESCRIPTION
51	270267		GASKET, Intake -Included in Gasket Set-Part No. 492653. Included in Carburetor Kit-See Ref. 121
90	392587		CARBURETOR -(Manual Choke)
91	391833		BODY, Upper Carburetor
93	23108		BUSHING, Throttle Shaft
94	292681		VALVE, Idle Mixture -Included in Carburetor Kit-See Ref. 121
95	93499		SCREW -(Throttle Valve)
96	221939		VALVE, Throttle
97	391596		SHAFT, Throttle
98	91920		SCREW -(8-32 X 5/8)
99	26157		SPRING, Compression
100	212904		STOP, Throttle
101	93043		PIN, Shaft
102	270268		GASKET, Carburetor Body -Included in Carburetor Kit-See Ref. 121
103	298514		FLOAT, Carburetor
104	230896		PIN, Float Hinge -Included in Carburetor Kit-See Ref. 121
105	394681		KIT, Needle/Seat -(Gravity Feed) Included in Carburetor Kit-See Ref. 121
105	394682		KIT, Needle/Seat -(Gravity Feed)
105	394683		KIT, Needle/Seat -(Pump Feed)
107	391829		BODY, Lower Carburetor
108	391836		VALVE, Choke
109	391583		SHAFT, Choke
110A	222712		WASHER
110	224026		WASHER
110	225137		WASHER
111	26155		SPRING, Friction
112	23123		SCREW
113	390950		NOZZLE, Carburetor -Used Before Code Date 81060200
113	394730		NOZZLE, Carburetor -(Labeled B) Included in Carburetor Kit-See Ref. 121
114	68667		WASHER -(Viton Seat) Included in Carburetor Kit-See Ref. 121
118	99525		VALVE, High Speed -Include(s): 22235 Washer 26336 Spring-Needle Valve 65978 Seal-O-Ring 394033 Valve-Idle Adjustment Included in Carburetor Kit-See Ref. 121
118	99525		VALVE, High Speed -Included in Carburetor Kit-See Ref. 121. Include(s): 22235 Washer 26336 Spring-Needle Valve 65978 Seal-O-Ring 394033 Valve-Idle Adjusting
119	94152		SCREW -(Upper To Lower Carburetor Body)
127	221747		PLUG, Welch -Included in Carburetor Kit-See Ref. 121
257	93543		SCREW -(10-32 X 3/8)

Footnotes:

Included in Carburetor Kit-See Ref. 121

Not For Reproduction

Copyright © Briggs & Stratton. All Rights reserved

Mfg. No: 221432-0145-01

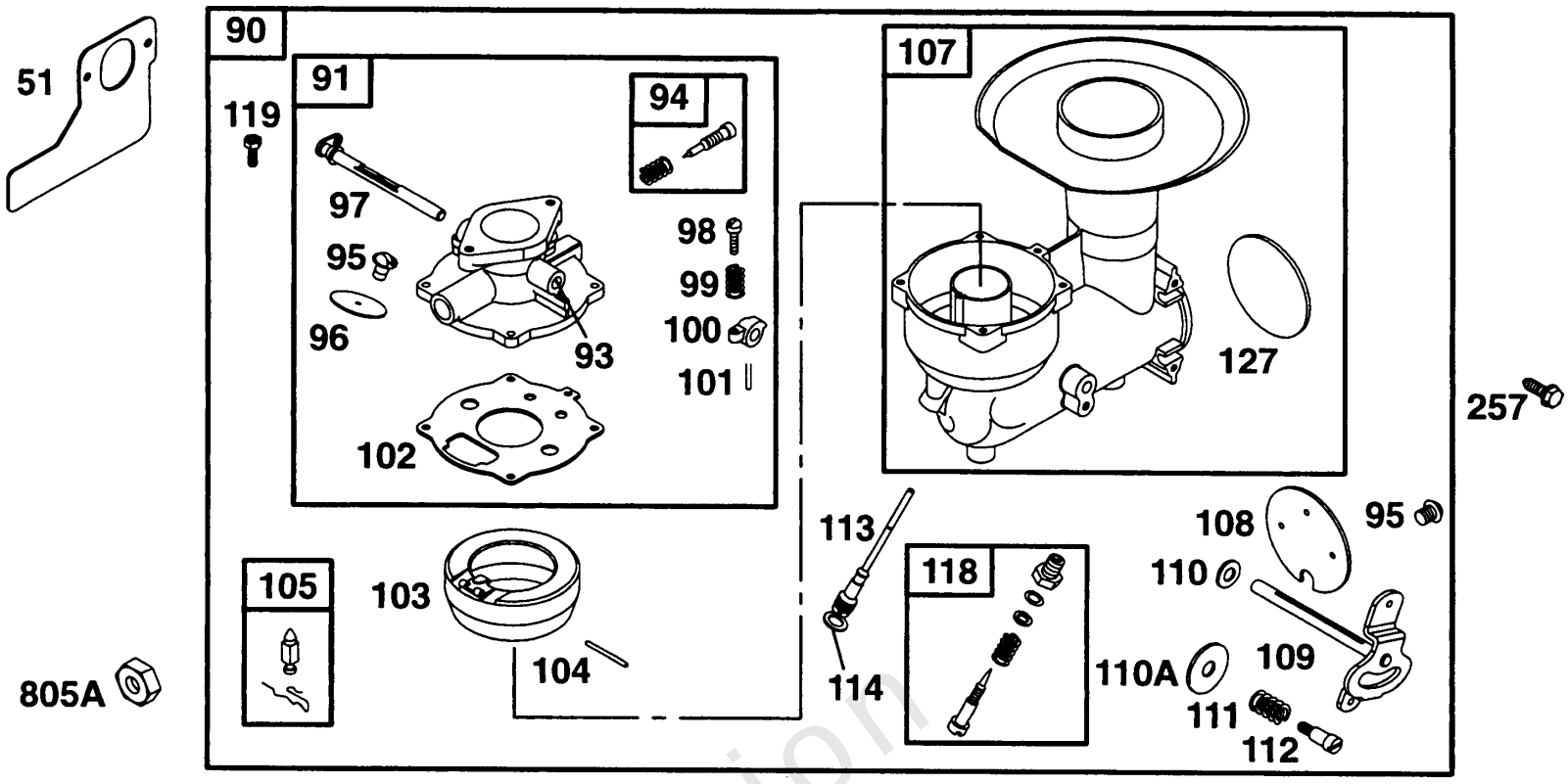

Not For Reproduction

Copyright © Briggs & Stratton. All Rights reserved

Carburetor Assy

REF NO	PART NO	QTY	DESCRIPTION
805A	231001		NUT

Not For Reproduction

Footnotes:

Included in Carburetor Kit-See Ref. 121

Copyright © Briggs & Stratton. All Rights reserved

Mfg. No: 221432-0145-01

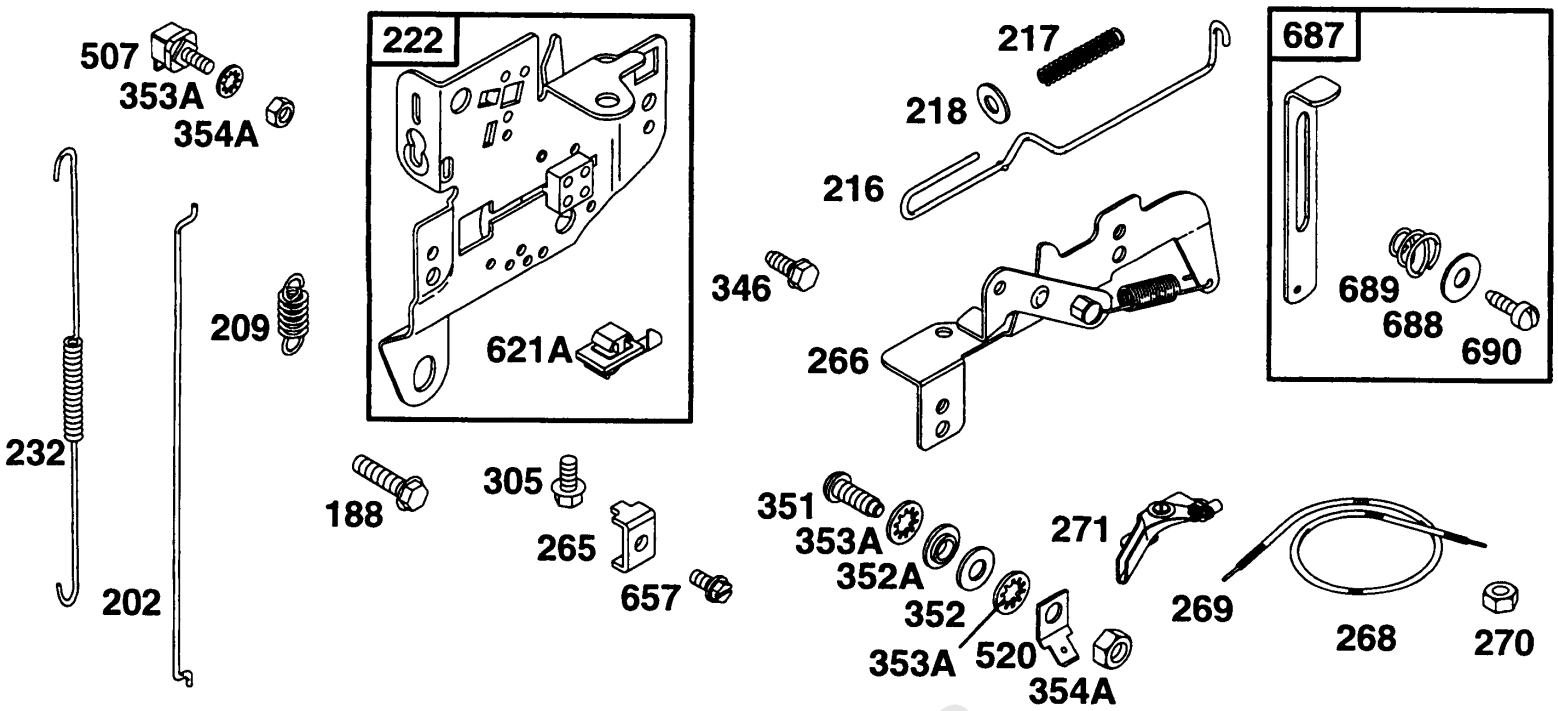

Not For Reproduction

Copyright © Briggs & Stratton. All Rights reserved

REF NO	PART NO	QTY	DESCRIPTION
188	94627		SCREW -(Fuel Tank)
188	94786		SCREW -(1/2)
202	261236		LINK, Mechanical Governor
209	260695		SPRING, Governor
216	262027		LINK, Choke
217	261119		SPRING, Choke Return
218	222352		WASHER
222	391633		BRACKET, Control -Used Before Code Date 83121600
222	399152		BRACKET, Control -(Manual Choke)
232	260478		SPRING/LINK, Mechanical Governor
265	221535		CLAMP, Casing -(Stamped Steel)
266	392150		CONTROL, Throttle
268	65616		CASING, Control Wire -(Cut To Required Length)
269	26633		WIRE, Control -(Cut To Required Length)
270	63426		NUT -(Control Wire Casing)
271	290568		LEVER, Control
305	93042		SCREW
305	94786		SCREW -(1/2)
346	94896		SCREW -(Muffler Deflector)
351	93735		SCREW
352A	66554		WASHER -(Insulating)
352	66068		WASHER -(Fiber)
353A	92791		WASHER
354A	90576		NUT -(Ground Terminal)
507	398525		INSULATOR
520	93722		TERMINAL, Ground
621A	297472		SWITCH, Stop -Used Before Code Date 85041400
621A	496590		SWITCH, Toggle -Use(s): 93888 Nut-Hex.
621A	396847		SWITCH, Stop
657	93496		SCREW -(10-32 X 5/8)
687	390701		SLIDE, Control
688	221766		SPRING, Friction
689	260847		SPRING, Friction
690	90746		SCREW -(10-32 X 5/8)

Not For Reproduction

Copyright © Briggs & Stratton. All Rights reserved

Mfg. No: 221432-0145-01

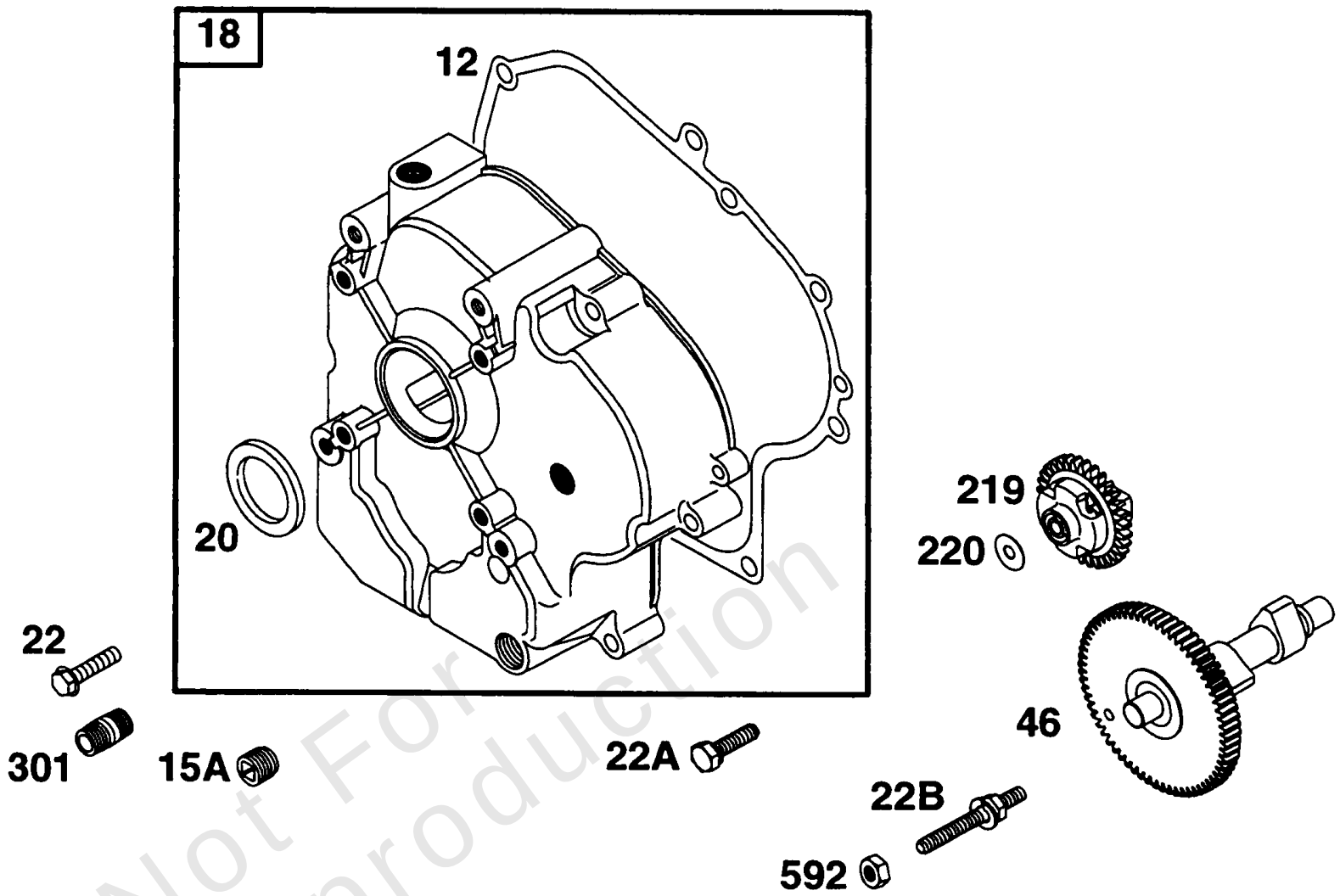

Not For Reproduction

Copyright © Briggs & Stratton. All Rights reserved

Crankcase Cover, Cam

REF NO	PART NO	QTY	DESCRIPTION
12	272125		GASKET, Crankcase -(.015) Included in Gasket Set-Part No. 492653
12	272219		GASKET, Crankcase -(.005) Included in Gasket Set-Part No. 492653
12	272220		GASKET, Crankcase -(.009) Included in Gasket Set-Part No. 492653
15A	94720		PLUG, Oil Drain -(Flush)
18	496977		COVER, Crankcase
20	291675		SEAL, Oil -(Crankcase Cover) Included in Gasket Set-Part No. 492653
22A	93764		SCREW -(Crankcase Cover)(Position 6)
22B	94931		STUD -(2 1/2)
22	93585		SCREW -(Crankcase Cover)
46	212897		CAMSHAFT
219	391737		GEAR, Governor -Used Before Code Date 91061000
219	494845		GEAR, Governor
220	221551		WASHER -(Governor Lever)
301	93768		PIPE, Exhaust -(5 1/4)
301	93978		PLUG, Oil Drain
592	231978		NUT
592	92278		NUT -(Starting Switch)
592	94726		NUT

Not For Reproduction

Copyright © Briggs & Stratton. All Rights reserved

Mfg. No: 221432-0145-01

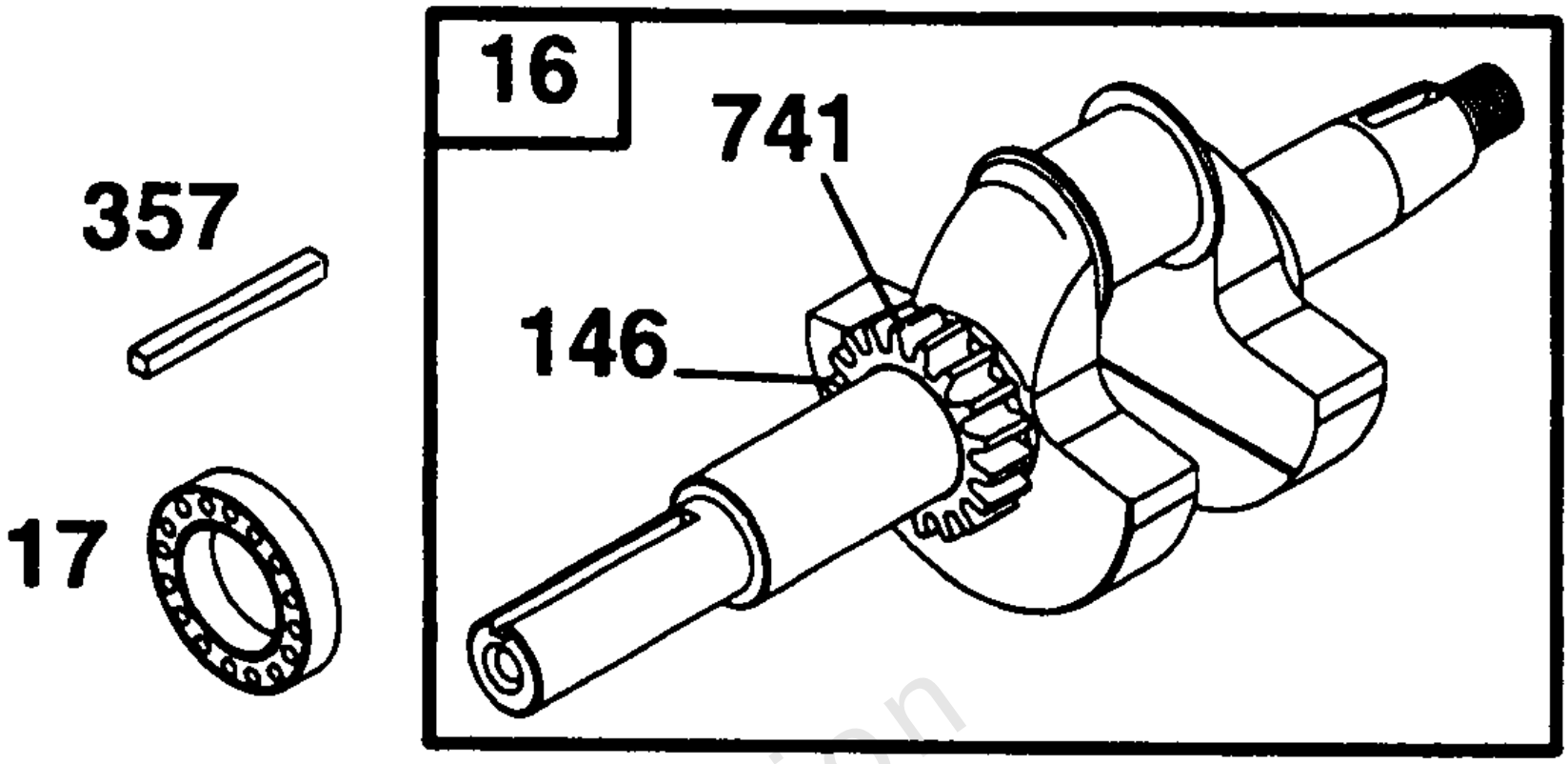

Not For Reproduction

Copyright © Briggs & Stratton. All Rights reserved

Crankshaft

REF NO	PART NO	QTY	DESCRIPTION
16	399708		CRANKSHAFT -Used Before Code Date 82080100
16	491639		CRANKSHAFT
146	94196		KEY, Woodruff
357	91540		KEY, Drive Pulley -(1/4)
741	262135		GEAR, Timing -(Key) -Used Before Code Date 93021800
741	262932		GEAR, Timing

Not For Reproduction

Mfg. No: 221432-0145-01

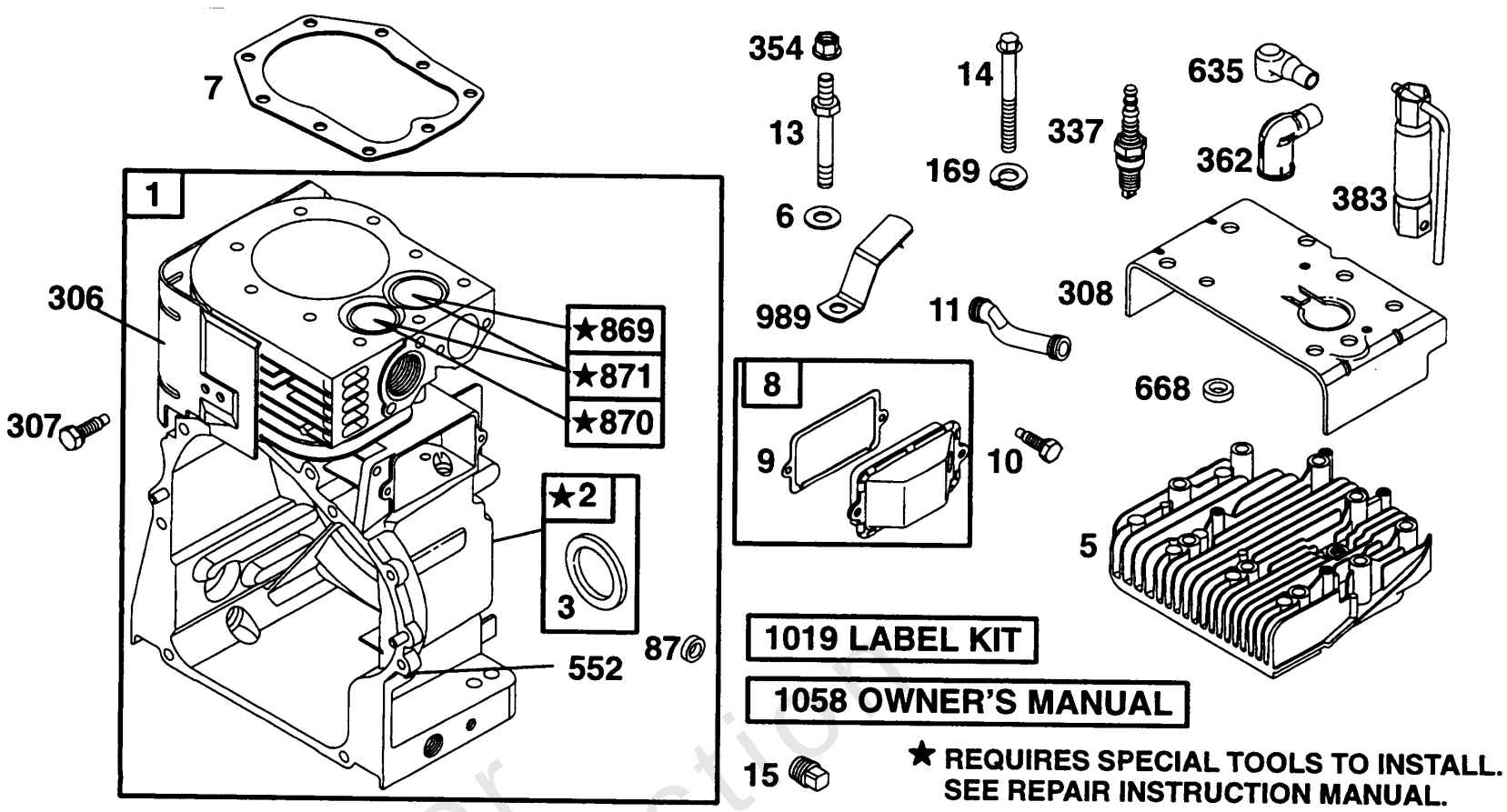

Not For Reproduction

Copyright © Briggs & Stratton. All Rights reserved

Cylinder, Head

REF NO	PART NO	QTY	DESCRIPTION
1	394656		CYLINDER ASSEMBLY
2	399265		KIT, Bushing/Seal -(Magneto Side)
3	391086		SEAL, Oil -Included in Gasket Set-Part No. 492653
5	214194		HEAD, Cylinder
6	22963		WASHER
7	271866		GASKET, Cylinder Head -Included in Gasket Set-Part No. 492653. Included in Valve Overhaul Gasket Set-Part No. 498537
8	495736		BREATHER ASSEMBLY
9	27803		GASKET, Rocker Cover -Included in Gasket Set-Part No. 492653. Included in Valve Overhaul Gasket Set-Part No. 498537
10	94719		SCREW
11	280112		TUBE, Breather
13	94776		STUD -(3 15/16)
14	22963		WASHER
14	94622		SCREW -(3)
14	94926		STUD -(3 15/16) (3 5/16)
14	94931		STUD -(2 1/2)
15	92738		PLUG, Oil Drain
15	94239		PLUG, Oil Drain -(Square Head)
87	491323		SEAL, Governor Shaft -Included in Gasket Set-Part No. 492653
169	90366		WASHER
306	224882		SHIELD, Cylinder
307	94386		SCREW
308	224897		COVER, Cylinder Head
337	298809		PLUG, Spark
337	492167		PLUG, Spark
337	802592		PLUG, Spark -(Resistor)
354	94726		NUT
362	392273		SHIELD, Spark Plug
383	89838		WRENCH, Spark Plug
552	491893		BUSHING, Governor Crank -(Includes Seal, Ref. 87)
635	66538		BOOT, Spark Plug
668	231186		SPACER
869	261463		SEAT, Valve -(Intake)
870	262924		SEAT, Valve -(Exhaust)
871	231218		BUSHING, Valve Guide -(Intake)
871	261961		BUSHING, Valve Guide -(Exhaust)
989	393242		SWITCH, Stop
1019	491253		KIT, Label
1058	270861		MANUAL, Operator's

Not For Reproduction

Copyright © Briggs & Stratton. All Rights reserved

Mfg. No: 221432-0145-01

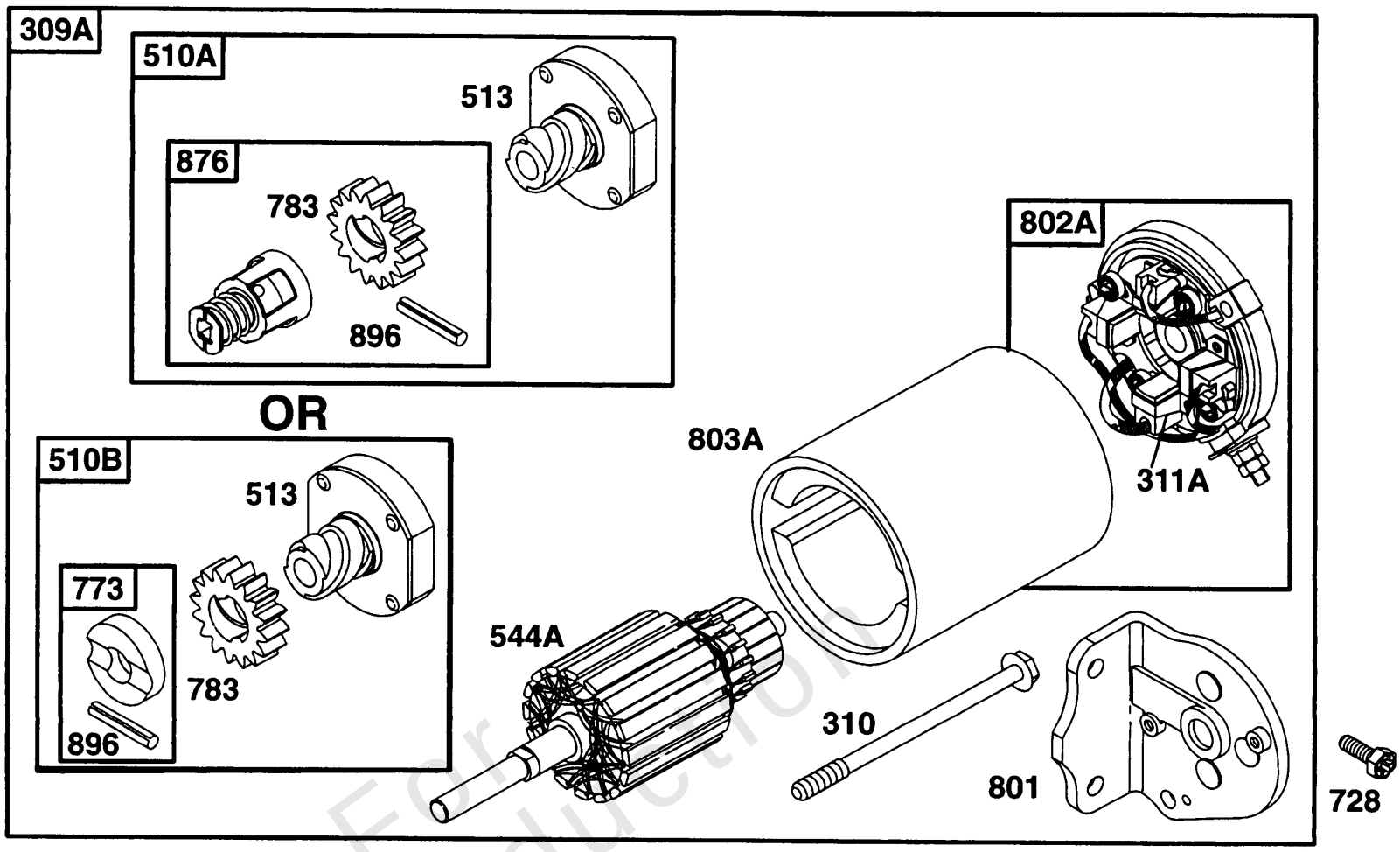

Not For Reproduction

Electric Starter

REF NO	PART NO	QTY	DESCRIPTION
309A	394805		MOTOR, Starter -(3 1/16 Housing)
310	94003		SCREW -(3 5/8 Housing)
311A	391705		SET, Brush -(3 1/16 Housing)
311A	395538		SET, Brush -(3-5/8 or 4 3/8 Housing)
311A	492020		SET, Brush -(3 15/32 Housing)
510A	495878		DRIVE, Starter -(4 3/8 Housing)
510B	391461		DRIVE, Starter -(3 1/2 Housing)
513	398003		CLUTCH, Starter
544A	390837		ARMATURE, Starter -(3 5/8 Housing)
728	94951		SCREW
773	391462		RETAINER
783	280104		GEAR, Pinion -(Briggs & Stratton 12V)
801	394856		CAP, Drive
802A	395537		CAP, End -(3 5/8 Housing)
802A	492021		CAP, End -(3 15/32 Housing)
803A	398159		HOUSING, Starter -(3 5/8 Housing)
876	495877		DRIVE, Starter -(4 3/8 Housing)
896	94288		PIN, Drive Retainer

Not For Reproduction

Copyright © Briggs & Stratton. All Rights reserved

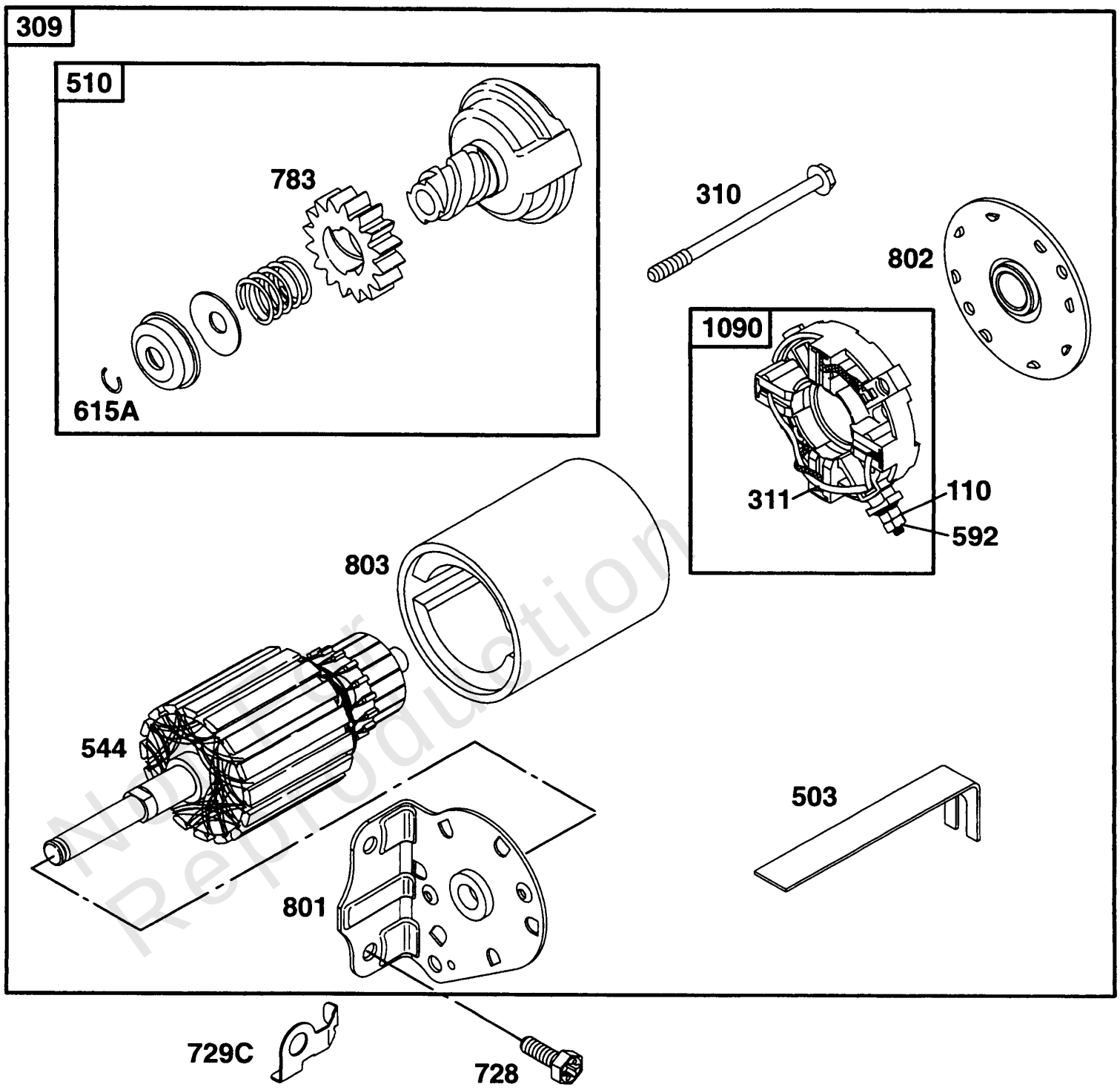

Non-for Reproduction

Electric Starter

REF NO	PART NO	QTY	DESCRIPTION
110	224026		WASHER
110	225137		WASHER
309	497595		MOTOR, Starter -(3 5/8) (Plastic Ring Gear)
310	94003		SCREW -(3 5/8 Housing)
311	497608		SET, Brush
503	806000		STRAP, Ground -(4 9/16 Housing)
510	497606		DRIVE, Starter -(Includes 693058 And 693059 Starter Gear)
544	497603		ARMATURE, Starter -(3 5/8 Housing)
592	231978		NUT
592	92278		NUT -(Starting Switch)
592	94726		NUT
615A	263080		RING, Retaining
728	94951		SCREW
729C	225170		CLIP, Wire
783	280104		GEAR, Pinion -(Briggs & Stratton 12V)
801	394856		CAP, Drive
802	497607		CAP, End
803	497604		HOUSING, Starter -(3 5/8 Housing)
1090	497605		RETAINER, Brush

Not For Reproduction

Copyright © Briggs & Stratton. All Rights reserved

Mfg. No: 221432-0145-01

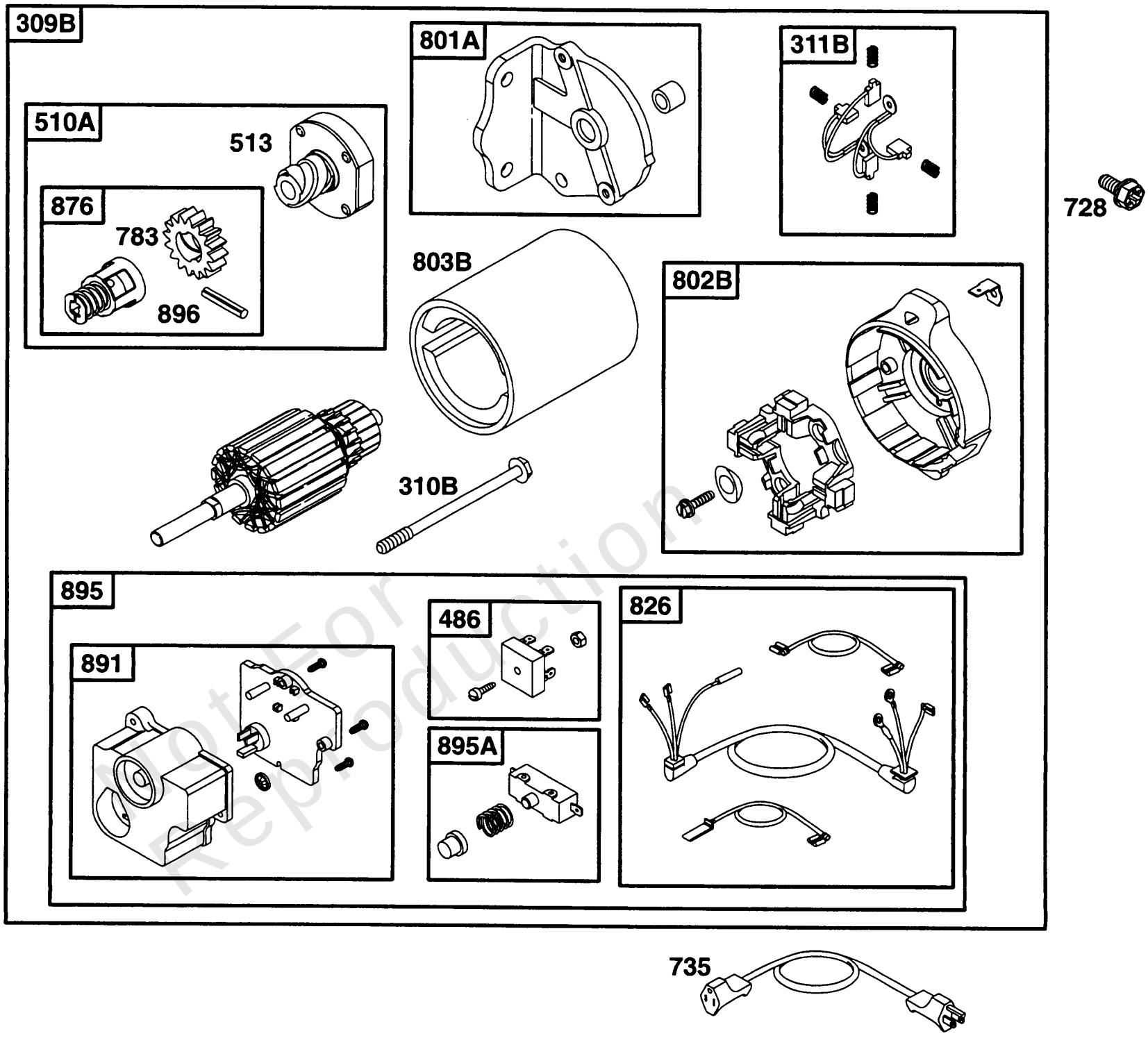

Not For Reproduction

Copyright © Briggs & Stratton. All Rights reserved

Electric Starter

REF NO	PART NO	QTY	DESCRIPTION
309B	396505		MOTOR, Starter -(3 1/2 Housing) (Briggs & Stratton 110V)
310B	93934		SCREW -(3 1/2 Housing)
311B	393612		SET, Brush -(3 1/2 Housing) (110V)
486	393707		RECTIFIER -(Briggs & Stratton 110V)
510A	495878		DRIVE, Starter -(4 3/8 Housing)
513	398003		CLUTCH, Starter
728	94951		SCREW
735	390966		CORD, Starter -(Includes Adaptor Plug)
783	280104		GEAR, Pinion -(Briggs & Stratton 12V)
801A	492060		CAP, Drive
802B	491192		CAP, End -(3 1/2 Housing) (Briggs & Stratton 110V)
803B	491008		HOUSING, Starter -(3 1/2 Housing) (Briggs & Stratton 110V)
826	393706		HARNESS, Wiring -(Briggs & Stratton 110V)
826	397674		WIRE, Stop -(Starter Switch to Ground Wire Terminal)
876	495877		DRIVE, Starter -(4 3/8 Housing)
891	393705		HOUSING, Switch
895A	393708		SWITCH, Starting -(Briggs & Stratton 110V)
895	393486		SWITCH, Starting -(Briggs & Stratton 120V)
896	94288		PIN, Drive Retainer

Not For Reproduction

Copyright © Briggs & Stratton. All Rights reserved

Mfg. No: 221432-0145-01

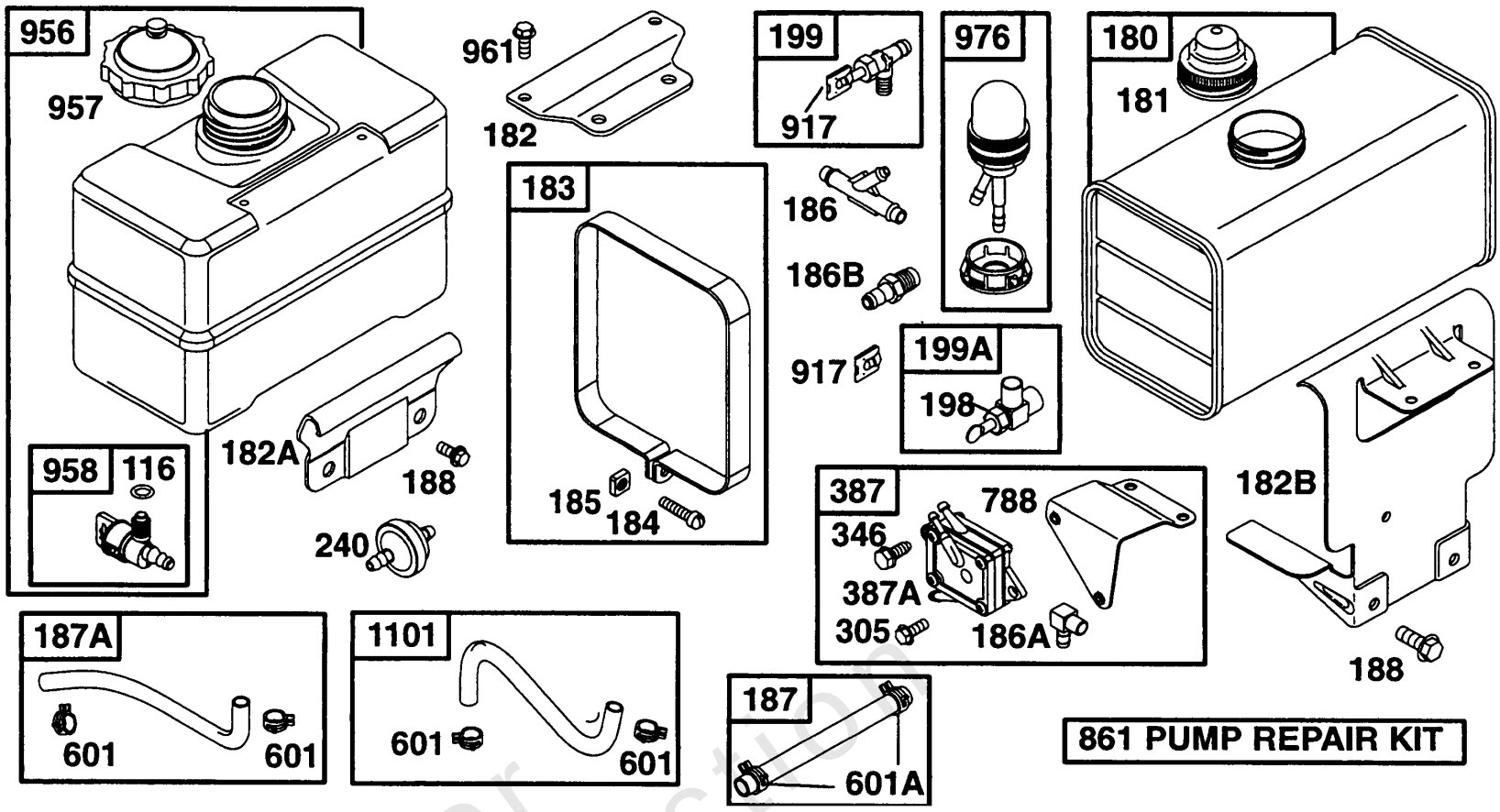

Not For Reproduction

Copyright © Briggs & Stratton. All Rights reserved

Fuel Tank Grps

REF NO	PART NO	QTY	DESCRIPTION
116	271170		SEAL, O-Ring -Included in Gasket Set-Part No. 492653
116	280203		SEAL, O-Ring -(Fuel Shut Off)
180	291488		TANK, Fuel -(6 Quart)
181	392305		CAP, Fuel Tank -(Metal)
182A	224889		BRACKET, Fuel Tank -(Lower)
182B	224878		BRACKET, Fuel Tank -(6 Quart)
182	224888		BRACKET, Fuel Tank -(Upper)
183	291490		STRAP, Fuel Tank -(6 Quart)
184	91257		SCREW -(1/4-20 X 1-1/2)
185	90970		NUT -(1/4-20)
186A	67218		CONNECTOR, Hose
186B	230318		CONNECTOR, Hose
186	280727		CONNECTOR, Hose
187A	399254		LINE, Fuel -(1/4 O.D.)
187	296004		LINE, Fuel -(Cut To Required Length)
188	94627		SCREW -(Fuel Tank)
188	94786		SCREW -(1/2)
198	293934		VALVE, Fuel Shut Off
199A	297563		OUTLET, Tank
199	492649		VALVE, Fuel Shut Off
240	298090		FILTER, Fuel
240	394358		FILTER, Fuel -(Fuel Pump)
305	93042		SCREW
305	94786		SCREW -(1/2)
346	94896		SCREW -(Muffler Deflector)
387A	491922		PUMP, Fuel
387	494280		PUMP, Fuel -(1/4 O.D.)
601A	95162		CLAMP, Hose -(Red)
601A	93807		CLAMP, Hose -(Black)
601	94171		CLAMP, Hose
788	224123		BRACKET, Fuel Pump
861	394462		KIT, Fuel Pump -(Use With Pump 390818 Only)
917	223271		VALVE, Handle Shutoff

Not For Reproduction

Footnotes:

Included in Carburetor Kit-See Ref. 121

Copyright © Briggs & Stratton. All Rights reserved

Mfg. No: 221432-0145-01

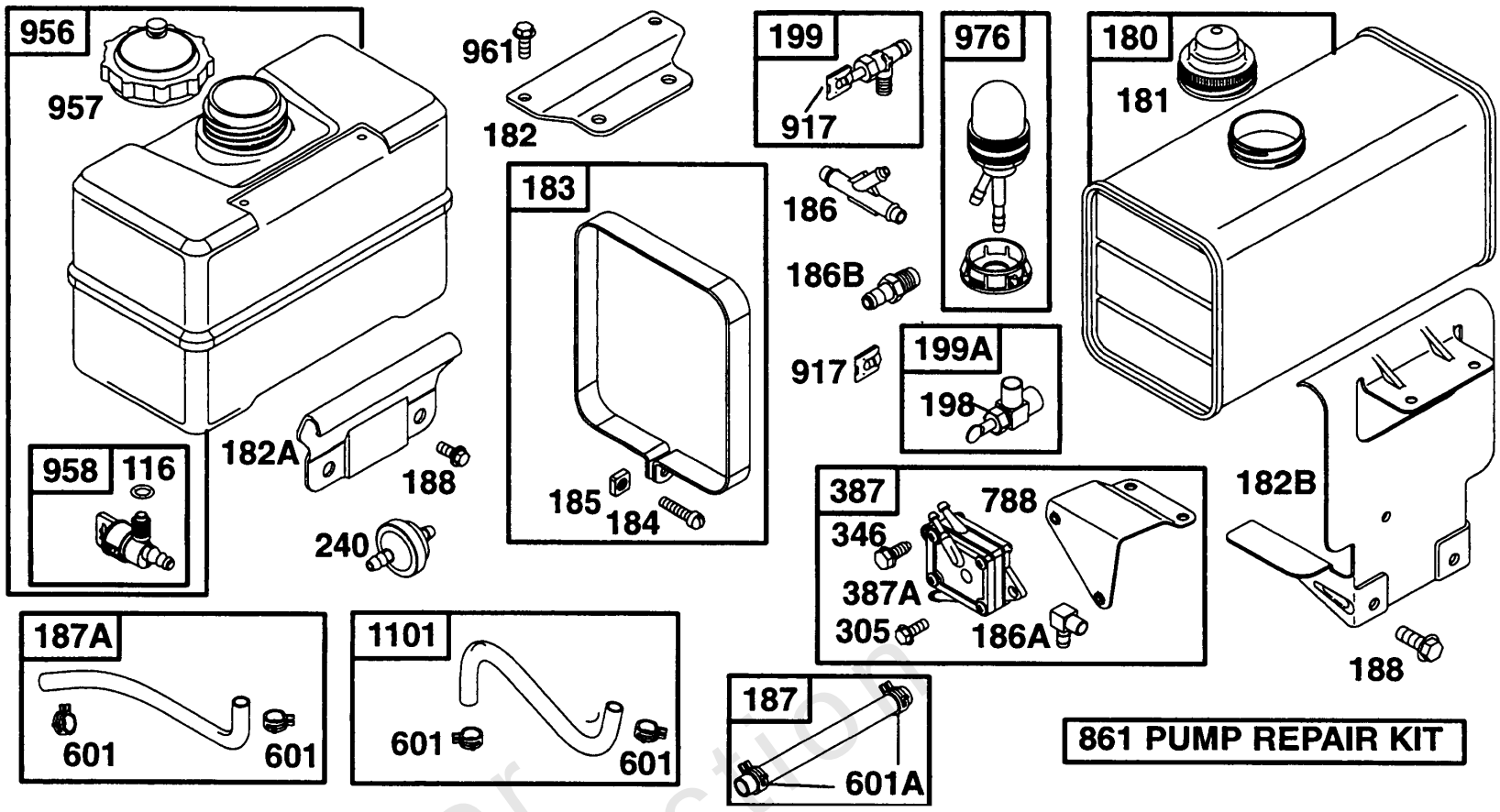

Not For Reproduction

Copyright © Briggs & Stratton. All Rights reserved

Fuel Tank Grps

REF NO	PART NO	QTY	DESCRIPTION
956	493337		TANK, Fuel -(4 Quart) (Plastic)
957	493988		CAP, Fuel Tank -(Plastic)
958	399517		VALVE, Fuel Shut Off -(Plastic)
961	94095		SCREW -(Tapping)
976	399255		PRIMER, Carburetor
1101	399256		LINE, Fuel -(1/4 O.D.)

Not For Reproduction

Footnotes:

Included in Carburetor Kit-See Ref. 121

Copyright © Briggs & Stratton. All Rights reserved

Mfg. No: 221432-0145-01

358 GASKET SET

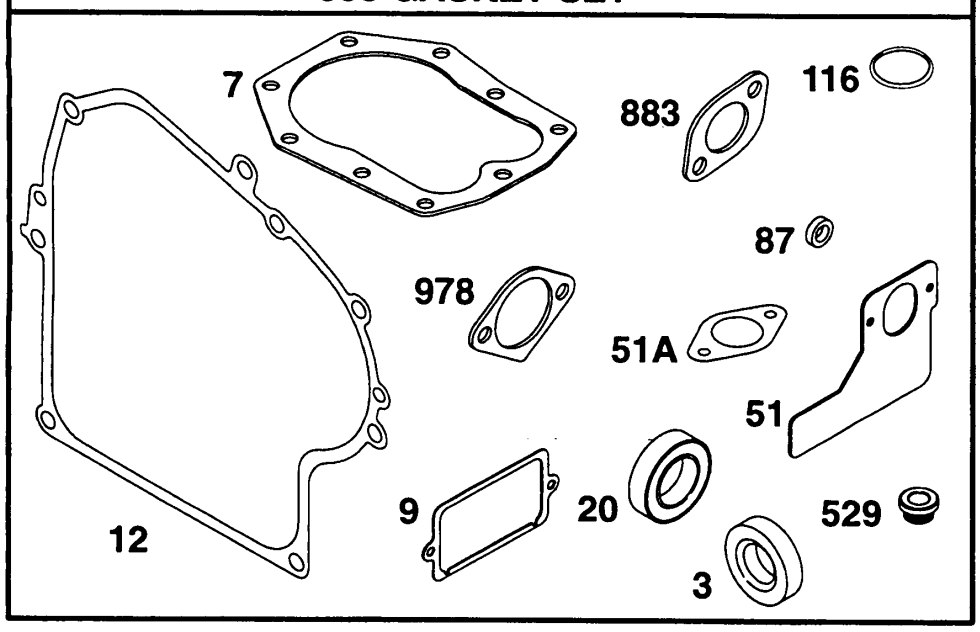

1095 VALVE OVERHAUL GASKET SET

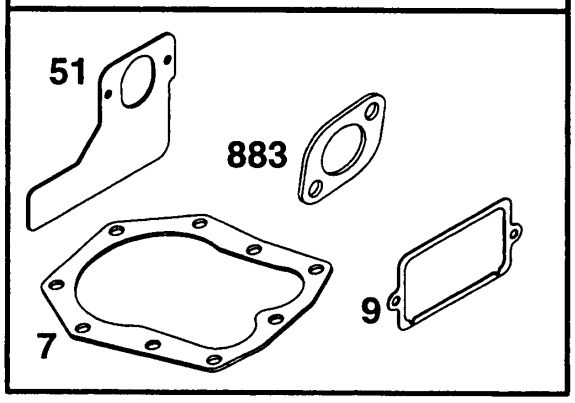

121 CARBURETOR KIT

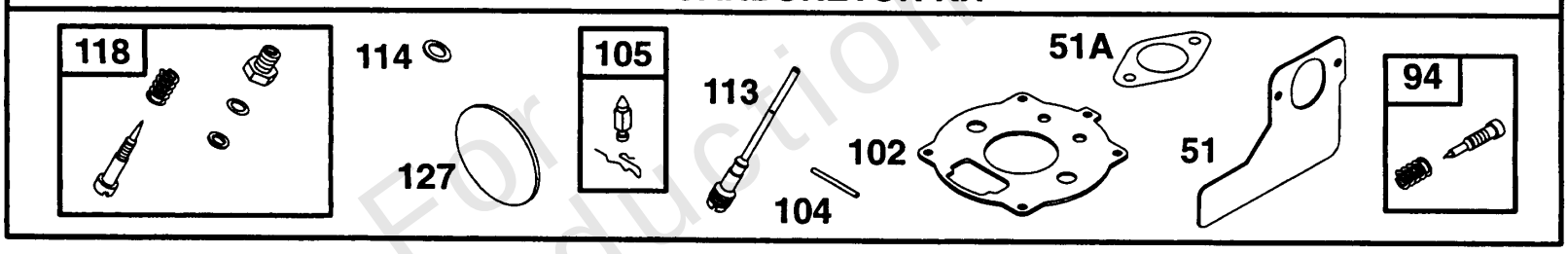

Not For Reproduction

Gasket Sets

REF NO	PART NO	QTY	DESCRIPTION
3	391086		SEAL, Oil -Included in Gasket Set-Part No. 492653
7	271866		GASKET, Cylinder Head -Included in Gasket Set-Part No. 492653. Included in Valve Overhaul Gasket Set-Part No. 498537
9	27803		GASKET, Rocker Cover -Included in Gasket Set-Part No. 492653. Included in Valve Overhaul Gasket Set-Part No. 498537
12	272125		GASKET, Crankcase -(.015) Included in Gasket Set-Part No. 492653
12	272219		GASKET, Crankcase -(.005) Included in Gasket Set-Part No. 492653
12	272220		GASKET, Crankcase -(.009) Included in Gasket Set-Part No. 492653
20	291675		SEAL, Oil -(Crankcase Cover) Included in Gasket Set-Part No. 492653
51A	498869		GASKET, Intake -Included in Gasket Set-Part No. 492653. Included in Valve Overhaul Gasket Set-Part No. 498537. Included in Carburetor Kit-See Ref. 121
51	270267		GASKET, Intake -Included in Gasket Set-Part No. 492653. Included in Carburetor Kit-See Ref. 121
87	491323		SEAL, Governor Shaft -Included in Gasket Set-Part No. 492653
94	292681		VALVE, Idle Mixture -Included in Carburetor Kit-See Ref. 121
102	270268		GASKET, Carburetor Body -Included in Carburetor Kit-See Ref. 121
104	230896		PIN, Float Hinge -Included in Carburetor Kit-See Ref. 121
105	394681		KIT, Needle/Seat -(Gravity Feed) Included in Carburetor Kit-See Ref. 121
105	394682		KIT, Needle/Seat -(Gravity Feed)
105	394683		KIT, Needle/Seat -(Pump Feed)
113	390950		NOZZLE, Carburetor -Used Before Code Date 81060200
113	394730		NOZZLE, Carburetor -(Labeled B) Included in Carburetor Kit-See Ref. 121
114	68667		WASHER -(Viton Seat) Included in Carburetor Kit-See Ref. 121
116	271170		SEAL, O-Ring -Included in Gasket Set-Part No. 492653
116	280203		SEAL, O-Ring -(Fuel Shut Off)
118	99525		VALVE, High Speed -Include(s): 22235 Washer 26336 Spring-Needle Valve 65978 Seal-O-Ring 394033 Valve-Idle Adjustment Included in Carburetor Kit-See Ref. 121
118	99525		VALVE, High Speed -Included in Carburetor Kit-See Ref. 121. Include(s): 22235 Washer 26336 Spring-Needle Valve 65978 Seal-O-Ring 394033 Valve-Idle Adjusting
121	391071		KIT, Carburetor Overhaul -Used Before Code Date 81060200
121	394989		KIT, Carburetor Overhaul
127	221747		PLUG, Welch -Included in Carburetor Kit-See Ref. 121

Not For Reproduction

Footnotes:

Included in Carburetor Kit-See Ref. 121

Copyright © Briggs & Stratton. All Rights reserved

Mfg. No: 221432-0145-01

358 GASKET SET

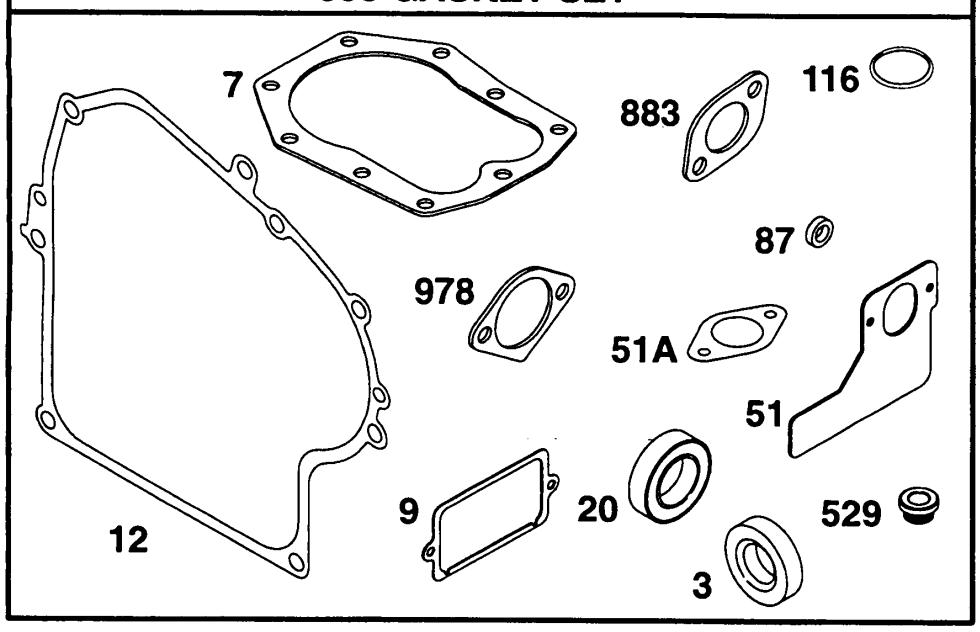

1095 VALVE OVERHAUL GASKET SET

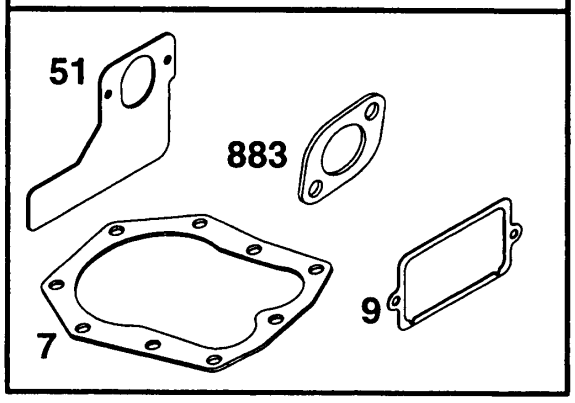

121 CARBURETOR KIT

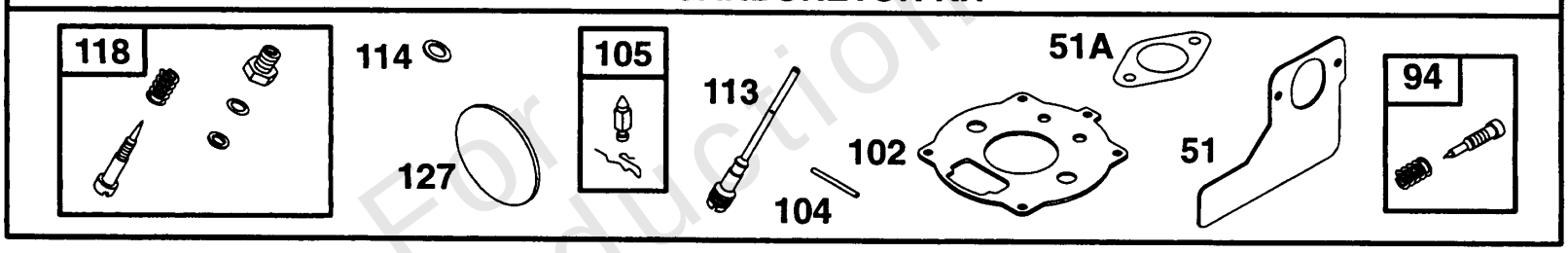

Not For Reproduction

Copyright © Briggs & Stratton. All Rights reserved

Gasket Sets

REF NO	PART NO	QTY	DESCRIPTION
358	492653		GASKET SET, Engine
529	281370		SEAL, O-Ring -Included in Gasket Set-Part No. 492653
883	272293		GASKET, Exhaust -Included in Gasket Set-Part No. 492653. Included in Valve Overhaul Gasket Set-Part No. 498537
978	271736		GASKET, Oil Guard -Included in Gasket Set-Part No. 492653
1095	498537		GASKET SET, Valve

Not For Reproduction

Footnotes:

Included in Carburetor Kit-See Ref. 121

Copyright © Briggs & Stratton. All Rights reserved

Gear Reducer Assy, Sno Gard

Mfg. No: 221432-0145-01

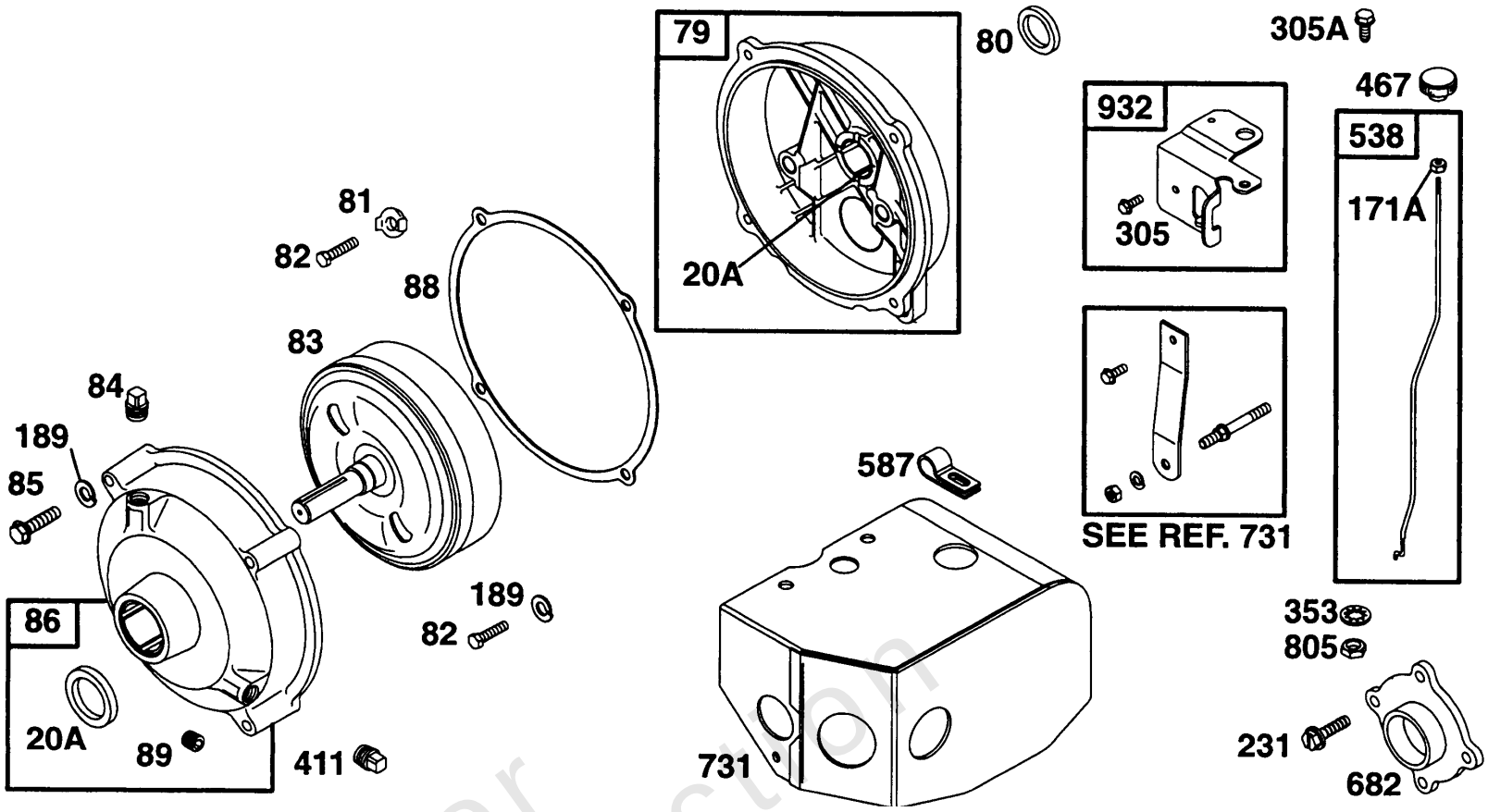

Not For Reproduction

Gear Reducer Assy, Sno Gard

REF NO	PART NO	QTY	DESCRIPTION
20A	391086		SEAL, Oil -Included in Gasket Set-Part No. 492653
79	296179		CASE, Gear Reduction
80	27884		GASKET, Gear Cover/Housing
81	220234		LOCK, Muffler Screw
82	92502		SCREW
83	495985		SHAFT, Auxiliary Drive
84	94918		PLUG, Breather
85	91386		SCREW -(2)
86	296053		COVER, Gear
88	27328		GASKET, Gear Cover/Housing
89	91488		PLUG -(1/8)
171A	90356		NUT -(10-24)
189	90366		WASHER
231	94238		SCREW
305A	94786		SCREW -(1/2)
305	93042		SCREW
305	94786		SCREW -(1/2)
353	94281		WASHER
411	94886		PLUG, Oil Drain -(Flush)
467	391908		KNOB, Air Cleaner Cover
538	396085		ROD, Governor Control
587	220162		CLIP, Wire
682	211516		SHIELD, Starter
731	399158		HOOD, Snow -Use(s): 222710 Strap-Hood 94896 Screw-Hex. (Hood to Strap) 93490 Screw-Hex. (Hood to Blower Hsg.) Certain Applications also use the Following: 94931 Stud-Hex. Drive (Strap to Crankcase Cover) 94314 Nut-Hex. 90366 Washer-Lock
731	490172		HOOD, Snow -Use(s): 223825 Strap-Hood 94896 Screw-Hex. (Hood to Strap)
731	490173		HOOD, Snow -Use(s): 223825 Strap-Hood 94896 Screw-Hex. (Hood to Strap) 93490 Screw-Hex. (Hood to Blower Hsg.) 93640 Screw-Hex. (Hood to Cyl. Head)
805	94189		NUT -(Primer)
932	396084		GUIDE, Rod

Not For Reproduction

Mfg. No: 221432-0145-01

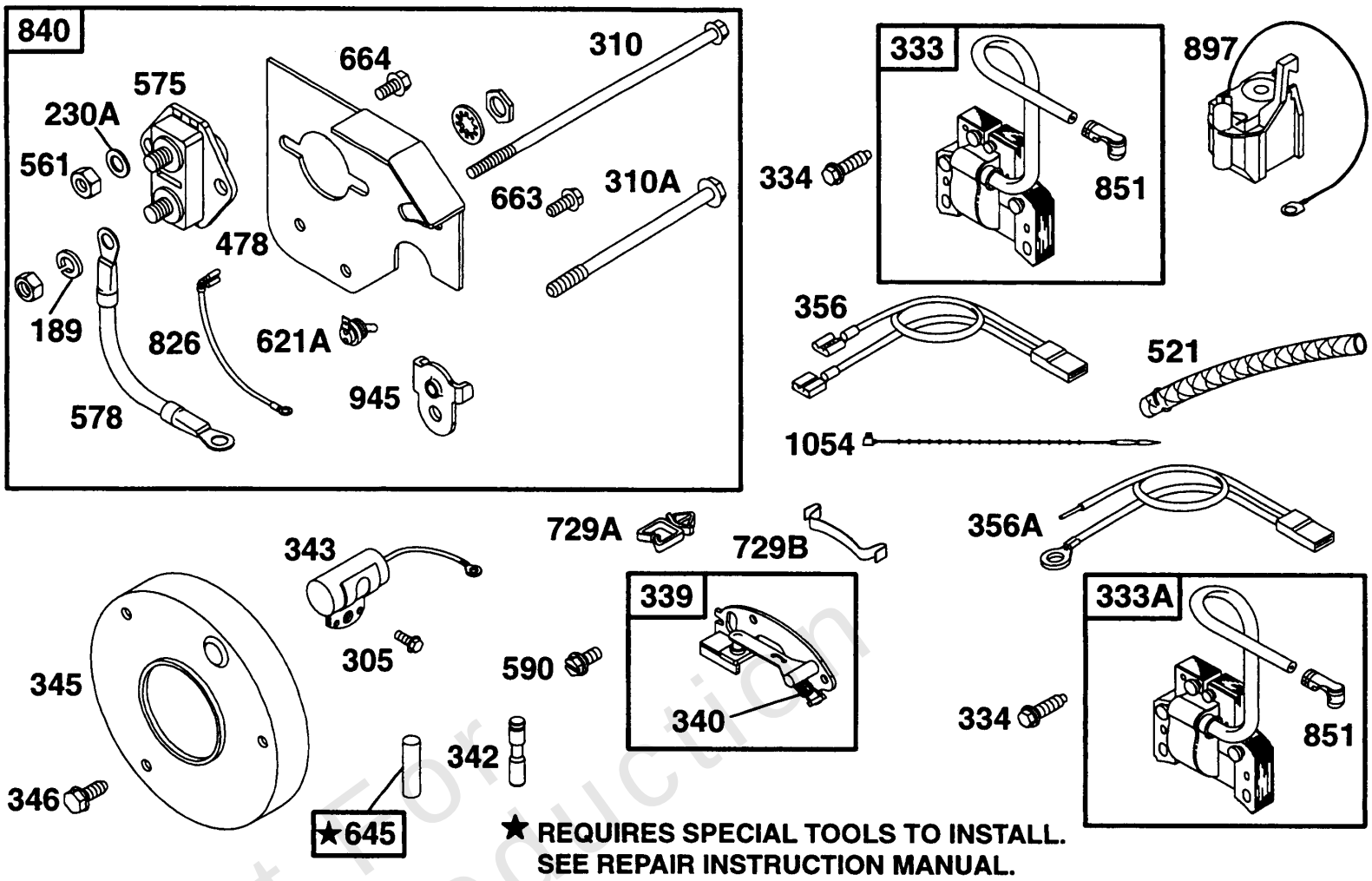

★ REQUIRES SPECIAL TOOLS TO INSTALL.
SEE REPAIR INSTRUCTION MANUAL.

Not For Reproduction

Copyright © Briggs & Stratton. All Rights reserved

Key Panel, Elect

REF NO	PART NO	QTY	DESCRIPTION
189	90366		WASHER
230A	91325		WASHER
305	93042		SCREW
305	94786		SCREW -(1/2)
310A	94169		SCREW -(4 1/2 Housing)
310	94003		SCREW -(3 5/8 Housing)
333A	298968		ARMATURE, Magneto -(Breaker Ignition)
333	398811		ARMATURE, Magneto -(Magnetron Ignition)
334	94731		SCREW -(Magneto)
339	391284		BREAKER, Ignition
340	26018		SPRING, Breaker Arm
342	65704		PLUNGER, Breaker
343	29861		CONDENSER
345	222517		COVER, Breaker
346	94896		SCREW -(Muffler Deflector)
356A	398808		WIRE, Stop -(Cut To Required Length)
356	491391		WIRE, Stop
478	395410		KIT, Panel
521	291508		SHIELD, Protective
561	92278		NUT -(Starting Switch)
575	299139		SWITCH, Starting
575	396691		SWITCH, Rotary -(Mechanical Governor)
578	392683		CABLE, Starter
590	93226		SCREW
621A	297472		SWITCH, Stop -Used Before Code Date 85041400
621A	496590		SWITCH, Toggle -Use(s): 93888 Nut-Hex.
621A	396847		SWITCH, Stop
645	23513		BUSHING, Plunger -(Used only with Breaker Point Ignition)
663	94620		SCREW -(Control Panel)
664	93415		SCREW -(1/4-20 X 3/4)
729B	221907		CLIP, Wire
729A	280590		CLIP, Wire
826	393706		HARNESS, Wiring -(Briggs & Stratton 110V)
826	397674		WIRE, Stop -(Starter Switch to Ground Wire Terminal)
840	395408		KIT, Panel -(Toggle Switch)
851	493880		TERMINAL, Spark Plug
897	394970		KIT, Magnetron Ignition
945	223159		BRACKET, Starter Motor

Not For Reproduction

Copyright © Briggs & Stratton. All Rights reserved

Key Panel, Elect

Mfg. No: 221432-0145-01

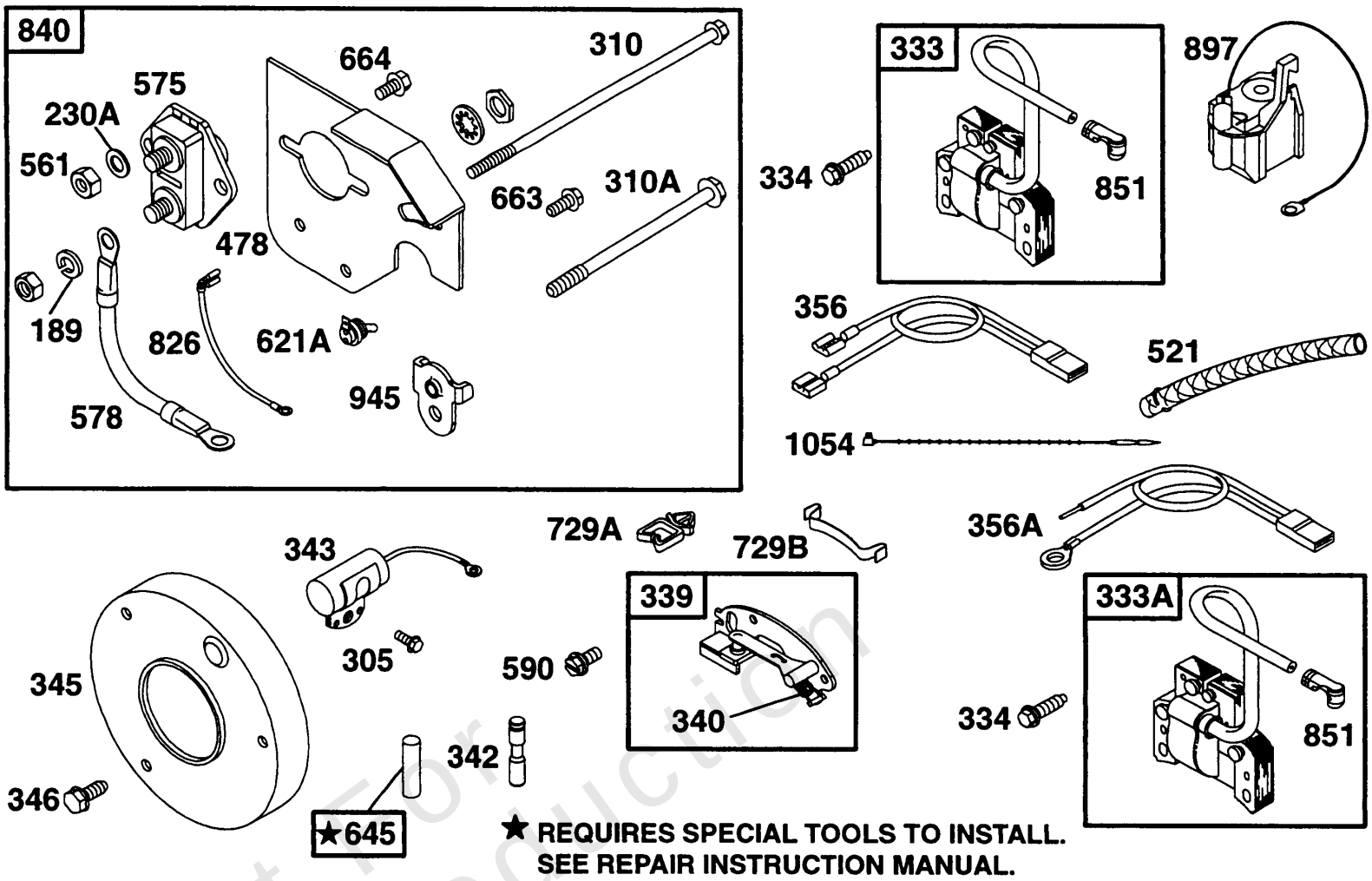

★ REQUIRES SPECIAL TOOLS TO INSTALL.
SEE REPAIR INSTRUCTION MANUAL.

Not For Reproduction

Copyright © Briggs & Stratton. All Rights reserved

Key Panel, Elect

REF NO	PART NO	QTY	DESCRIPTION
1054	270723		TIE, Cable
1054	280275		TIE, Cable

Not For Reproduction

Copyright © Briggs & Stratton. All Rights reserved

Oil Fill, Oil Gard

Mfg. No: 221432-0145-01

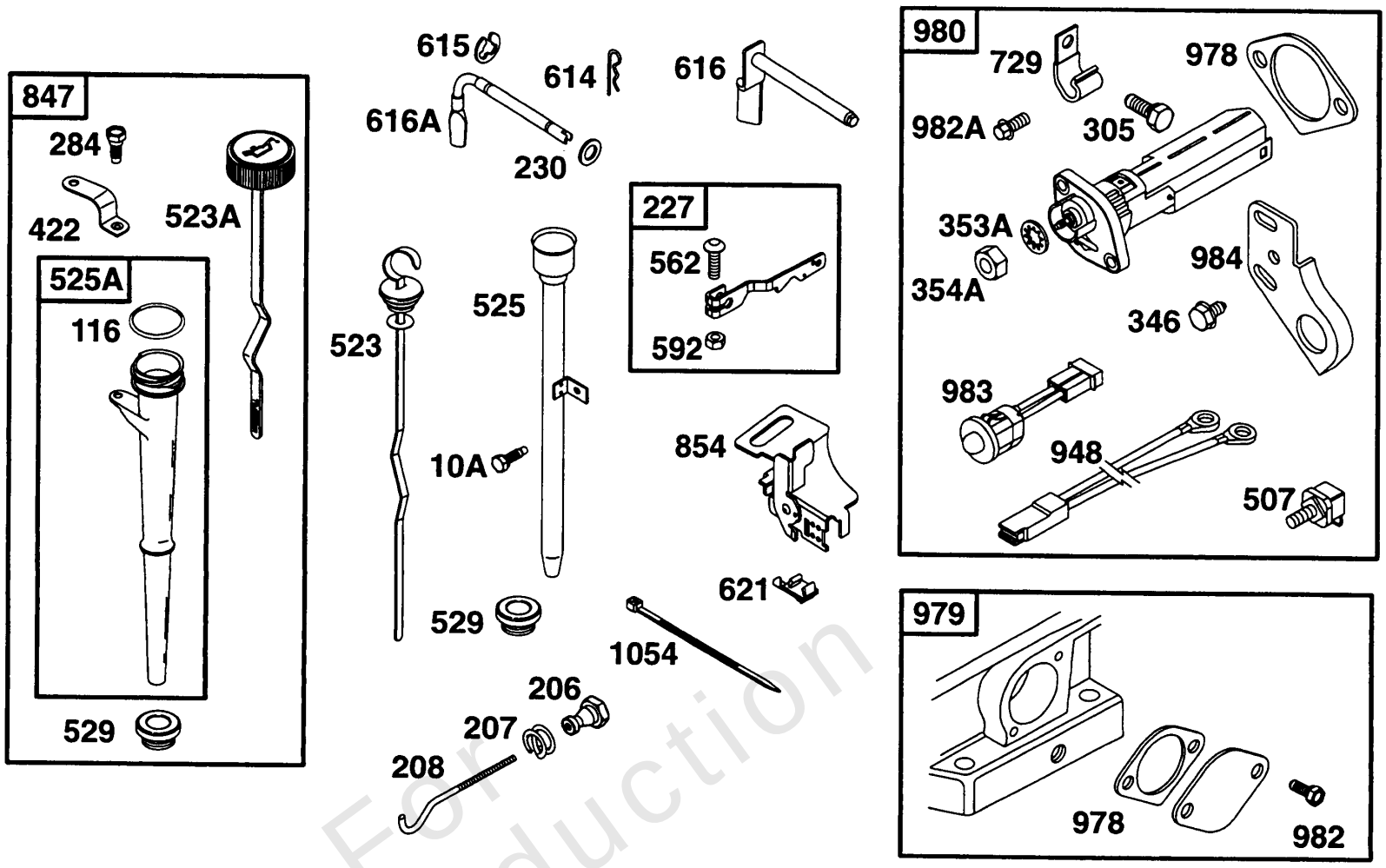

Not For Reproduction

Oil Fill, Oil Gard

REF NO	PART NO	QTY	DESCRIPTION
10A	94930		SCREW -(Cylinder Shield)
116	271170		SEAL, O-Ring -Included in Gasket Set-Part No. 492653
116	280203		SEAL, O-Ring -(Fuel Shut Off)
206	230149		NUT, Governor Adjusting -(5-44) -Used Before Code Date 83121600
206	231266		NUT, Governor Adjusting -(6-32)
207	26855		SPRING, Governor Link
208	231062		ROD, Governor Control -Used Before Code Date 83121600
208	261959		ROD, Governor Control
227	391732		LEVER, Governor Control -(1/4 Diameter) -Used Before Code Date 83121600
227	396775		LEVER, Governor Control
230	94927		WASHER -(Governor Lever)
284	93886		SCREW
305	93042		SCREW
305	94786		SCREW -(1/2)
346	94896		SCREW -(Muffler Deflector)
353A	92791		WASHER
354A	90576		NUT -(Ground Terminal)
422	225111		BRACKET, Oil Fill
507	398525		INSULATOR
523A	497214		DIPSTICK
523	490665		DIPSTICK
525A	495347		TUBE, Dipstick
525	496517		TUBE, Dipstick
529	281370		SEAL, O-Ring -Included in Gasket Set-Part No. 492653
562	94907		BOLT
592	231978		NUT
592	92278		NUT -(Starting Switch)
592	94726		NUT
614	93306		PIN, Cotter
615	93307		RETAINER, Governor Shaft
616A	231057		CRANK, Governor -(1/4 Diameter)
616	495241		CRANK, Governor
621	297472		SWITCH, Stop
729	223528		CLIP -(Retainer)
847	497458		DIPSTICK/TUBE ASSEMBLY
854	392884		BRACKET, Stopswitch

Not For Reproduction

Footnotes:

Included in Carburetor Kit-See Ref. 121

Copyright © Briggs & Stratton. All Rights reserved

Oil Fill, Oil Gard

Mfg. No: 221432-0145-01

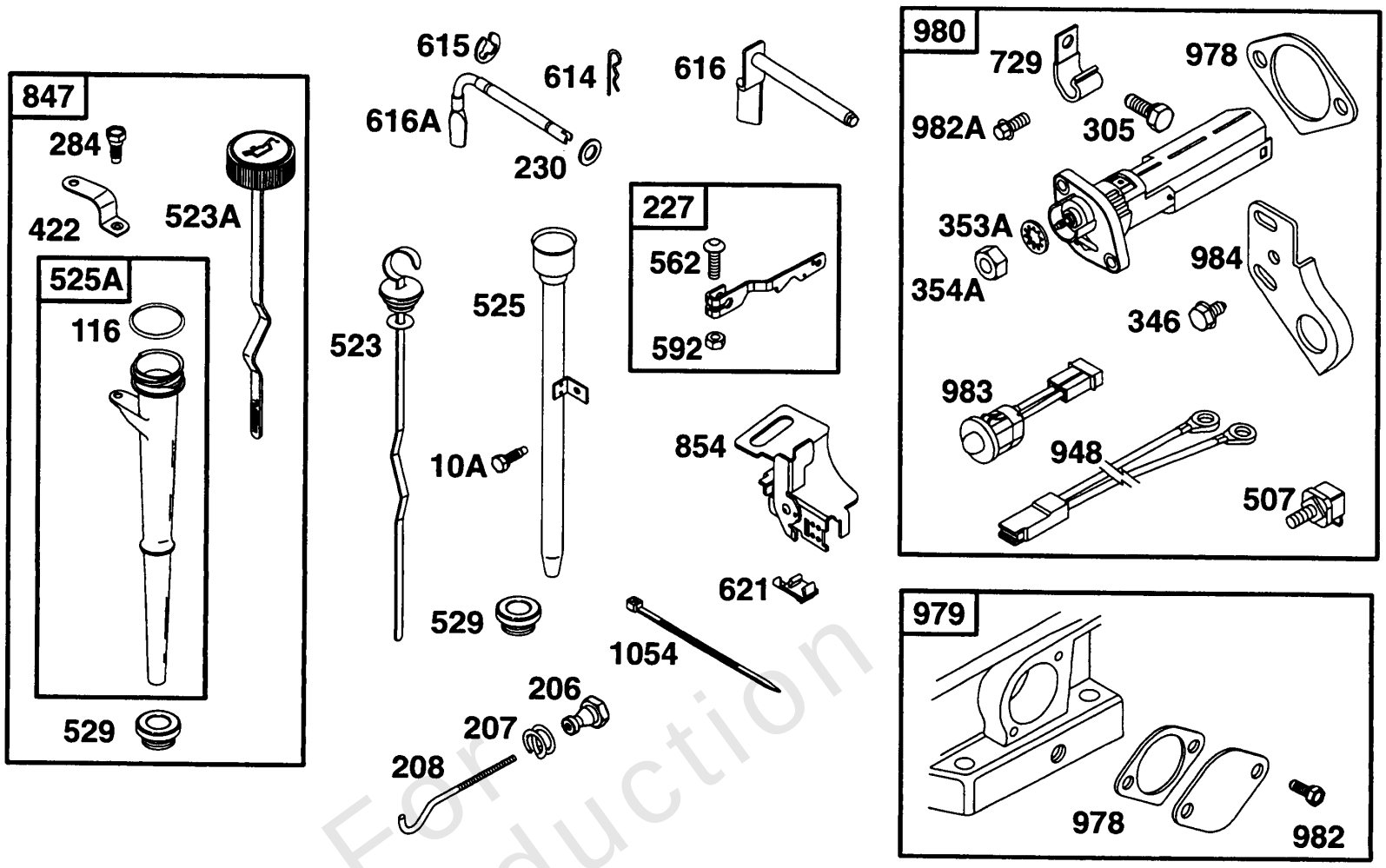

Not For Reproduction

Copyright © Briggs & Stratton. All Rights reserved

Oil Fill, Oil Gard

REF NO	PART NO	QTY	DESCRIPTION
948	398661		HARNESS, Wiring
978	271736		GASKET, Oil Guard -Included in Gasket Set-Part No. 492653
979	494807		COVER, Oil Guard
980	398182		KIT, Oil Gard
982A	94657		SCREW
982	94658		SCREW
983	398660		LIGHT, Indicator -(Mounting With Light Bracket)
984	223773		BRACKET, Oil Guard Light
1054	270723		TIE, Cable
1054	280275		TIE, Cable

Not For Reproduction

Footnotes:

Included in Carburetor Kit-See Ref. 121

Copyright © Briggs & Stratton. All Rights reserved

Mfg. No: 221432-0145-01

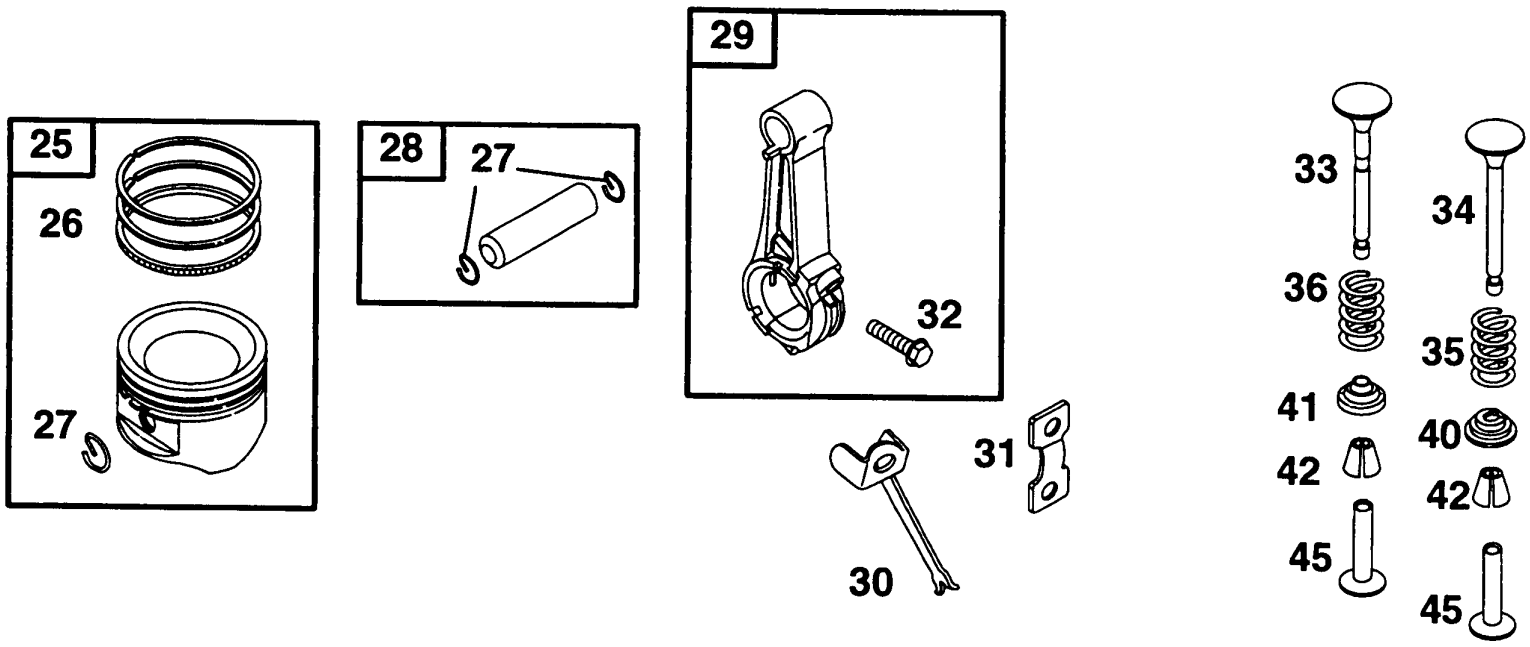

Not For Reproduction

Copyright © Briggs & Stratton. All Rights reserved

Piston Grp

REF NO	PART NO	QTY	DESCRIPTION
25	394661		PISTON ASSEMBLY -(Standard)
25	394662		PISTON ASSEMBLY -(.010 Oversize)
25	394663		PISTON ASSEMBLY -(.020 Oversize)
25	394664		PISTON ASSEMBLY -(.030 Oversize)
26	391780		SET, Ring -(Standard)
26	391781		SET, Ring -(.010 Oversize)
26	391782		SET, Ring -(.020 Oversize)
26	391783		SET, Ring -(.030 Oversize)
26	392331		SET, Ring -(Standard)
27	260924		LOCK, Piston Pin -Used Before Code Date 95101600
27	263129		LOCK, Piston Pin
28	299691		PIN, Piston -(Standard)
28	391286		PIN, Piston -(.005 Oversize) -Used Before Code Date 95101600
28	498319		PIN, Piston -(Standard)
28	498320		PIN, Piston -(.005 Oversize)
29	393860		ROD, Connecting -(Standard)
29	393861		ROD, Connecting -(.020 Undersize)
30	222329		DIPPER, Connecting Rod
31	222299		LOCK, Rod Screw
32	92909		SCREW
33	261185		VALVE, Exhaust
34	261462		VALVE, Intake
35	65906		SPRING, Valve -(Intake)
36	26828		SPRING, Valve -(Exhaust)
40	221596		RETAINER, Valve -(Valves With Groove In Stem)
41	292260		RETAINER, Valve -(Exhaust Valve) (Exhaust)
42	494553		KEEPER, Valve -(Exhaust)
45	262248		TAPPET, Valve

Not For Reproduction

Copyright © Briggs & Stratton. All Rights reserved

Replacement Engine - US & Canada

REF NO	PART NO	QTY	DESCRIPTION
	20S2320035	1	Replacement Engine
	-----		Top No-Load Speed: 3600 -Trim: 01
	-----		Top No-Load Speed: 3600 -Trim: 02
	-----		Top No-Load Speed: 2900 -Trim: 03
	-----		Service Note: If the replacement engine supersedes to or is a Model 200000 series engine, refer to the illustrations located after the conversion data for this model series.
	-----		Service Note: To make the crankshaft center line the same add 695154 spacer kit, other overall dimensions which differ, are shown in the illustrations.
	-----		Service Note: If after making a visual inspection and it is determined the Model 200000 series engine cannot be used because of equipment interference, the original engine should be repaired with a short block and/or individual parts.
	-----		Service Note: For all Go-Karts use only a Model 136200 series engine as a replacement, regardless of the original Model.

Not For Reproduction

Copyright © Briggs & Stratton. All Rights reserved

Mfg. No: 221432-0145-01

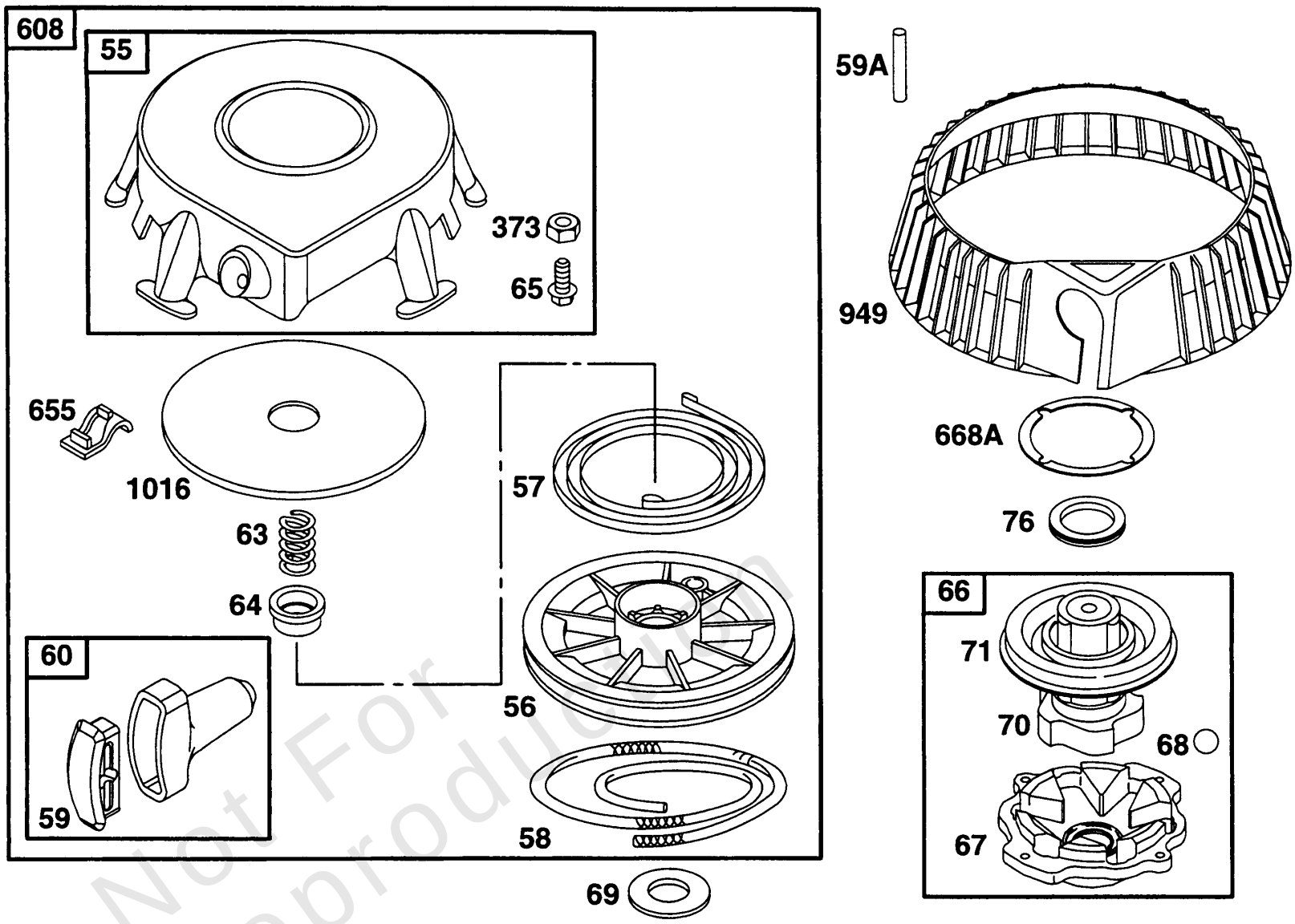

Not For Reproduction

Rewind Assy

REF NO	PART NO	QTY	DESCRIPTION
55	393576		HOUSING, Rewind Starter
56	295871		PULLEY, Starter -(63 Rope)
57	490179		SPRING-REWIND STR
58	66884		ROPE, Starter -(Cut To Required Length)
59A	230228		PIN, Starter Grip
59	490653		INSERT, Grip
60	490652		GRIP-STARTER ROPE
63	260414		SPRING, Ratchet
64	281204		ADAPTER, Ratchet Spring
65	94686		SCREW
66	399671		CLUTCH-STARTER -(Uses Rubber Coated Retainer Washer-Ref. 71)
67	394897		HOUSING, Clutch
68	63770		BALL, Clutch
69	66718		WASHER -(1-1/16 O.D. X 17/32 I.D.) (1 1/16 O.D. X 17/32 I.D.)
70	298799		RATCHET, Clutch -(engine W/Ring Gear on FW equipped for Elec Start)
71	394506		COVER, Ratchet -(Rubber Coated)
76	68238		SEAL, Ratchet
373	92987		STARTER, Rewind
608	390391		STARTER, Rewind
655	222598		ANCHOR, Rewind Spring -(Stamped Rewind Housing)
668A	225124		SPACER
949	280685		GUARD, Rewind
1016	490817		SPACER-REWIND -(Rewind)

Not For Reproduction

Copyright © Briggs & Stratton. All Rights reserved