Parts Manual

Mfg. No: 204312-1162-B9

Copyright © Briggs & Stratton. All Rights reserved

22-Jun-2026

Model Components

Page

Air Cleaner. 4
Alternator, Ignition. 6
Blower Housing/Shrouds, Flywheel, Rewind Starter. 8
Camshaft, Crankcase Cover, Crankshaft, Cylinder, Lubrication, Operator's Manual, Piston/Rings/Connecting 10
Carburetor, Kit - Carburetor Overhaul. 14
Controls, Fuel Supply, Governor Spring. 16
Cylinder Head, Gasket Sets, Valves. 20
Electric Starter, Gear Reduction. 22
Exhaust System. 24
Replacement Engine - US & Canada. 26

Not For Reproduction

Copyright © Briggs & Stratton. All Rights reserved

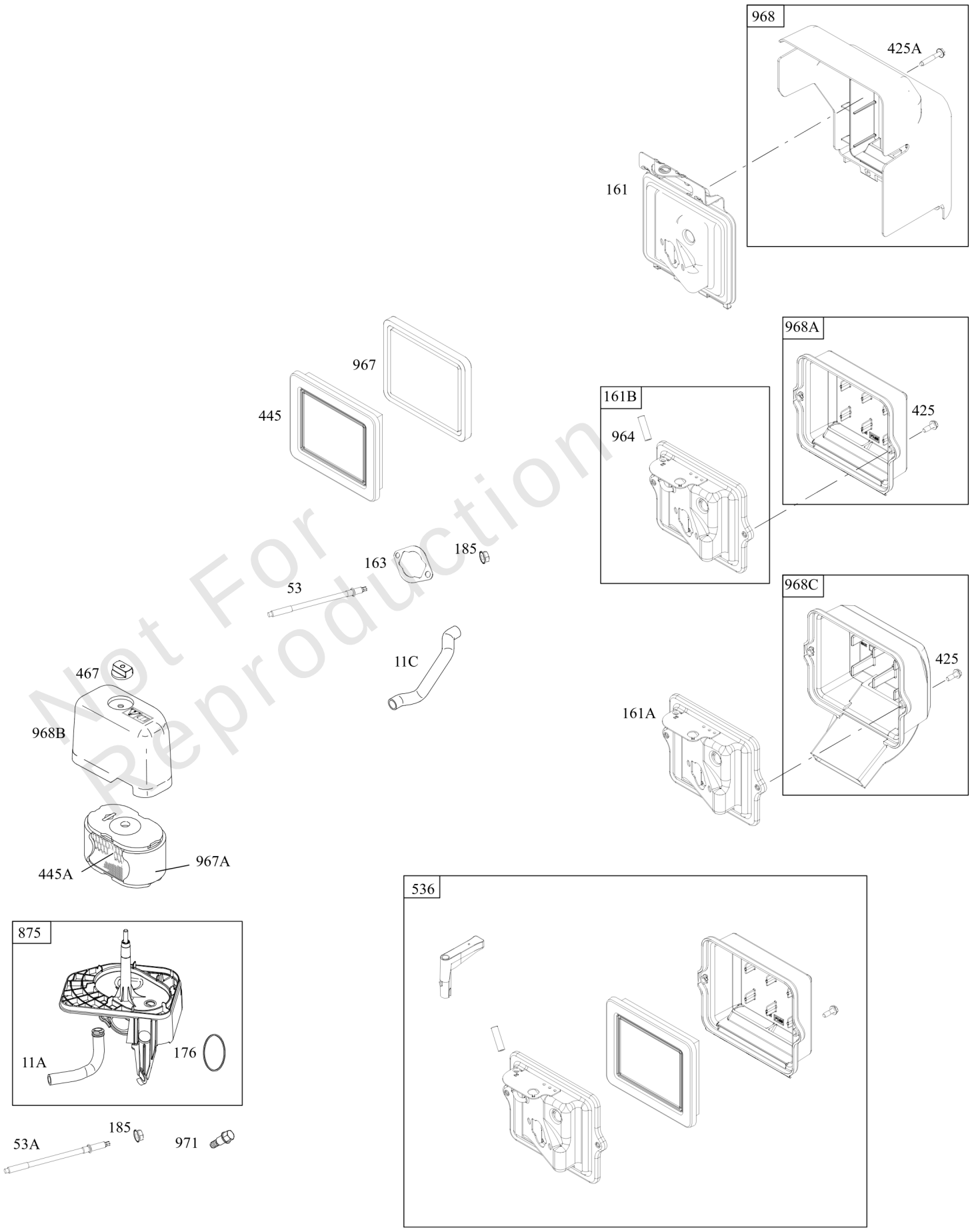

Not For Reproduction

Air Cleaner

REF NO	PART NO	QTY	DESCRIPTION
11A	695305		TUBE, Breather
11C	696796		TUBE, Breather
53	794830		STUD -(Carburetor)
161	-----		Base-Air Cleaner -(Metal) (No Longer Available)(For Replacement, Order Reference 536)
161B	591217		BASE, Air Cleaner -(Metal)
163	692277		GASKET, Air Cleaner -(Air Cleaner)
176	691917		SEAL, O-Ring -(Air Cleaner Base)
185	794838		NUT -(Air Cleaner Base)
425	794836		SCREW -(Air Cleaner Cover)
425A	794835		SCREW -(Air Cleaner Cover)
445	491588S		FILTER, A/C Cartridge
445A	695302		FILTER, A/C Cartridge
467	691668		KNOB, Air Cleaner Cover
536	591546		CLEANER, Air
875	797667		BASE, Air Cleaner -(Plastic)
964	799159		CAP, Connector
967	491435S		FILTER, Pre Cleaner
967A	695303		FILTER, Pre Cleaner
968	-----		Cover-Air Cleaner -(No Longer Available)(For Replacement, Order Reference 536)
968A	794784		COVER, Air Cleaner
968B	695301		COVER, Air Cleaner
971	794837		SCREW -(Air Cleaner Base to Carburetor)

Not For Reproduction

Alternator, Ignition

Mfg. No: 204312-1162-B9

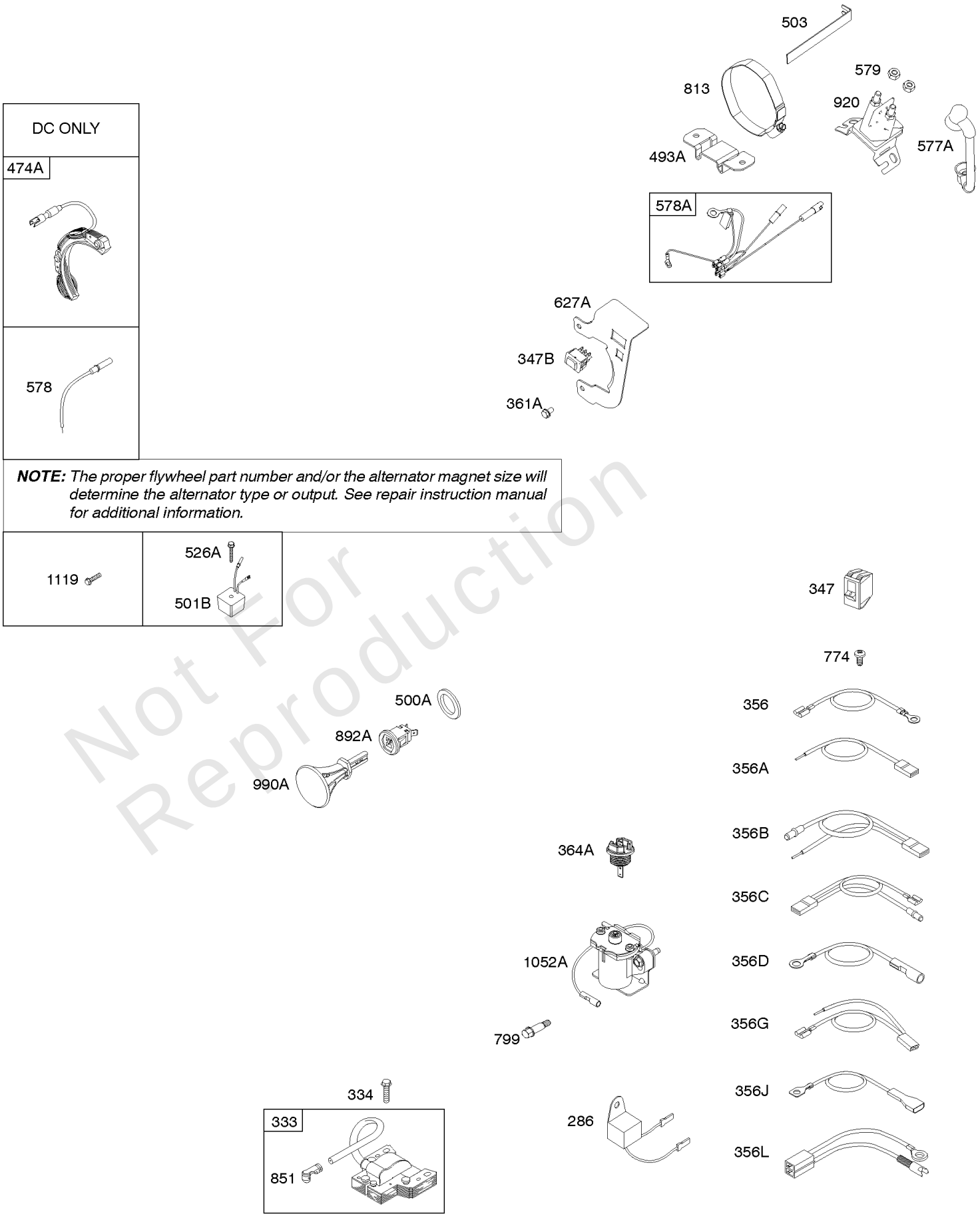

Not For Reproduction

Alternator, Ignition

REF NO	PART NO	QTY	DESCRIPTION
286	793696		MODULE, Oil Sensor
333	492341		ARMATURE, Magneto
334	699477		SCREW -(Magneto Armature)
347	697854		SWITCH, Rocker
347B	790949		SWITCH, Rocker
356	695630		WIRE, Stop
356A	692390		WIRE, Stop
356L	792609		WIRE, Stop
356D	694860		WIRE, Stop
356C	695295		WIRE, Stop
356G	697336		WIRE, Stop
356B	699340		WIRE, Stop
356J	699994		WIRE, Stop
361A	690297		SCREW -(Starting Switch)
364A	699947		TERMINAL, Oil Plug
493A	691177		BRACKET, Mounting
500A	792613		WASHER -(Key Switch)
503	691532		STRAP, Starter
526A	690326		SCREW -(Regulator)
577A	690795		CABLE, Starter
578	692306		WIRE ASSEMBLY -(1 Wire, 48-1/2" Long)(Snap Connect Female Pin Socket, And Bare WireEnd)
578A	790948		WIRE ASSEMBLY
579	691029		NUT -(Starter Cable)
627A	792608		BRACKET, Stopswitch
774	695447		SCREW -(Stop Wire)
799	699691		SCREW -(Oil Sensor)
799	794937		SCREW -(Oil Sensor) (Shoulder Screw)
813	690635		CLAMP
851	692424		TERMINAL, Spark Plug
892A	791944		SWITCH, Key
920	691656		SOLENOID, Starter
990A	794696		KEY SET
1052A	794805		SENSOR, Oil
1119	699772		SCREW -(Alternator)

Not For Reproduction

Copyright © Briggs & Stratton. All Rights reserved

Blower Housing/Shrouds, Flywheel, Rewind Starter

Mfg. No: 204312-1162-B9

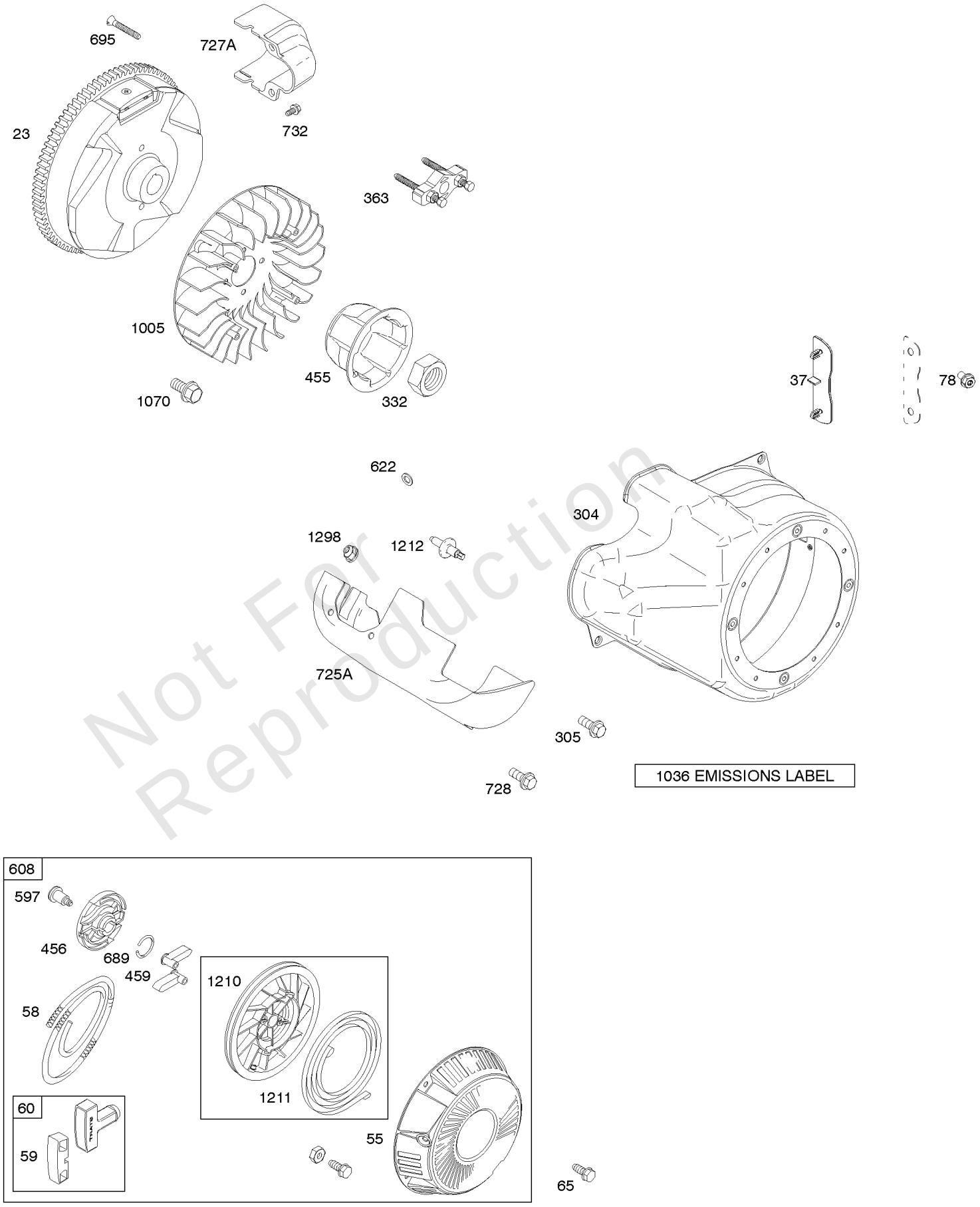

Not For Reproduction

Blower Housing/Shrouds, Flywheel, Rewind Starter

REF NO	PART NO	QTY	DESCRIPTION
23	794814		FLYWHEEL
37	795715		GUARD, Flywheel
55	695288		HOUSING-REWIND STR
58	693389		ROPE, Starter -(Cut To Required Length)
59	805957		INSERT, Grip
60	490652		GRIP-STARTER ROPE
65	699228		SCREW -(Rewind Starter)
78	795026		SCREW -(Flywheel Guard)
304	591545		HOUSING, Blower -Used After Code Date 12012300
304	795699		HOUSING, Blower -Used Before Code Date 12012400
305	699481		SCREW -(Blower Housing)
332	794824		NUT -(Flywheel)
363	19203		PULLER, Flywheel
455	794867		CUP, Flywheel
456	692299		PLATE-PAWL FRICTION
459	281505S		PAWL-RATCHET
597	691696		SCREW -(Pawl Friction Plate)
608	695287		STARTER-REWIND
622	794839		WASHER -(Heat Shield)
689	691855		SPRING-FRICTION
695	698807		SCREW -(Ring Gear)
725A	795886		SHIELD, Heat -Used After Code Date 11020600
725A	792995		SHIELD, Heat -Used Before Code Date 11020700
727A	697465		COVER, Starter Drive
728	699481		SCREW -(Heat Shield)
732	699200		SCREW -(Starter Drive Cover)
1005	794815		FAN, Flywheel
1036	-----		LABEL, Emissions -(Available From A Briggs & Stratton Authorized Dealer)
1070	794821		SCREW -(Flywheel Fan)
1210	498144		PULLEY/SPRING ASSY -(Pulley)
1211	498144		PULLEY/SPRING ASSY -(Spring)
1212	794841		STUD -(Blower Housing)
1298	794838		NUT -(Shield-Heat)

Not For Reproduction

Copyright © Briggs & Stratton. All Rights reserved

1319 WARNING LABEL	1319A WARNING LABEL	1036 EMISSIONS LABEL
REQUIRED *when replacing parts with warning labels affixed.*	***REQUIRED*** *when replacing parts with warning labels affixed.*	

1058 OPERATOR'S MANUAL	1330 REPAIR MANUAL
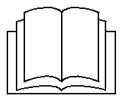	

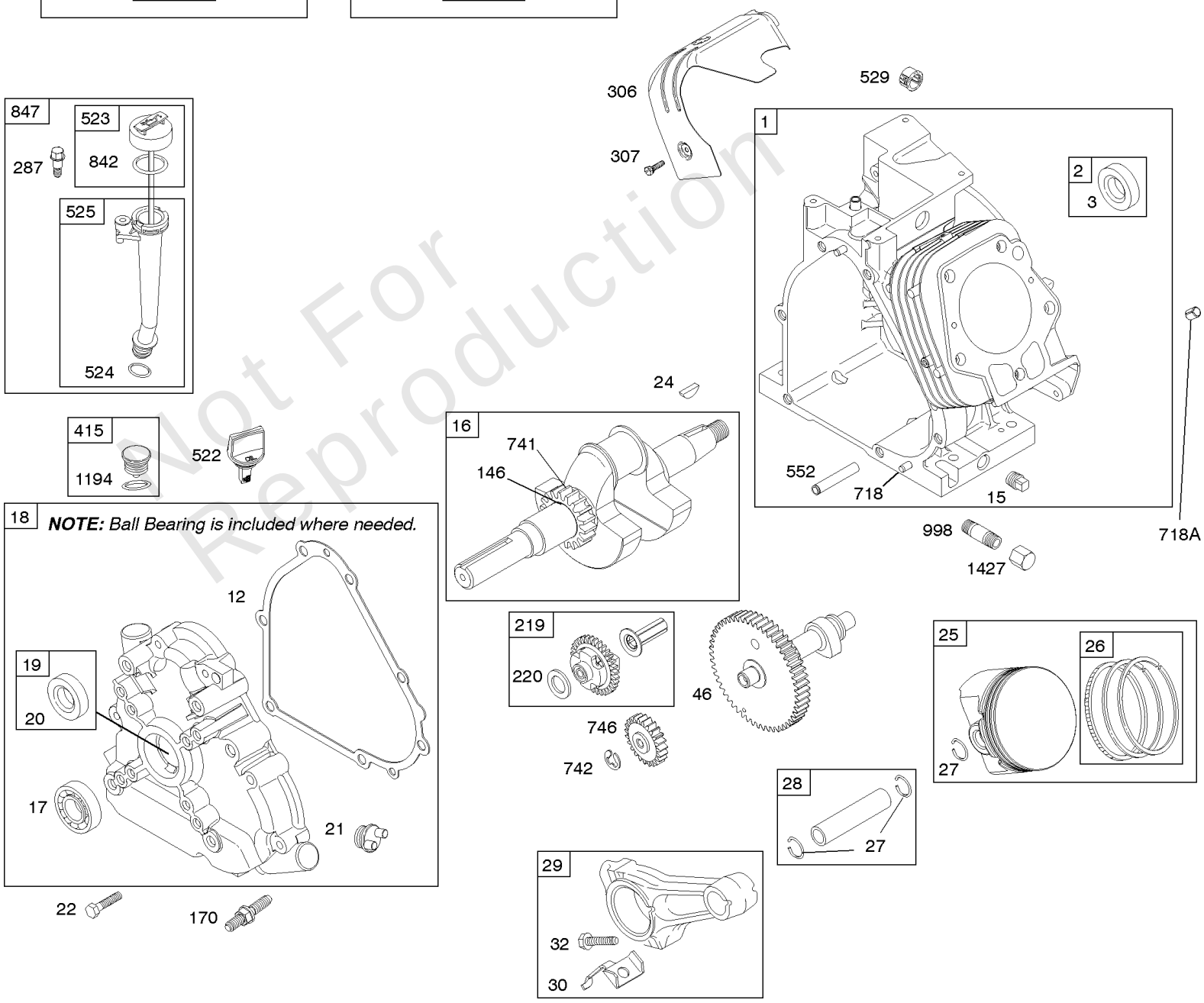

Not For Reproduction

REF NO	PART NO	QTY	DESCRIPTION
1	794849		CYLINDER ASSEMBLY
2	698340		KIT, Bushing/Seal -(Magneto Side)
3	391086S		SEAL, Oil -(Magneto Side)
12	694953		GASKET, Crankcase
15	691686		PLUG-OIL DRAIN -(Square Head)
16	794718		CRANKSHAFT
17	695434		BEARING, Ball
18	791965		COVER, Crankcase
19	698340		KIT, Bushing/Seal -(PTO Side)
20	391086S		SEAL, Oil -(PTO Side)
21	281658S		CAP, Oil Fill
22	794825		SCREW -(Crankcase Cover/Sump)
24	222698S		KEY, Flywheel
25	792144		PISTON ASSEMBLY -(.020 Oversize)
25	792117		PISTON ASSEMBLY -(Standard)
26	792026		SET, Ring -(Standard)
26	792073		SET, Ring -(.020" Oversize)
27	690975		LOCK, Piston Pin
28	696581		PIN, Piston -(Standard)
29	694691		ROD, Connecting
30	694692		DIPPER, Connecting Rod
32	690976		SCREW -(Connecting Rod)
46	795697		CAMSHAFT
146	690979		KEY, Woodruff
170	794833		STUD -(Crankcase Cover/Sump)
219	693578		GEAR, Governor
220	691724		WASHER -(Governor Gear)
287	699234		SCREW -(Dipstick Tube)
306	697240		SHIELD, Cylinder
307	794822		SCREW -(Cylinder Shield)
415	691363		PLUG
522	697689		PLUG, Dipstick/Fill
523	695344		DIPSTICK
524	691876		SEAL, O-Ring
525	695343		TUBE, Dipstick
529	791822		GROMMET
552	694674		BUSHING, Governor Crank
718	690959		PIN, Locating
718A	695178		PIN, Locating -(Head)

Not For Reproduction

Copyright © Briggs & Stratton. All Rights reserved

1319 WARNING LABEL	1319A WARNING LABEL	1036 EMISSIONS LABEL
REQUIRED *when replacing parts with warning labels affixed.*	***REQUIRED*** *when replacing parts with warning labels affixed.*	

1058 OPERATOR'S MANUAL	1330 REPAIR MANUAL
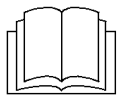	

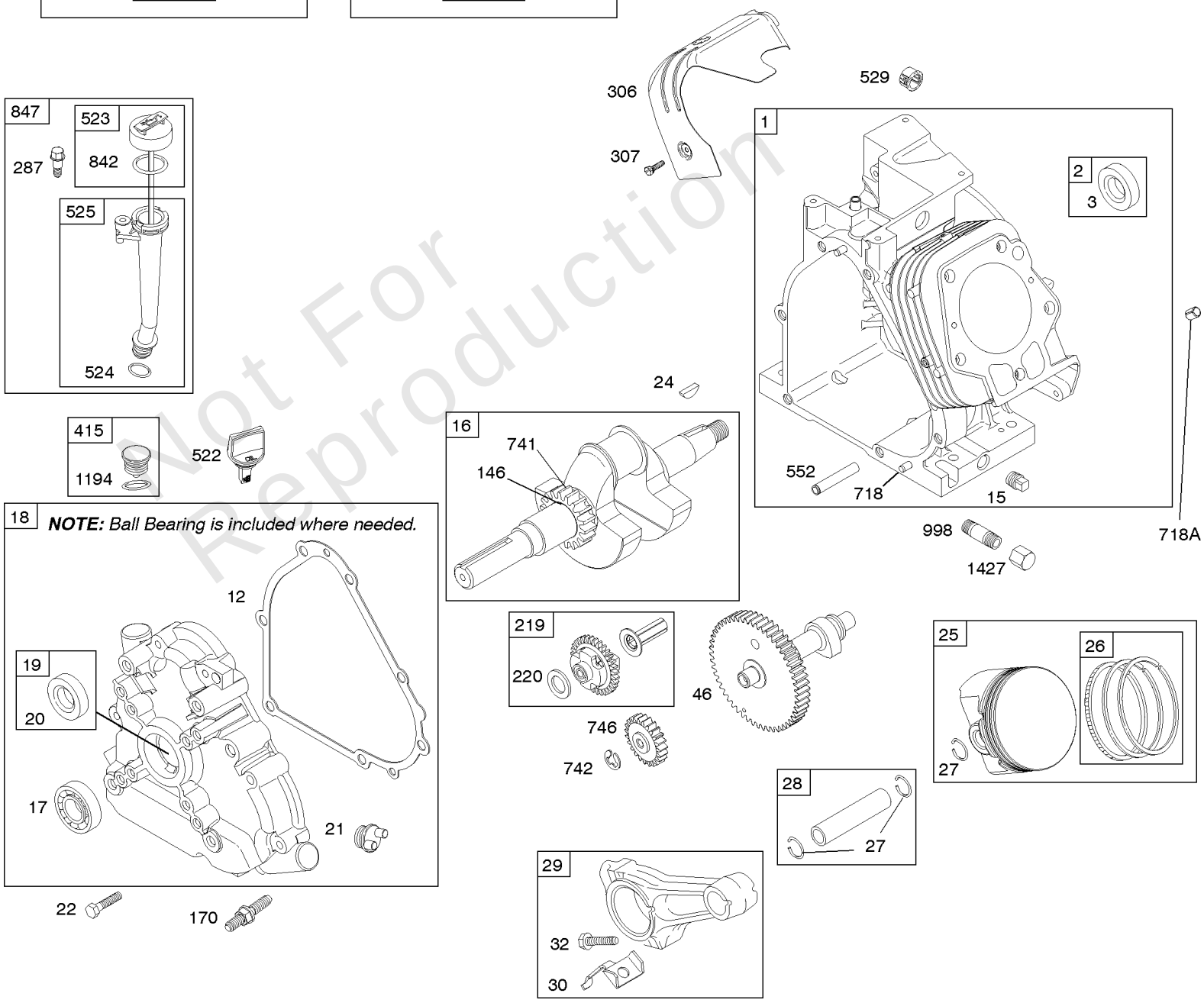

Not For Reproduction

REF NO	PART NO	QTY	DESCRIPTION
741	691288		GEAR, Timing
742	692564		RETAINER, E Ring
746	694679		GEAR, Idler
842	691031		SEAL, O-Ring -(Dipstick Tube)
847	695342		DIPSTICK/TUBE ASSEMBLY
998	696683		PIPE, Oil
1036	-----		LABEL, Emissions -(Available From A Briggs & Stratton Authorized Dealer)
1058	277040		MANUAL, Operator's
1194	691876		SEAL, O-Ring -(Plug)
1319	794467		LABEL, Warning
1319A	797669		LABEL, Warning
1330	276781		MANUAL, Repair
1427	695757		PLUG, Oil Drain

Not For Reproduction

Copyright © Briggs & Stratton. All Rights reserved

Carburetor, Kit - Carburetor Overhaul

Mfg. No: 204312-1162-B9

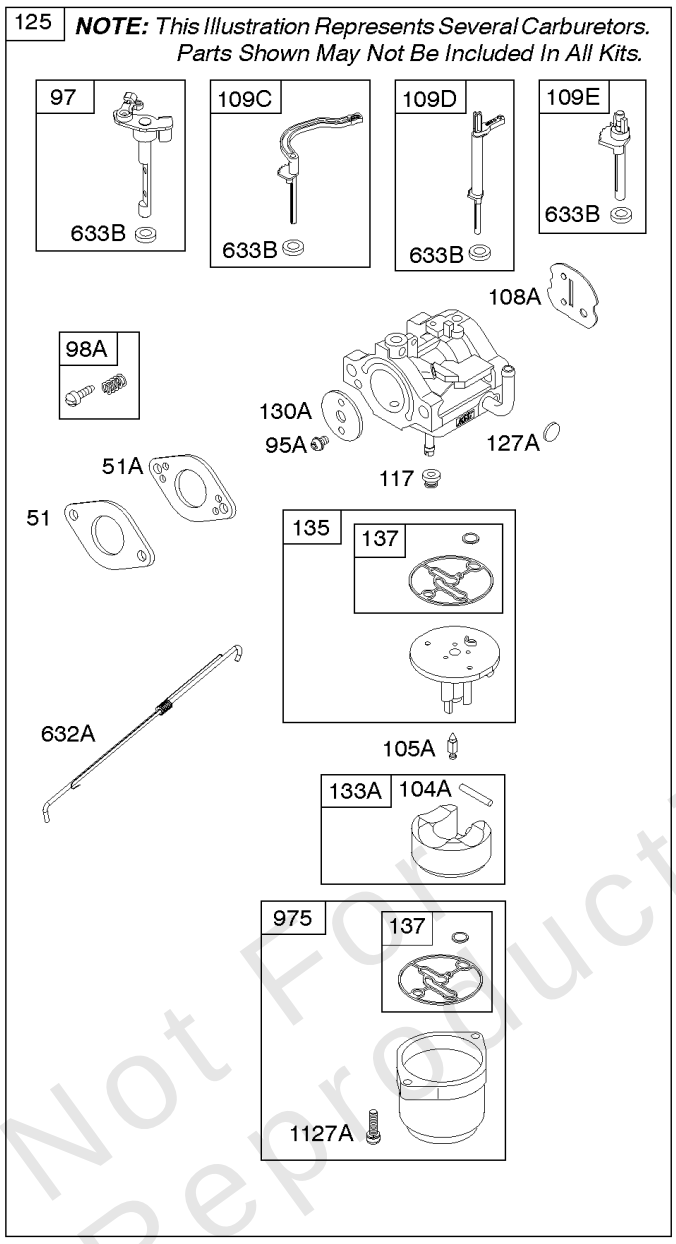

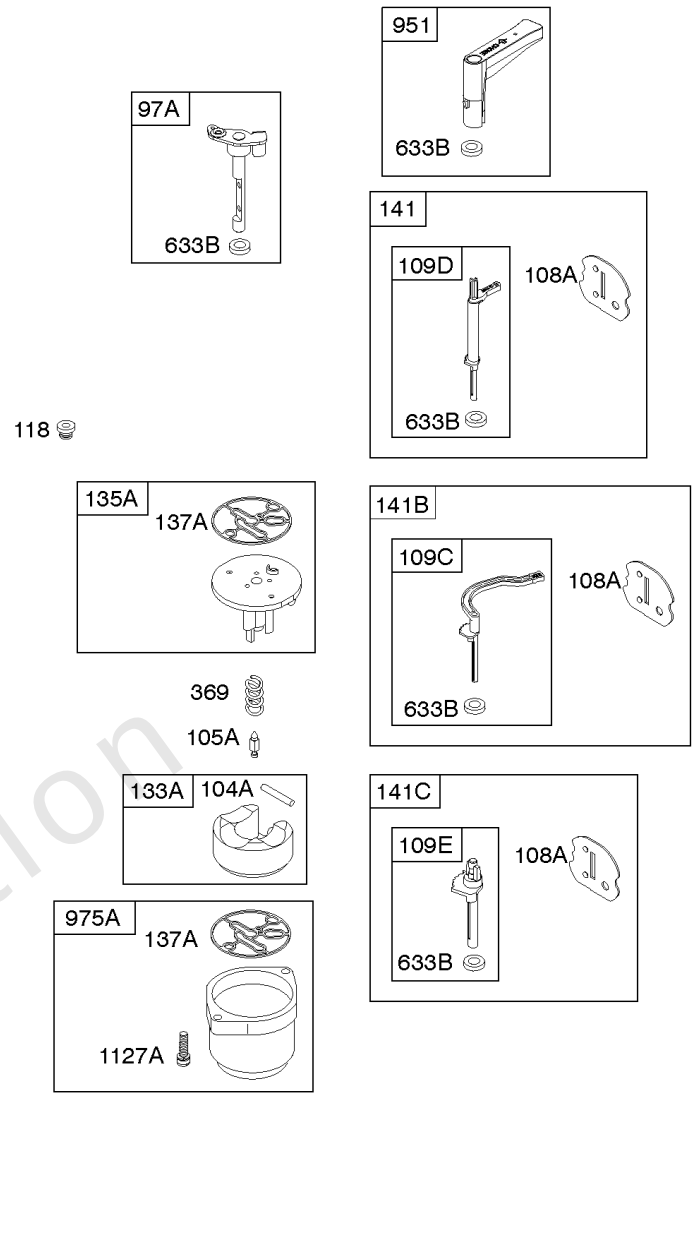

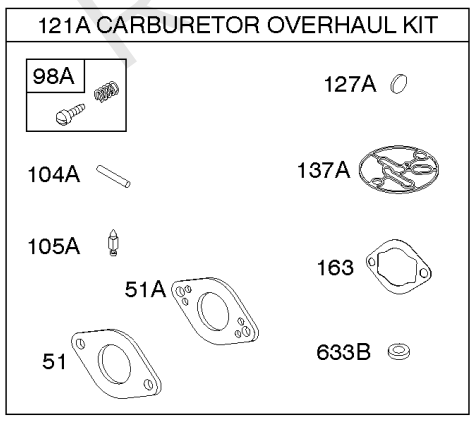

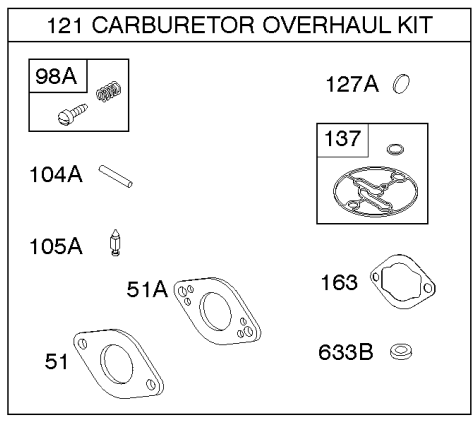

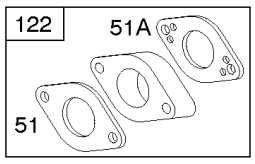

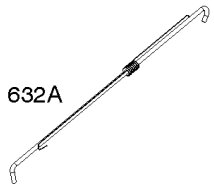

Not For Reproduction

Carburetor, Kit - Carburetor Overhaul

REF NO	PART NO	QTY	DESCRIPTION
51	694874		GASKET, Intake
51A	694875		GASKET, Intake
95A	690718		SCREW -(Throttle Valve)
97	796334		SHAFT, Throttle
97A	696387		SHAFT, Throttle
98A	695408		KIT, Idle Speed
104A	694918		PIN, Float Hinge
105A	696136		VALVE, Float Needle
108A	696143		VALVE, Choke
109D	790149		SHAFT, Choke
109E	696735		SHAFT, Choke
117	796080		JET, Main -(Standard) -Used After Code Date 08071700
117	696134		JET, Main -(Standard) -Used Before Code Date 08071800
118	796128		JET, Main -(High Altitude) -Used After Code Date 08071700
118	696135		JET, Main -(High Altitude) -Used Before Code Date 08071800
121	796137		KIT, Carburetor Overhaul
121A	696146		KIT, Carburetor Overhaul
122	694876		SPACER, Carburetor
125	796321		CARBURETOR
127A	690727		PLUG, Welch
130A	696139		VALVE, Throttle
133A	694914		FLOAT, Carburetor
135	698780		TUBE, Fuel Transfer
135A	696142		TUBE, Fuel Transfer
137	698781		GASKET, Float Bowl
137A	695426		GASKET, Float Bowl
141	696145		KIT, Choke Shaft
141C	699979		KIT, Choke Shaft
163	692277		GASKET, Air Cleaner -(Air Cleaner)
369	695422		SPRING, Float Bowl
632	695917		SPRING/LINK, Mechanical Governor -Used Before Code Date 08071800
632A	796324		SPRING/LINK, Mechanical Governor -Used After Code Date 08071700
633B	690998		SEAL, Choke/Throttle Shaft
951	699961		LEVER, Choke
975	698783		BOWL, Float -Used After Code Date 08071700
975A	696138		BOWL, Float -Used Before Code Date 08071800
1127A	695407		SCREW -(Float Bowl) (Float Bowl to Carburetor Body)

Not For Reproduction

Copyright © Briggs & Stratton. All Rights reserved

Controls, Fuel Supply, Governor Spring

Mfg. No: 204312-1162-B9

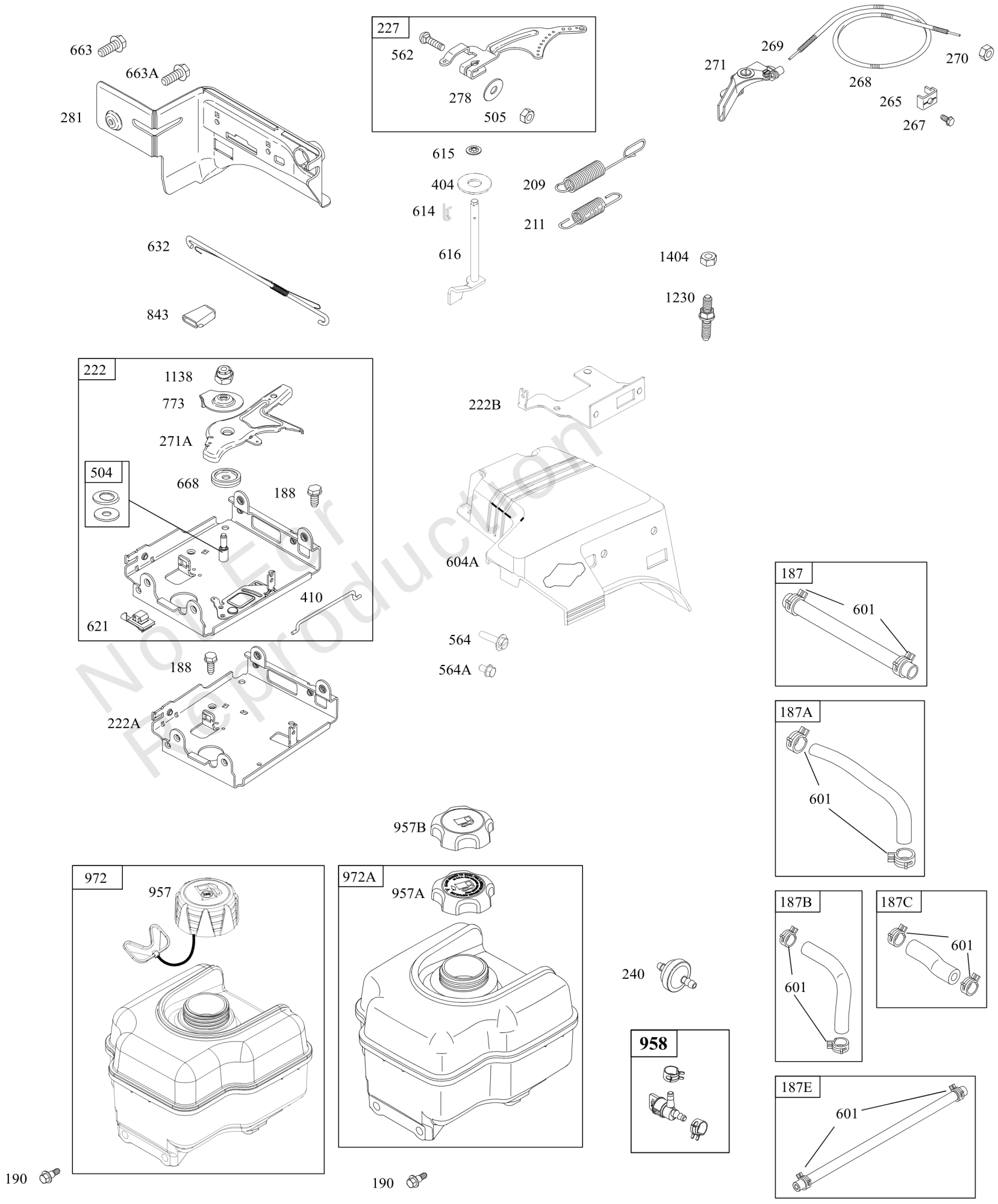

Not For Reproduction

Controls, Fuel Supply, Governor Spring

REF NO	PART NO	QTY	DESCRIPTION
187	791766		LINE, Fuel -(15" Long)(Cut to Required Length)
187A	791869		LINE, Fuel
187C	791871		LINE, Fuel
187E	791745		LINE, Fuel -(23 Inches)(Cut To Required Length)
187B	791834		LINE, Fuel
188	699479		SCREW -(Control Bracket)
190	699220		SCREW -(Fuel Tank)
209	694867		SPRING, Governor
211	695307		SPRING, Governed Idle
222A	794801		BRACKET, Control
227	694864		LEVER, Governor Control
240	298090S		FILTER, Fuel
265	691024		CLAMP, Casing
267	699492		SCREW -(Casing Clamp)
268	691025		CASING, Control Wire -(Cut To Required Length)
269	691026		WIRE, Control -(Cut To Required Length)
270	691027		NUT -(Control Wire Casing)
271	691028		LEVER, Control
271A	695381		LEVER, Control
278	792008		WASHER -(Governor Lever) -Used Before Code Date 09101900
278	798196		WASHER -(Governor Control Lever) -Used After Code Date 09101800
281	697268		PANEL, Control
404	795759		WASHER -(Governor Crank)
410	695382		LINK, Control
504	695383		SET, Friction Washer
505	793515		NUT -(Governor Control Lever) -Used After Code Date 09101800
505	691251		NUT -(Governor Control Lever) -Used Before Code Date 09101900
562	798197		BOLT -(Governor Control Lever) -Used After Code Date 09101800
562	793216		BOLT -(Governor Lever) -Used Before Code Date 09101900
564	699492		SCREW -(Control Cover)
564A	699491		SCREW -(Control Cover)
601	791850		CLAMP, Hose
604A	791752		COVER, Control
614	691620		PIN, Cotter -(Governor Crank)

Not For Reproduction

Copyright © Briggs & Stratton. All Rights reserved

Controls, Fuel Supply, Governor Spring

Mfg. No: 204312-1162-B9

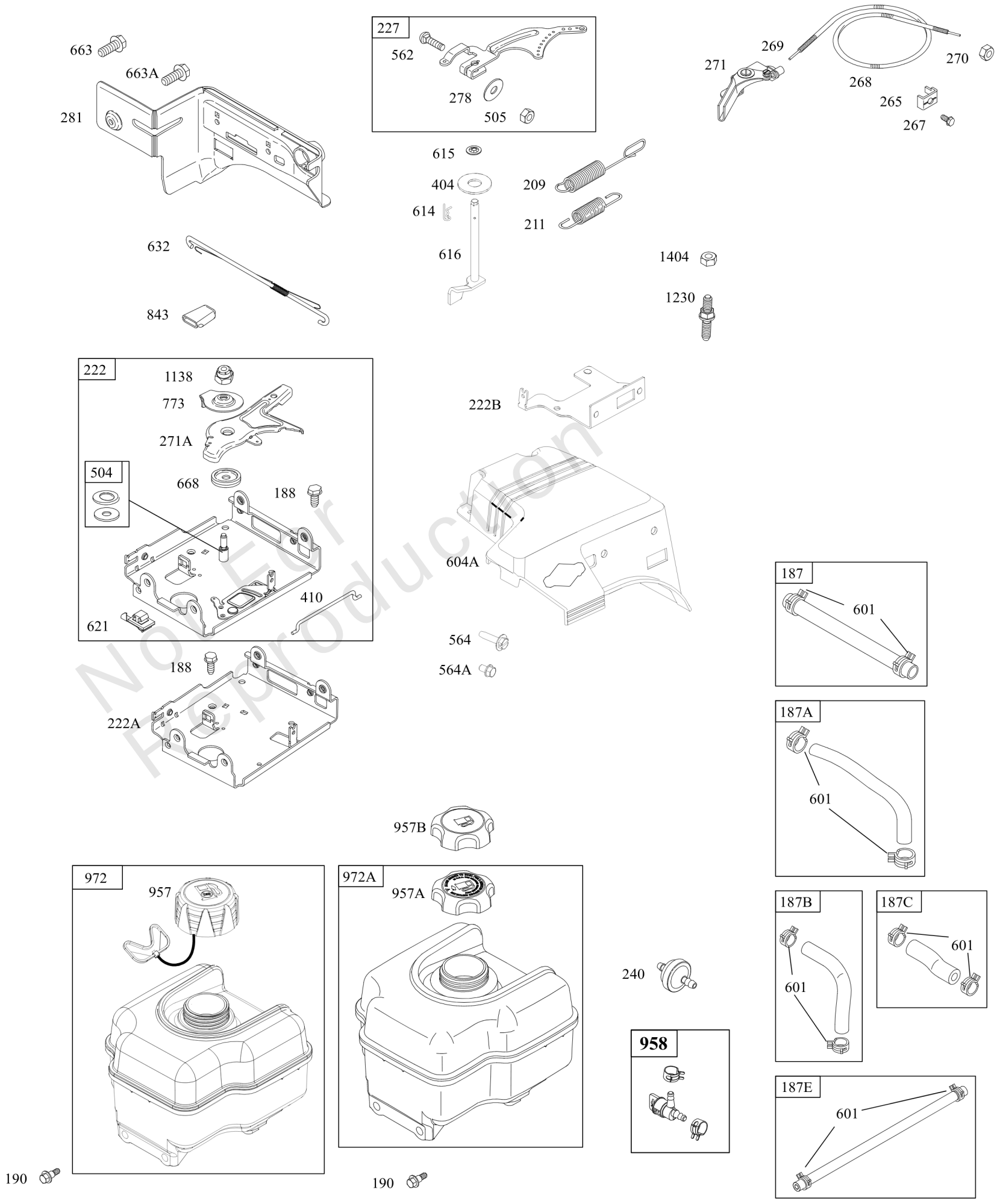

Not For Reproduction

Controls, Fuel Supply, Governor Spring

REF NO	PART NO	QTY	DESCRIPTION
615	694676		RETAINER, Governor Shaft -(Governor Gear) -Used Before Code Date 08021500
616	795758		CRANK, Governor
621	692310		SWITCH, Stop
632	695917		SPRING/LINK, Mechanical Governor -Used Before Code Date 08071800
663	699492		SCREW -(Control Panel)
663A	795026		SCREW -(Control Panel)
668	694257		SPACER -(Control Bracket)
773	694258		RETAINER
843	695588		SLEEVE, Lever
957	799719		CAP, Fuel Tank -(Plastic)
957A	792647		CAP, Fuel Tank -(Plastic) (Fresh Start)
957B	795027		CAP, Fuel Tank -(Plastic)
958	698180		VALVE, Fuel Shutoff -(Plastic)
972	799863		TANK, Fuel -(Plastic)
972A	-----		Tank-Fuel -(Plastic) (No Longer Available)(For Replacement, Order Reference 972)
1138	694255		NUT -(Control Bracket)
1230	794840		STUD -(Control Bracket)
1404	794838		NUT -(Control Cover)

Not For Reproduction

Mfg. No: 204312-1162-B9

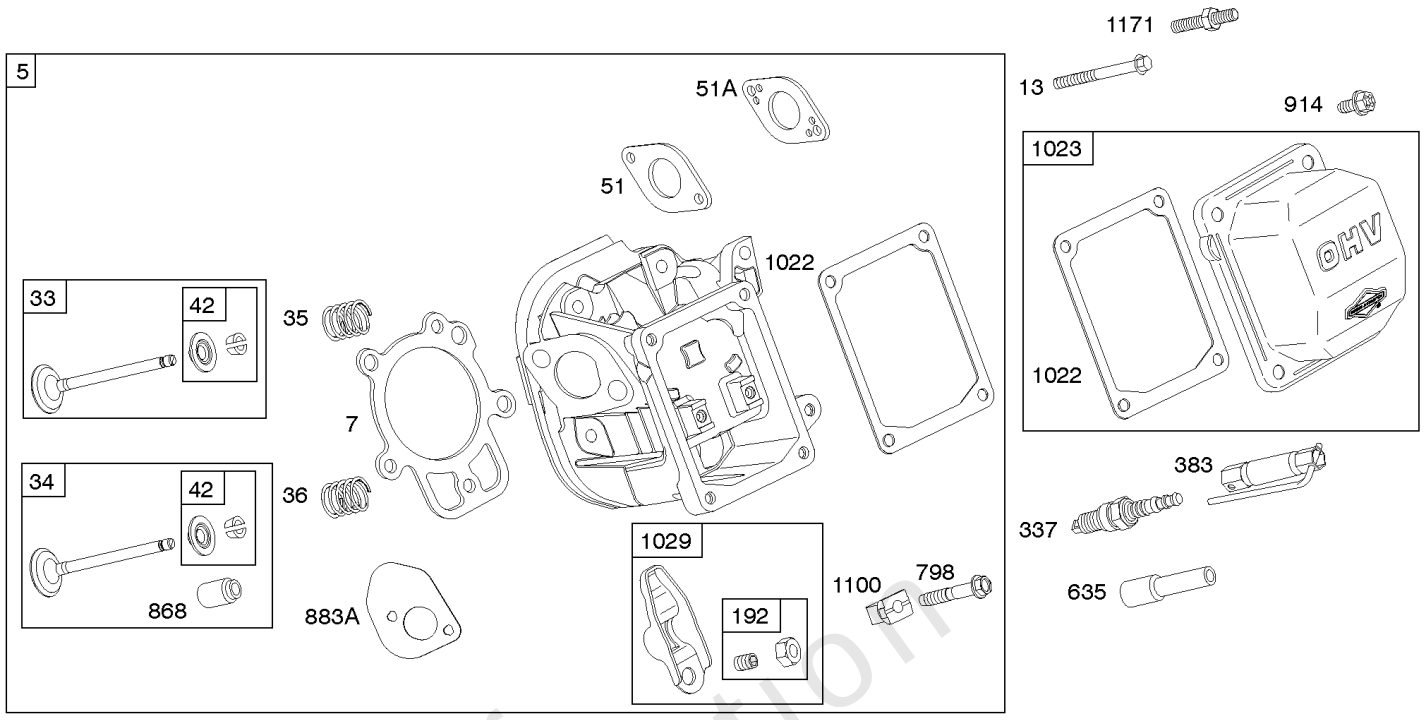

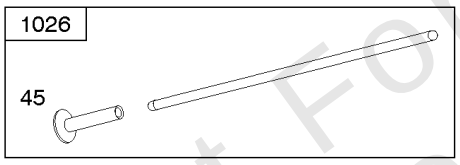

358 ENGINE GASKET SET

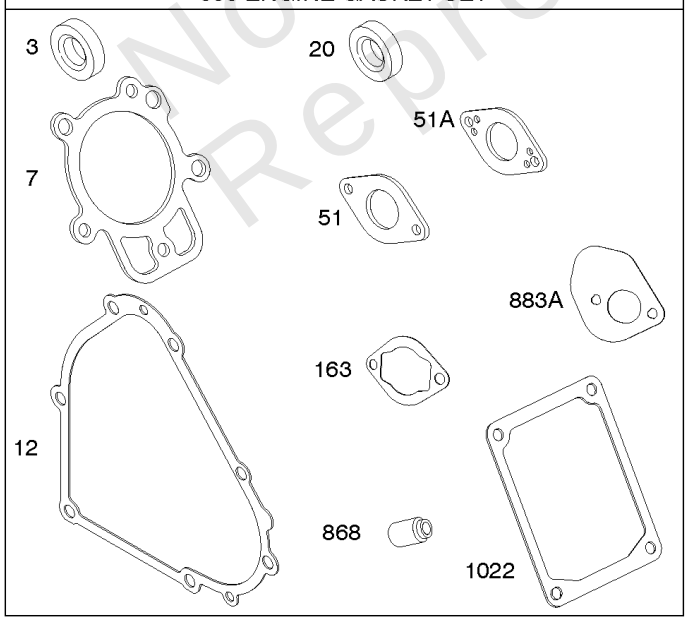

1095 VALVE GASKET SET

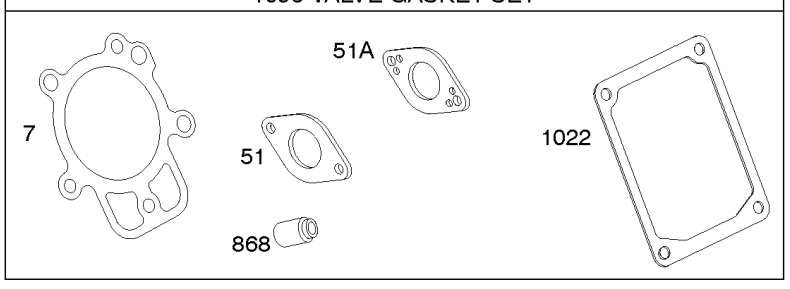

Not For Reproduction

Cylinder Head, Gasket Sets, Valves

REF NO	PART NO	QTY	DESCRIPTION
3	391086S		SEAL, Oil -(Magneto Side)
5	799859		HEAD, Cylinder
7	694872		GASKET, Cylinder Head
12	694953		GASKET, Crankcase
13	794829		SCREW -(Cylinder Head)
20	391086S		SEAL, Oil -(PTO Side)
33	697576		VALVE, Exhaust
34	792200		VALVE, Intake
35	694865		SPRING, Valve -(Intake)
36	694865		SPRING, Valve -(Exhaust)
42	499586		KEEPER, Valve
45	690977		TAPPET, Valve
51	694874		GASKET, Intake
51A	694875		GASKET, Intake
163	692277		GASKET, Air Cleaner -(Air Cleaner)
192	690083		ADJUSTER. Rocker Arm
337	491055S		PLUG, Spark
337	84007216	1	PLUG, SPARK -(China Only)
358	695438		GASKET SET, Engine
383	19576S		WRENCH, Spark Plug
635	691909		BOOT, Spark Plug
798	697890		SCREW -(Rocker Arm)
868	690968		SEAL, Valve
883A	794818		GASKET, Exhaust
914	794827		SCREW -(Rocker Cover)
1022	690971		GASKET, Rocker Cover
1023	697691		COVER, Rocker
1026	592673		ROD, Push
1029	690972		ARM, Rocker
1095	695440		GASKET SET, Valve
1100	791959		PIVOT, Rocker Arm
1171	794828		STUD -(Rocker Cover)

Not For Reproduction

Electric Starter, Gear Reduction

Mfg. No: 204312-1162-B9

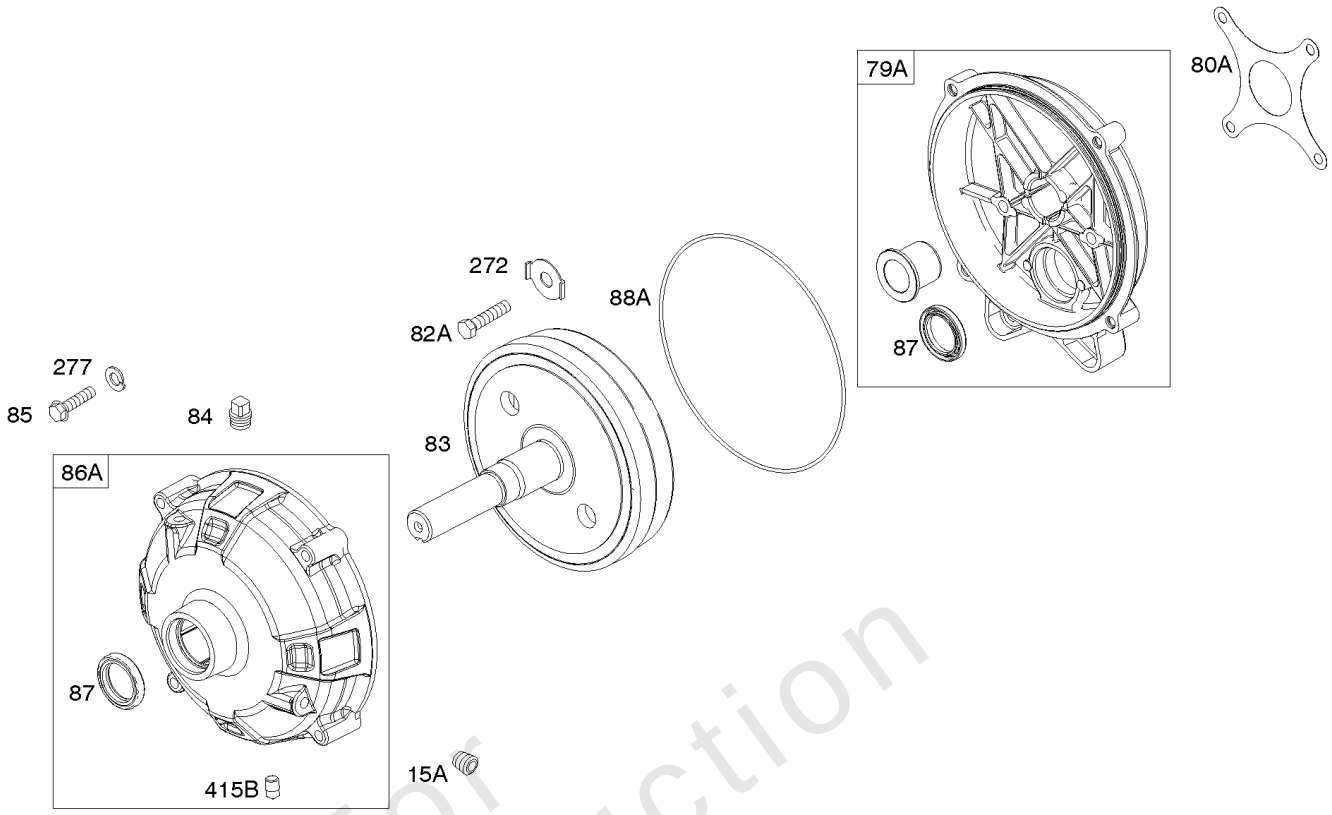

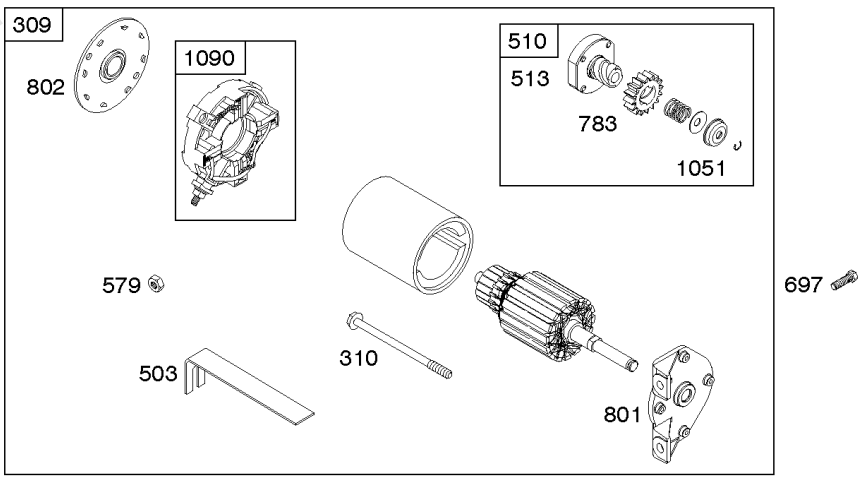

Not For Reproduction

Electric Starter, Gear Reduction

REF NO	PART NO	QTY	DESCRIPTION
15A	691682		PLUG-OIL DRAIN
83	690387		SHAFT, Auxiliary Drive
84	691121		PLUG-BREATHER
85	794820		SCREW -(Gear Cover)
87	391086S		SEAL, Oil
272	691168		LOCK, Screw Head
277	794842		WASHER -(Gear Case To Gear Reduction)
309	695479		MOTOR, Starter
310	690323		SCREW -(Starter Motor)
415B	794903		PLUG
503	691532		STRAP, Starter
510	693699		DRIVE, Starter
513	692024		CLUTCH, Drive
579	691029		NUT -(Starter Cable)
697	795026		SCREW -(Drive Cap)
783	693713		GEAR, Pinion
801	694482		CAP-DRIVE
802	691286		CAP, End
1051	691265		RING, Retaining
1090	691293		RETAINER, Brush

Not For Reproduction

Copyright © Briggs & Stratton. All Rights reserved

Mfg. No: 204312-1162-B9

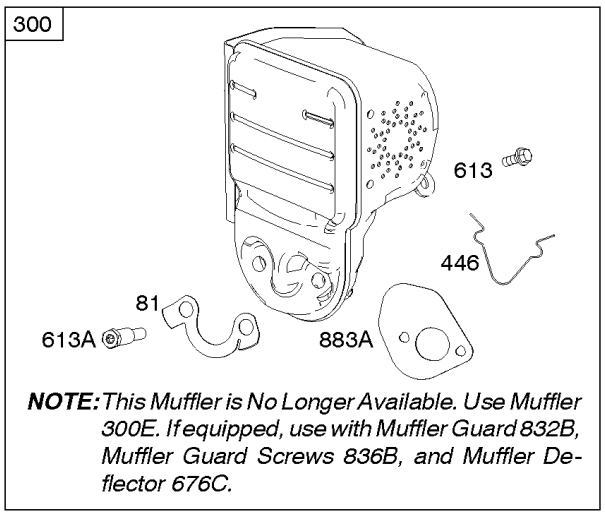

NOTE: *This Muffler is No Longer Available. Use Muffler 300E. If equipped, use with Muffler Guard 832B, Muffler Guard Screws 836B, and Muffler Deflector 676C.*

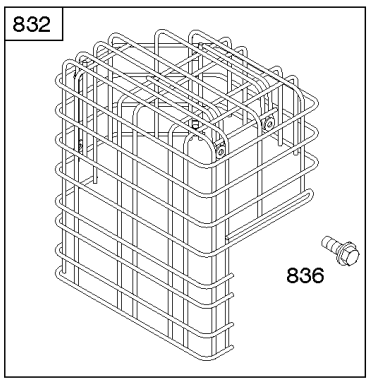

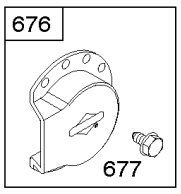

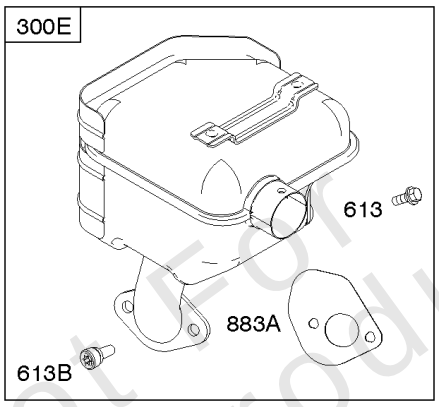

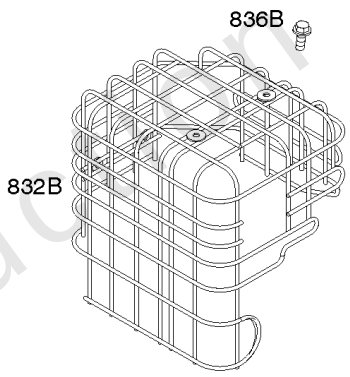

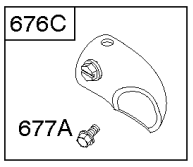

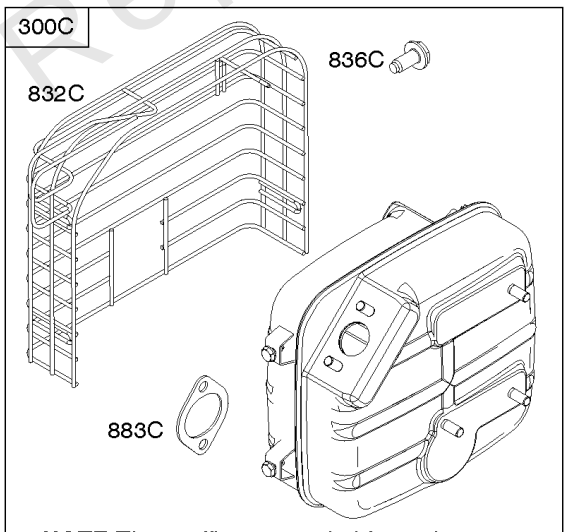

NOTE: *This muffler is intended for replacement purposes only and is not to be used for retrofitting to engines with different exhaust systems.*

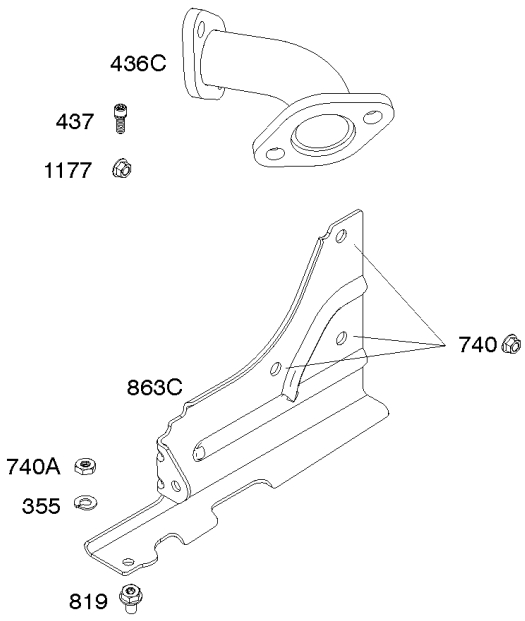

Not For Reproduction

Copyright © Briggs & Stratton. All Rights reserved

Exhaust System

REF NO	PART NO	QTY	DESCRIPTION
81	794817		LOCK, Muffler Screw
300	-----		Muffler -(No Longer Available)(Use Muffler Reference 300E. If equipped, use withMuffler Guard 832B, Muffler Guard Screws 836B, and Muffler Deflector676C)
300C	793701		MUFFLER
300E	794949		MUFFLER -(With Guard Mounting Bracket)
355	794842		WASHER -(Muffler Bracket)
436C	792374		MANIFOLD, Exhaust
437	794844		SCREW -(Exhaust Manifold)
446	794941		SPRING, Retainer
613	794846		SCREW -(Muffler)
613A	794848		SCREW -(Muffler)
613B	794844		SCREW -(Muffler)
676	795036		DEFLECTOR, Muffler
676C	697816		DEFLECTOR, Muffler
677	794845		SCREW -(Muffler Deflector)
677A	699776		SCREW -(Muffler Deflector)
740	710090		LOCKNUT -(Muffler Bracket)
740A	794843		NUT -(Muffler Bracket)
819	794832		SCREW -(Muffler Bracket)
832	795035		GUARD, Muffler
832B	590767		MUFFLER
832C	792380		MUFFLER
836	794845		SCREW -(Muffler Guard)
836B	699234		SCREW -(Muffler Guard)
836C	710023		SCREW -(Muffler Guard)
863C	793700		BRACKET, Muffler
883A	794818		GASKET, Exhaust
883C	710250		GASKET, Exhaust
1177	710090		LOCKNUT -(Muffler)

Not For Reproduction

Replacement Engine - US & Canada

REF NO	PART NO	QTY	DESCRIPTION
	20S2320038	1	Replacement Engine
	794907	1	Replacement Short Block
	-----		Top No-Load Speed: 3750 -Trim: ALL
	-----		Service Note: For all Go-Karts use only a Model 136200 series engine as a replacement, regardless of the original Model.
	-----		Service Note: Transfer Oil Sensor to the replacement engine.
	-----		Service Note: Transfer Muffler and/or Spark Arrester Assembly from the original engine if suitable for additional service or add new parts as required

Not For Reproduction

Copyright © Briggs & Stratton. All Rights reserved

Copyright © Briggs & Stratton. All Rights reserved