Parts Manual

Mfg. No: 195432-0177-01

Copyright © Briggs & Stratton. All Rights reserved

22-Jun-2026

Model Components

Page

Blower Hsg,Flywheels,Screens. 4
Carburetor Assemblies,A/C. 8
Cylinder,Crankcase,Controls. 14
Electric Starter, Chart. 22
Electric Starter,Alternator. 24
Fuel Tank Assembly, Primer. 28
Gear Case Assembly,Mufflers. 30
Replacement Engine - US & Canada. 32

Not For Reproduction

Copyright © Briggs & Stratton. All Rights reserved

Blower Hsg,Flywheels,Screens

Mfg. No: 195432-0177-01

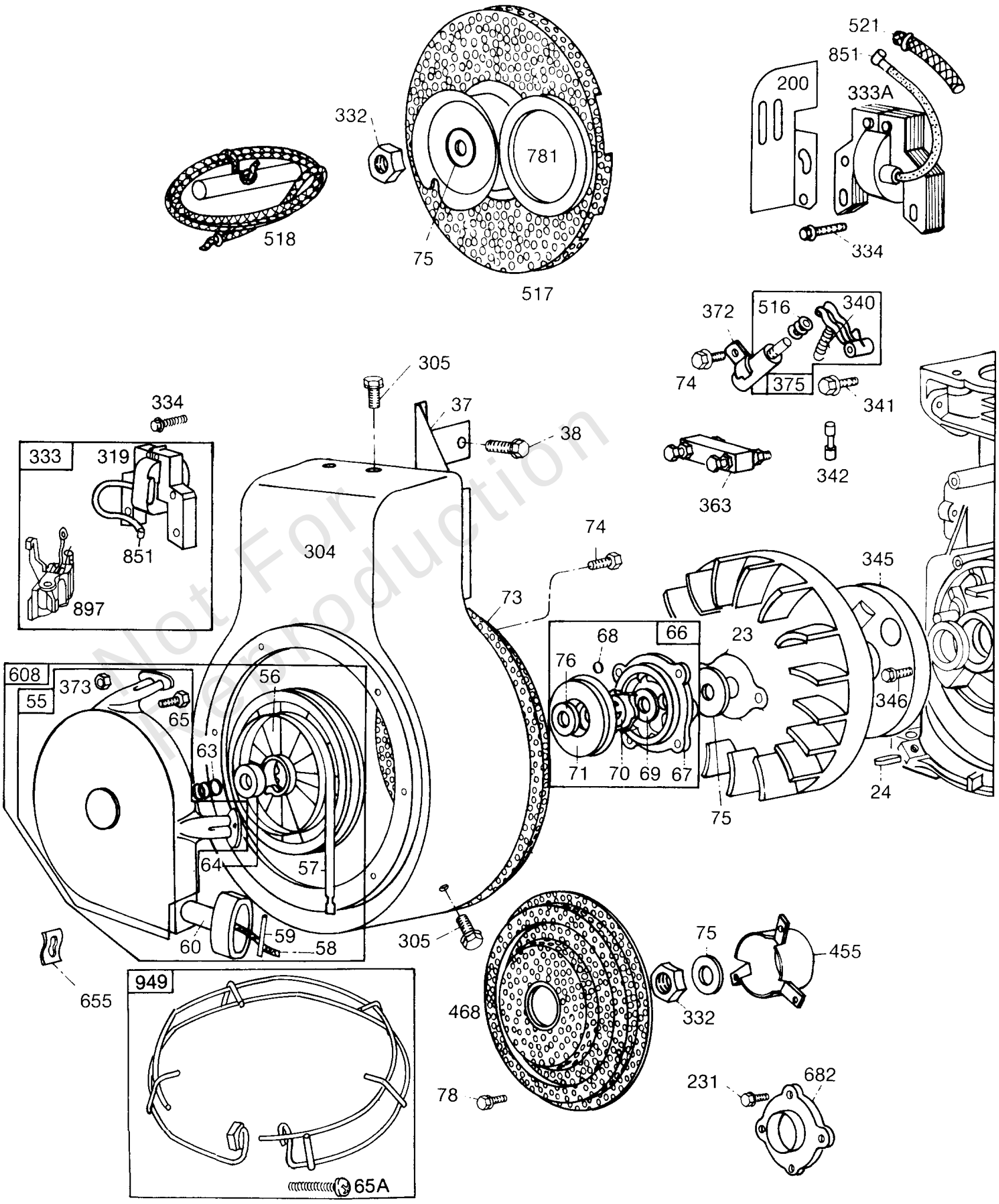

Not For Reproduction

Blower Hsg,Flywheels,Screens

REF NO	PART NO	QTY	DESCRIPTION
23	298260		FLYWHEEL
24	222698		KEY, Flywheel
24	61760		KEY, Flywheel -(Breaker Ignition)
37	222475		GUARD, Flywheel
38	93535		SCREW -(5/16-18 X 3/4)
38	93777		SCREW
55	393576		HOUSING, Rewind Starter
56	295871		PULLEY, Starter -(63 Rope) Includes 63 rope; if longer rope is required, order rope No. 66894 and cut to required length.
57	294303		SPRING, Rewind Starter
58	66884		ROPE, Starter -(Cut To Required Length) For use with Plastic Pulley; if longer rope is needed, order No. 66894 and cut to required length.
59	230228		PIN, Starter Grip
60	66728		GRIP, Starter Rope
63	260414		SPRING, Ratchet
64	230543		ADAPTER, Ratchet Spring
65A	94057		SCREW -(Guard Retaining)
65	93067		SCREW -(3/8)
66	298798		CLUTCH, Starter -(Rewind Starter)
67	212132		HOUSING, Clutch
68	63770		BALL, Clutch
69	66718		WASHER -(1-1/16 O.D. X 17/32 I.D.) (1 1/16 O.D. X 17/32 I.D.)
70	298799		RATCHET, Clutch -(engine W/Ring Gear on FW equipped for Elec Start)
71	221653		WASHER
73	221796		SCREEN, Rotating
74	93042		SCREW
75	220865		WASHER -(Heavy Flywheel)
76	68238		SEAL, Ratchet
78	93805		SCREW
200	221760		GUIDE, Air
231	93064		SCREW
304	299853		HOUSING, Blower
305	93158		SCREW -(1/4-20 X 5/8)
319	395326		ARMATURE, Magneto -(Electronic Ignition-Without Module)
332	92284		NUT -(Flywheel)
333A	298968		ARMATURE, Magneto -(Breaker Ignition)
333	395492		ARMATURE, Magneto -(Magnetron Ignition)
334	93381		SCREW

Not For Reproduction

Footnotes:

Use 392918 Starter Panel Kit on Engines

Use 222751 Starter Panel on Engines

Copyright © Briggs & Stratton. All Rights reserved

Blower Hsg,Flywheels,Screens

Mfg. No: 195432-0177-01

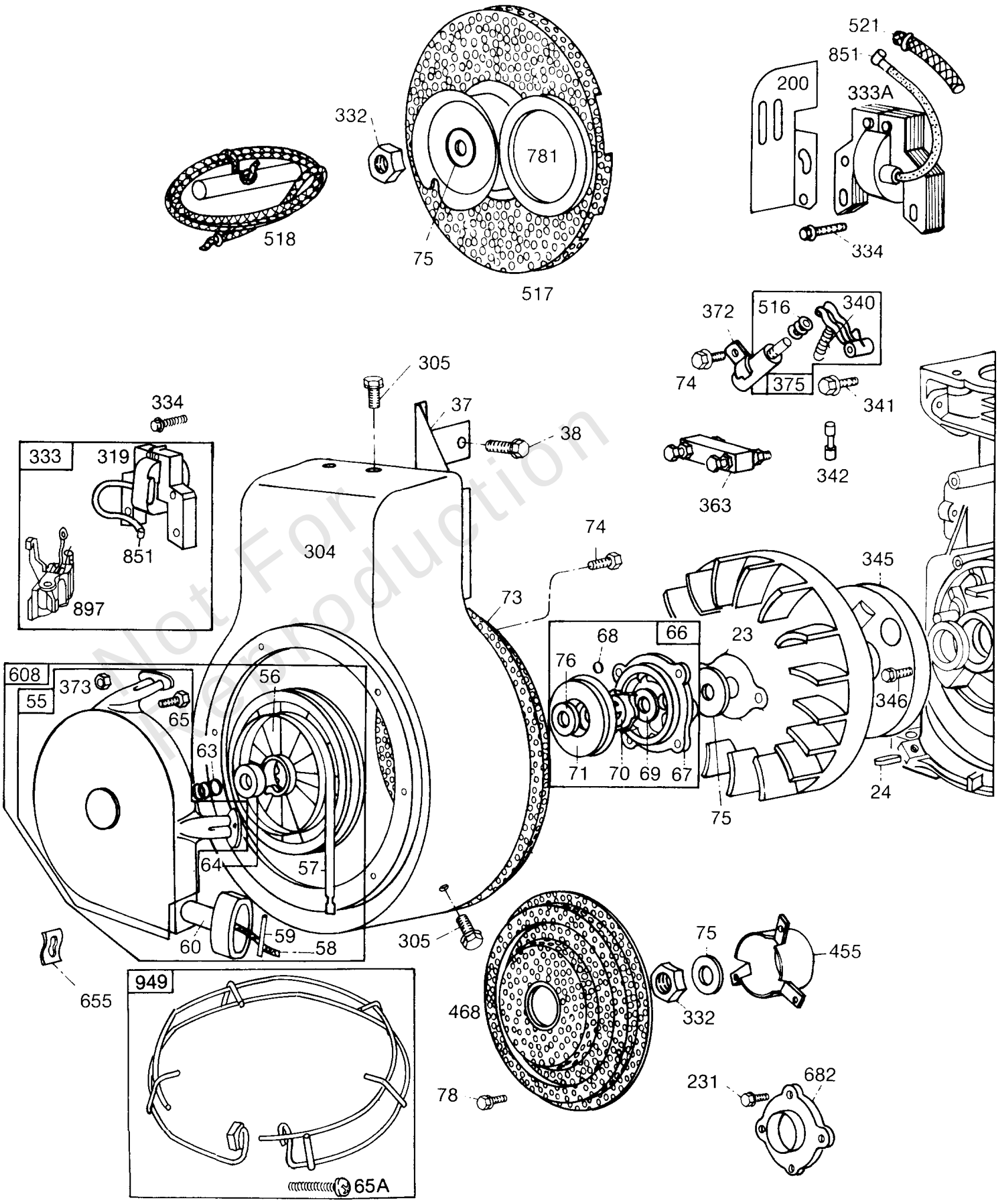

Not For Reproduction

Blower Hsg,Flywheels,Screens

REF NO	PART NO	QTY	DESCRIPTION
340	26018		SPRING, Breaker Arm
341	93381		SCREW
342	65704		PLUNGER, Breaker
345	222117		COVER, Breaker
346	93705		SCREW -(8-32 X 3/8)
363	19165		PULLER, Flywheel
372	220477		CLAMP
373	92987		STARTER, Rewind
375	294628		BREAKER, Ignition
375	299061		BREAKER, Ignition -Includes: 294628 Point Set 65704 Plunger 61760 Key-Flywheel (Conversion to MAGNETRON Ignition Order Part No. 394970)
455	222561		CUP, Flywheel
468	222562		SCREEN, Rotating
516	260374		SPRING, Condensor
517	295423		PULLEY, Rope Starter
518	69932		GRIP, Starter Rope
521	298529		SHIELD, Protective
608	390391		STARTER, Rewind -For Starter Assy. With Longer Than Standard Rope-Order No. 299640
655	222598		ANCHOR, Rewind Spring -(Stamped Rewind Housing)
682	211516		SHIELD, Starter
781	280068		CAP, Starter Pulley
851	221798		TERMINAL, Spark Plug
897	394970		KIT, Magnetron Ignition
949	396581		GUARD, Rewind

Not For Reproduction

Footnotes:

Use 392918 Starter Panel Kit on Engines
Use 222751 Starter Panel on Engines

Copyright © Briggs & Stratton. All Rights reserved

Mfg. No: 195432-0177-01

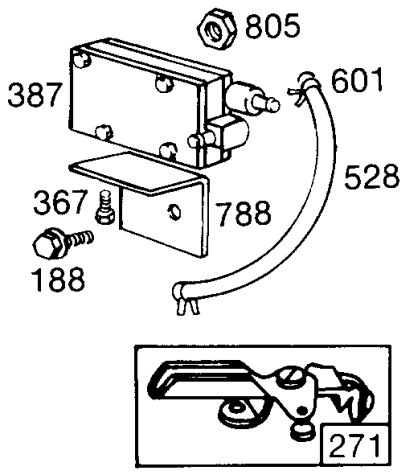

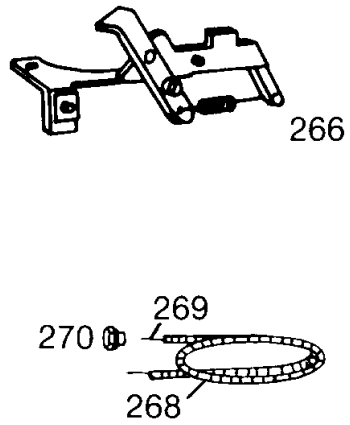

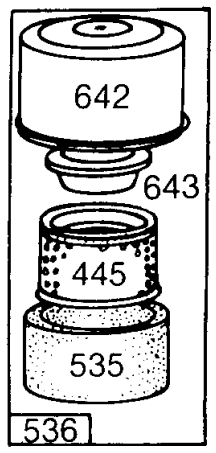

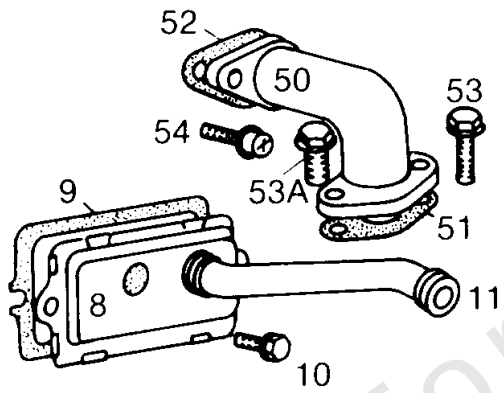

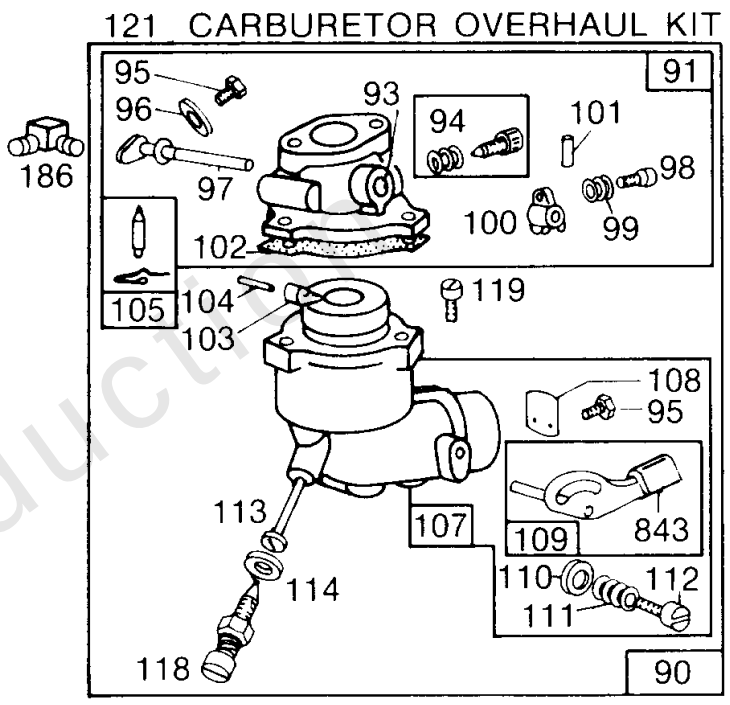

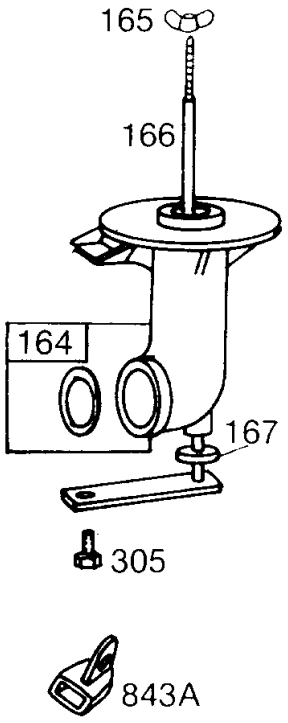

NON-METAL AIR CLEANER PIPE GROUP

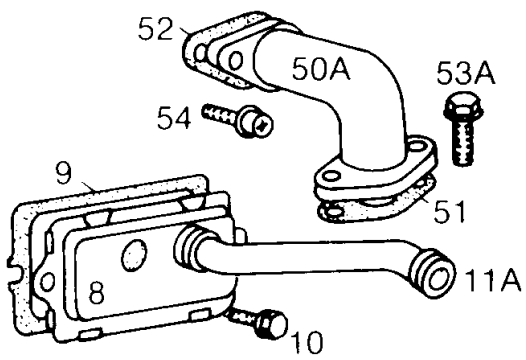

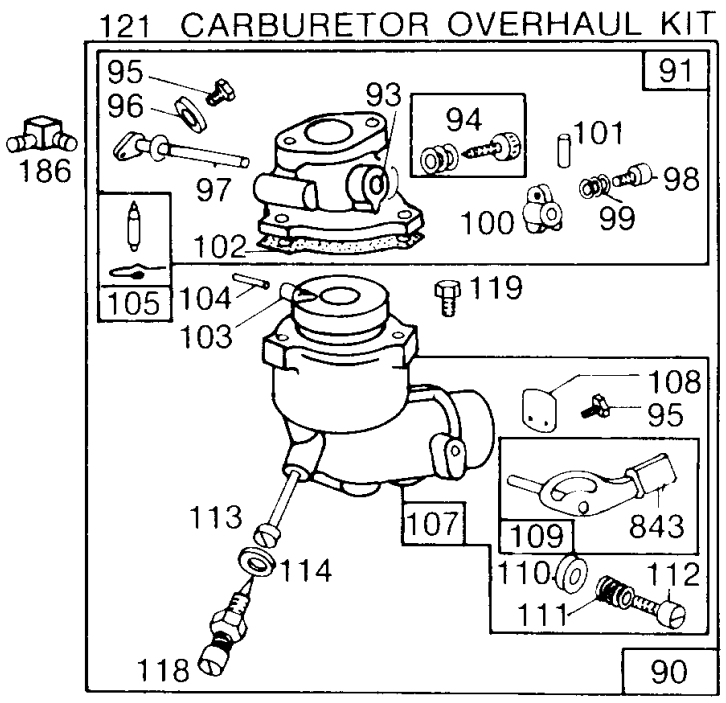

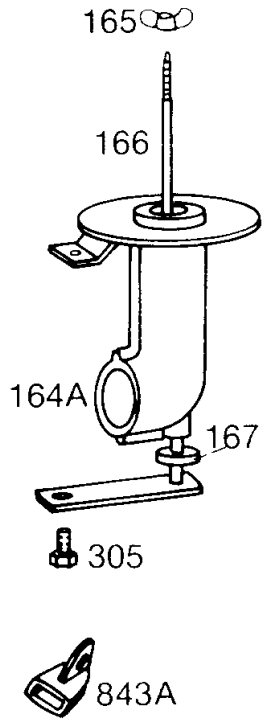

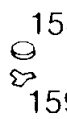

METAL AIR CLEANER PIPE GROUP

Not For Reproduction

Copyright © Briggs & Stratton. All Rights reserved

Carburetor Assemblies,A/C

REF NO	PART NO	QTY	DESCRIPTION
8	390321		BREATHER ASSEMBLY
9	27803		GASKET, Rocker Cover -Included in Gasket Set-Part No. 299577
10	93394		SCREW
11A	67068		TUBE, Breather -(Used with Metal Air Cleaner Pipe)
11	280267		TUBE, Breather -(Used with Nylon Air Cleaner Pipe)
50A	211812		MANIFOLD, Intake
50	212488		MANIFOLD, Intake
51	270684		GASKET, Intake -Included in Gasket Set-Part No. 299577
52	27828		GASKET, Intake -Included in Gasket Set-Part No. 299577
53A	93357		SCREW
53	93956		SCREW
54	93208		SCREW -(Intake Manifold)
90	390323		CARBURETOR -(Manual Choke)
91	390404		BODY, Upper Carburetor
93	23108		BUSHING, Throttle Shaft
94	292681		VALVE, Idle Mixture -Included in Carburetor Overhaul Kit-Part No. 394693
95	93499		SCREW -(Throttle Valve)
96	62940		VALVE, Throttle
97	298826		SHAFT, Throttle
98	91920		SCREW -(8-32 X 5/8)
99	26157		SPRING, Compression
100	61967		STOP, Throttle
101	93043		PIN, Shaft
102	27918		GASKET, Carburetor Body -Included in Carburetor Overhaul Kit-Part No. 394693
103	99333		FLOAT, Carburetor
104	230896		PIN, Float Hinge -Included in Carburetor Overhaul Kit-Part No. 394693
105	394681		KIT, Needle/Seat -(Gravity Feed) Order No. 394683 for Fuel Pump Application.
107	299170		BODY, Lower Carburetor -Used Before Code Date 82030500
108	221835		VALVE, Choke -Used After Code Date 82030600
108	62872		VALVE, Choke -Used Before Code Date 82030500
109	391987		SHAFT, Choke -(Manual)
109	396700		SHAFT, Choke -(Choke-A-Matic) -Used After Code Date 83121500
110	62899		WASHER -(Thermostat)

Not For Reproduction

Footnotes:

Use 392918 Starter Panel Kit on Engines
Use 222751 Starter Panel on Engines
(Use 390403 Lower Carburetor Body Assembly on Engines)

Copyright © Briggs & Stratton. All Rights reserved

Mfg. No: 195432-0177-01

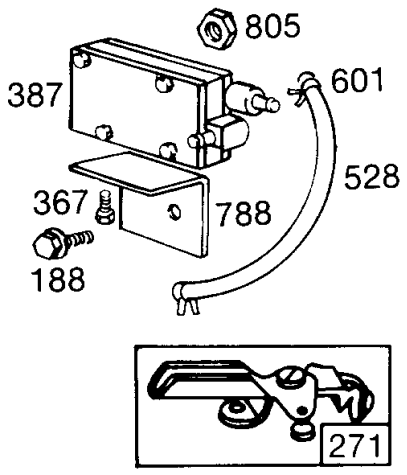

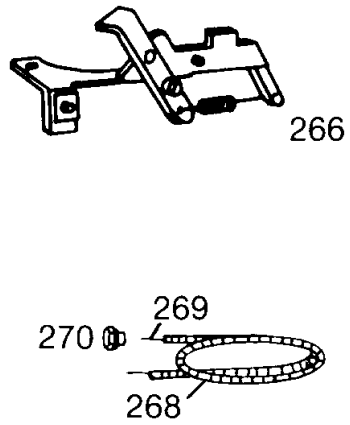

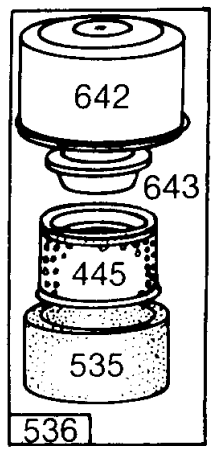

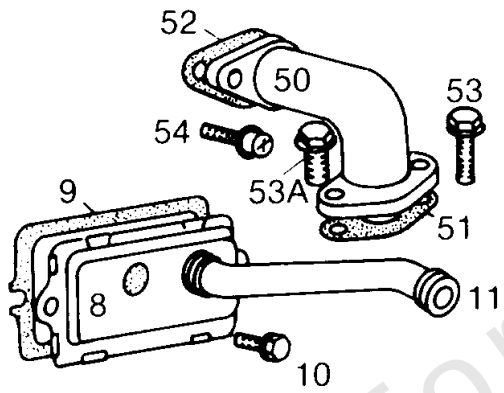

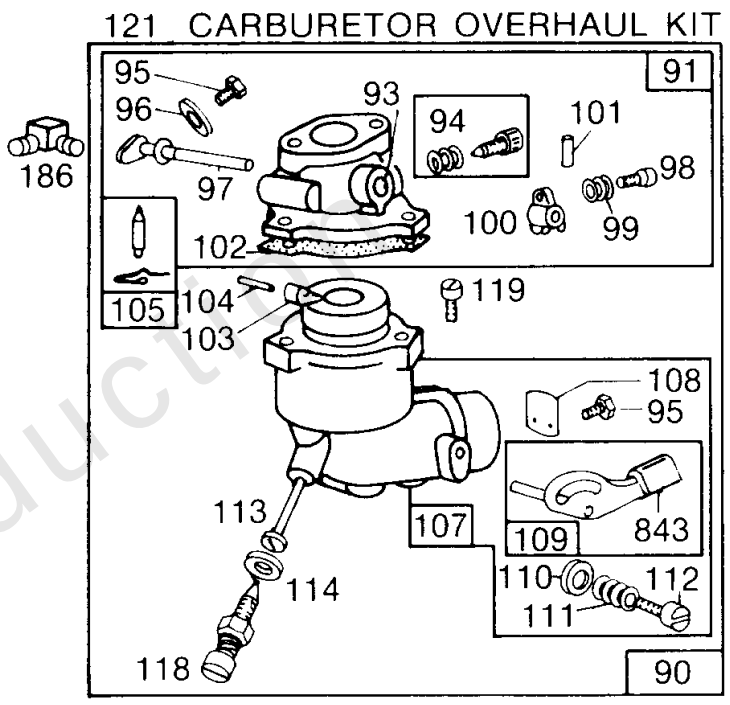

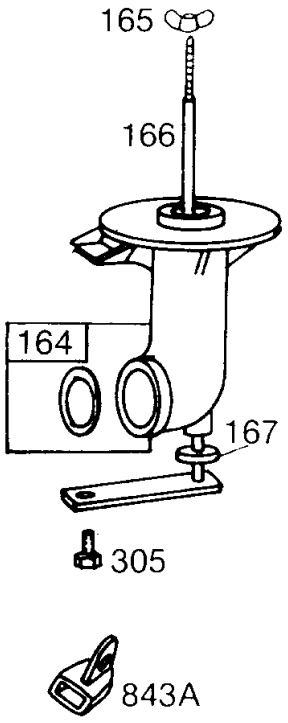

NON-METAL AIR CLEANER PIPE GROUP

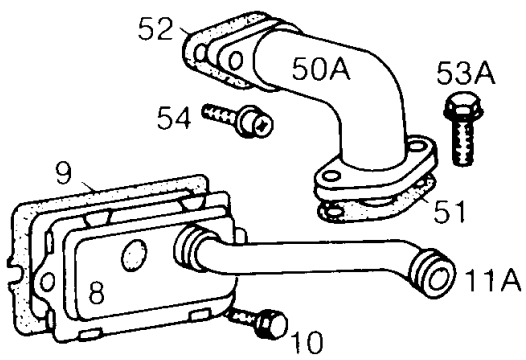

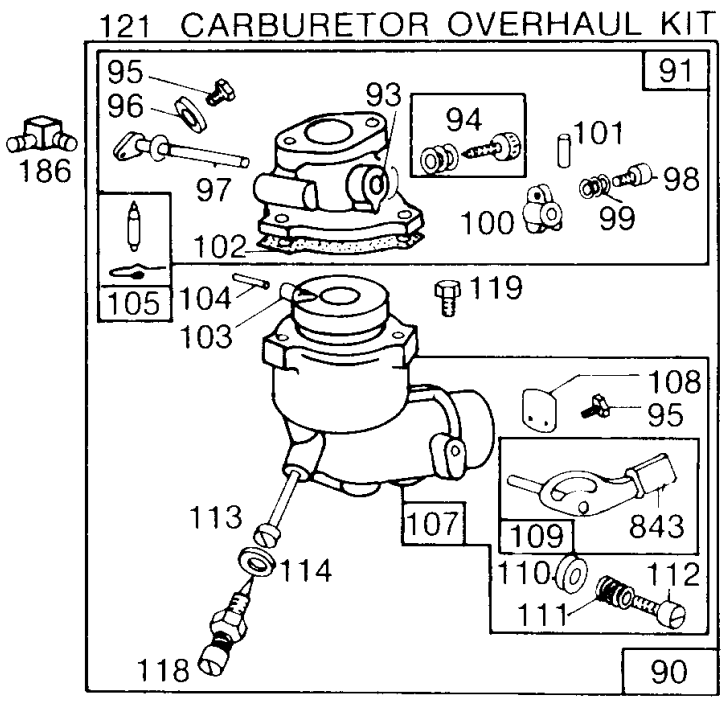

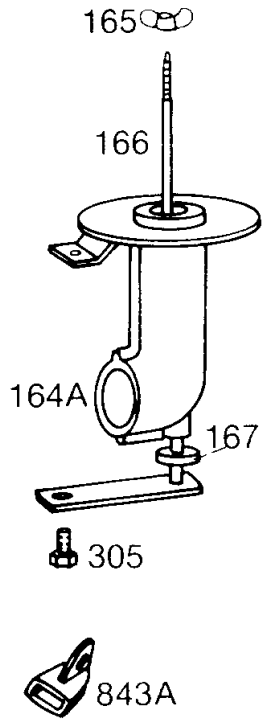

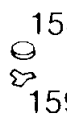

METAL AIR CLEANER PIPE GROUP

Not For Reproduction

Copyright © Briggs & Stratton. All Rights reserved

Carburetor Assemblies,A/C

REF NO	PART NO	QTY	DESCRIPTION
111	26155		SPRING, Friction
112	23123		SCREW
113	395207		NOZZLE, Carburetor -Included in Carburetor Overhaul Kit-Part No. 394693
114	68667		WASHER -(Viton Seat) Included in Carburetor Overhaul Kit-Part No. 394693
118	99525		VALVE, High Speed -Included in Carburetor Overhaul Kit-Part No. 394693
119	93496		SCREW -(10-32 X 5/8)
121	295938		KIT, Carburetor Overhaul -Used Before Code Date 81033000
121	394693		KIT, Carburetor Overhaul -Used After Code Date 81032700
164A	391628		BASE, Air Cleaner
164	394520		BASE, Air Cleaner -Uses: 271265 O-Ring Seal
165	93453		NUT
166	392105		STRAP/STUD, Air Cleaner Mounting -(9 9/16)
167	65978		SEAL, O-Ring -(Needle Valve)
186	67218		CONNECTOR, Hose
188	93535		SCREW -(5/16-18 X 3/4)
266	291460		CONTROL, Throttle -(Disc Type)
268	65616		CASING, Control Wire -(Cut To Required Length)
269	26633		WIRE, Control -(Cut To Required Length) if longer wire is required, specify length in inches; if shorter wire is needed, Order No. 26633 and cut to required length.
270	63426		NUT -(Control Wire Casing)
271	290568		LEVER, Control
305	93158		SCREW -(1/4-20 X 5/8)
367	93380		SCREW
387	390765		PUMP, Fuel -Order No. 394462 for Pump Repair Kit
445	390930		FILTER, A/C Cartridge
528	390674		LINE, Fuel
535	270782		FILTER, Air Cleaner Foam
536	391063		CLEANER, Air
601	93053		CLAMP, Hose -(Green)
642	222271		COVER, Air Cleaner
643	222272		RETAINER, Air Filter
788	222221		BRACKET, Fuel Pump
805	231001		NUT
843A	280147		KNOB, Control -(Sno gard)

Not For Reproduction

Footnotes:

Use 392918 Starter Panel Kit on Engines
Use 222751 Starter Panel on Engines
(Use 390403 Lower Carburetor Body Assembly on Engines)

Copyright © Briggs & Stratton. All Rights reserved

Mfg. No: 195432-0177-01

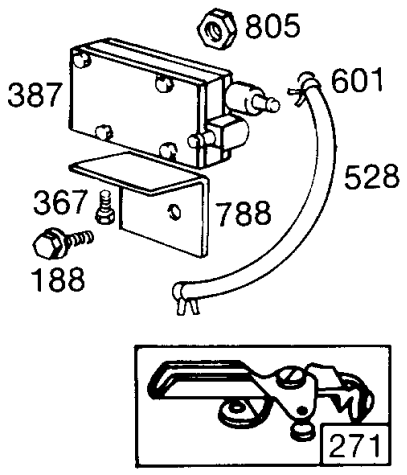

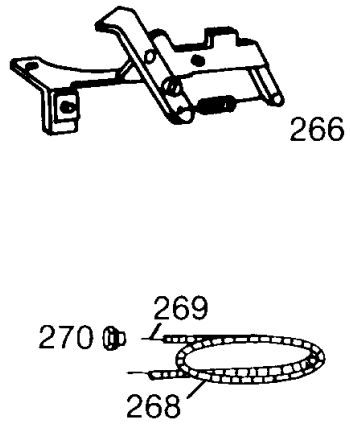

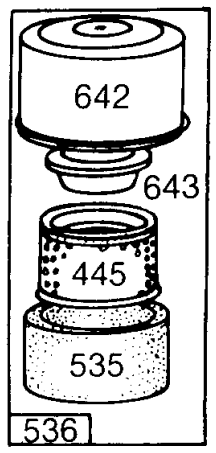

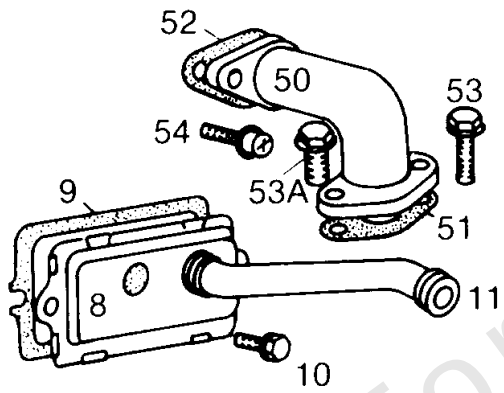

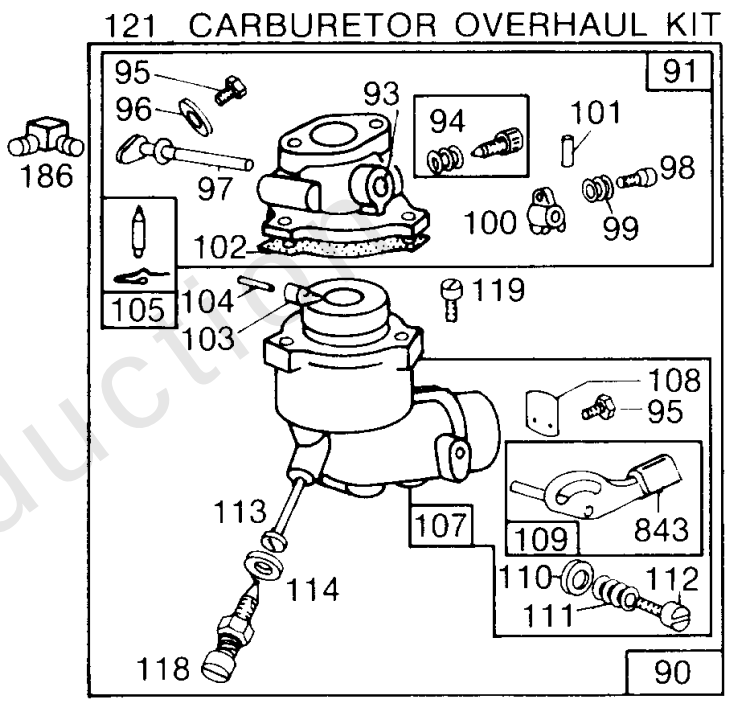

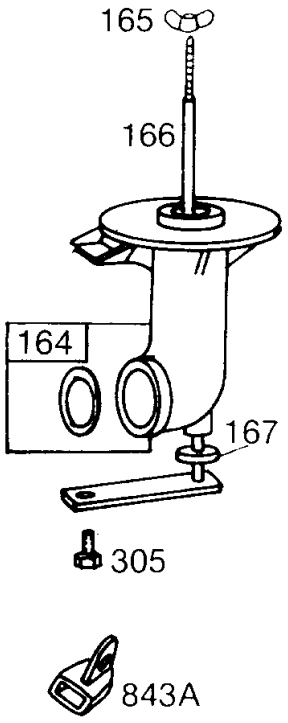

NON-METAL AIR CLEANER PIPE GROUP

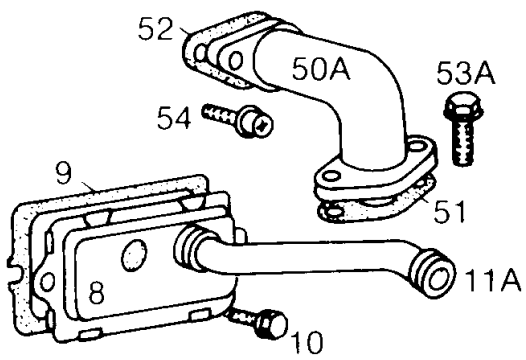

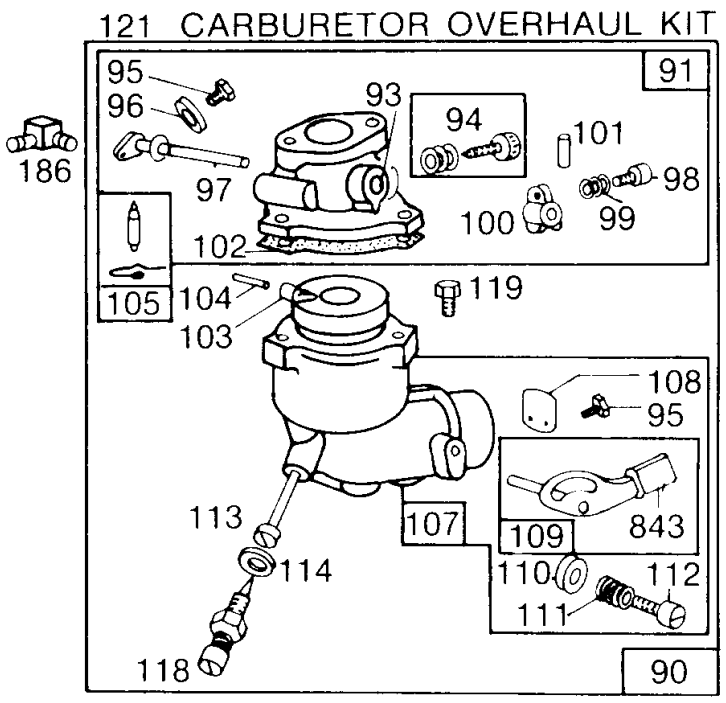

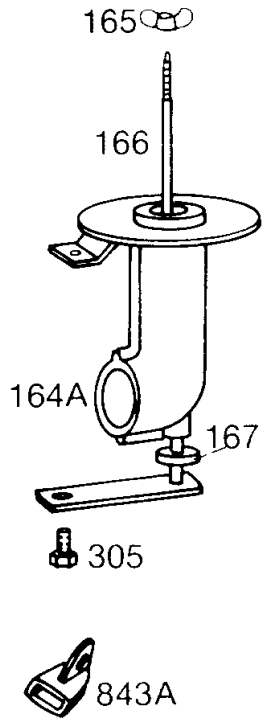

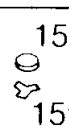

METAL AIR CLEANER PIPE GROUP

Not For Reproduction

Copyright © Briggs & Stratton. All Rights reserved

REF NO	PART NO	QTY	DESCRIPTION
843	280149		SLEEVE, Lever

Not For Reproduction

Footnotes:

Use 392918 Starter Panel Kit on Engines
Use 222751 Starter Panel on Engines
(Use 390403 Lower Carburetor Body Assembly on Engines)

Copyright © Briggs & Stratton. All Rights reserved

Mfg. No: 195432-0177-01

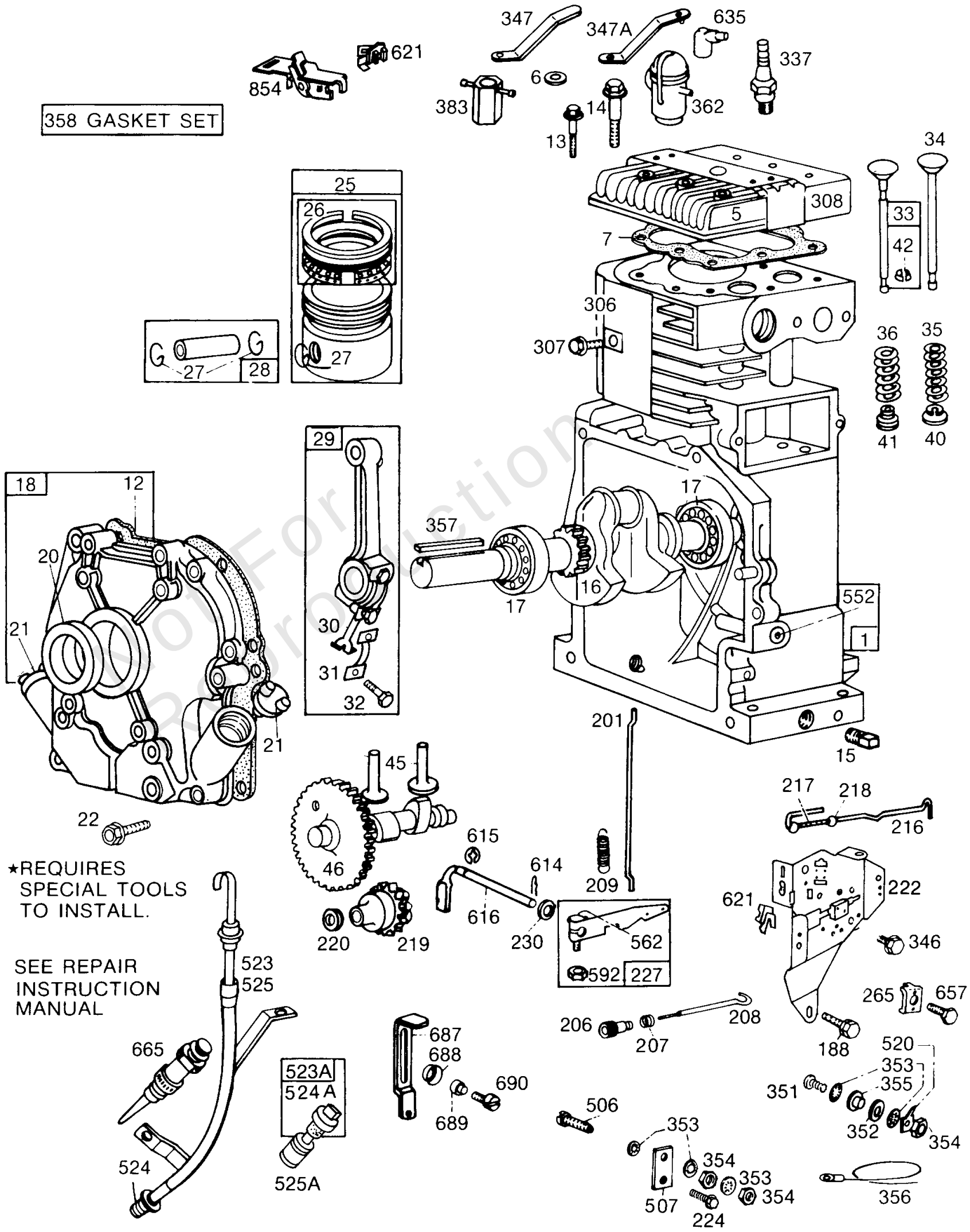

Not For Production

REF NO	PART NO	QTY	DESCRIPTION
1	393886		CYLINDER ASSEMBLY
5	212286		HEAD, Cylinder
6	22963		WASHER
7	270430		GASKET, Cylinder Head -Included in Gasket Set-Part No. 299577
12	27750		GASKET, Crankcase -(1/64) Included in Gasket Set-Part No. 299577
12	27876		GASKET, Crankcase -(.005) Included in Gasket Set-Part No. 299577
12	27877		GASKET, Crankcase -(.009) Included in Gasket Set-Part No. 299577
13	93211		SCREW -(5/16-18 X 2-21/32)
13	93776		STUD -(Cylinder Head)
14	93723		SCREW -(3)
15	91084		PLUG, Oil Drain -(3/8)
16	393743		CRANKSHAFT
17	29530		BEARING, Ball
18	299178		COVER, Crankcase
20	391086		SEAL, Oil -(Magneto Side)
21	66768		PLUG, Oil
22	93585		SCREW -(Crankcase Cover)
22	93685		SCREW
25	393868		PISTON ASSEMBLY -(Standard)
25	393869		PISTON ASSEMBLY -(.010 Oversize)
25	393879		PISTON ASSEMBLY -(.020 Oversize)
25	393880		PISTON ASSEMBLY -(.030 Oversize)
26	299743		SET, Ring -(.030 Oversize Chrome)
26	393881		SET, Ring -(Standard)
26	393882		SET, Ring -(.010 Oversize)
26	393883		SET, Ring -(.020 Oversize)
26	393884		SET, Ring -(.030 Oversize)
27	68546		LOCK, Piston Pin
28	295840		PIN, Piston -(Standard)
28	295841		PIN, Piston -(.005 Oversize)
29	390401		ROD, Connecting -For Connecting Rod with .020 Undersize Crankpin Bore-Order No. 390773
30	222113		DIPPER, Connecting Rod

Not For Reproduction

Footnotes:

Use 392918 Starter Panel Kit on Engines

Use 222751 Starter Panel on Engines

Copyright © Briggs & Stratton. All Rights reserved

Mfg. No: 195432-0177-01

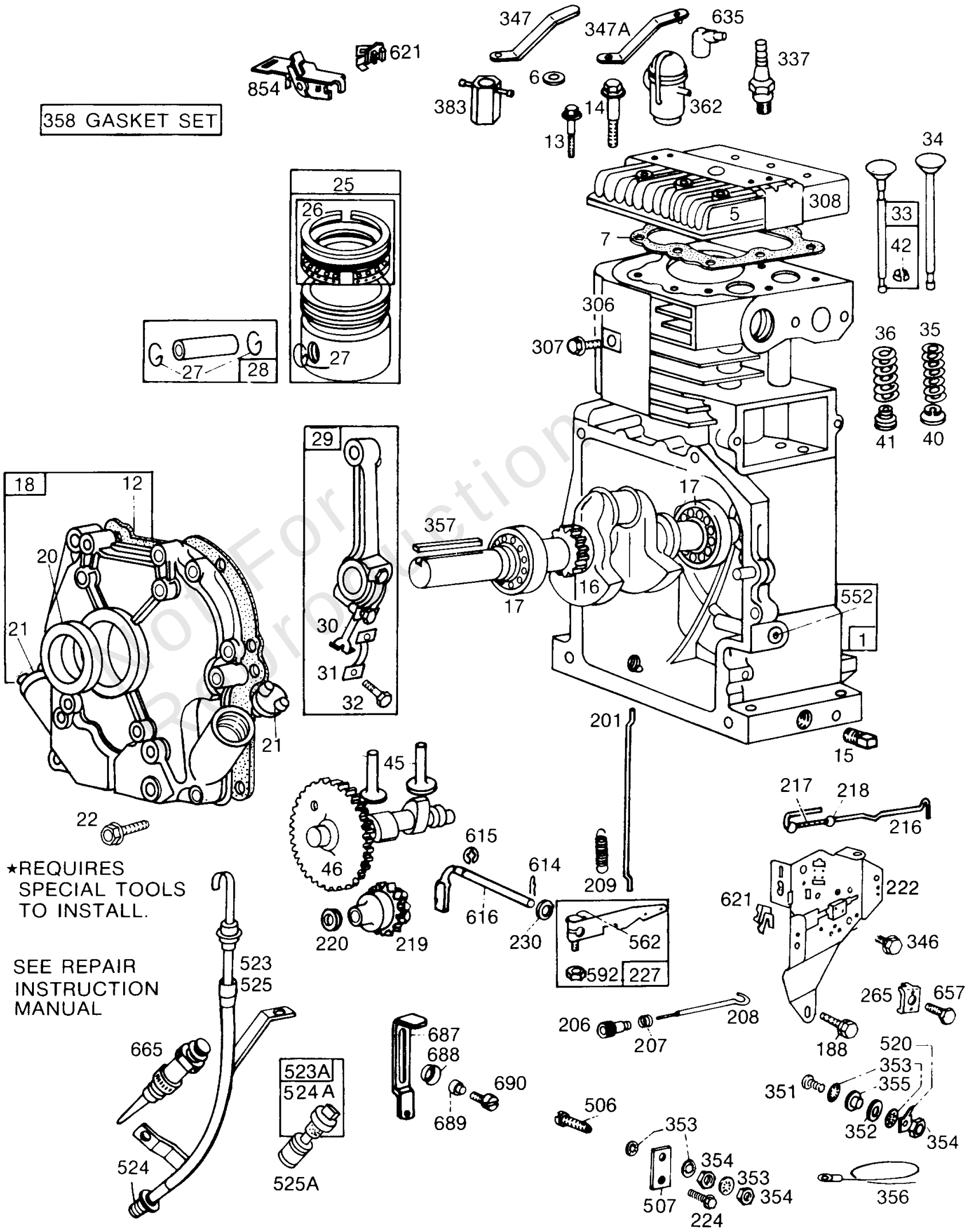

Not For Production

REF NO	PART NO	QTY	DESCRIPTION
31	222114		LOCK, Rod Screw
32	92659		SCREW -(Connecting Rod)
33	390420		VALVE, Exhaust -(Includes Retainer(s))
34	261055		VALVE, Intake
35	65906		SPRING, Valve -(Intake)
36	26828		SPRING, Valve -(Exhaust)
40	221596		RETAINER, Valve -(Valves With Groove In Stem)
41	292260		RETAINER, Valve -(Exhaust Valve) (Exhaust)
42	93630		KEEPER, Valve -(2)
45	260933		TAPPET, Valve
46	211689		CAMSHAFT
188	93535		SCREW -(5/16-18 X 3/4)
201	260872		LINK, Throttle
206	230149		NUT, Governor Adjusting -(5-44) -Used Before Code Date 83121600
206	231266		NUT, Governor Adjusting -(6-32) -Used After Code Date 83121500
207	26855		SPRING, Governor Link
208	230841		ROD, Governor Control -Used Before Code Date 83121600
208	261959		ROD, Governor Control -Used After Code Date 83121500
209	261126		SPRING, Governor
216	261122		LINK, Choke -Used Before Code Date 83121600
216	262026		LINK, Choke -Used After Code Date 83121500
217	261119		SPRING, Choke Return
218	222352		WASHER
219	391737		GEAR, Governor
220	221551		WASHER -(Governor Lever)
222	390670		BRACKET, Control -Used Before Code Date 83121600
222	396232		BRACKET, Control -Used After Code Date 83121500
222	396233		BRACKET, Control -Used After Code Date 83121500
224	93067		SCREW -(3/8)
227	391965		LEVER, Governor Control -(1/4 Diameter)
230	222450		WASHER
265	221535		CLAMP, Casing -(Stamped Steel)

Not For Reproduction

Footnotes:

Use 392918 Starter Panel Kit on Engines
Use 222751 Starter Panel on Engines

Copyright © Briggs & Stratton. All Rights reserved

Mfg. No: 195432-0177-01

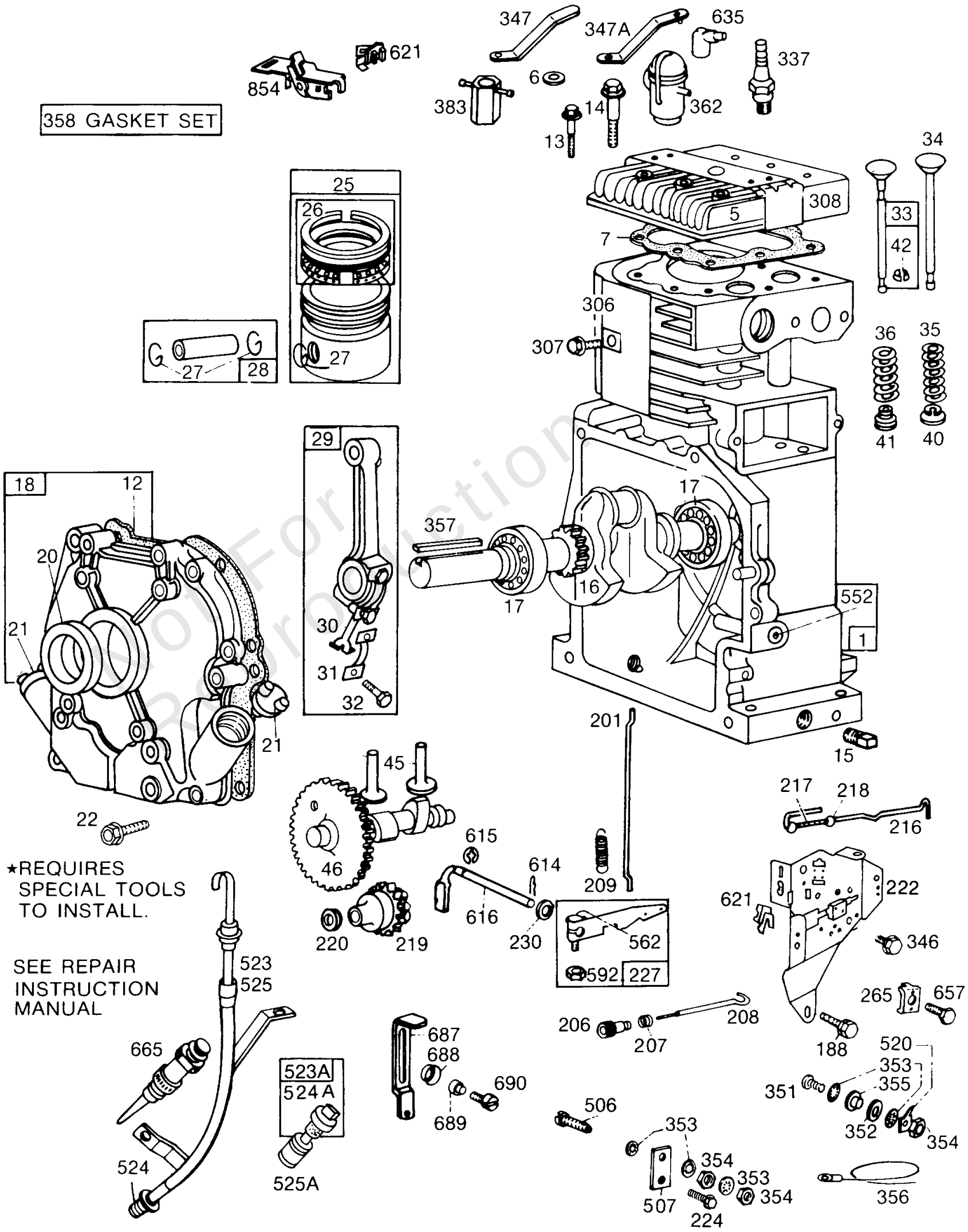

Not For Production

REF NO	PART NO	QTY	DESCRIPTION
306	222830		SHIELD, Cylinder
307	93163		SCREW
308	222636		COVER, Cylinder Head
337	293918		PLUG, Spark
337	29693		PLUG, Spark
337	298809		PLUG, Spark
337	392588		PLUG, Spark
346	93705		SCREW -(8-32 X 3/8)
347A	298926		SWITCH, Spark Plug Stop
347	220197		SWITCH, Stop -(1-1/2 High, 38 Mm. Spark Plugs)
351	91920		SCREW -(8-32 X 5/8)
351	93735		SCREW
352	66068		WASHER -(Fiber)
353	92791		WASHER
354	90576		NUT -(Ground Terminal)
355	66554		WASHER -(Insulating)
356	299500		WIRE, Stop -(Used with Armature Refs. 333A and 333B)
357	91540		KEY, Drive Pulley -(1/4)
358	299577		GASKET SET, Engine
362	291630		SHIELD, Spark Plug -(With Stop Switch)
383	89838		WRENCH, Spark Plug
506	90200		SCREW -(8-32 X 1/2)
507	66895		INSULATOR
520	93722		TERMINAL, Ground
523A	297357		DIPSTICK/CAP ASSEMBLY
523A	295923		CAP, Oil Fill -Uses: 65304 Gasket 230553 Nipple-Oil Filler (5 1/4 Lg.)
523	390848		DIPSTICK
524A	65304		SEAL, O-Ring -(Dipstick Cap)
524	68838		SEAL, O-Ring -(Dipstick Tube)
525A	230553		PIPE, Oil -(5-1/4)
525A	91258		TUBE, Dipstick -(2 1/2) (All Nipples Listed, Use 394884 Oil Filler Pipe Adaptor)
525	299284		TUBE, Dipstick
552	231056		BUSHING, Governor Crank -(1/4 I.D.)
562	92613		BOLT -(Governor Lever)
592	231082		NUT -(Governor Control)

Not For Reproduction

Footnotes:

Use 392918 Starter Panel Kit on Engines
Use 222751 Starter Panel on Engines

Copyright © Briggs & Stratton. All Rights reserved

Mfg. No: 195432-0177-01

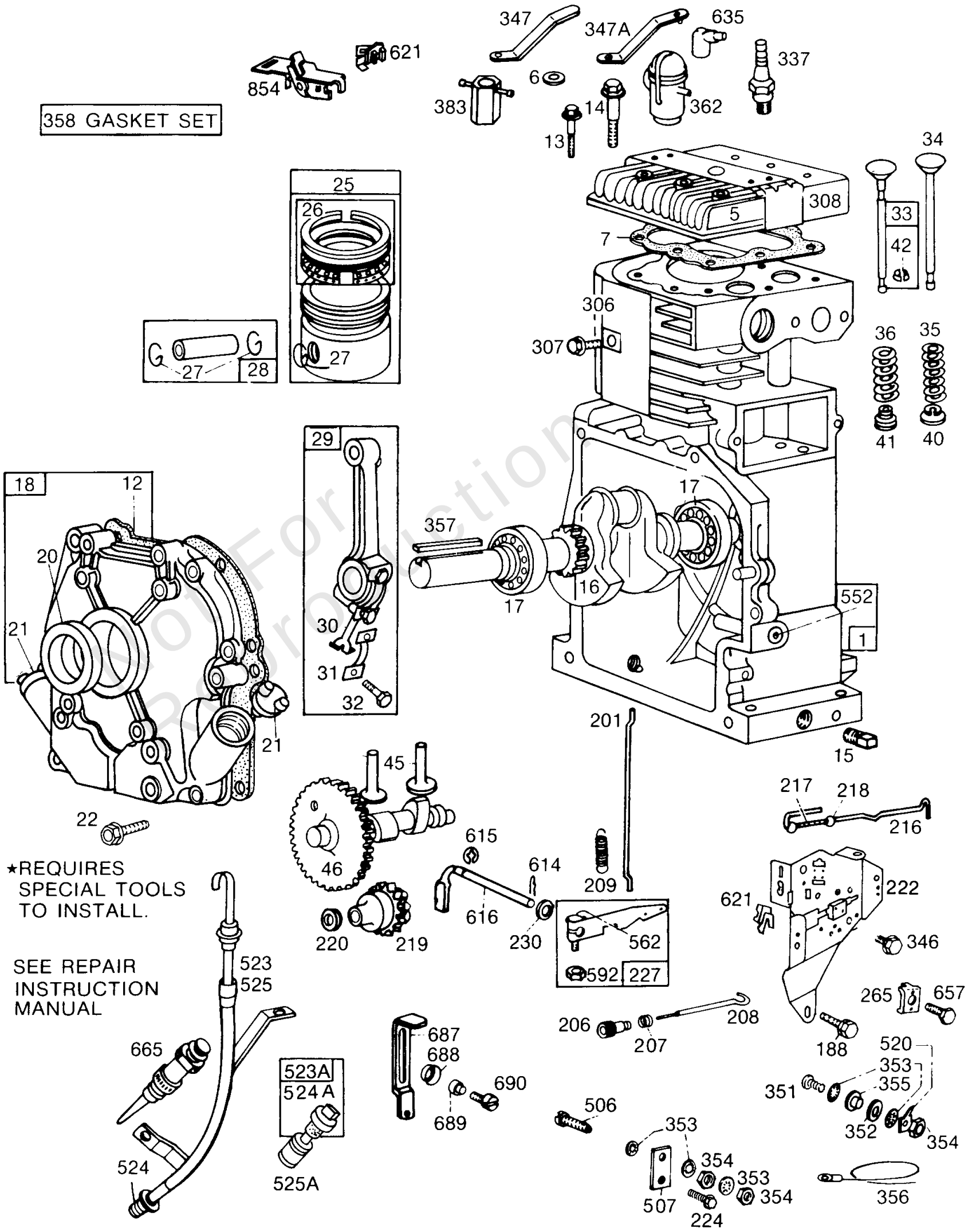

Not For Production

REF NO	PART NO	QTY	DESCRIPTION
614	93306		PIN, Cotter
615	93307		RETAINER, Governor Shaft
616	231057		CRANK, Governor -(1/4 Diameter)
621	297472		SWITCH, Stop
635	66538		BOOT, Spark Plug
657	93496		SCREW -(10-32 X 5/8)
665	298859		MINDER, Oil
687	390690		SLIDE, Control
688	221766		SPRING, Friction
689	260847		SPRING, Friction
690	92484		SCREW
854	392884		BRACKET, Stopswitch

Not For Reproduction

Footnotes:

Use 392918 Starter Panel Kit on Engines
Use 222751 Starter Panel on Engines

Copyright © Briggs & Stratton. All Rights reserved

Mfg. No: 195432-0177-01

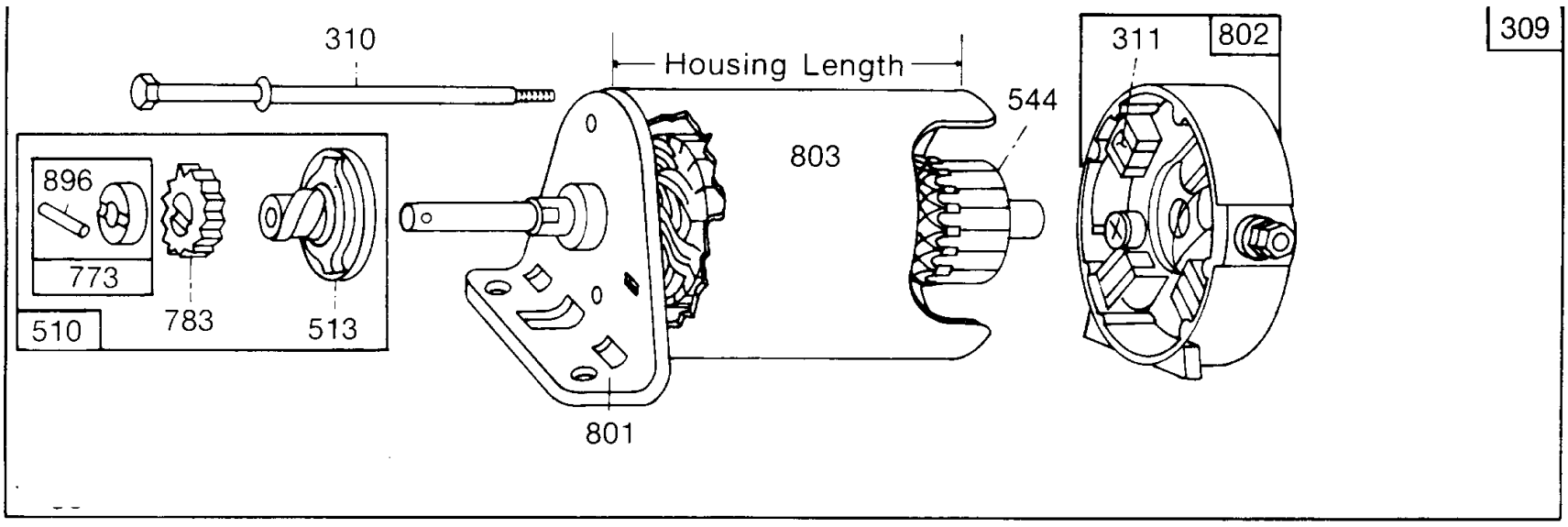

Assemblies include all parts shown in frames.

Subject		Ref. No. 309	Ref. No. 510	Ref. No. 801	Ref. No. 544	Ref. No. 803	Ref. No. 802	Ref. No. 311	Ref. No. 310
Starter Motor Mfr. and Motor Model Number		Motor and Drive Assy.	Drive Assembly	End Cap Assy. Drive	Armature Assembly	Housing Assembly	End Cap Assy. Commutator*	Brush Assembly	Thru Bolt Assembly
Briggs & Stratton	Housing Length								
†12V	3-1/16"	392749	391461**	392061	392747	392744	390846	391705	391706
12V	3-21/32"	394805	391461**	394856	392747	393825	395537	395538	94003

*Includes Brush Set

**Includes #391135 Clutch Assembly (Ref. No. 513)
#280104 Gear (Ref. No. 783)
#391462 Retainer and Pin (Ref. No. 773)
93754 Roll Pin (Ref. No. 896)

NOTE: **Style Identification** of 12 Volt Motors. New Style: Thru Bolt Heads are Located on the Brush End Head Side.
†Old Style: Brush End Head is 13/16" Wide.

Not For Reproduction

Copyright © Briggs & Stratton. All Rights reserved

Electric Starter, Chart

REF NO	PART NO	QTY	DESCRIPTION
309	392749		MOTOR, Starter -(3 1/16 Housing) Old Style: Brush End Head is 13/16 Wide
309	394805		MOTOR, Starter -(3 1/16 Housing)
310	391706		SCREW -(3 1/16 Housing) Old Style: Brush End Head is 13/16 Wide
310	94003		SCREW -(3 5/8 Housing)
311	391705		SET, Brush -(3 1/16 Housing) Old Style: Brush End Head is 13/16 Wide
311	395538		SET, Brush -(3-5/8 or 4 3/8 Housing)
510	391461		DRIVE, Starter -(3 1/2 Housing) Includes #391135 Clutch Assembly (Ref. No. 513) #280104 Gear (Ref. No. 783) #391462 Retainer and Pin (Ref. No. 773) # 93754 Roll Pin (Ref. No. 896). Old Style: Brush End Head is 13/16 Wide
510	391461		DRIVE, Starter -(3 1/2 Housing) Includes #391135 Clutch Assembly (Ref. No. 513) #280104 Gear (Ref. No. 783) #391462 Retainer and Pin (Ref. No. 773) # 93754 Roll Pin (Ref. No. 896)
544	392747		ARMATURE, Starter -(3 21/32 Housing) Old Style: Brush End Head is 13/16 Wide
544	392747		ARMATURE, Starter -(3 21/32 Housing)
801	392061		CAP, Drive -Old Style: Brush End Head is 13/16 Wide (3-1/16 or 3-3/4 Housing)
801	394856		CAP, Drive
802	390846		CAP, End -(3 1/16 Housing) Old Style: Brush End Head is 13/16 Wide. Includes Brush Set
802	395537		CAP, End -(3 5/8 Housing) Includes Brush Set
803	392744		HOUSING, Starter -(3 1/16 Housing) Old Style: Brush End Head is 13/16 Wide
803	393825		HOUSING, Starter -(3 5/8 Housing)

Not For Reproduction

Footnotes:

Use 222751 Starter Panel on Engines

Copyright © Briggs & Stratton. All Rights reserved

Mfg. No: 195432-0177-01

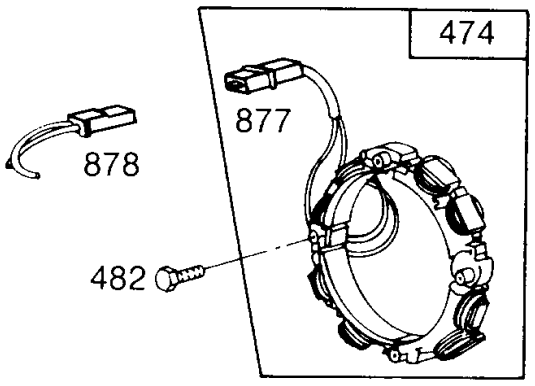

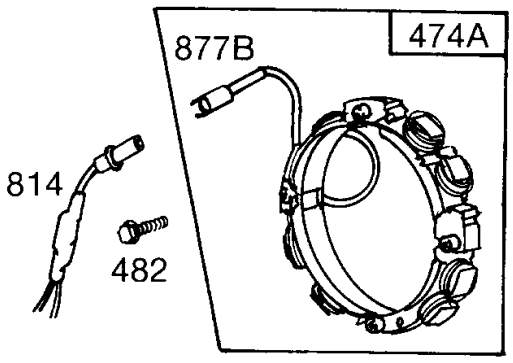

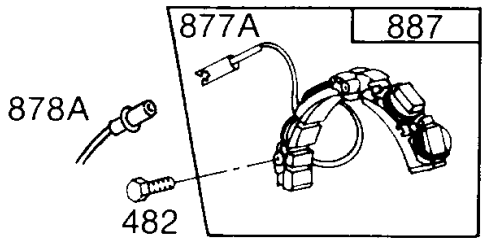

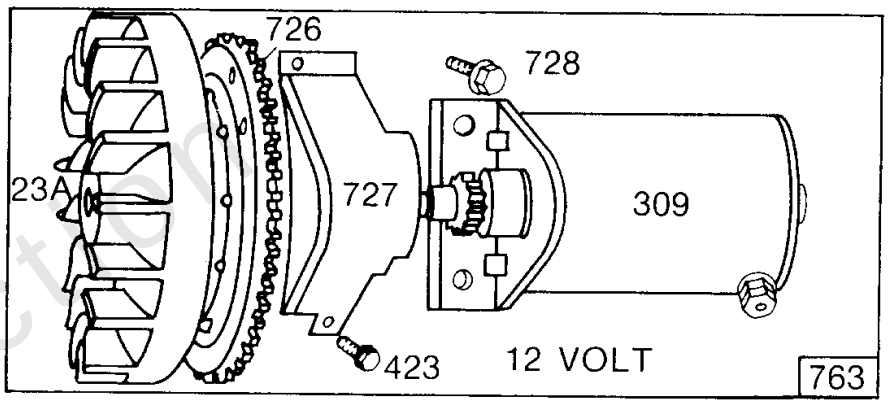

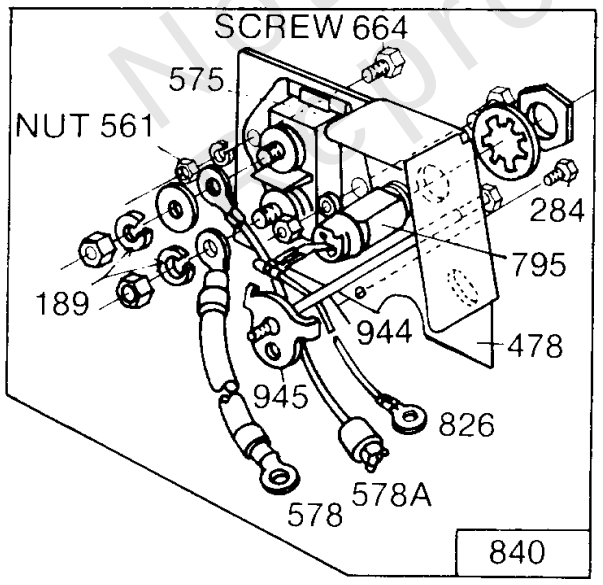

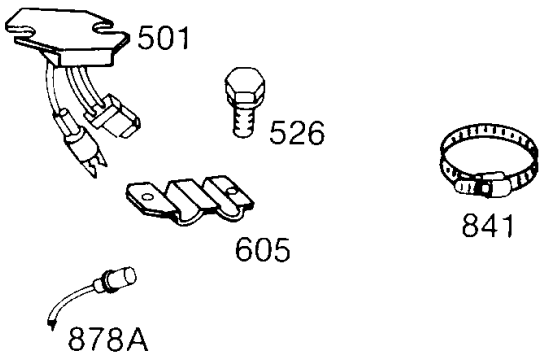

Not For Reproduction

Copyright © Briggs & Stratton. All Rights reserved

Electric Starter,Alternator

REF NO	PART NO	QTY	DESCRIPTION
23A	391983		FLYWHEEL -(Engines With Alternator) For use on engines WITH ALTERNATOR (Includes aluminum ring gear.) for Plastic Drive Gear Starter
23A	392034		FLYWHEEL -(Aluminum Ring Gear) For use only on electric starter engines WITHOUT ALTERNATOR (Aluminum Ring Gear Inc.) For Plastic Drive Gear Starter
189	90366		WASHER
309	392749		MOTOR, Starter -(3 1/16 Housing) Old Style: Brush End Head is 13/16 Wide
309	394805		MOTOR, Starter -(3 1/16 Housing)
423	93410		SCREW -Used with Metal Starter Cover
423	93984		SCREW
474A	392595		ALTERNATOR -(Tri Circuit) (9 Amp Regulated)
474	393295		ALTERNATOR -(10, 13, or 16 Amp-Depending on Size of Flywheel Magnets) (Regulated)
474	393474		ALTERNATOR -(Dual Circuit)
478	395410		KIT, Panel -Used Before Code Date 81102100
482	93621		SCREW -(Tapping)
501	393374		REGULATOR -(10 Amp)
526	93343		SCREW -(Control Panel)
561	92278		NUT -(Starting Switch)
575	299139		SWITCH, Starting
578A	393109		WIRE ASSEMBLY -(Starter Switch To Alternator)
578	392683		CABLE, Starter
605	222934		BRACKET, Mounting
664	93415		SCREW -(1/4-20 X 3/4)
726	392134		GEAR, Ring
727	221940		GUARD, Flywheel
727	221968		GUARD, Flywheel -Each Guard Uses: 93712 Screw
727	395405		COVER, Starter Drive
728	93535		SCREW -(5/16-18 X 3/4)
763	391604		KIT, Electric Starter -(12 Volt Gear Drive)
795	392697		SWITCH, Toggle -(Toggle Switch) Uses: 93888 Nut-Hex.
795	392833		SWITCH, Key
814	392606		HARNESS, Alternator -(Tri Circuit)
826	392684		WIRE, Stop -(Starter Switch to Ground Wire Terminal)
840	395408		KIT, Panel -(Toggle Switch) -Used Before Code Date 81102100

Footnotes:

Use 392725 Starter Panel Kit on Engines
Use 392918 Starter Panel Kit on Engines
Use 222751 Starter Panel on Engines

Not For Reproduction

Copyright © Briggs & Stratton. All Rights reserved

Mfg. No: 195432-0177-01

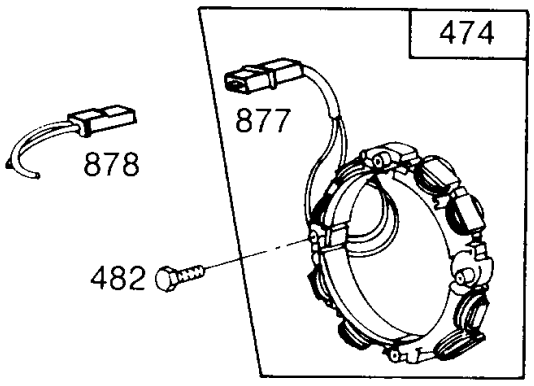

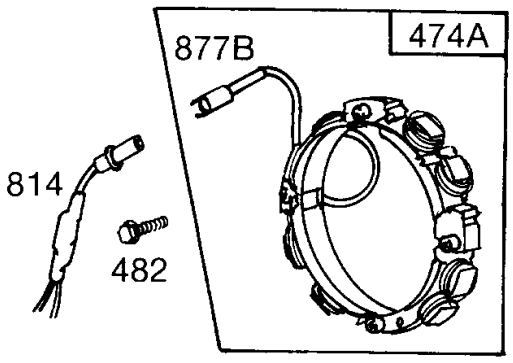

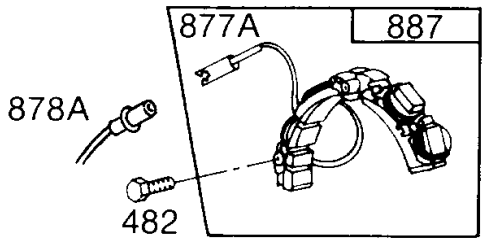

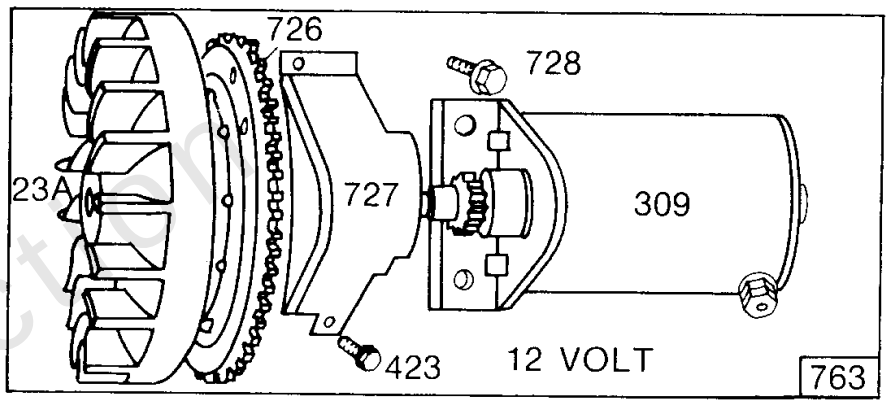

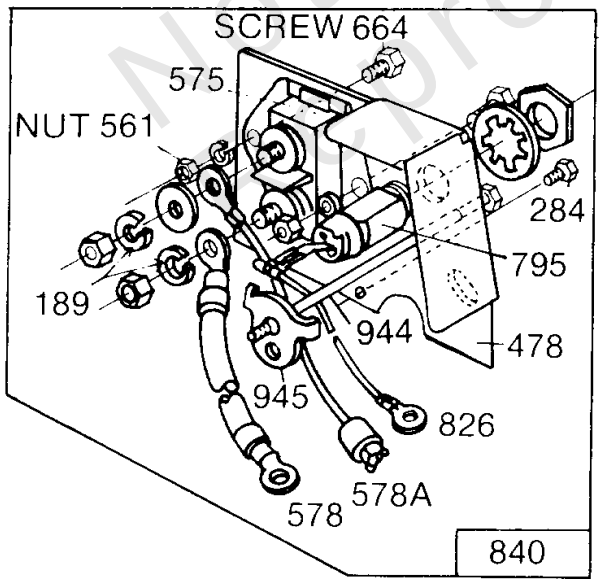

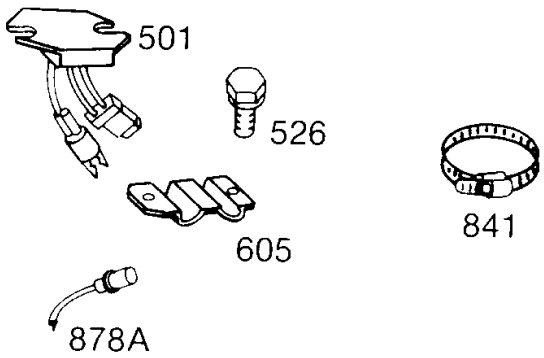

Not For Reproduction

Copyright © Briggs & Stratton. All Rights reserved

Electric Starter,Alternator

REF NO	PART NO	QTY	DESCRIPTION
840	395409		KIT, Panel -(Key Switch) -Used Before Code Date 81102100
841	393514		CLAMP
877B	393537		WIRE/CONNECTOR, Alternator -(Tri Circuit) (9 Amp)
877A	393814		WIRE/CONNECTOR, Alternator -(10 Amp Regulated)
877	393456		WIRE/CONNECTOR, Alternator
878A	393422		WIRE ASSEMBLY -(Dc Only)
878	393362		HARNESS, Alternator -(Dual Circuit)
887	391529		ALTERNATOR -(DC Only)
944	94003		SCREW -(3 5/8 Housing)
945	223159		BRACKET, Starter Motor

Not For Reproduction

Footnotes:

Use 392725 Starter Panel Kit on Engines
Use 392918 Starter Panel Kit on Engines
Use 222751 Starter Panel on Engines

Copyright © Briggs & Stratton. All Rights reserved

Fuel Tank Assembly, Primer

Mfg. No: 195432-0177-01

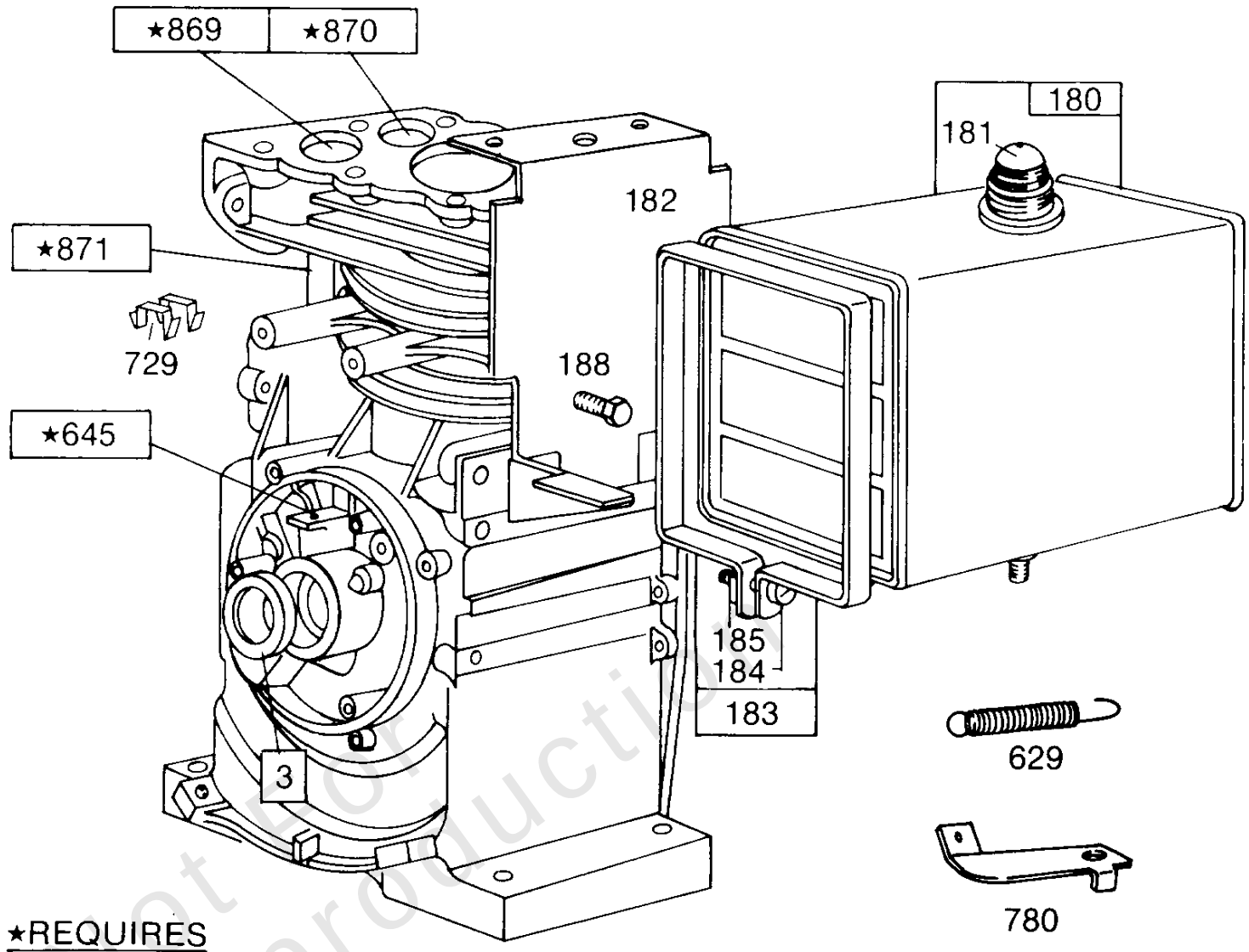

★REQUIRES SPECIAL TOOLS TO INSTALL. SEE REPAIR INSTRUCTION MANUAL.

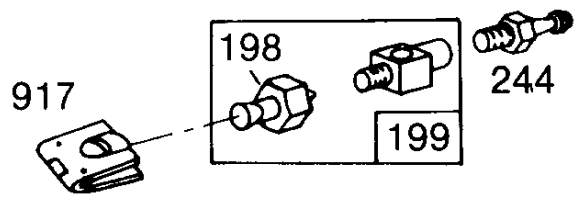

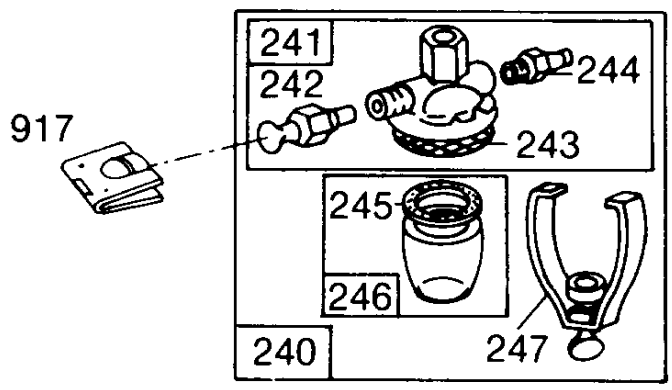

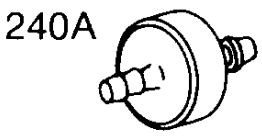

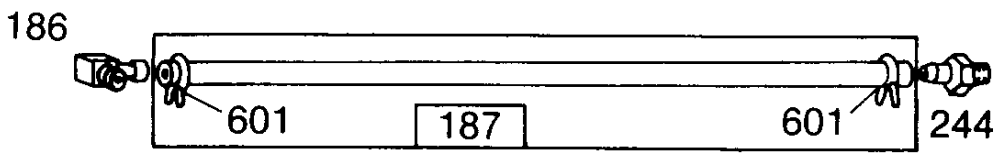

Not for reproduction

Fuel Tank Assembly, Primer

REF NO	PART NO	QTY	DESCRIPTION
3	294606		SEAL, Oil
180	290816		TANK, Fuel -(4 Quart)
181	392301		CAP, Fuel Tank
182	222758		BRACKET, Fuel Tank
183	291367		STRAP, Fuel Tank -(4 Quart)
184	91257		SCREW -(1/4-20 X 1-1/2)
185	90970		NUT -(1/4-20)
186	67218		CONNECTOR, Hose
187	296004		LINE, Fuel -(Cut To Required Length)
187	299146		LINE, Fuel -(Cut To Required Length)
188	93535		SCREW -(5/16-18 X 3/4)
198	293934		VALVE, Fuel Shut Off
199	297563		OUTLET, Tank
240A	394358		FILTER, Fuel -(Fuel Pump) Used on Engines Equipped with Impulse Pump.
240A	298090		FILTER, Fuel
240	393169		STRAINER, Fuel
241	296005		COVER, Fuel Filter
242	295913		VALVE, Fuel Shut Off
243	22547		STRAINER, Fuel
244	230318		CONNECTOR, Hose
245	68477		GASKET, Fuel Bowl -Included in Gasket Set-Part No. 299577
246	298683		BOWL, Fuel Filter
247	99665		YOKE, Bowl
601	93053		CLAMP, Hose -(Green)
629	261137		SPRING, Throttle Return -(Throttle Return)
645	23513		BUSHING, Plunger -(Used only with Breaker Point Ignition)
729	221907		CLIP, Wire
780	222267		ANCHOR, Spring -Uses: 93496 Screw-Mounting
869	211661		SEAT, Valve -(Exhaust)
870	210940		SEAT, Valve -(Exhaust) (Standard)
871	231218		BUSHING, Valve Guide -(Intake)
871	261961		BUSHING, Valve Guide -(Exhaust)
917	223271		VALVE, Handle Shutoff

Not For Reproduction

Footnotes:

Use 392918 Starter Panel Kit on Engines

Use 222751 Starter Panel on Engines

Copyright © Briggs & Stratton. All Rights reserved

Mfg. No: 195432-0177-01

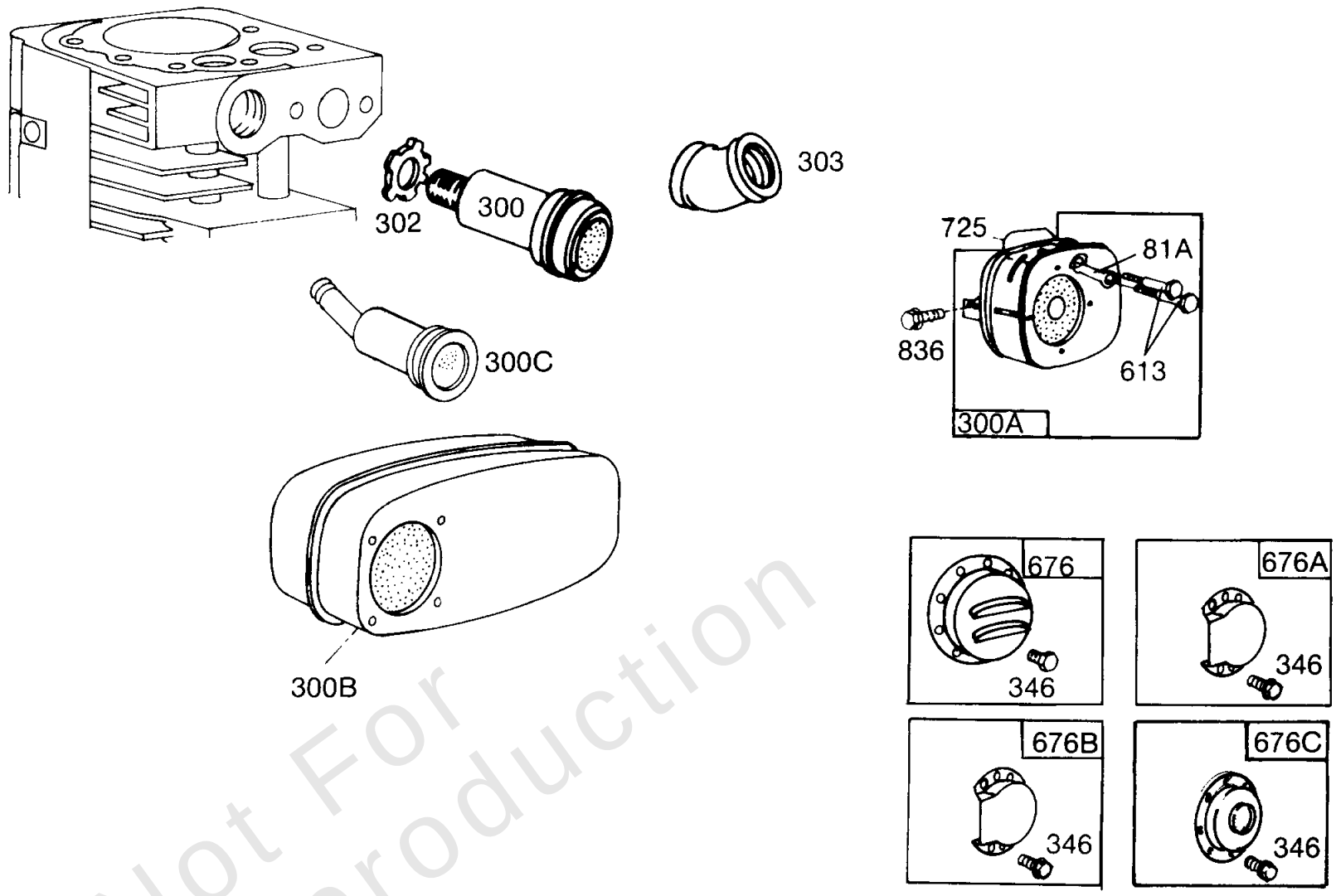

Not For Reproduction

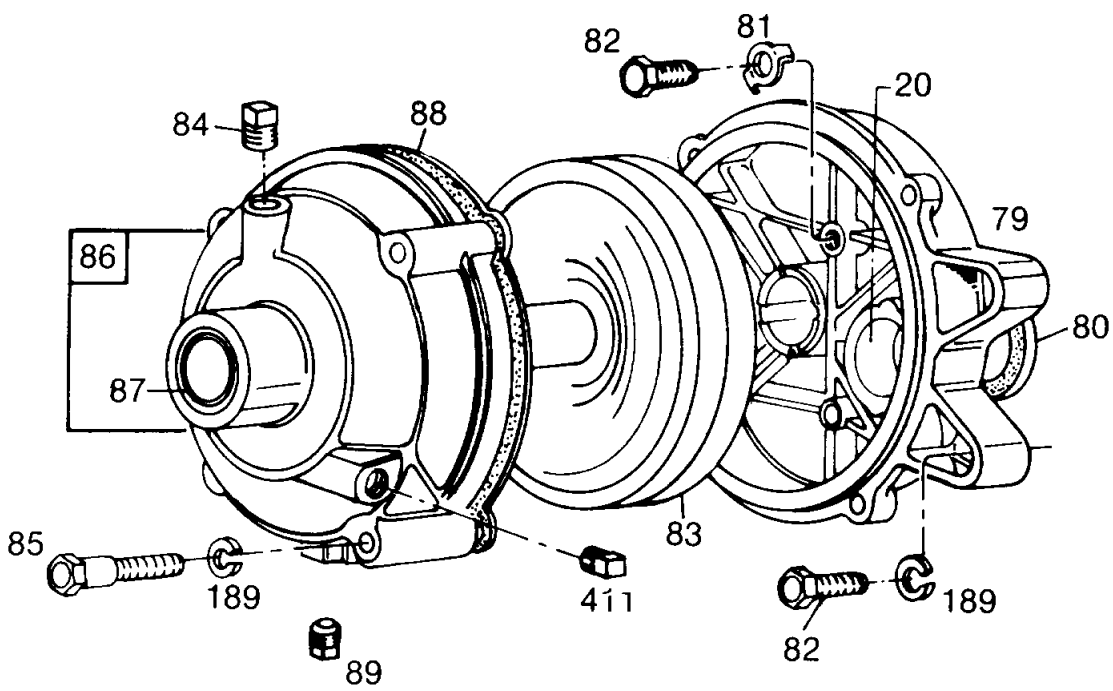

Copyright © Briggs & Stratton. All Rights reserved

Gear Case Assembly,Mufflers

REF NO	PART NO	QTY	DESCRIPTION
20	391086		SEAL, Oil -(Magneto Side)
79	296179		CASE, Gear Reduction
80	27884		GASKET, Gear Cover/Housing
81A	222263		LOCK, Muffler Screw -(3/8 Diameter Bolt Holes)
81	220234		LOCK, Muffler Screw
82	92502		SCREW
83	296052		SHAFT, Auxiliary Drive
84	92617		SCREW -(Gear Case)
85	91386		SCREW -(2)
86	296053		COVER, Gear
87	391086		SEAL, Oil -(Magneto Side)
88	27328		GASKET, Gear Cover/Housing
89	91488		PLUG -(1/8)
189	90366		WASHER
300C	393368		MUFFLER -(20 Degree)
300A	391232		MUFFLER -Uses: 93606 Screw-Guard to Muffler
300A	391313		MUFFLER
300B	392101		MUFFLER -(Super Lo Tone)
300	393010		MUFFLER -(Round Lo Tone)
302	261409		LOCKNUT -(Muffler and Elbow)
303	91464		ELBOW, Exhaust -(90 Degree Street)
346	93705		SCREW -(8-32 X 3/8)
411	93448		PLUG, Oil Drain -(Flush) (1/4-18 NPTF) (Flush) (1/4 18 NPTF)
613	93704		SCREW -(Muffler)
725	221885		SHIELD, Heat
836	93559		SCREW -(Tank) (Fuel Tank)

Not For Reproduction

Footnotes:

Use 222751 Starter Panel on Engines

Copyright © Briggs & Stratton. All Rights reserved

Replacement Engine - US & Canada

REF NO	PART NO	QTY	DESCRIPTION
	20S2320037	1	Replacement Engine
	-----		Top No-Load Speed: 3600 -Trim: E1
	-----		Service Note: If the replacement engine supersedes to or is a Model 200000 series engine, refer to the illustrations located after the conversion data for this model series.
	-----		Service Note: To make the crankshaft center line the same add 695154 spacer kit, other overall dimensions which differ, are shown in the illustrations.
	-----		Service Note: If after making a visual inspection and it is determined the Model 200000 series engine cannot be used because of equipment interference, the original engine should be repaired with a short block and/or individual parts.
	-----		Service Note: If necessary, to make the original engine crankshaft center line the same add 695154 spacer kit.
	-----		Service Note: For all Go-Karts use only a Model 136200 series engine as a replacement, regardless of the original Model.

Not For Reproduction

Copyright © Briggs & Stratton. All Rights reserved