Parts Manual

Mfg. No: 15C103-0614-E8

Copyright © Briggs & Stratton. All Rights reserved

22-Jun-2026

Model Components

Page

Blower Housing/Shrouds, Exhaust System. 4
Camshaft, Crankshaft, Cylinder, Piston Group. 8
Carburetor, Fuel Supply. 12
Controls, Flywheel, Governor Spring, Rewind Starter. 16
Crankcase Cover, Lubrication. 18
Cylinder Head. 20
Electric Starter, Ignition. 24
Replacement Engine - US & Canada. 26

Not For Reproduction

Copyright © Briggs & Stratton. All Rights reserved

Blower Housing/Shrouds, Exhaust System

Mfg. No: 15C103-0614-E8

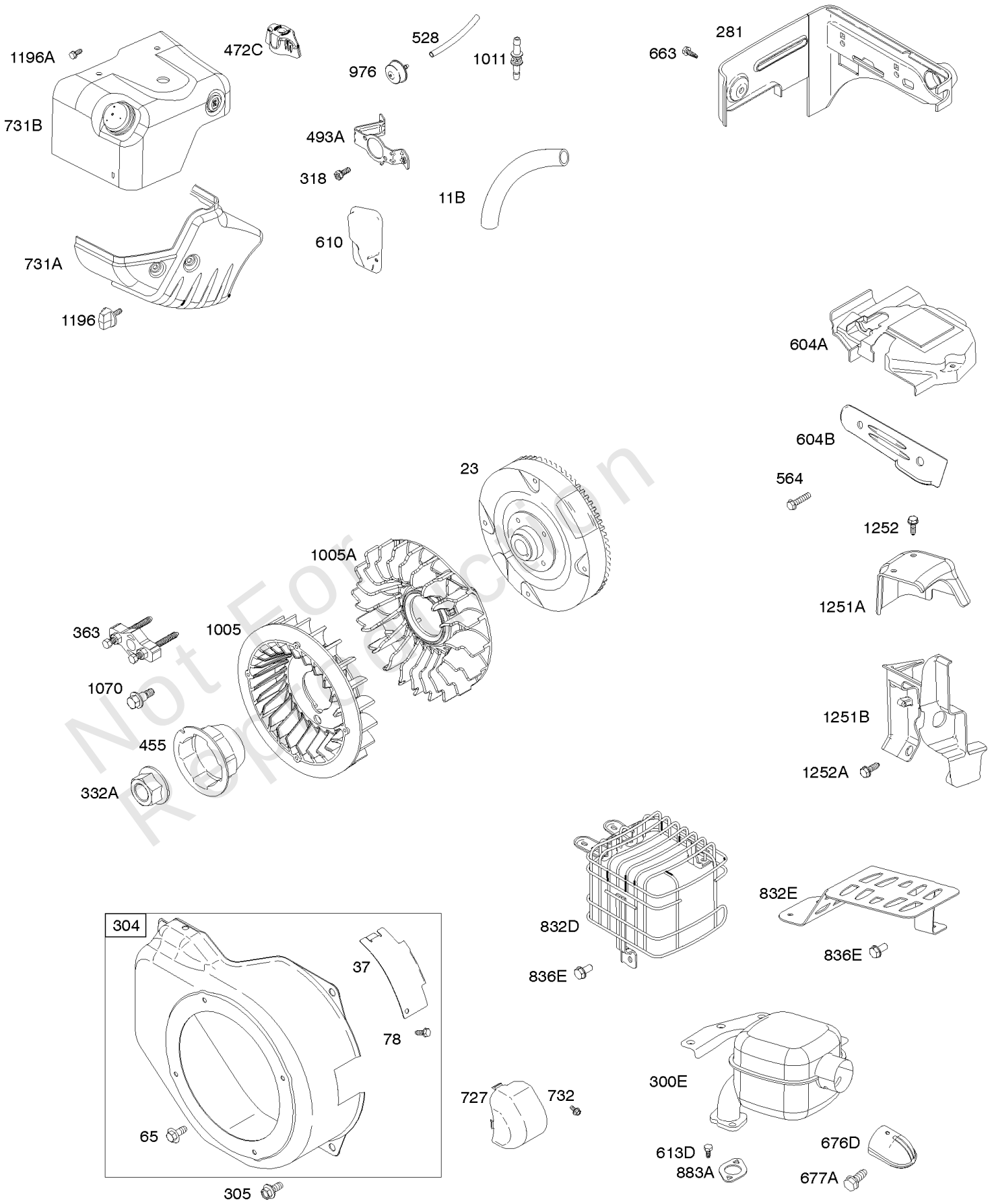

Not For Reproduction

Blower Housing/Shrouds, Exhaust System

REF NO	PART NO	QTY	DESCRIPTION
11B	695745		TUBE, Breather
23	699516		FLYWHEEL
37	699661		GUARD, Flywheel
65	699228		SCREW -(Rewind Starter)
78	699205		SCREW -(Flywheel Guard)
281	596231		PANEL, Control
300E	594222		MUFFLER
304	699598		HOUSING, Blower
305	699481		SCREW -(Blower Housing)
318	798649		SCREW -(Mounting Bracket) (Metric)
318	690370		SCREW -(Mounting Bracket) (SAE)
332A	591988		NUT -(Flywheel)
363	19203		PULLER, Flywheel
455	797431		CUP, Flywheel -Used After Code Date 11071900
455	591302		CUP, Flywheel -Used Before Code Date 10072000
472C	791948		KNOB, Choke Shaft
493A	695744		BRACKET, Mounting
528	793006		HOSE, Primer
564	699854		SCREW -(Control Cover)
604A	793134		COVER, Control
604B	790473		COVER, Control
610	794614		ARRESTER-INTAKE
613D	798517		SCREW -(Muffler)
663	699854		SCREW -(Control Panel)
676D	794213		DEFLECTOR, Muffler
677A	699776		SCREW -(Muffler Deflector)
727	698039		COVER-STARTER DRIVE
731A	794589		HOOD, Snow
731B	798456		HOOD, Snow
732	699200		SCREW -(Starter Drive Cover)
832D	793193		MUFFLER
832E	797003		MUFFLER
836E	699854		SCREW -(Muffler Guard)
883A	691893		GASKET-EXHAUST
976	793382		PRIMER, Carburetor
1005A	794273		FAN, Flywheel
1011	794544		TUBE, Vent
1070	699201		SCREW -(Flywheel Fan)
1196	798785		SCREW -(Snow Hood)
1196A	699854		SCREW -(Snow Hood)

Not For Reproduction

Copyright © Briggs & Stratton. All Rights reserved

Blower Housing/Shrouds, Exhaust System

Mfg. No: 15C103-0614-E8

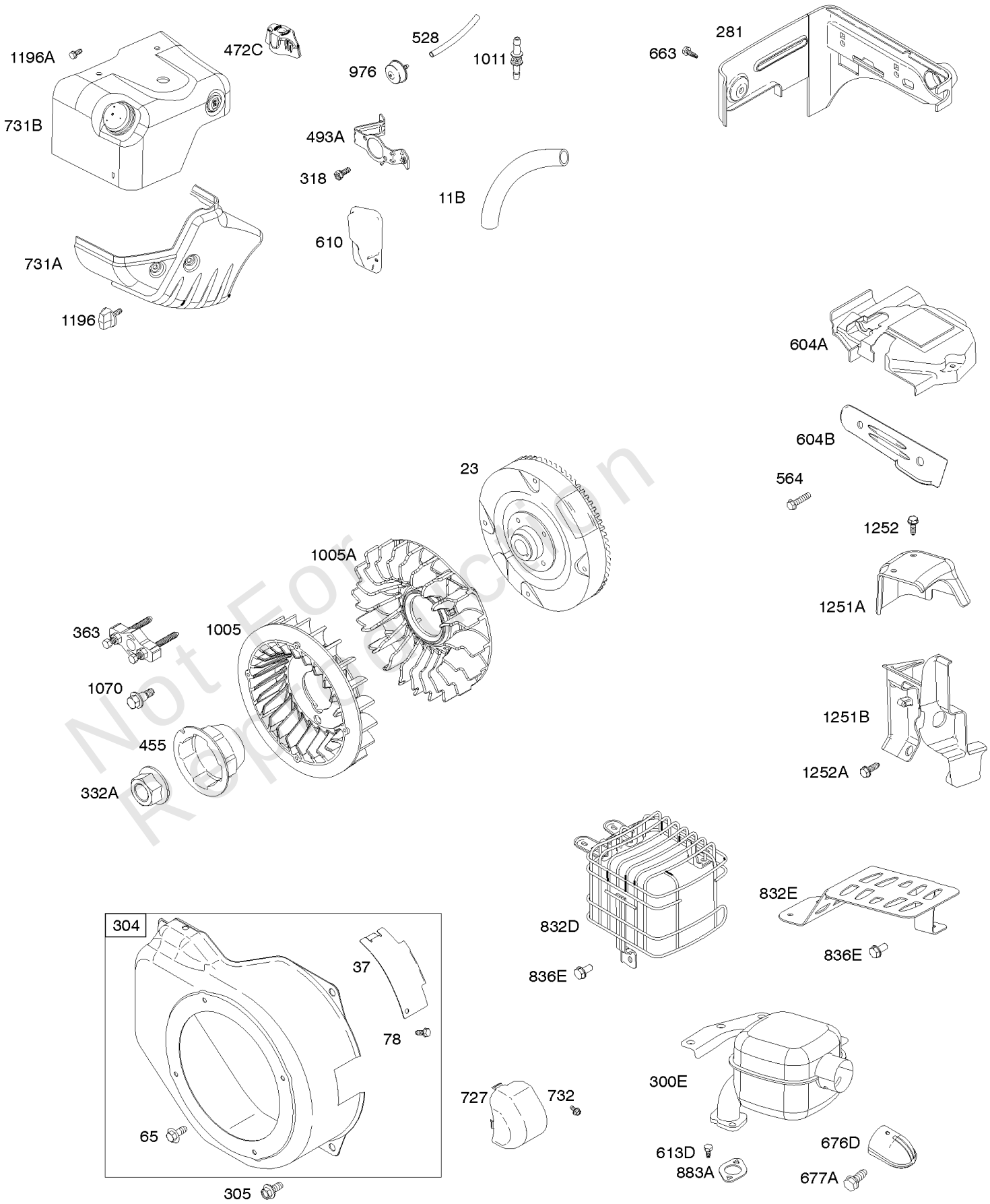

Not For Reproduction

Blower Housing/Shrouds, Exhaust System

REF NO	PART NO	QTY	DESCRIPTION
1251A	594231		SHIELD, Snow
1251B	594228		SHIELD, Snow
1252	699234		SCREW -(Snow Shield)
1252A	699491		SCREW -(Snow Shield)

Not For Reproduction

Copyright © Briggs & Stratton. All Rights reserved

Camshaft, Crankshaft, Cylinder, Piston Group

Mfg. No: 15C103-0614-E8

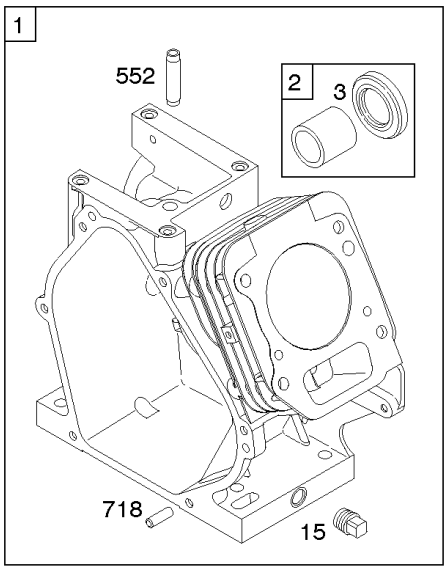

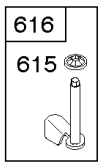

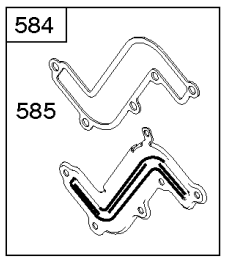

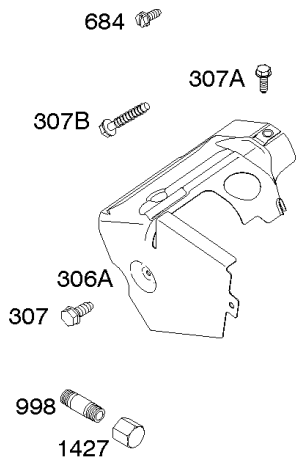

1319 WARNING LABEL

***REQUIRED** when replacing parts with warning labels affixed.*

1319A WARNING LABEL

***REQUIRED** when replacing parts with warning labels affixed.*

1330 REPAIR MANUAL

1036 EMISSIONS LABEL

1019 LABEL KIT

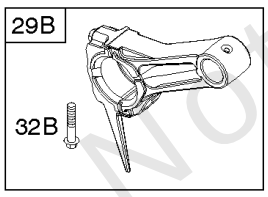

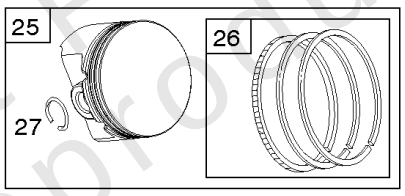

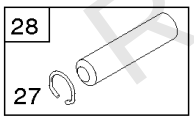

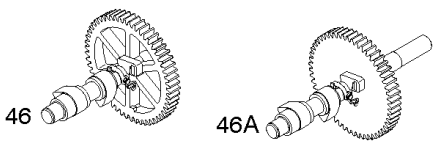

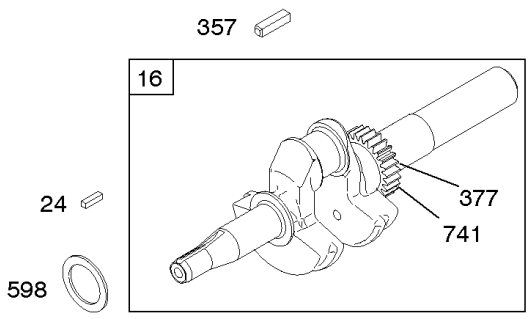

358B ENGINE GASKET SET

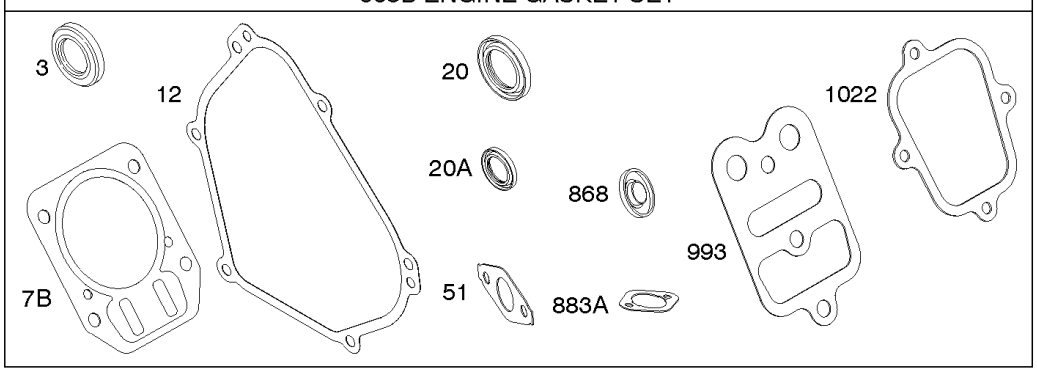

Not For Reproduction

Camshaft, Crankshaft, Cylinder, Piston Group

REF NO	PART NO	QTY	DESCRIPTION
1	794188		CYLINDER ASSEMBLY
2	796961		KIT, Bushing/Seal -(Magneto Side)
3	299819S		SEAL, Oil -(Magneto Side)
7B	791716		GASKET, Cylinder Head
12	699485		GASKET, Crankcase
15	691686		PLUG-OIL DRAIN
16	797079		CRANKSHAFT
20	692550		SEAL-OIL -(PTO Side)
20A	691952		SEAL, Oil -(PTO Side) (Auxiliary Drive)
24	796335		KEY, Flywheel
25	791791		PISTON ASSEMBLY -(.020 Oversize)
25	791786		PISTON ASSEMBLY -(Standard)
26	791792		SET, Ring -(.020" Oversize)
26	791787		SET, Ring -(Standard)
27	690975		LOCK, Piston Pin
28	690229		PIN, Piston -(Standard)
29B	791783		ROD, Connecting
32B	791784		SCREW -(Connecting Rod)
46	693404		CAMSHAFT
46A	695285		CAMSHAFT
51	692555		GASKET, Intake -(2 Required)
82	690369		SCREW -(Gear Reduction Case)
306A	594227		SHIELD, Cylinder
307	794822		SCREW -(Cylinder Shield)
307A	699234		SCREW -(Cylinder Shield)
307B	790557		SCREW -(Cylinder Shield)
357	692191		KEY, Drive Pulley
358B	791797		GASKET SET, Engine
377	690979		KEY, Woodruff
552	692346		BUSHING, Governor Crank
584	791759		COVER, Breather Passage
585	791760		GASKET, Breather Passage
598	220624		SHIM, End Play -(Crankshaft or Camshaft Bearing)
615	692576		RETAINER, Governor Shaft
616	692547		CRANK, Governor
684	793369		SCREW -(Breather Passage Cover)
718	592860		PIN, Locating
741	695087		GEAR, Timing -(Metal)

Not For Reproduction

Copyright © Briggs & Stratton. All Rights reserved

Camshaft, Crankshaft, Cylinder, Piston Group

Mfg. No: 15C103-0614-E8

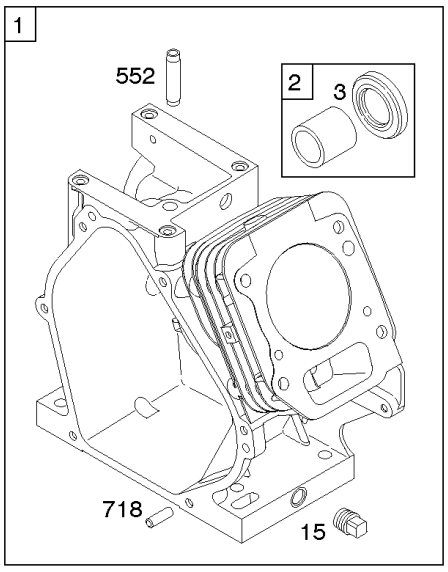

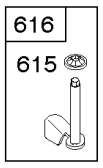

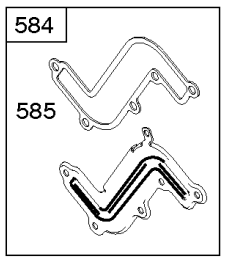

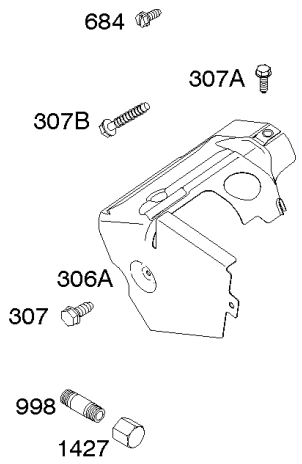

1319 WARNING LABEL

***REQUIRED** when replacing parts with warning labels affixed.*

1319A WARNING LABEL

***REQUIRED** when replacing parts with warning labels affixed.*

1330 REPAIR MANUAL

1036 EMISSIONS LABEL

1019 LABEL KIT

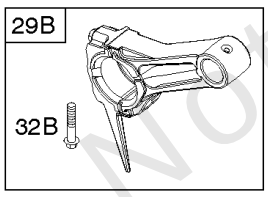

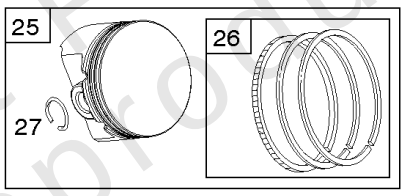

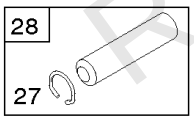

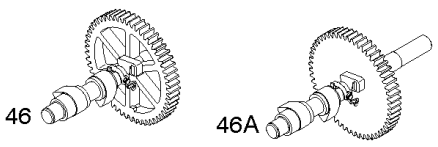

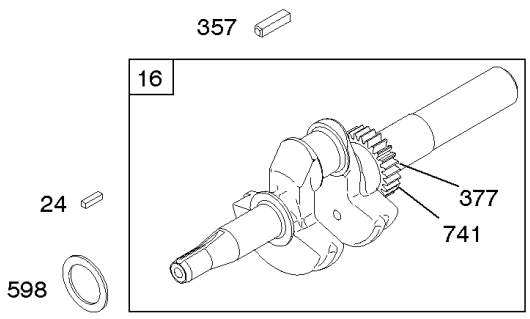

358B ENGINE GASKET SET

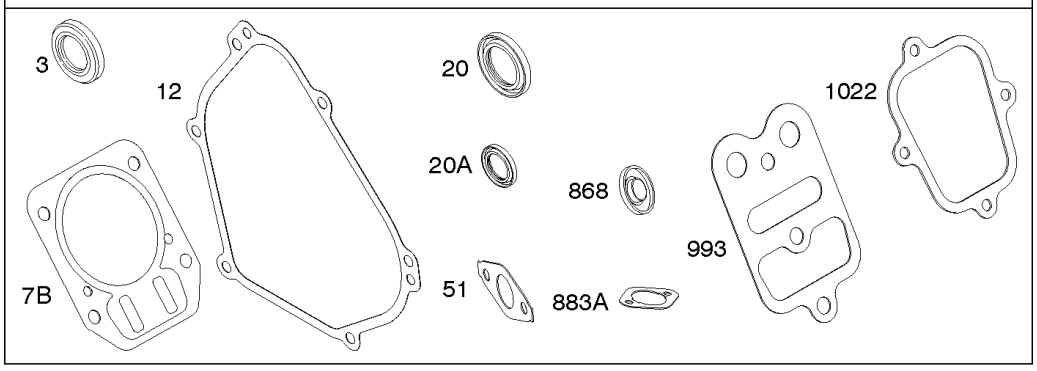

Not For Reproduction

REF NO	PART NO	QTY	DESCRIPTION
741	593499		GEAR, Timing -(Plastic)
868	795440		SEAL-VALVE
883A	691893		GASKET-EXHAUST
993	694088		GASKET, Cylinder Head Plate
998	696683		PIPE, Oil -(4)
998	792928		PIPE, Oil -(2 1/2)
998	794701		PIPE, Oil -(5)
1019	792211		KIT, Label
1022	691890		GASKET-ROCKER COVER
1036	-----		Label-Emissions -(Available From A Briggs & Stratton Authorized Dealer)
1319	794467		LABEL, Warning
1319A	797669		LABEL, Warning
1330	272147		MANUAL, Repair
1427	695757		PLUG, Oil Drain

Not For Reproduction

Copyright © Briggs & Stratton. All Rights reserved

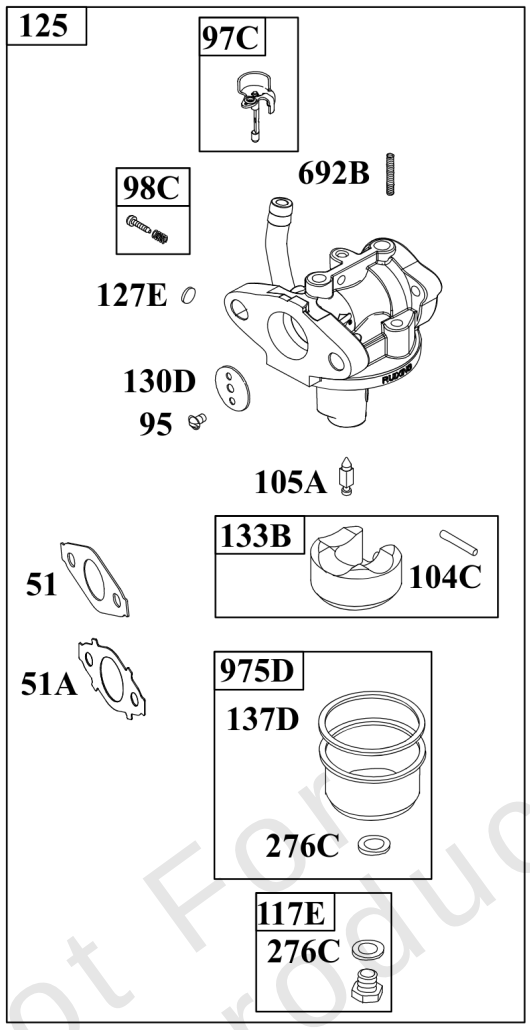

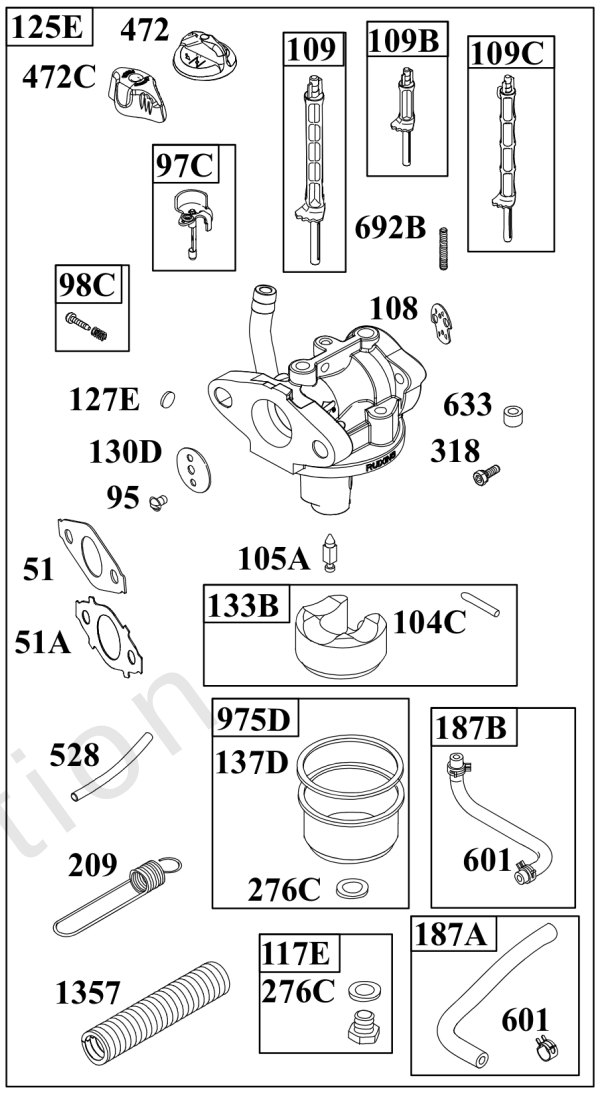

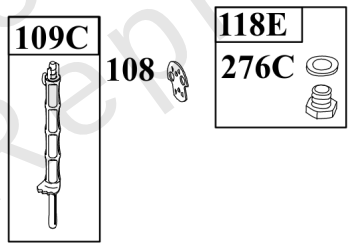

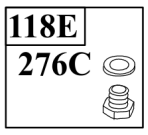

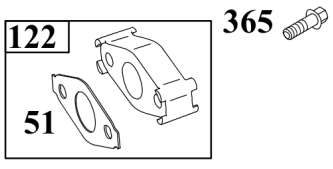

121D CARBURETOR OVERHAUL KIT

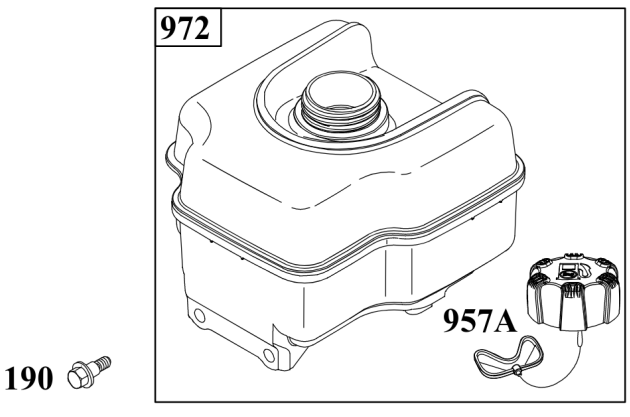

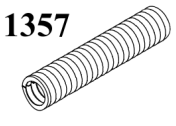

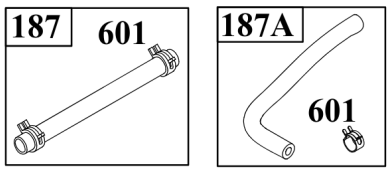

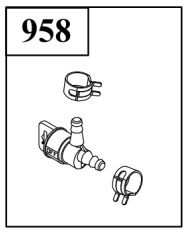

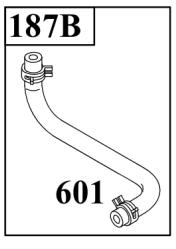

Not For Reproduction

REF NO	PART NO	QTY	DESCRIPTION
51	692555		GASKET, Intake -(2 Required)
51A	791718		GASKET, Intake
95	691636		SCREW -(Throttle Valve)
97C	797628		SHAFT, Throttle
98C	797156		KIT, Idle Speed
104C	797622		PIN, Float Hinge
105A	797139		VALVE, Float Needle
108	796993		VALVE, Choke
109	791957		SHAFT, Choke
109B	695729		SHAFT, Choke
109C	791954		SHAFT, Choke
117E	590906		JET, Main -(Standard) -Used After Code Date 11080700
117E	798930		JET, Main -(Standard) -Used Before Code Date 11080800
118E	590440		JET, Main -(High Altitude) -Used After Code Date 11080700
118E	590440		JET, Main -(High Altitude) -Used Before Code Date 11080800
118E	798661		JET, Main -(High Altitude) (High Altitude) -Used Before Code Date 11080800
121D	797634		KIT, Carburetor Overhaul
122	791717		SPACER, Carburetor
125	594014		CARBURETOR -Used Before Code Date 11080800
125	594015		CARBURETOR -Used After Code Date 11080700
127E	797633		PLUG, Welch
130D	797630		VALVE, Throttle
133B	797136		FLOAT, Carburetor
137D	798932		GASKET, Float Bowl
163B	696024		GASKET, Air Cleaner -(Flat Panel Air Cleaner)
187	791766		LINE, Fuel -(Cut To Required Length)
187A	791867		LINE, Fuel -(Molded) -Used Before Code Date 10071000
187A	798908		LINE, Fuel -(Molded) -Used After Code Date 10070900
187B	791874		LINE, Fuel -(Molded) -Used Before Code Date 10071000
187B	798907		LINE, Fuel -(Molded) -Used After Code Date 10070900
190	699220		SCREW -(Fuel Tank)
209	692571		SPRING, Governor -(No Color) -Used Before Code Date 10071000

Not For Reproduction

Copyright © Briggs & Stratton. All Rights reserved

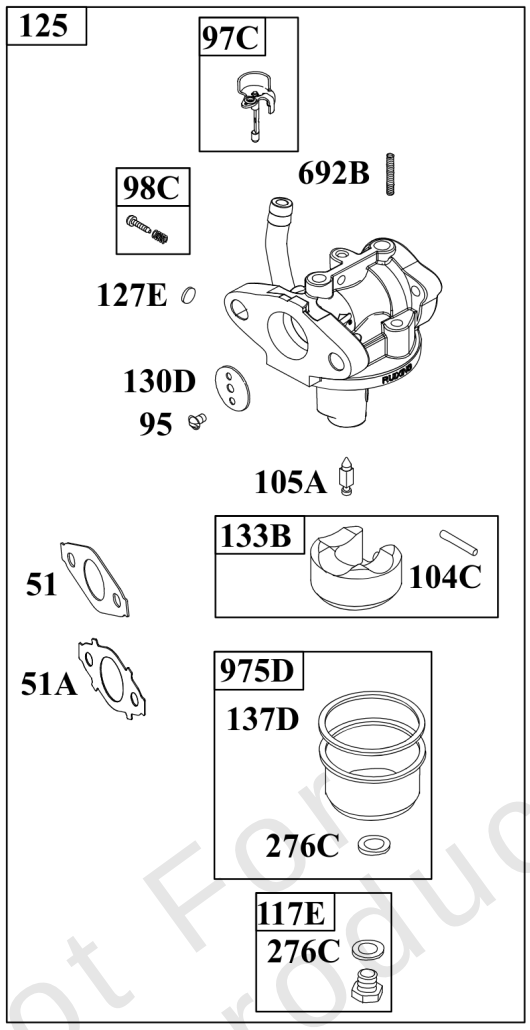

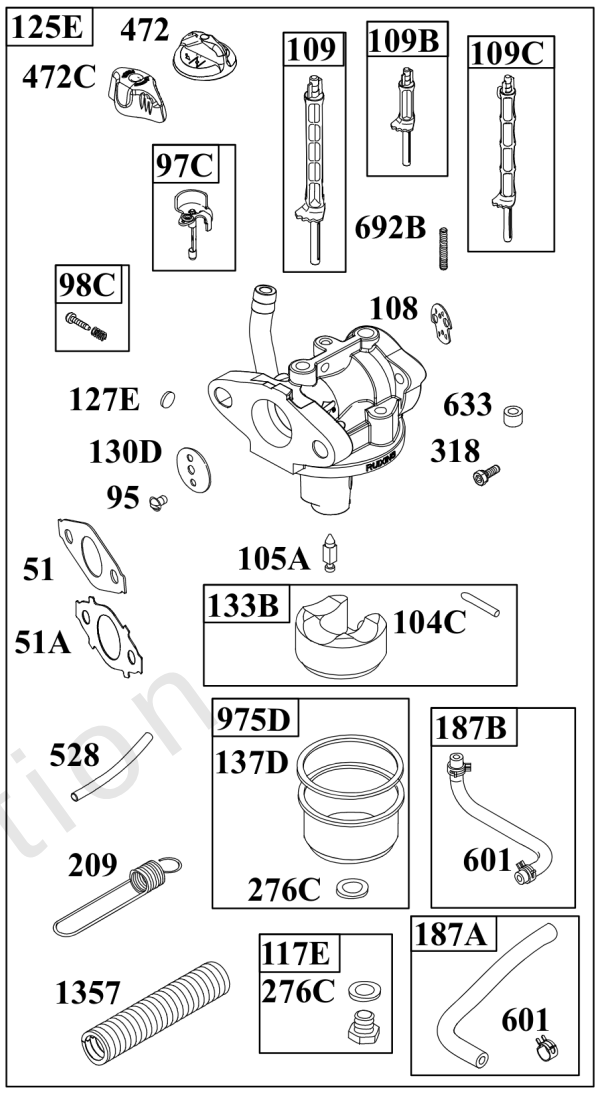

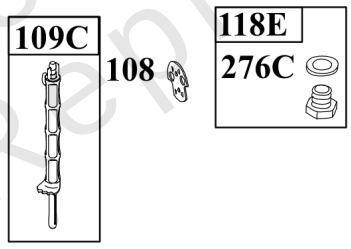

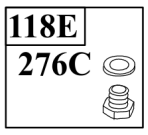

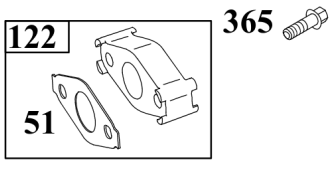

121D CARBURETOR OVERHAUL KIT

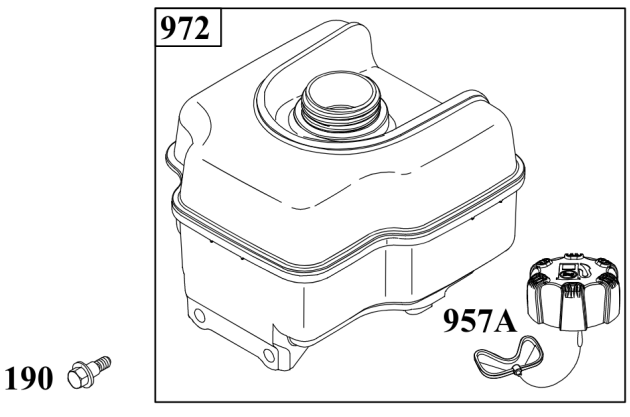

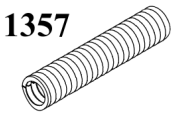

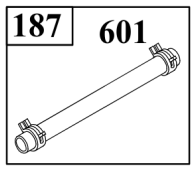

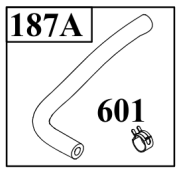

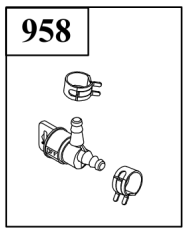

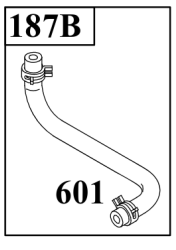

Not For Reproduction

Carburetor, Fuel Supply

REF NO	PART NO	QTY	DESCRIPTION
276C	797632		WASHER, Sealing
318	798649		SCREW -(Mounting Bracket) (Metric)
318	690370		SCREW -(Mounting Bracket) (SAE)
365	699484		SCREW -(Carburetor/Throttle Body)
472	791958		KNOB, Choke Shaft
472C	791948		KNOB, Choke Shaft
528	793006		HOSE, Primer
601	791850		CLAMP, Hose
633	693867		SEAL, Choke/Throttle Shaft
692B	797624		SPRING, Detent
957	792647		CAP, Fuel Tank -(Fresh Start)
957	795027		CAP, Fuel Tank -(Text Free)
957A	799719		CAP, Fuel Tank -(Carbon In Cap)
957B	698109		CAP, Fuel Tank
958	698180		VALVE, Fuel Shutoff
972	799863		TANK, Fuel
975D	798931		BOWL, Float
1357	794700		SLEEVE, Fuel Line

Not For Reproduction

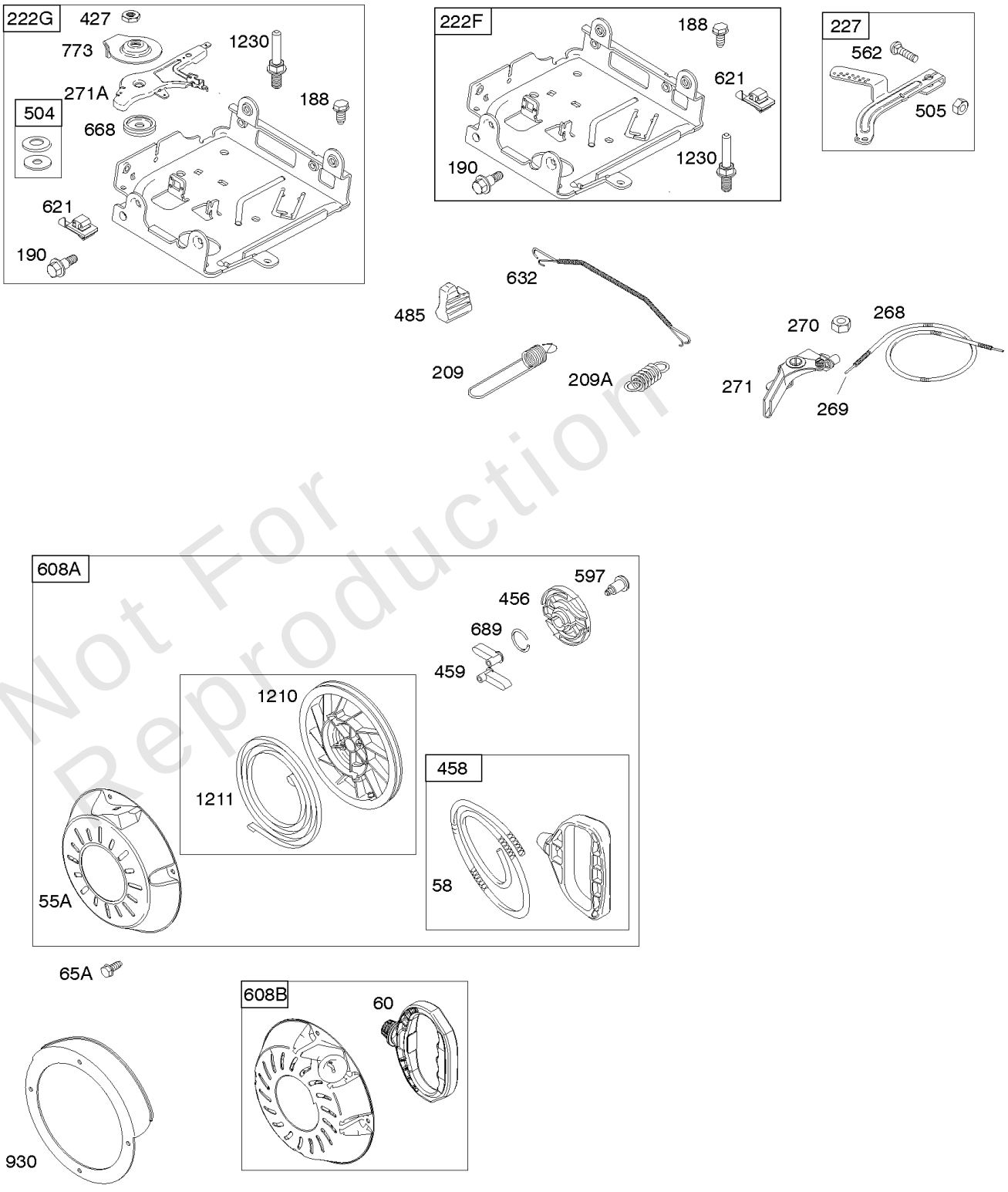

Not For Reproduction

Controls, Flywheel, Governor Spring, Rewind Starter

REF NO	PART NO	QTY	DESCRIPTION
55A	696710		HOUSING, Rewind Starter
58	693389		ROPE, Starter -(Cut To Required Length)
65A	699851		SCREW -(Rewind Starter)
188	699479		SCREW -(Control Bracket)
190	699220		SCREW -(Fuel Tank)
209	692571		SPRING, Governor -(No Color) -Used Before Code Date 10071000
209A	693710		SPRING, Governor -(Black) -Used After Code Date 10070900
222F	793100		BRACKET, Control
222G	793109		BRACKET, Control
227	794367		LEVER, Governor Control
268	691025		CASING, Control Wire -(Cut To Required Length)
269	691026		WIRE, Control -(Cut To Required Length)
270	691027		NUT -(Control Wire Casing) (Control Wire Casing)
271	691028		LEVER, Control
271A	698038		LEVER, Control
427	694255		NUT -(Control Bracket) (SAE)
427	798458		NUT -(Control Bracket) (Metric)
456	692299		PLATE-PAWL FRICTION
458	699334		GRIP, Starter Rope
459	281505S		PAWL-RATCHET
485	695755		KNOB, Control
504	695383		SET, Friction Washer
505	691251		NUT -(Governor Control Lever)
562	691119		BOLT -(Governor Control Lever)
597	691696		SCREW -(Pawl Friction Plate)
608A	699335		STARTER-REWIND -Used Before Code Date 10072000
608B	797430		STARTER, Rewind -Used After Code Date 10071900
621	692310		SWITCH, Stop
632	692653		SPRING/LINK, Mechanical Governor
668	694257		SPACER
689	691855		SPRING-FRICTION
773	694258		RETAINER
930	696709		GUARD, Rewind
1210	498144		PULLEY/SPRING ASSY -(Pulley)
1211	498144		PULLEY/SPRING ASSY -(Spring)
1230	699847		STUD -(Control Bracket)

Not For Reproduction

Copyright © Briggs & Stratton. All Rights reserved

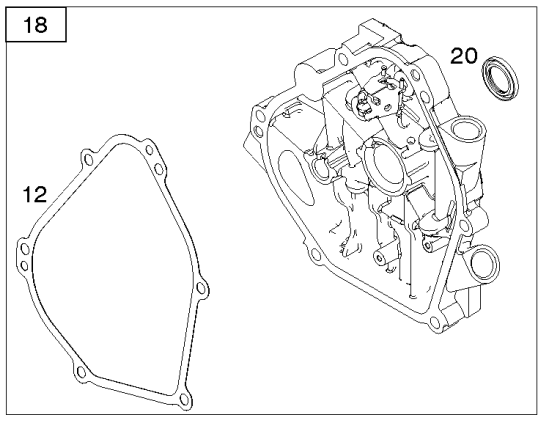

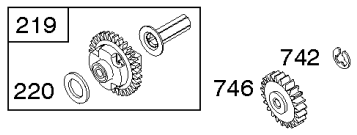

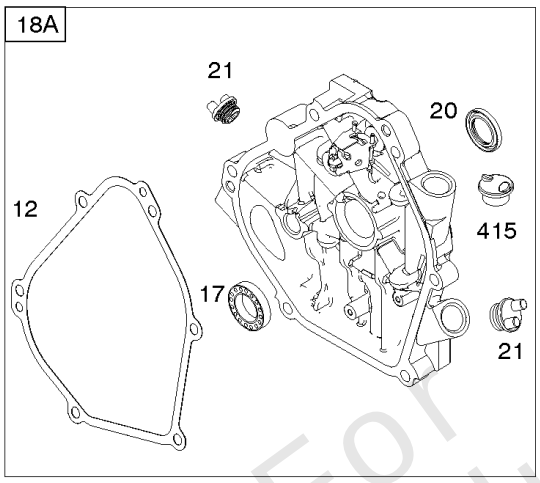

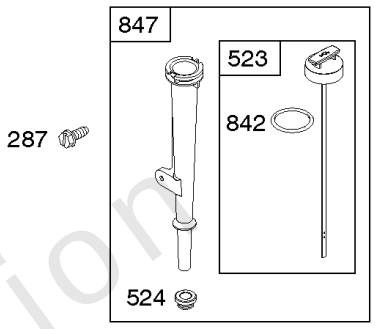

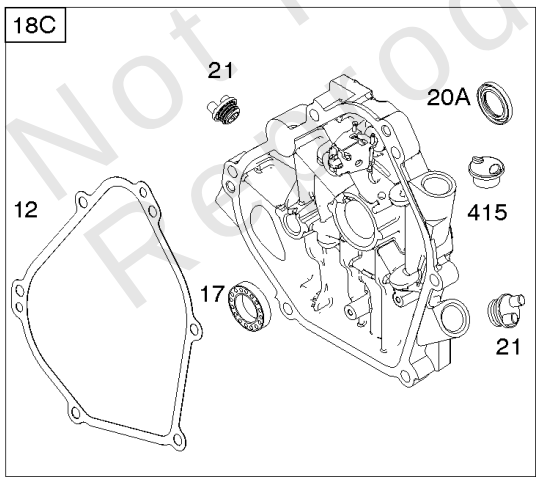

Not For Reproduction

Crankcase Cover, Lubrication

REF NO	PART NO	QTY	DESCRIPTION
12	699485		GASKET, Crankcase
17	798538		BEARING, Ball
18A	699696		COVER, Crankcase
20	692550		SEAL-OIL -(PTO Side)
20A	691952		SEAL, Oil -(PTO Side) (Auxiliary Drive)
21	281658S		CAP, Oil Fill
22	594519		SCREW -(Crankcase Cover/Sump)
219	693578		GEAR, Governor
220	691724		WASHER -(Governor Gear)
287	699234		SCREW -(Dipstick Tube)
415	693463		PLUG
523	-----		Dipstick -(Not Serviced Separate. Service With Ref #847 Dipstick/Tube Assembly). -Used Before Code Date 10022200
523	798469		DIPSTICK -Used After Code Date 10022100
524	281370S		SEAL, Dipstick Tube -(Dipstick Tube)
742	692564		RETAINER, E Ring
746	790278		GEAR-IDLER
842	795015		SEAL, O-Ring -(Dipstick Tube)
847	798468		DIPSTICK/TUBE ASSEMBLY

Not For Reproduction

Cylinder Head

Mfg. No: 15C103-0614-E8

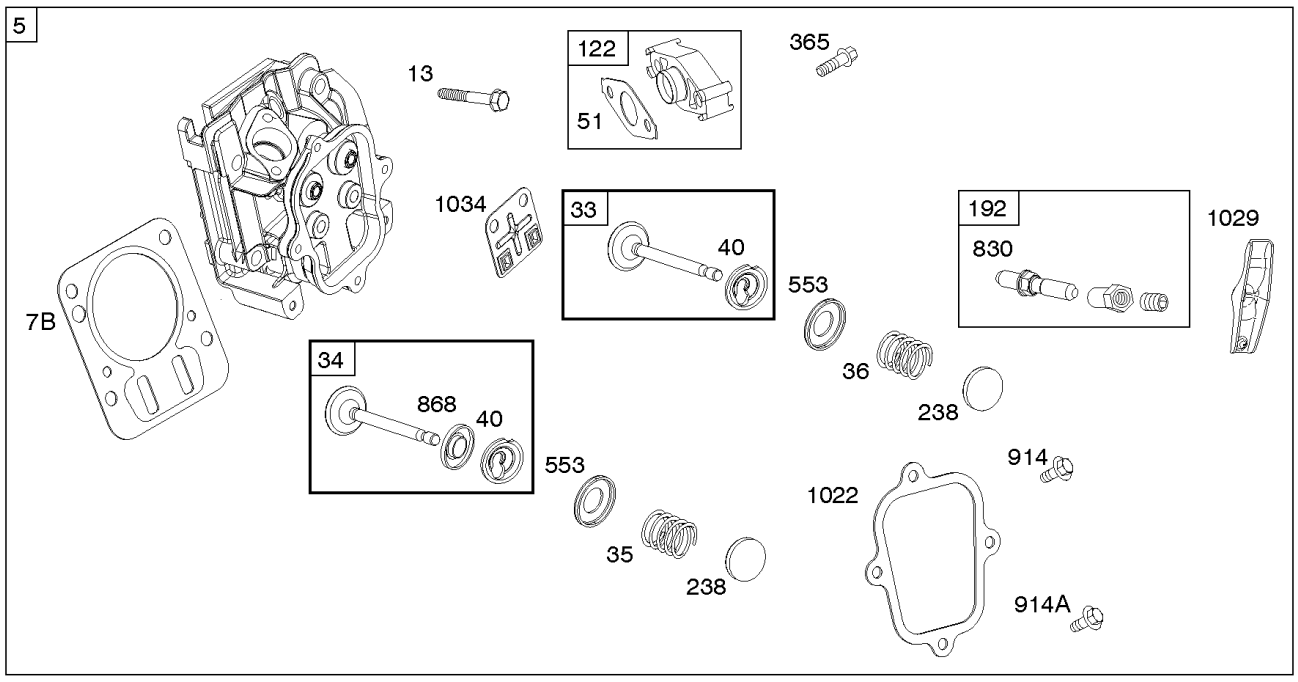

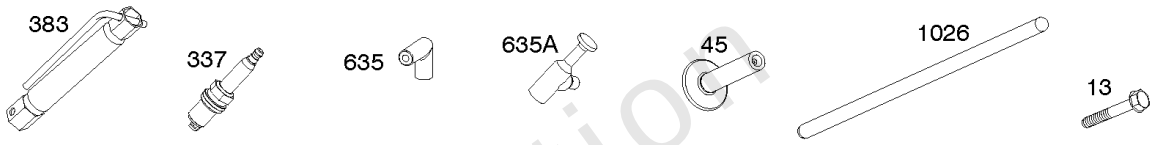

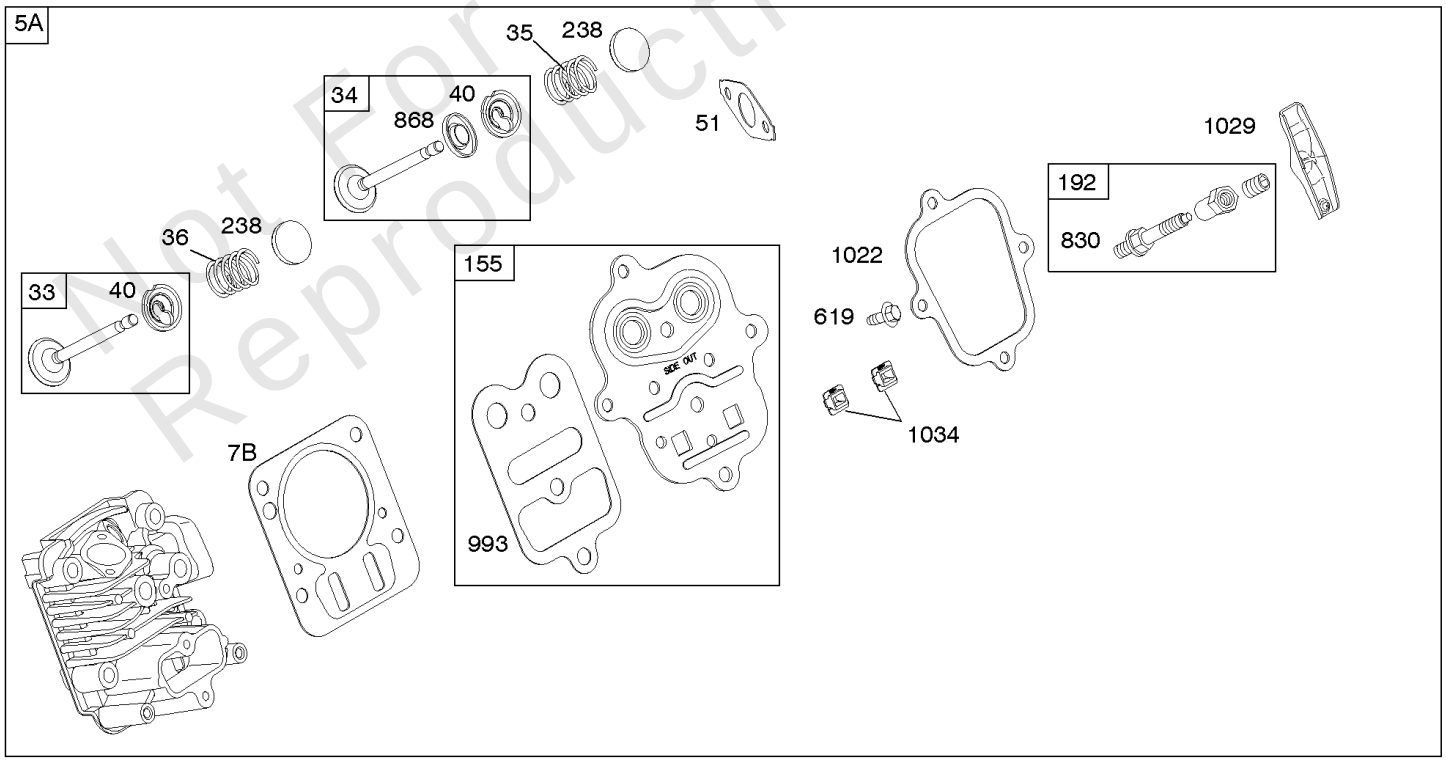

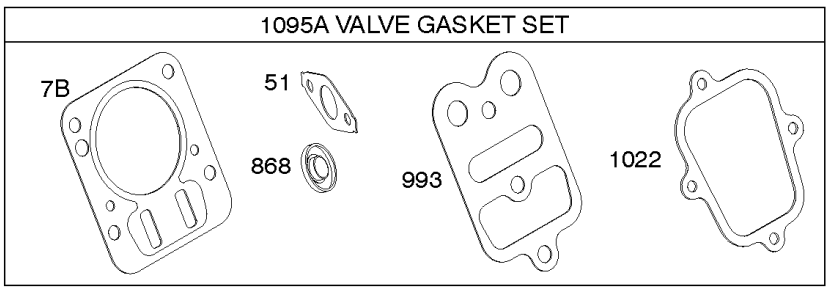

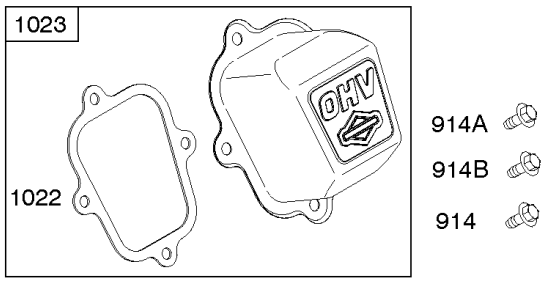

Not For Reproduction

Cylinder Head

REF NO	PART NO	QTY	DESCRIPTION
5	594701		HEAD, Cylinder -Used After Code Date 14090400
5A	791720		HEAD, Cylinder -Used Before Code Date 14090500
7B	791716		GASKET, Cylinder Head
13	594518		SCREW -(Cylinder Head) -Used After Code Date 14090400
13	699482		SCREW -(Cylinder Head) -Used Before Code Date 14090500
33	499642		VALVE, Exhaust
34	795443		VALVE, Intake
35	691304		SPRING, Valve -(Intake)
36	691304		SPRING, Valve -(Exhaust)
40	692194		RETAINER, Valve
45	690977		TAPPET, Valve
51	692555		GASKET, Intake -(2 Required)
122	791717		SPACER, Carburetor
155	698214		PLATE, Cylinder Head -(SAE) -Used Before Code Date 09061800
155	797442		PLATE, Cylinder Head -(Metric) -Used After Code Date 09061700
192	694543		ADJUSTER-ROCKER ARM -(SAE) -Used Before Code Date 09061800
192	797440		ADJUSTER. Rocker Arm -(Metric) -Used After Code Date 09061700
238	691300		CAP, Valve
337	491055S		PLUG, Spark -(Resistor)
337	84007216	2	PLUG, SPARK -(China Only)
365	699484		SCREW -(Carburetor/Throttle Body)
383	19576S		WRENCH, Spark Plug
553	594515		RETAINER, Valve
619	699481		SCREW -(Cylinder Head Plate)
635	692076		BOOT, Spark Plug
635A	798619		BOOT-SPARK PLUG
830	797441		STUD, Rocker Arm -(Rocker Arm) (Metric) -Used After Code Date 09061700 -Used Before Code Date 14090400
830	694544		STUD-ROCKER ARM -(Rocker Arm) (SAE) -Used Before Code Date 09061800
830	594230		STUD, Rocker Arm -(Rocker Arm) -Used After Code Date 14090300
868	795440		SEAL-VALVE
914	699481		SCREW -(Rocker Cover) (Bottom)

Not For Reproduction

Cylinder Head

Mfg. No: 15C103-0614-E8

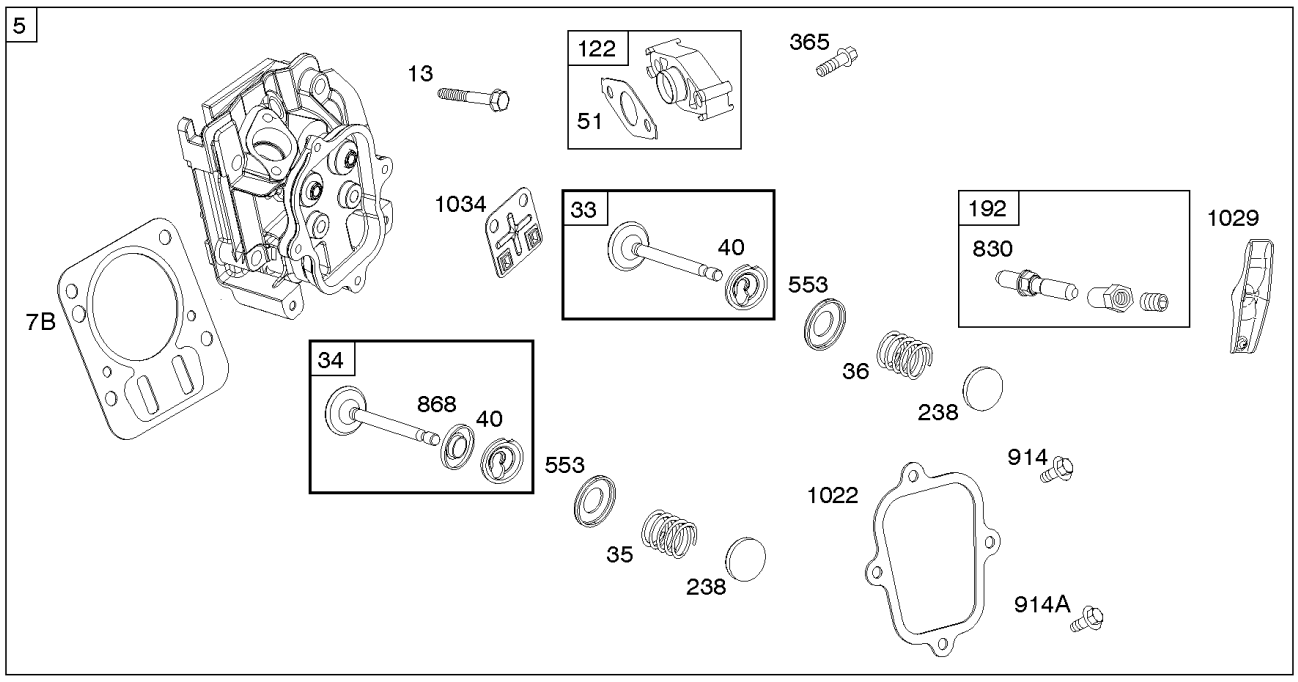

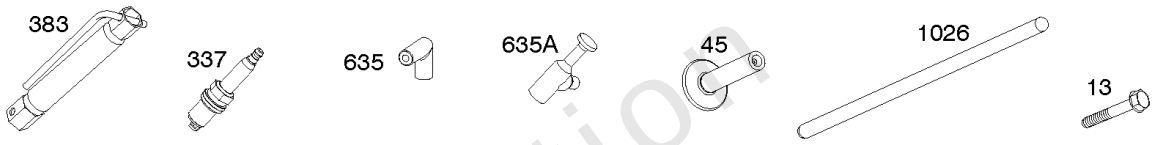

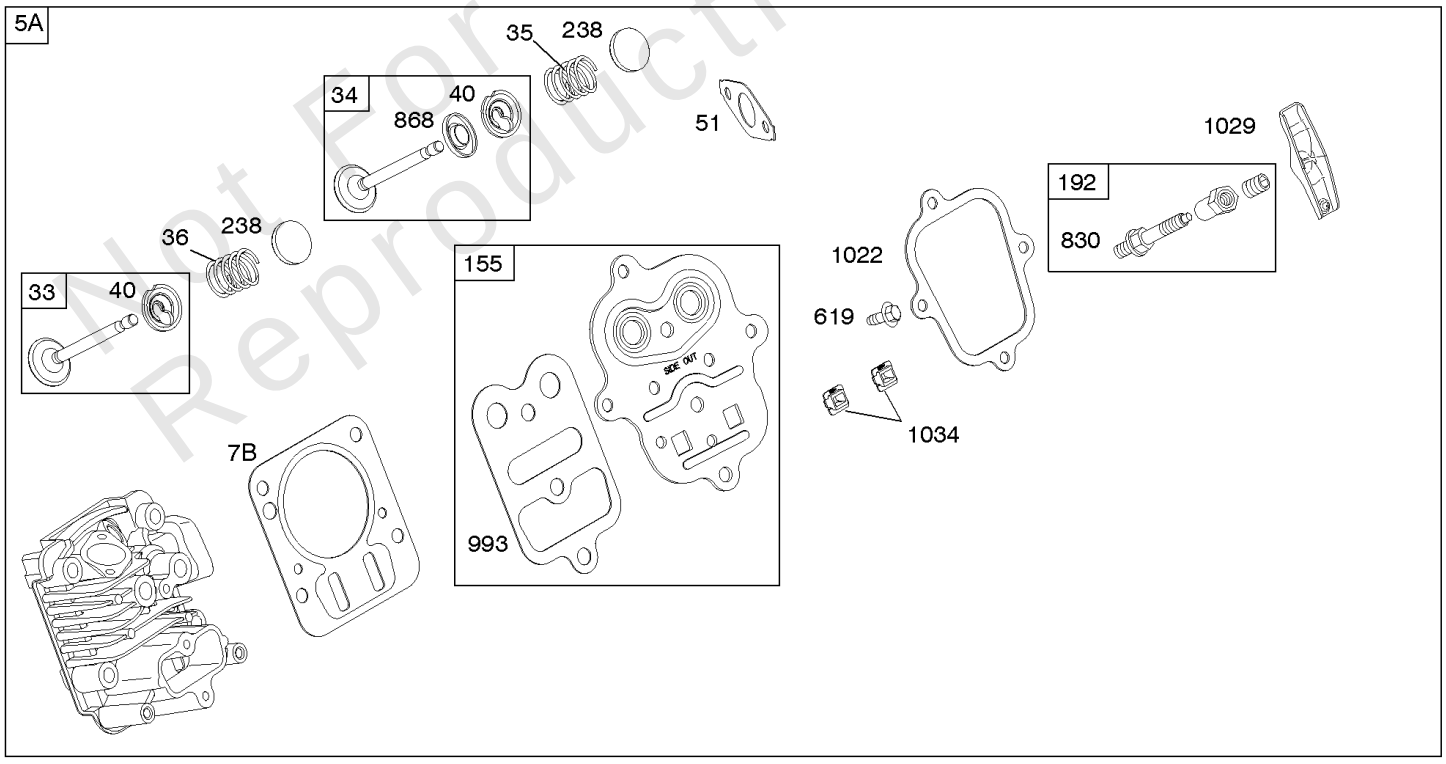

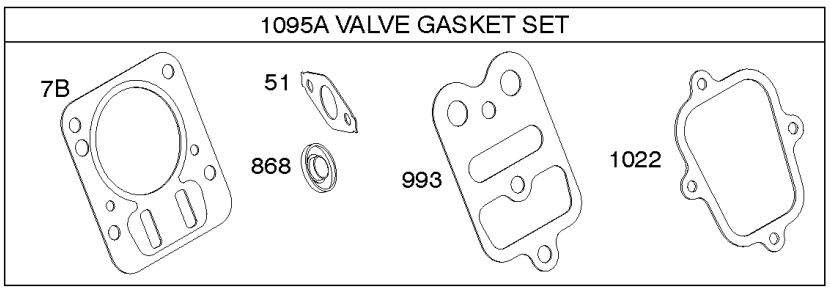

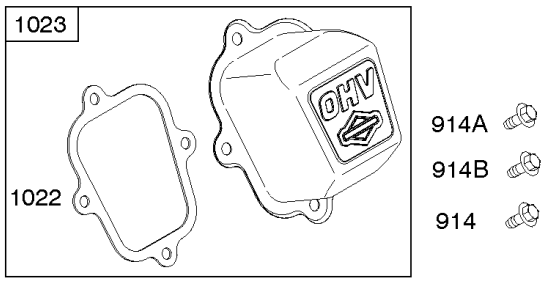

Not For Reproduction

Cylinder Head

REF NO	PART NO	QTY	DESCRIPTION
914A	594517		SCREW -(Rocker Cover) (Quantity 1 Top Or Center) -Used After Code Date 15090400
914A	692557		SCREW -(Rocker Cover) (Top) -Used Before Code Date 09061800
914A	797444		SCREW -(Rocker Cover) (Quantity 1 Top Or Center) -Used After Code Date 09061700 -Used Before Code Date 14090500
914B	691108		SCREW -(Rocker Cover) (Center) -Used Before Code Date 09061800
993	694088		GASKET, Cylinder Head Plate
1022	691890		GASKET-ROCKER COVER
1023	499924		COVER, Rocker
1026	790287		ROD, Push
1029	691230		ARM, Rocker -(SAE) -Used Before Code Date 09061800
1029	797443		ARM, Rocker -(Metric) -Used After Code Date 09061700
1034	594229		GUIDE, Push Rod -Used After Code Date 14090300
1034	691343		GUIDE, Push Rod -Used Before Code Date 14090400
1095A	791798		GASKET SET, Valve

Not For Reproduction

Mfg. No: 15C103-0614-E8

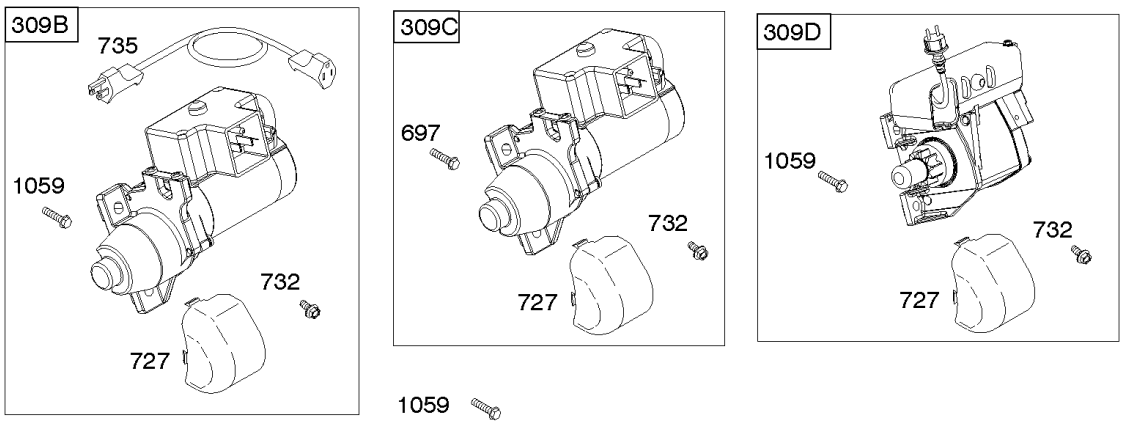

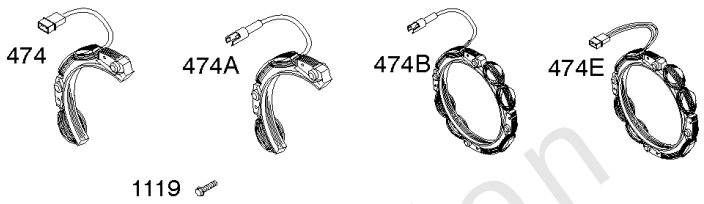

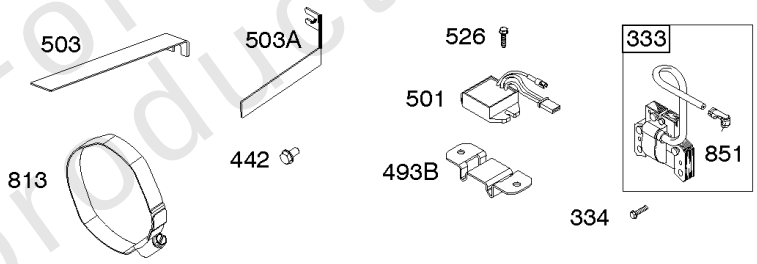

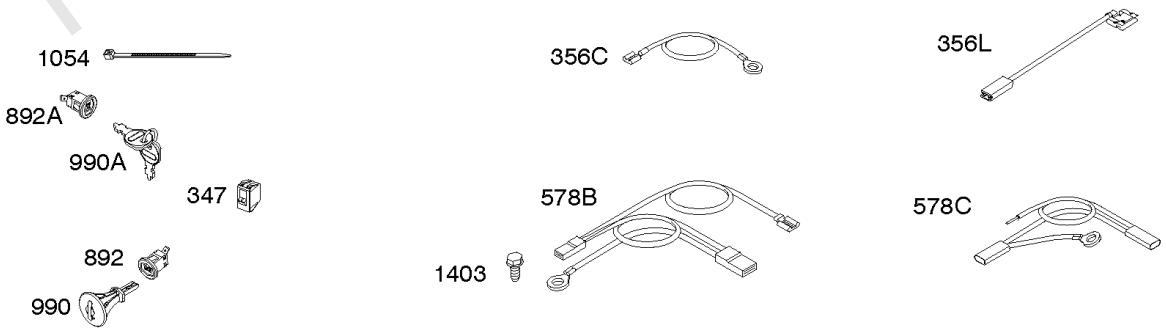

Not For Reproduction

Copyright © Briggs & Stratton. All Rights reserved

Electric Starter, Ignition

REF NO	PART NO	QTY	DESCRIPTION
309B	798884		MOTOR, Starter -(120 Volt)
333	796964		ARMATURE, Magneto
334	699477		SCREW -(Magneto Armature)
347	795333		SWITCH, Rocker
356C	695630		WIRE, Stop
356L	790552		WIRE, Stop
442	790282		SCREW -(Starter Strap)
474E	793118		ALTERNATOR -(3 Amp. DC)
493B	691177		BRACKET, Mounting
501	698315		REGULATOR
526	690297		SCREW -(Regulator)
578B	791956		WIRE ASSEMBLY
578C	794819		WIRE ASSEMBLY
697	795026		SCREW -(Starter Motor) (Drive Cap)
727	698039		COVER-STARTER DRIVE
732	699200		SCREW -(Starter Drive Cover)
735	795901		CORD, Starter
813	690635		CLAMP
851	493880S		TERMINAL, Spark Plug
892	791944		SWITCH, Key
892A	798182		SWITCH, Key
990	794696		KEY SET
990A	798177		SET, Key
1054	280275		TIE, Cable
1059	793567		KIT-SCREW/WASHER
1119	699772		SCREW -(Alternator)
1403	699481		SCREW -(Wire Assembly)

Not For Reproduction

Replacement Engine - US & Canada

REF NO	PART NO	QTY	DESCRIPTION
	15C1043022	1	Replacement Engine
	-----		Top No-Load Speed: 3600 -Trim: ALL
	-----		Service Note: For all Go-Karts use only a Model 136200 series engine as a replacement, regardless of the original Model.

Not For Reproduction

Copyright © Briggs & Stratton. All Rights reserved