Parts Manual

Mfg. No: 15A114-0122-E8

Copyright © Briggs & Stratton. All Rights reserved

22-Jun-2026

Model Components

Page

Blower Housing/Shrouds, Exhaust System, Flywheel. 4
Camshaft, Crankcase Cover, Crankshaft, Cylinder, Lubrication, Piston Group. 8
Carburetor, Fuel Supply. 12
Controls, Electric Starter, Governor Spring, Ignition, Rewind Starter. 16
Cylinder Head. 20
Replacement Engine - US & Canada. 24

Not For Reproduction

Copyright © Briggs & Stratton. All Rights reserved

Blower Housing/Shrouds, Exhaust System, Flywheel

Mfg. No: 15A114-0122-E8

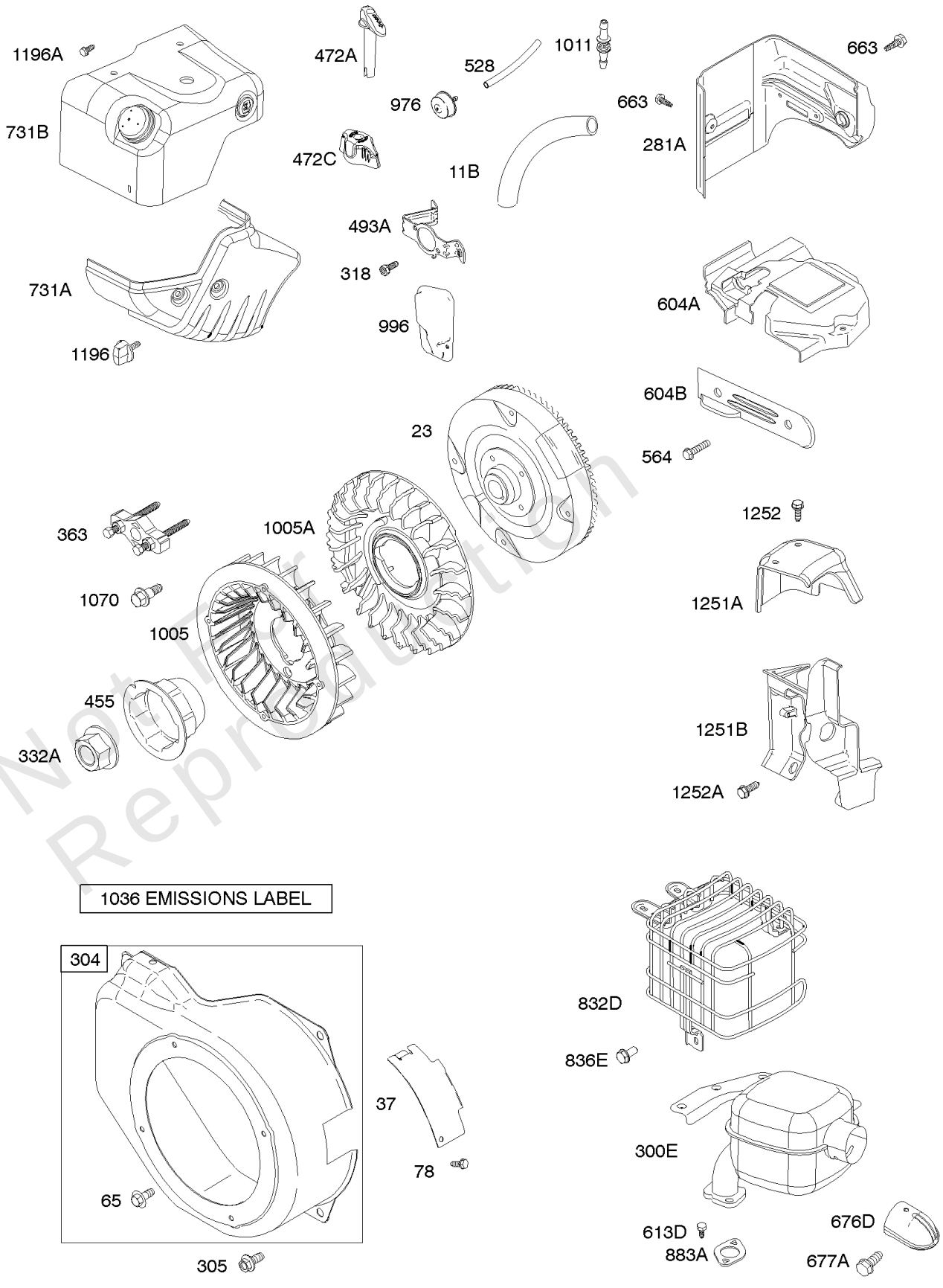

Not For Reproduction

Blower Housing/Shrouds, Exhaust System, Flywheel

REF NO	PART NO	QTY	DESCRIPTION
11B	695745		TUBE, Breather
23	699516		FLYWHEEL
37	699661		GUARD, Flywheel
65	699228		SCREW -(Rewind Starter)
78	699205		SCREW -(Flywheel Guard)
281A	793122		PANEL, Control
300E	791940		MUFFLER -Used After Code Date 05101800 -Used Before Code Date 08120100
300E	796422		MUFFLER -Used After Code Date 05113000
300E	790548		MUFFLER -Used Before Code Date 05101900
304	699598		HOUSING, Blower
305	699481		SCREW -(Blower Housing)
318	690370		SCREW -(Mounting Bracket) (SAE)
318	798649		SCREW -(Mounting Bracket) (Metric)
332A	792723		NUT -(Flywheel)
363	19203		PULLER, Flywheel
455	797431		CUP, Flywheel -Used After Code Date 10071900
455	692591		CUP, Flywheel -Used Before Code Date 10072000
472A	790553		KNOB-CHOKE SHAFT
472C	791948		KNOB, Choke Shaft
493A	695744		BRACKET, Mounting
528	793006		HOSE, Primer
564	699854		SCREW -(Control Cover)
604A	793134		COVER, Control
604B	790473		COVER, Control
613D	699209		SCREW -(Muffler)
663	699854		SCREW -(Control Panel)
676D	794213		DEFLECTOR, Muffler
677A	699776		SCREW -(Muffler Deflector)
731A	794589		HOOD, Snow
731B	793643		HOOD, Snow
832D	793193		MUFFLER
836E	699854		SCREW -(Muffler Guard)
883A	691893		GASKET-EXHAUST
976	790221		PRIMER, Carburetor -Used Before Code Date 06110600
976	793382		PRIMER, Carburetor -Used After Code Date 06110500
996	794687		SHIELD, Carburetor
1005	692592		FAN, Flywheel
1005A	794273		FAN, Flywheel

Not For Reproduction

Copyright © Briggs & Stratton. All Rights reserved

Blower Housing/Shrouds, Exhaust System, Flywheel

Mfg. No: 15A114-0122-E8

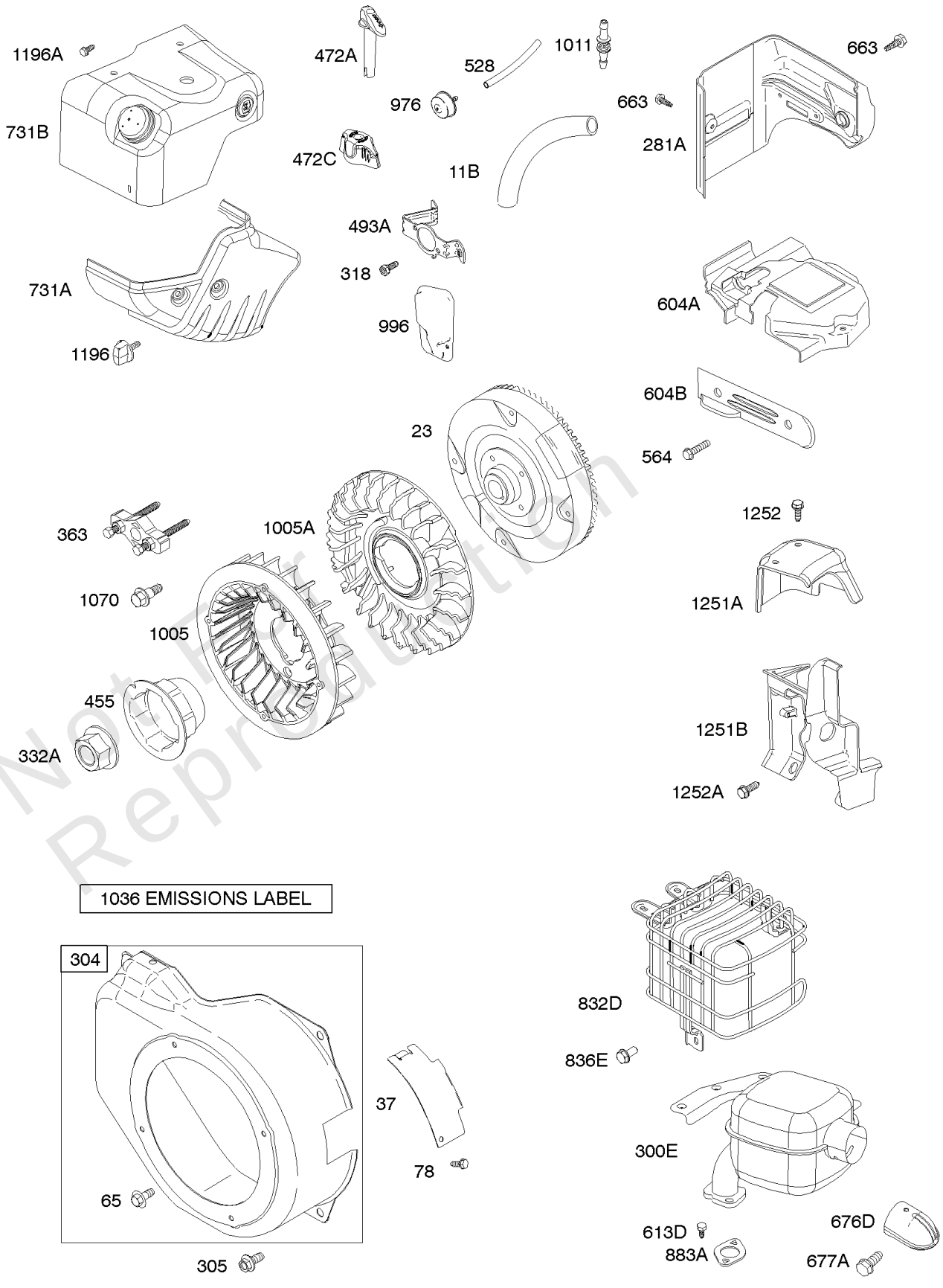

Not For Reproduction

Blower Housing/Shrouds, Exhaust System, Flywheel

REF NO	PART NO	QTY	DESCRIPTION
1011	794544		TUBE, Vent
1036	-----		Label-Emissions -(Available From A Briggs & Stratton Authorized Dealer)
1070	699201		SCREW -(Flywheel Fan)
1196	696692		SCREW -(Snow Hood)
1196A	699854		SCREW -(Snow Hood)
1251A	790555		SHIELD, Snow -Used Before Code Date 08120100
1251A	796421		SHIELD, Snow -Used After Code Date 08113000
1251B	790556		SHIELD, Snow
1252	699629		SCREW -(Snow Shield)
1252A	699491		SCREW -(Snow Shield)

Not For Reproduction

Copyright © Briggs & Stratton. All Rights reserved

Camshaft, Crankcase Cover, Crankshaft, Cylinder, Lubrication, Piston Group

Mfg. No: 15A114-0122-E8

1319 WARNING LABEL	1058 OPERATOR'S MANUAL	1330 REPAIR MANUAL	1019 LABEL KIT

***REQUIRED** when replacing parts with warning labels affixed.*

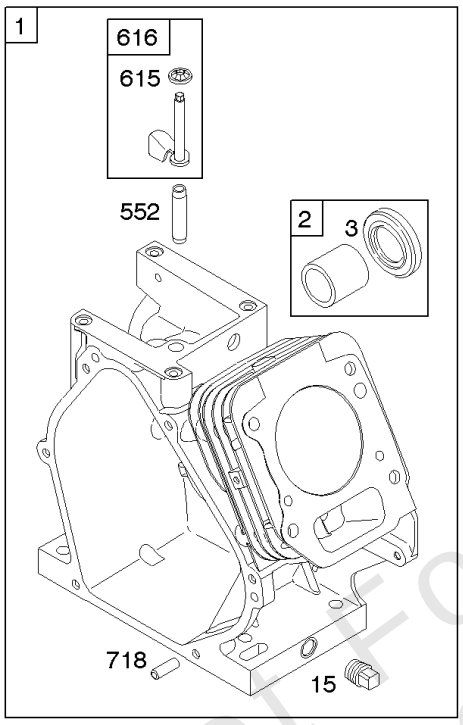

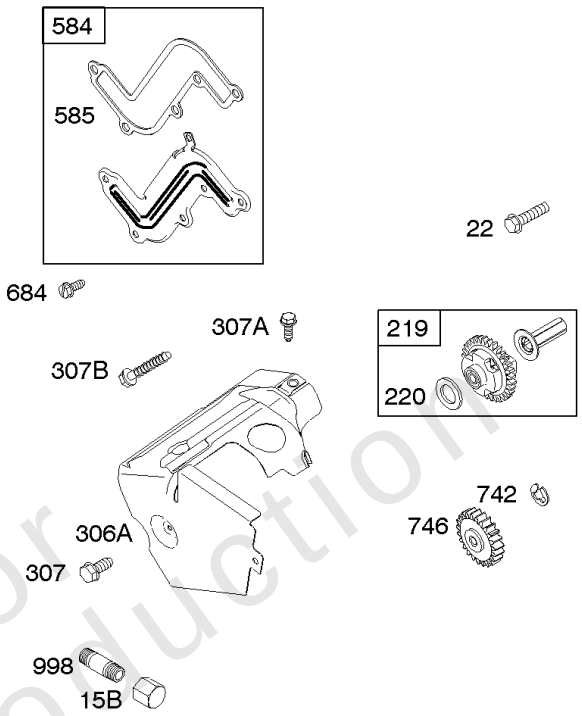

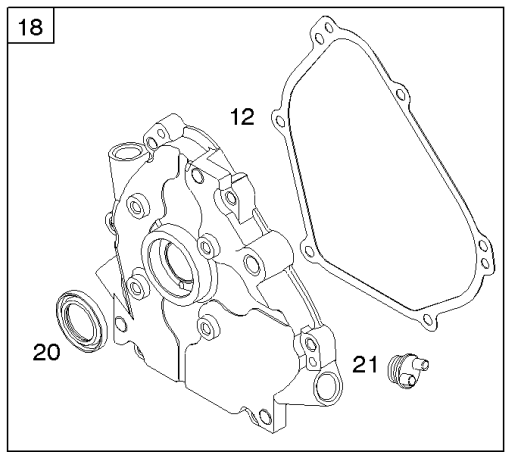

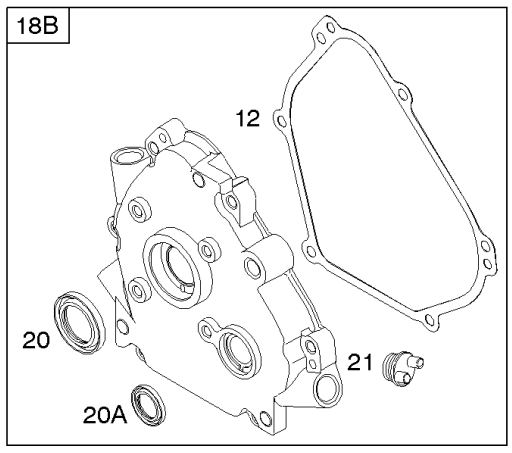

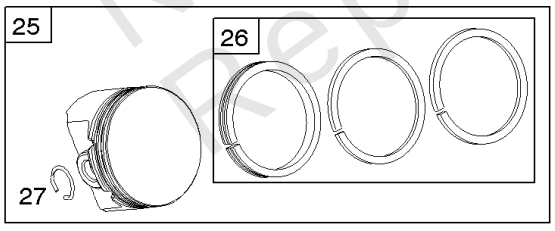

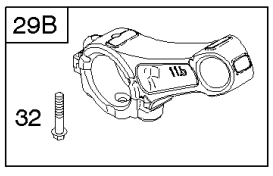

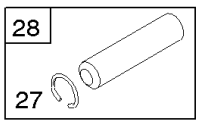

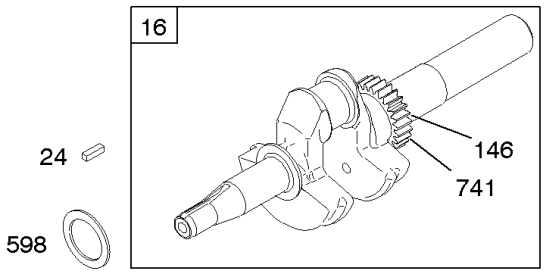

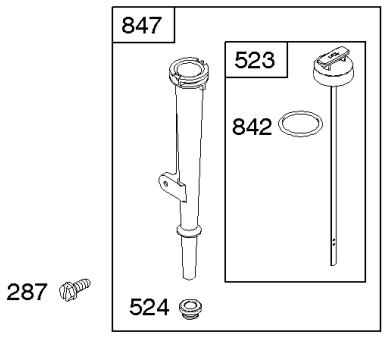

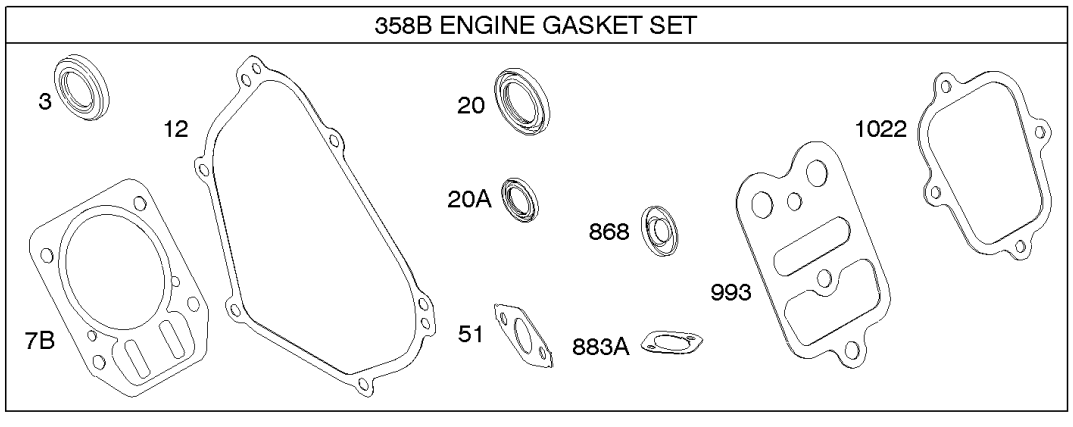

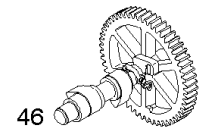

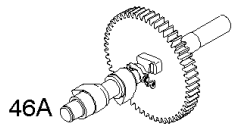

Not For Reproduction

REF NO	PART NO	QTY	DESCRIPTION
1	794188		CYLINDER ASSEMBLY
2	399269		KIT, Bushing/Seal -(Magneto Side)
3	299819S		SEAL, Oil -(Magneto Side)
7B	791716		GASKET, Cylinder Head
12	699485		GASKET, Crankcase
15	691686		PLUG-OIL DRAIN
15B	695757		PLUG, Oil Drain
16	699445		CRANKSHAFT
18	699804		COVER, Crankcase
18B	699677		COVER, Crankcase
20	692550		SEAL-OIL -(PTO Side)
20A	691952		SEAL, Oil -(PTO Side) (Auxiliary Drive)
21	281658S		CAP, Oil Fill
22	699478		SCREW -(Crankcase Cover/Sump)
24	796335		KEY, Flywheel
25	791786		PISTON ASSEMBLY -(Standard)
25	791791		PISTON ASSEMBLY -(.020 Oversize)
26	791787		SET, Ring -(Standard)
26	791792		SET, Ring -(.020 Oversize)
27	690975		LOCK, Piston Pin
28	690229		PIN, Piston -(Standard)
29B	791783		ROD, Connecting
32	791784		SCREW -(Connecting Rod)
46	693404		CAMSHAFT
46A	695285		CAMSHAFT
51	791718		GASKET, Intake
146	690979		KEY, Woodruff
219	693578		GEAR, Governor
220	691724		WASHER -(Governor Gear)
287	699629		SCREW -(Dipstick Tube)
306A	695710		SHIELD, Cylinder
307	699483		SCREW -(Cylinder Shield)
307A	699234		SCREW -(Cylinder Shield)
307B	790557		SCREW -(Cylinder Shield)
358B	791797		GASKET SET, Engine
523	790546		DIPSTICK -Used Before Code Date 10022200
523	798469		DIPSTICK -Used After Code Date 10022100
524	281370S		SEAL, Dipstick Tube -(Dipstick Tube)

Not For Reproduction

Copyright © Briggs & Stratton. All Rights reserved

Camshaft, Crankcase Cover, Crankshaft, Cylinder, Lubrication, Piston Group

Mfg. No: 15A114-0122-E8

1319 WARNING LABEL	1058 OPERATOR'S MANUAL	1330 REPAIR MANUAL	1019 LABEL KIT

***REQUIRED** when replacing parts with warning labels affixed.*

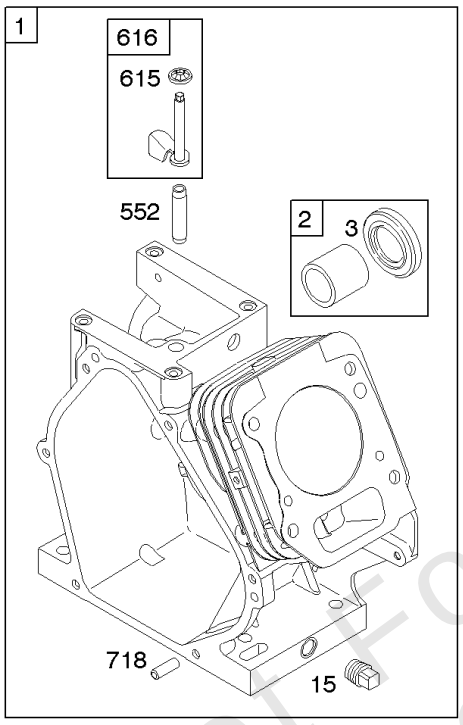

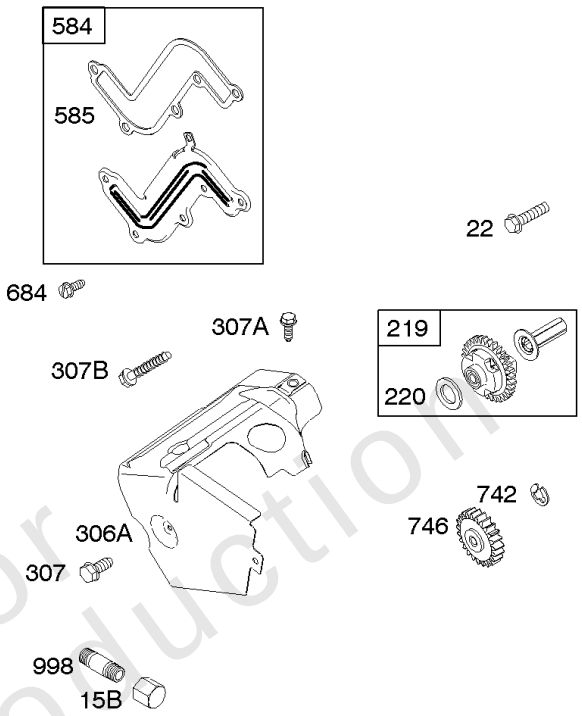

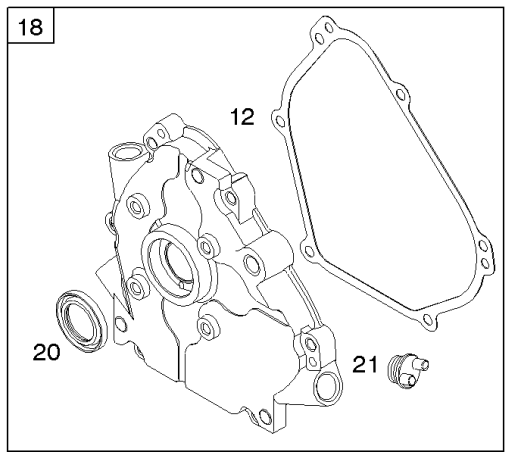

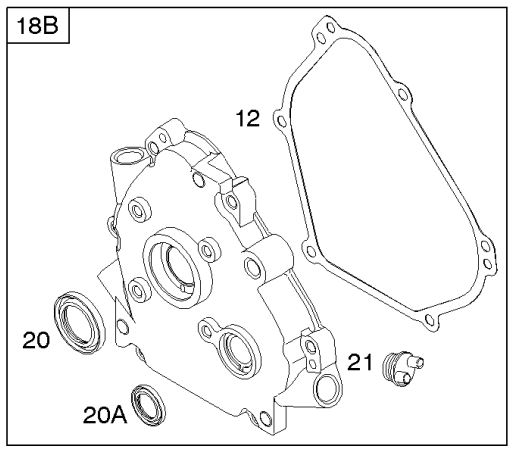

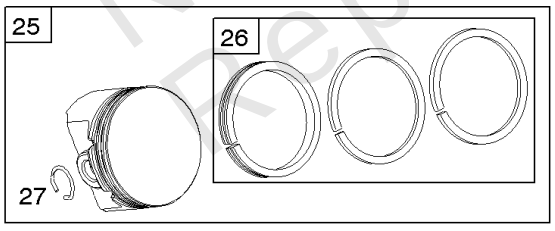

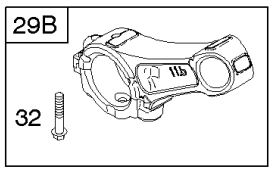

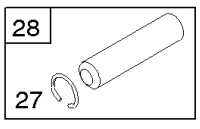

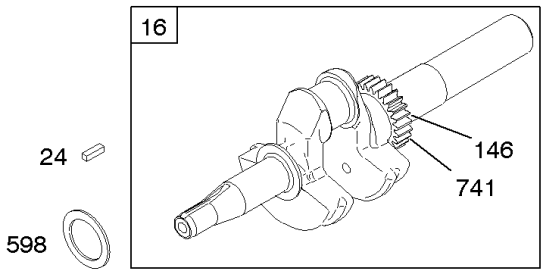

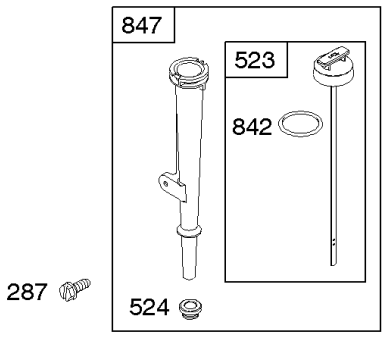

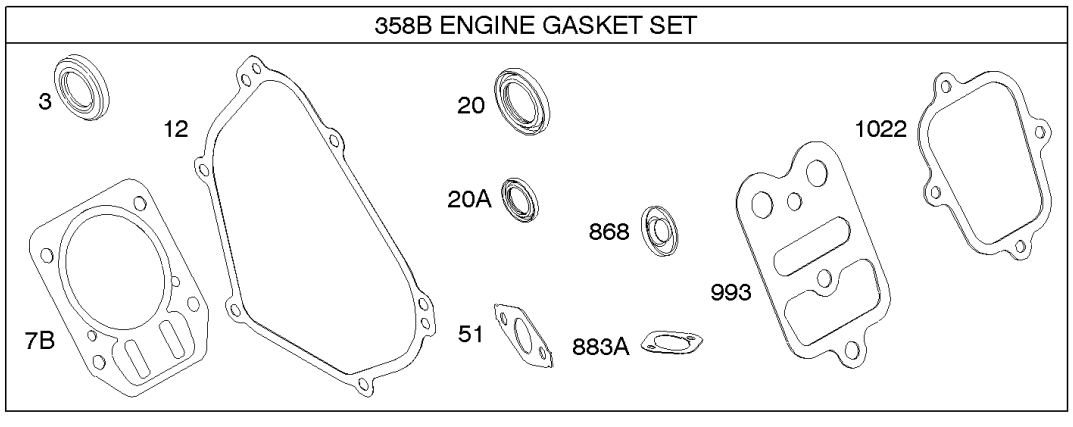

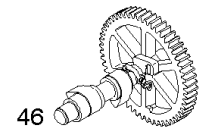

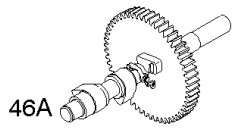

Not For Reproduction

REF NO	PART NO	QTY	DESCRIPTION
552	692346		BUSHING, Governor Crank
584	791759		COVER, Breather Passage
585	791760		GASKET, Breather Passage
598	220624		SHIM, End Play -(Crankshaft or Camshaft Bearing)
615	692576		RETAINER, Governor Shaft
616	692547		CRANK, Governor
684	791761		SCREW -(Breather Passage Cover)
718	690959		PIN, Locating
741	695087		GEAR, Timing
742	692564		RETAINER, E Ring
746	790278		GEAR-IDLER
842	691031		SEAL, O-Ring -(Dipstick Tube)
847	798468		DIPSTICK/TUBE ASSEMBLY -Used After Code Date 10022100
847	790545		DIPSTICK/TUBE ASSEMBLY -Used Before Code Date 10022200
868	692044		SEAL, Valve
883A	691893		GASKET-EXHAUST
993	694088		GASKET, Cylinder Head Plate
998	794701		PIPE, Oil -(5)
998	792928		PIPE, Oil -(2 1/2)
998	696683		PIPE, Oil -(4)
1019	791811		KIT, Label
1022	691890		GASKET-ROCKER COVER
1058	279128TRI		MANUAL, Operator's
1319	794467		LABEL, Warning
1330	272147		MANUAL, Repair

Not For Reproduction

Copyright © Briggs & Stratton. All Rights reserved

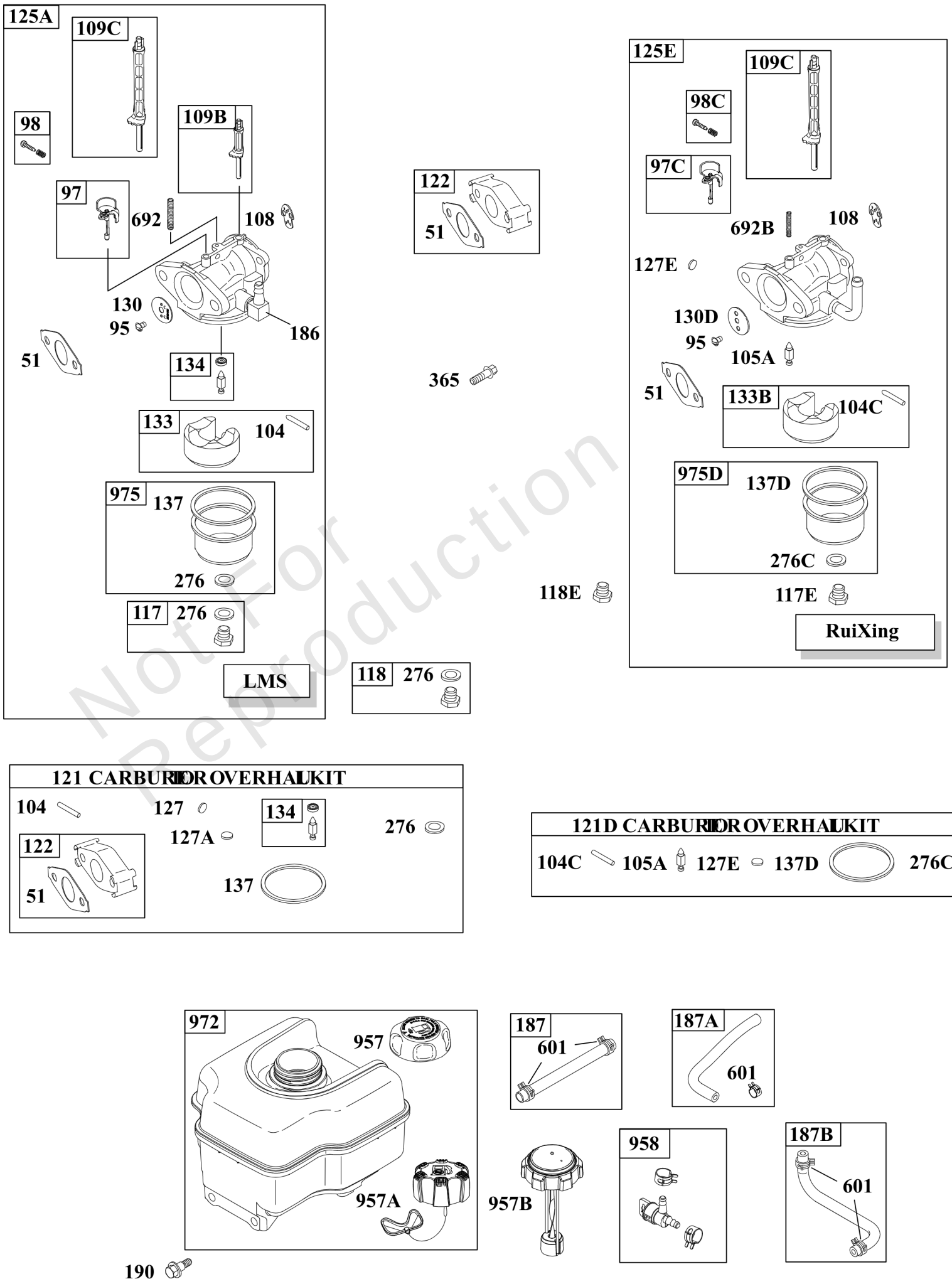

Not For Reproduction

Carburetor, Fuel Supply

REF NO	PART NO	QTY	DESCRIPTION
51	791718		GASKET, Intake
95	691636		SCREW -(Throttle Valve)
97	690024		SHAFT, Throttle
97C	797628		SHAFT, Throttle
98	398185		KIT-IDLE SPEED -(Idle Speed) (Lmt 26, 27, 28, 31)
98C	797156		KIT, Idle Speed
104	691242		PIN, Float Hinge
104C	797622		PIN, Float Hinge
105A	797139		VALVE, Float Needle
108	695807		VALVE, Choke
109B	695729		SHAFT, Choke
109C	791954		SHAFT, Choke
117	694176		JET, Main -(Standard)
117E	798930		JET, Main -(Standard) -Used Before Code Date 11080800
117E	590906		JET, Main -(Standard) -Used After Code Date 11080700
118	695042		JET, Main -(High Altitude)
118E	798661		JET, Main -(High Altitude) -Used Before Code Date 11080800
118E	590440		JET, Main -(High Altitude) -Used After Code Date 11080700
121	792006		KIT, Carburetor Overhaul
121D	797634		KIT, Carburetor Overhaul
122	791717		SPACER, Carburetor
125A	794588		CARBURETOR -Used Before Code Date 10071000
125E	590907		CARBURETOR -Used After Code Date 11080700
125E	798918		CARBURETOR -Used After Code Date 10070900 -Used Before Code Date 11080800
127	694468		PLUG, Welch -(Bowl Vent)
127A	691739		PLUG-WELCH
127E	797633		PLUG, Welch
130	691181		VALVE-THROTTLE
130D	797630		VALVE, Throttle
133	398187		FLOAT-CARBURETOR
133B	797136		FLOAT, Carburetor
134	398188		KIT-NEEDLE/SEAT
137	693981		GASKET-FLOAT BOWL
137D	798932		GASKET, Float Bowl
186	692317		CONNECTOR-HOSE
187	791766		LINE, Fuel -(Cut To Required Length)
187A	798908		LINE, Fuel -(Molded) -Used After Code Date 10070900

Not For Reproduction

Copyright © Briggs & Stratton. All Rights reserved

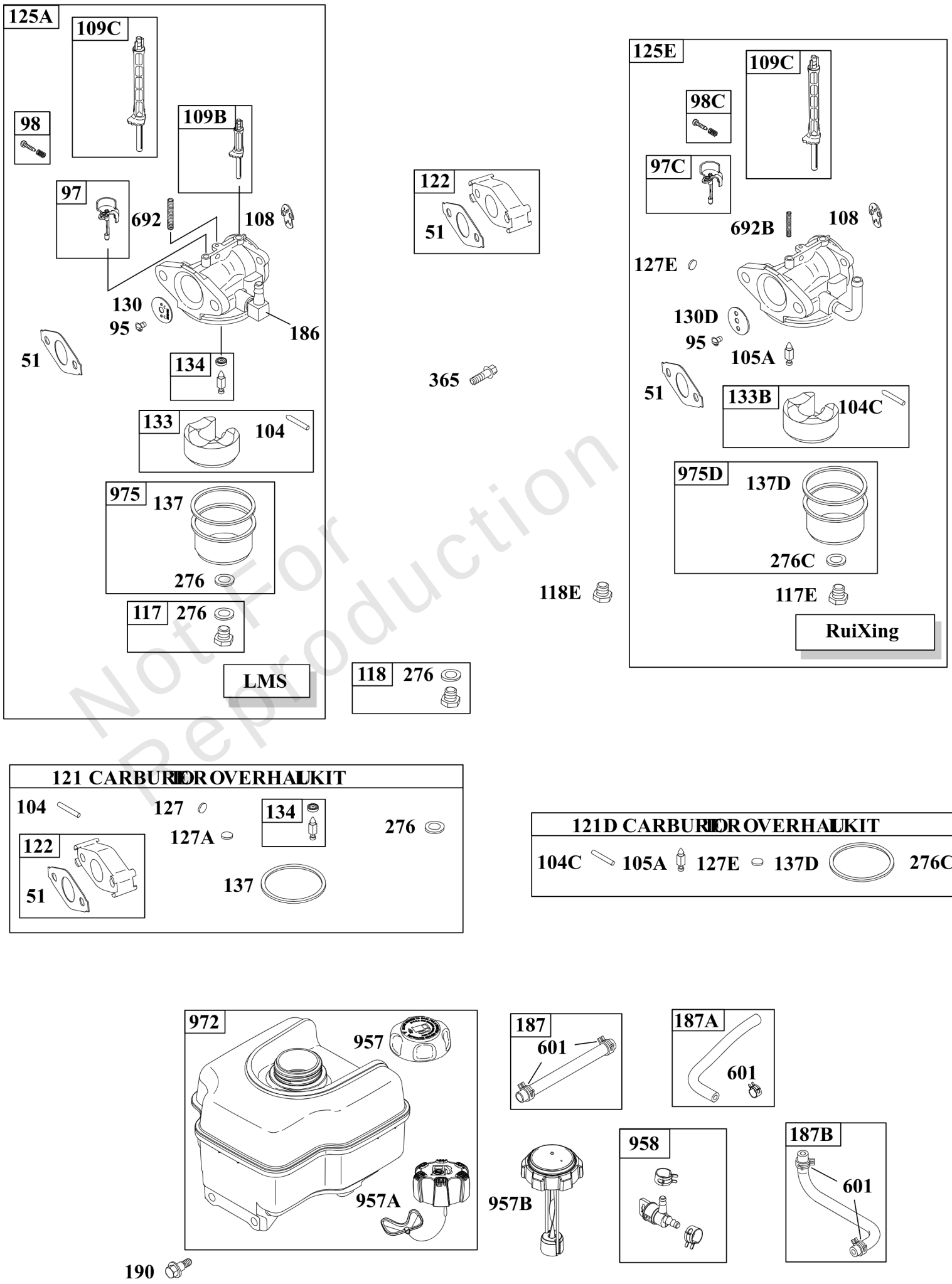

Not For Reproduction

Carburetor, Fuel Supply

REF NO	PART NO	QTY	DESCRIPTION
187A	791867		LINE, Fuel -(Molded) -Used Before Code Date 10071000
187B	791874		LINE, Fuel -(Molded) -Used Before Code Date 10071000
187B	798907		LINE, Fuel -(Molded) -Used After Code Date 10070900
190	699220		SCREW -(Fuel Tank)
276	271716		WASHER-SEALING
276C	797632		WASHER, Sealing
365	699484		SCREW -(Carburetor)
601	791850		CLAMP, Hose
692	690572		SPRING, Detent
692B	797624		SPRING, Detent
957	792647		CAP, Fuel Tank -(Plastic) (Fresh Start)
957	795027		CAP, Fuel Tank -(Plastic) (Text Free)
957A	799719		CAP, Fuel Tank -(Plastic) (Carbon In Cap)
957B	698109		CAP, Fuel Tank -(Plastic)
958	698180		VALVE, Fuel Shutoff -(Plastic)
972	694260		TANK, Fuel -(Plastic)
975	493640		BOWL, Float
975D	798931		BOWL, Float

Not For Reproduction

Mfg. No: 15A114-0122-E8

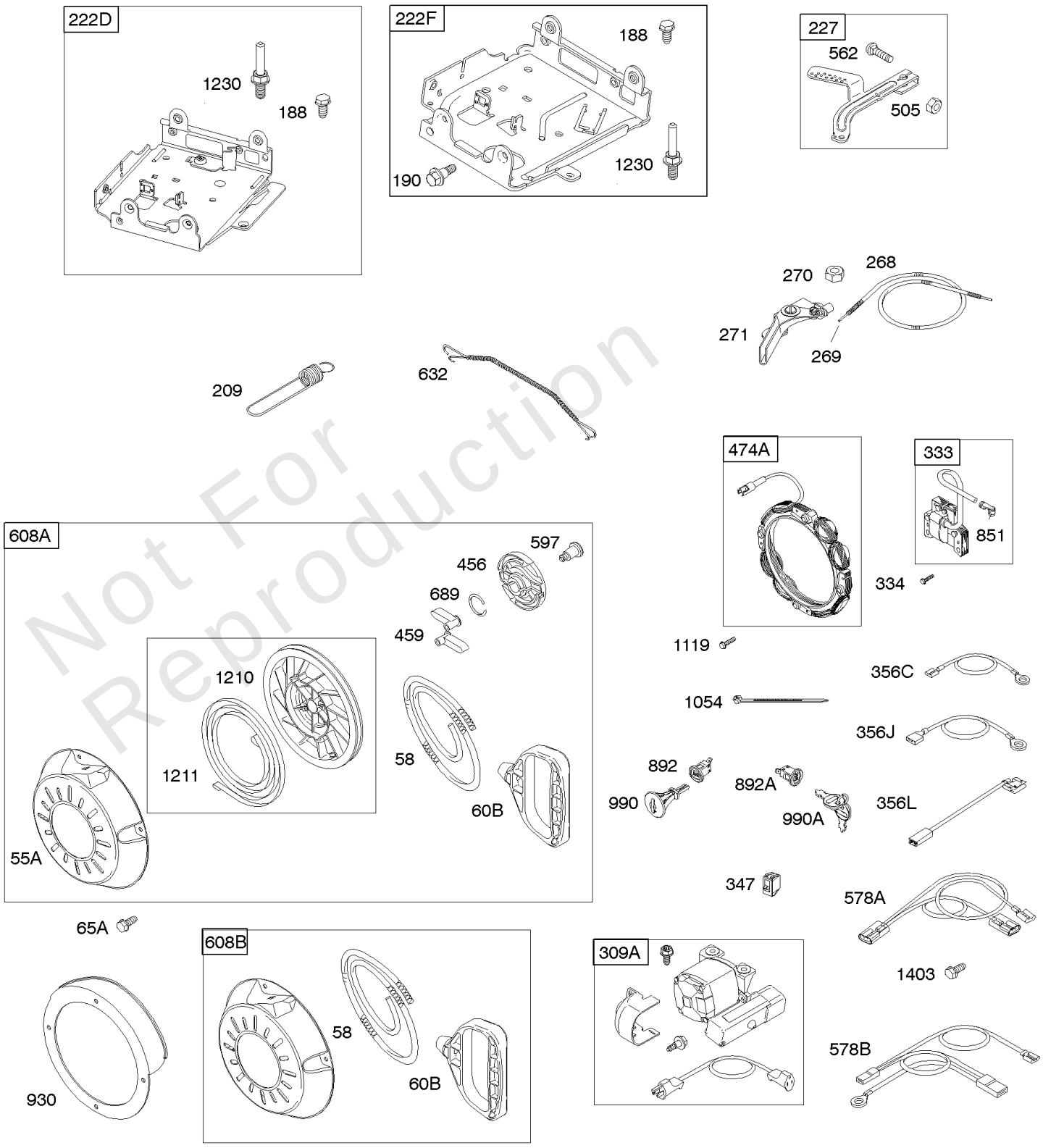

Not For Reproduction

Controls, Electric Starter, Governor Spring, Ignition, Rewind Starter

REF NO	PART NO	QTY	DESCRIPTION
55A	696710		HOUSING, Rewind Starter
58	693389		ROPE, Starter -(Cut To Required Length)
60B	699334		GRIP, Starter Rope
65A	699851		SCREW -(Rewind Starter)
188	699479		SCREW -(Control Bracket)
190	699220		SCREW -(Fuel Tank)
209	692571		SPRING, Governor -Used Before Code Date 10071000
209	693206		SPRING, Governor -Used After Code Date 10070900
222D	790549		BRACKET, Control -Used Before Code Date 06051500
222F	793100		BRACKET, Control -Used After Code Date 06051400
227	692573		LEVER, Governor Control
268	691025		CASING, Control Wire -(Cut To Required Length)
269	691026		WIRE, Control -(Cut To Required Length)
270	691027		NUT -(Control Wire Casing) (Control Wire Casing)
271	691028		LEVER, Control
309A	699786		MOTOR, Starter
333	695711		ARMATURE, Magneto
334	699477		SCREW -(Magneto Armature)
347	698338		SWITCH, Rocker
356C	695630		WIRE, Stop
356L	790552		WIRE, Stop
356J	692603		WIRE, Stop
456	692299		PLATE-PAWL FRICTION
459	281505S		PAWL-RATCHET
474A	791743		ALTERNATOR
505	691251		NUT -(Governor Control Lever)
562	691119		BOLT -(Governor Control Lever)
578A	790481		WIRE ASSEMBLY
578B	791956		WIRE ASSEMBLY
597	691696		SCREW -(Pawl Friction Plate)
608A	699335		STARTER-REWIND -Used Before Code Date 10072000
608B	797430		STARTER, Rewind -Used After Code Date 10071900
632	692653		SPRING/LINK, Mechanical Governor
689	691855		SPRING-FRICTION
851	493880S		TERMINAL, Spark Plug
892	791944		SWITCH, Key
892A	798182		SWITCH, Key
930	696709		GUARD, Rewind
990	695756		SET, Key

Not For Reproduction

Copyright © Briggs & Stratton. All Rights reserved

Mfg. No: 15A114-0122-E8

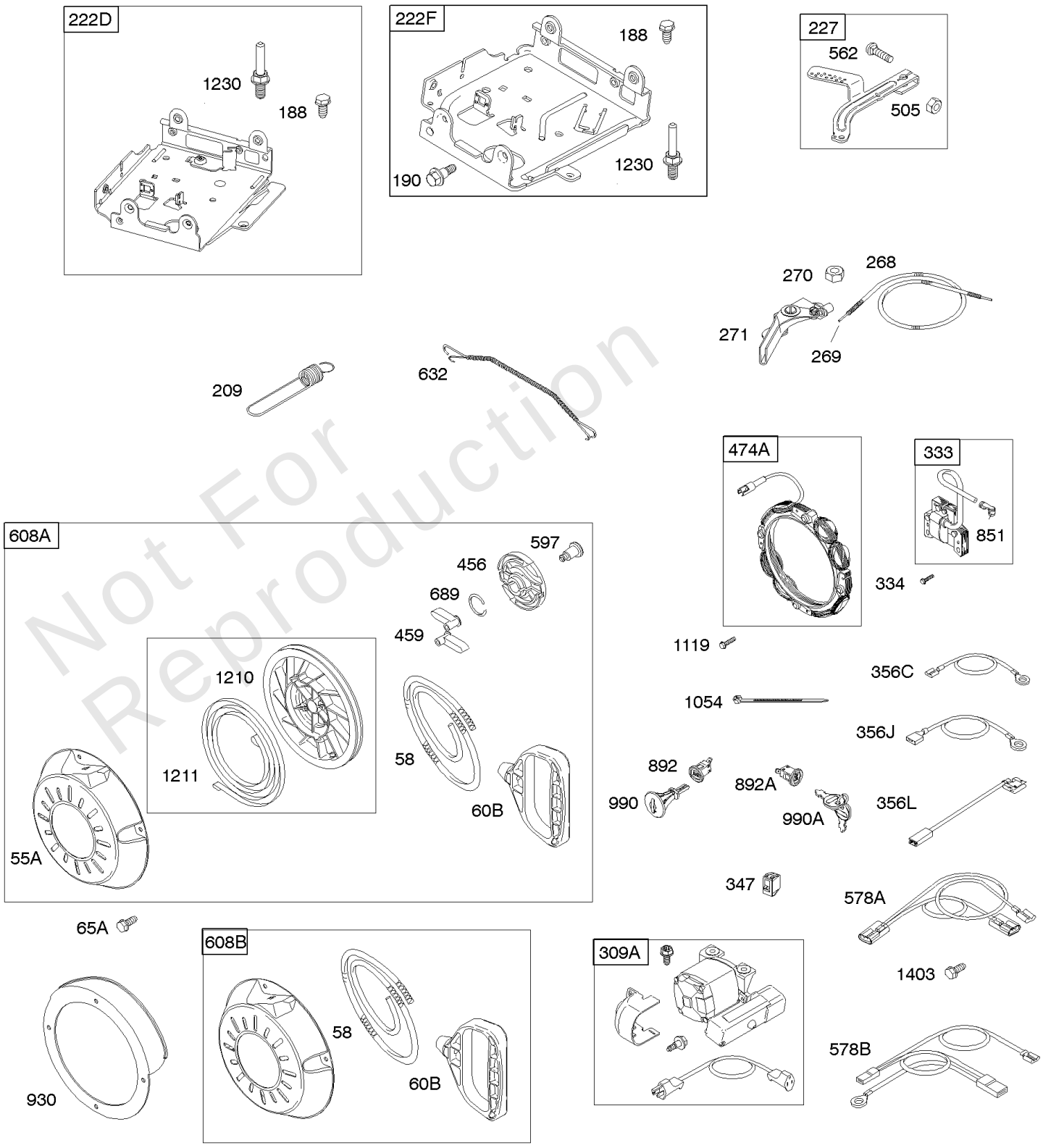

Not For Reproduction

Controls, Electric Starter, Governor Spring, Ignition, Rewind Starter

REF NO	PART NO	QTY	DESCRIPTION
990A	798177		SET, Key
1054	280275		TIE, Cable
1119	699772		SCREW -(Alternator)
1210	498144		PULLEY/SPRING ASSY -(Pulley)
1211	498144		PULLEY/SPRING ASSY -(Spring)
1230	699847		STUD -(Control Bracket)
1403	699481		SCREW -(Wire Assembly)

Not For Reproduction

Copyright © Briggs & Stratton. All Rights reserved

Cylinder Head

Mfg. No: 15A114-0122-E8

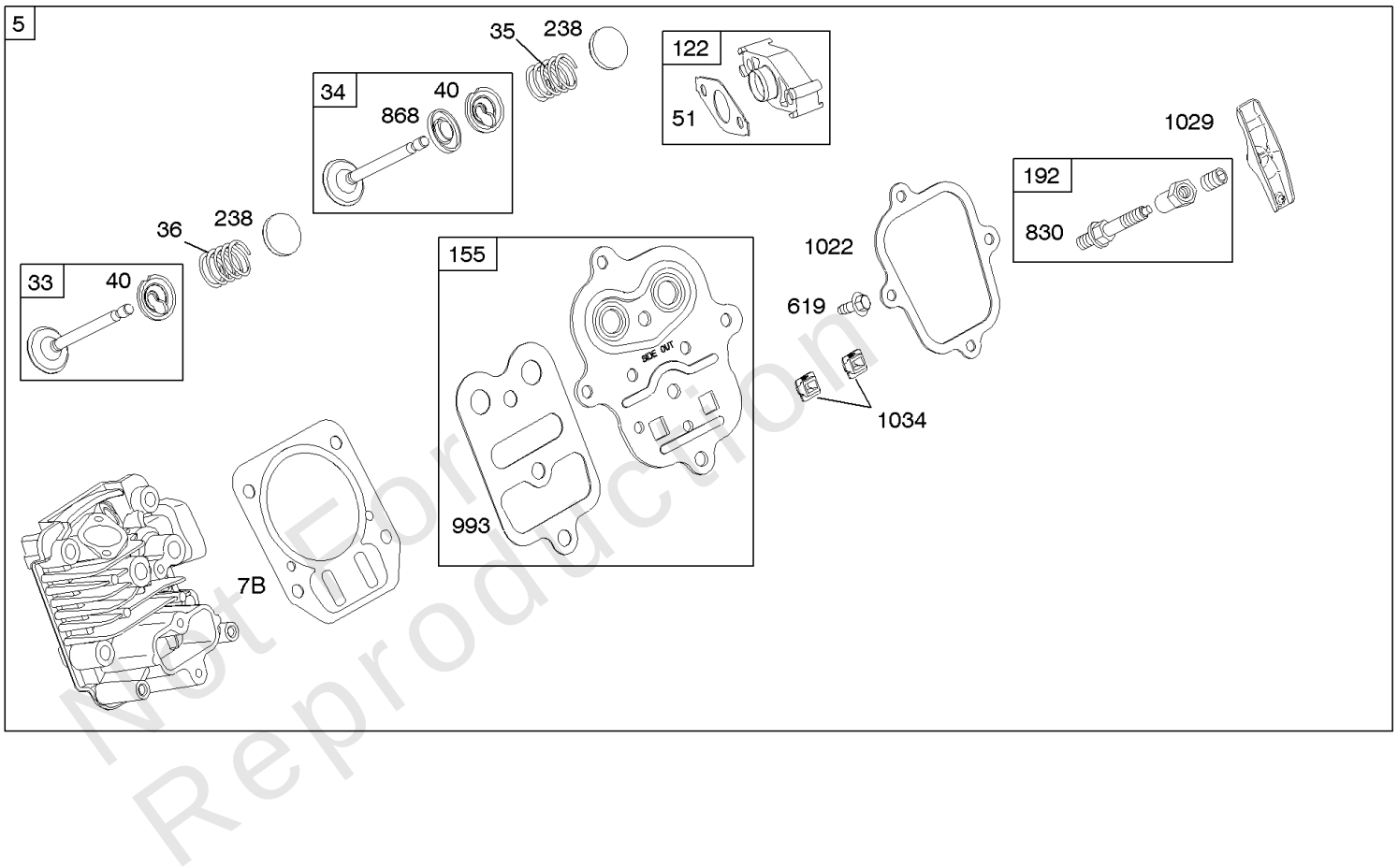

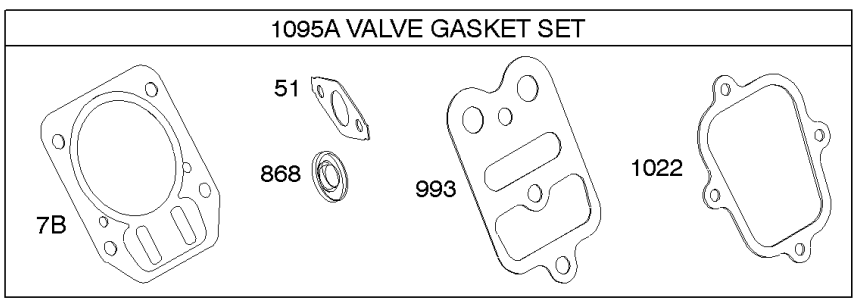

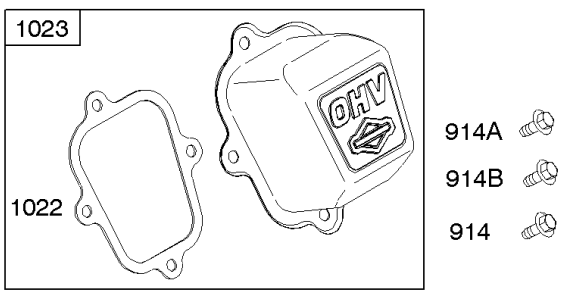

Not For Reproduction

Cylinder Head

REF NO	PART NO	QTY	DESCRIPTION
5	791720		HEAD, Cylinder
7B	791716		GASKET, Cylinder Head
13	699482		SCREW -(Cylinder Head)
33	499642		VALVE, Exhaust
34	499641		VALVE, Intake
35	691304		SPRING, Valve -(Intake)
36	691304		SPRING, Valve -(Exhaust)
40	692194		RETAINER, Valve
45	690977		TAPPET, Valve
51	791718		GASKET, Intake
122	791717		SPACER, Carburetor
155	698214		PLATE, Cylinder Head -(SAE) -Used Before Code Date 09061800
155	797442		PLATE, Cylinder Head -(Metric) -Used After Code Date 09061700
192	797440		ADJUSTER. Rocker Arm -(Metric) -Used After Code Date 09061700
192	694543		ADJUSTER-ROCKER ARM -(SAE) -Used Before Code Date 09061800
238	691300		CAP, Valve
337	691043		PLUG, Spark -(EMS)
337	491055S		PLUG, Spark -(Resistor)
337	84007216		PLUG, SPARK -(China Only)
383	19374S		WRENCH, Spark Plug
619	699481		SCREW -(Cylinder Head Plate)
635A	692927		BOOT, Spark Plug
830	797441		STUD, Rocker Arm -(Rocker Arm) (Metric) -Used After Code Date 09061700
830	694544		STUD-ROCKER ARM -(Rocker Arm) (SAE) -Used Before Code Date 09061800
868	692044		SEAL, Valve
914	699481		SCREW -(Rocker Cover) (Bottom)
914A	692557		SCREW -(Rocker Cover) (Top) -Used Before Code Date 09061800
914A	797444		SCREW -(Rocker Cover) (Top) -Used After Code Date 09061700
914B	697551		SCREW -(Rocker Cover) (Center) -Used Before Code Date 09061800
914B	797444S		SCREW -(Rocker Cover) (Center) -Used After Code Date 09061700
993	694088		GASKET, Cylinder Head Plate

Not For Reproduction

Copyright © Briggs & Stratton. All Rights reserved

Cylinder Head

Mfg. No: 15A114-0122-E8

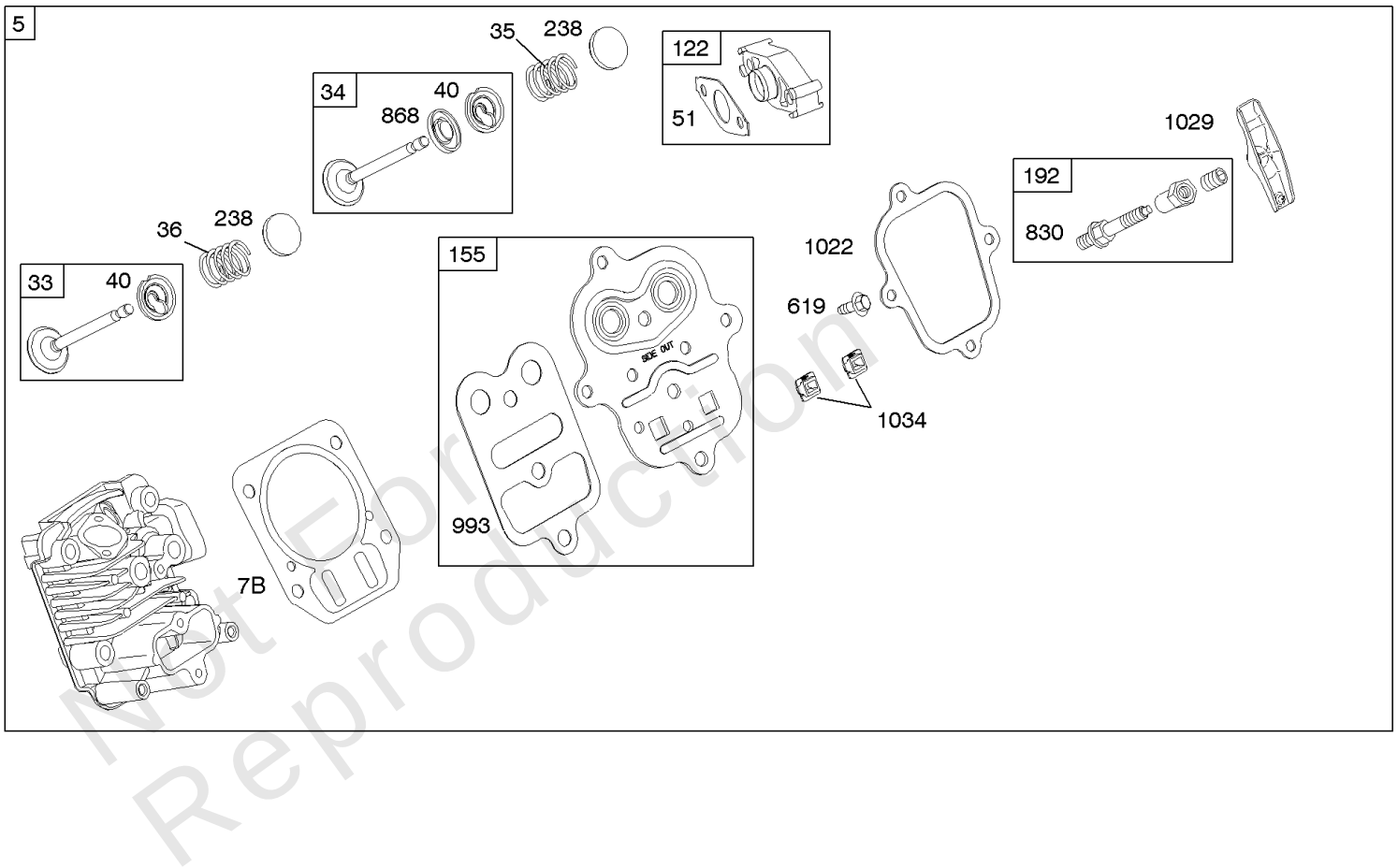

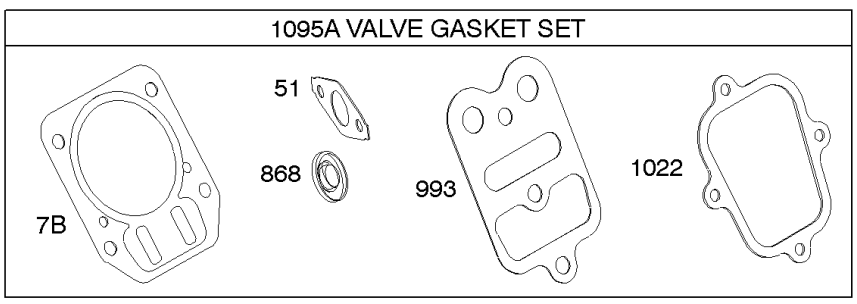

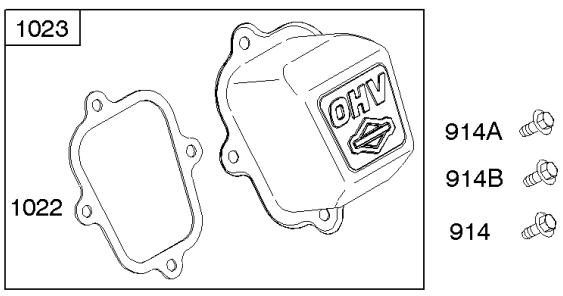

Not For Reproduction

Cylinder Head

REF NO	PART NO	QTY	DESCRIPTION
1022	691890		GASKET-ROCKER COVER
1023	499924		COVER, Rocker
1026	790287		ROD, Push
1029	691230		ARM, Rocker -(SAE) -Used Before Code Date 09061800
1029	797443		ARM, Rocker -(Metric) -Used After Code Date 09061700
1034	691343		GUIDE, Push Rod
1095A	791798		GASKET SET, Valve

Not For Reproduction

Copyright © Briggs & Stratton. All Rights reserved

Replacement Engine - US & Canada

REF NO	PART NO	QTY	DESCRIPTION
	15C1140417	1	Replacement Engine
	795433	1	Replacement Short Block
	-----		Top No-Load Speed: 3600 -Trim: ALL
	-----		Service Note: For all Go-Karts use only a Model 136200 series engine as a replacement, regardless of the original Model.
	-----		Service Note: Transfer Muffler and/or Spark Arrester Assembly from the original engine if suitable for additional service or add new parts as required

Not For Reproduction

Copyright © Briggs & Stratton. All Rights reserved