# Parts Manual

Mfg. No: 15A114-0117-E1

Copyright © Briggs & Stratton. All Rights reserved

22-Jun-2026

## Model Components

**Page**

Blower Housing/Shrouds, Exhaust System, Flywheel. . . . . 4
Camshaft, Crankcase Cover, Crankshaft, Cylinder, Lubrication, Piston Group. . . . . 8
Carburetor, Fuel Supply. . . . . 12
Controls, Electric Starter, Governor Spring, Ignition, Rewind Starter. . . . . 16
Cylinder Head. . . . . 20
Replacement Engine - US & Canada. . . . . 24

Not For Reproduction

Copyright © Briggs & Stratton. All Rights reserved

# Blower Housing/Shrouds, Exhaust System, Flywheel

Mfg. No: 15A114-0117-E1

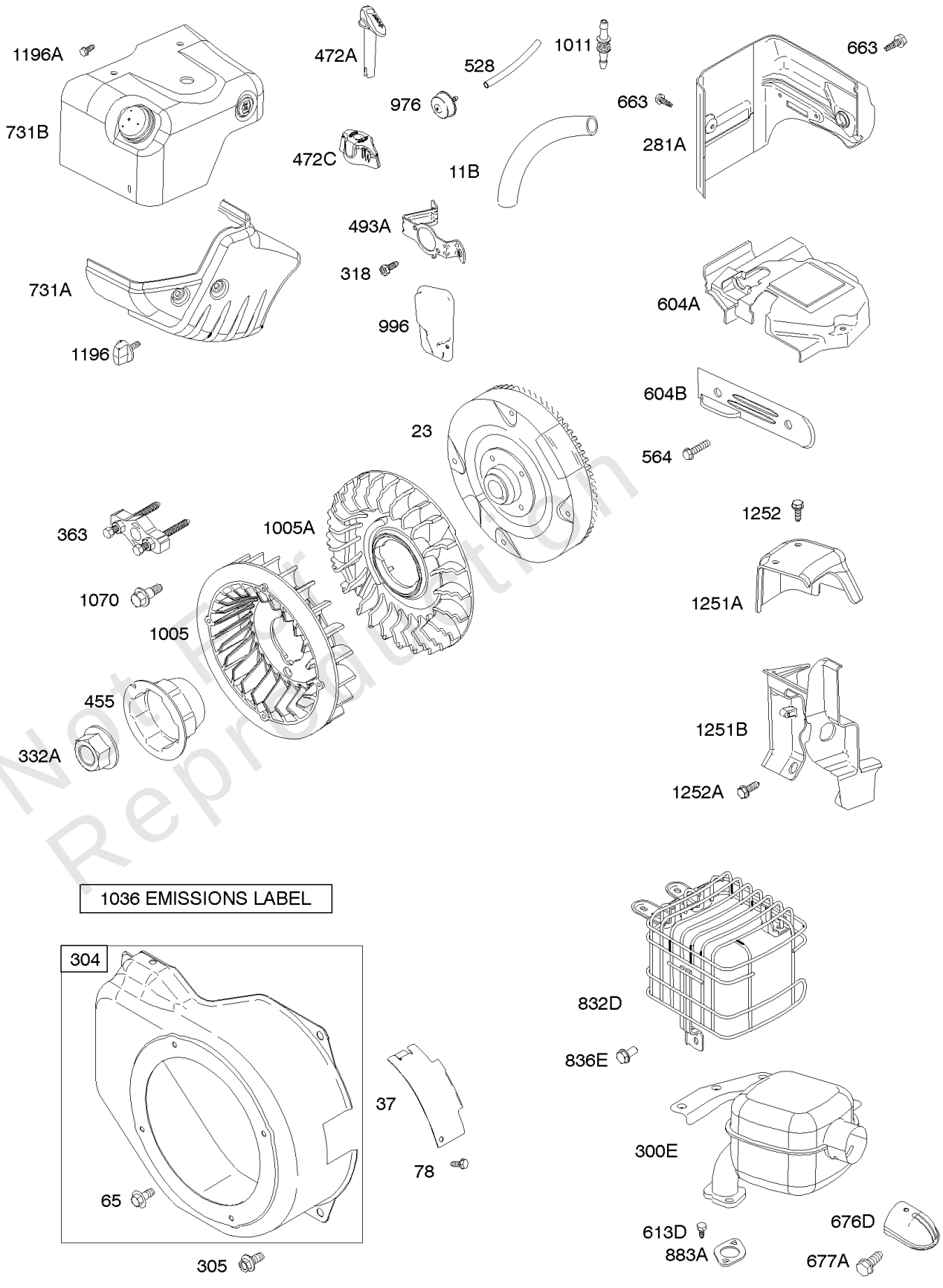


Not For Reproduction

## *Blower Housing/Shrouds, Exhaust System, Flywheel*

| REF NO | PART NO | QTY | DESCRIPTION |
|---|---|---|---|
| 11B | 695745 | | TUBE, Breather |
| 23 | 699516 | | FLYWHEEL |
| 37 | 699661 | | GUARD, Flywheel |
| 65 | 699228 | | SCREW<br>-(Rewind Starter) |
| 78 | 699205 | | SCREW<br>-(Flywheel Guard) |
| 281A | 793122 | | PANEL, Control |
| 300E | 791940 | | MUFFLER<br>-Used After Code Date 05101800<br>-Used Before Code Date 08120100 |
| 300E | 796422 | | MUFFLER<br>-Used After Code Date 05113000 |
| 300E | 790548 | | MUFFLER<br>-Used Before Code Date 05101900 |
| 304 | 699598 | | HOUSING, Blower |
| 305 | 699481 | | SCREW<br>-(Blower Housing) |
| 318 | 690370 | | SCREW<br>-(Mounting Bracket) (SAE) |
| 318 | 798649 | | SCREW<br>-(Mounting Bracket) (Metric) |
| 332A | 792723 | | NUT<br>-(Flywheel) |
| 363 | 19203 | | PULLER, Flywheel |
| 455 | 797431 | | CUP, Flywheel<br>-Used After Code Date 10071900 |
| 455 | 692591 | | CUP, Flywheel<br>-Used Before Code Date 10072000 |
| 472A | 790553 | | KNOB-CHOKE SHAFT |
| 472C | 791948 | | KNOB, Choke Shaft |
| 493A | 695744 | | BRACKET, Mounting |
| 528 | 793006 | | HOSE, Primer |
| 564 | 699854 | | SCREW<br>-(Control Cover) |
| 604A | 793134 | | COVER, Control |
| 604B | 790473 | | COVER, Control |
| 613D | 699209 | | SCREW<br>-(Muffler) |
| 663 | 699854 | | SCREW<br>-(Control Panel) |
| 676D | 794213 | | DEFLECTOR, Muffler |
| 677A | 699776 | | SCREW<br>-(Muffler Deflector) |
| 731A | 794589 | | HOOD, Snow |
| 731B | 793643 | | HOOD, Snow |
| 832D | 793193 | | MUFFLER |
| 836E | 699854 | | SCREW<br>-(Muffler Guard) |
| 883A | 691893 | | GASKET-EXHAUST |
| 976 | 790221 | | PRIMER, Carburetor<br>-Used Before Code Date 06110600 |
| 976 | 793382 | | PRIMER, Carburetor<br>-Used After Code Date 06110500 |
| 996 | 794687 | | SHIELD, Carburetor |
| 1005 | 692592 | | FAN, Flywheel |
| 1005A | 794273 | | FAN, Flywheel |

Not For Reproduction

Copyright © Briggs & Stratton. All Rights reserved

# Blower Housing/Shrouds, Exhaust System, Flywheel

Mfg. No: 15A114-0117-E1

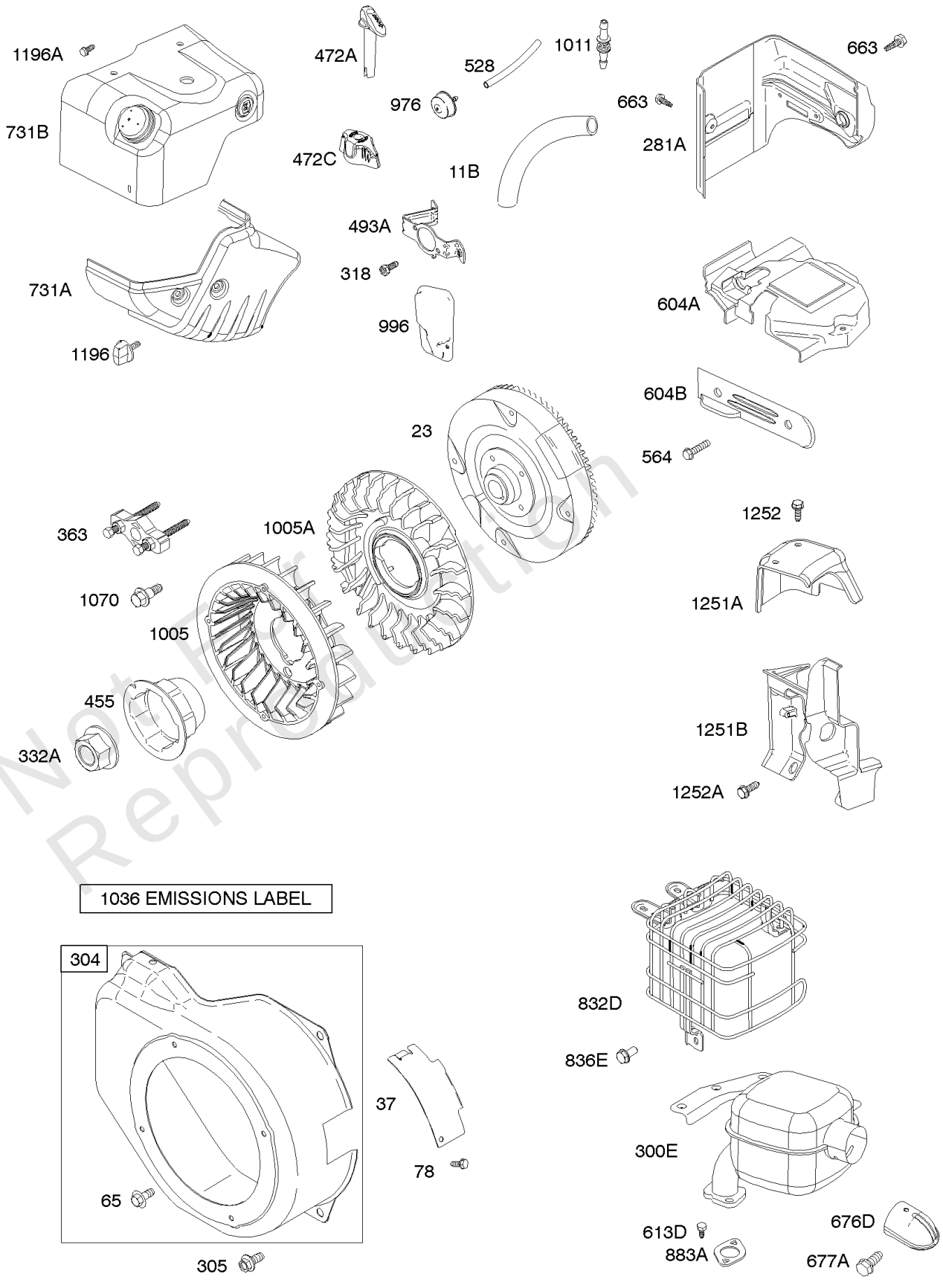


Not For Reproduction

## *Blower Housing/Shrouds, Exhaust System, Flywheel*

| REF NO | PART NO | QTY | DESCRIPTION |
|---|---|---|---|
| 1011 | 794544 | | TUBE, Vent |
| 1036 | ----- | | Label-Emissions<br>-(Available From A Briggs & Stratton Authorized Dealer) |
| 1070 | 699201 | | SCREW<br>-(Flywheel Fan) |
| 1196 | 696692 | | SCREW<br>-(Snow Hood) |
| 1196A | 699854 | | SCREW<br>-(Snow Hood) |
| 1251A | 790555 | | SHIELD, Snow<br>-Used Before Code Date 08120100 |
| 1251A | 796421 | | SHIELD, Snow<br>-Used After Code Date 08113000 |
| 1251B | 790556 | | SHIELD, Snow |
| 1252 | 699629 | | SCREW<br>-(Snow Shield) |
| 1252A | 699491 | | SCREW<br>-(Snow Shield) |

Not For Reproduction

Copyright © Briggs & Stratton. All Rights reserved

# Camshaft, Crankcase Cover, Crankshaft, Cylinder, Lubrication, Piston Group

Mfg. No: 15A114-0117-E1

| 1319 WARNING LABEL | 1058 OPERATOR'S MANUAL | 1330 REPAIR MANUAL | 1019 LABEL KIT |
|---|---|---|---|

***REQUIRED** when replacing parts with warning labels affixed.*

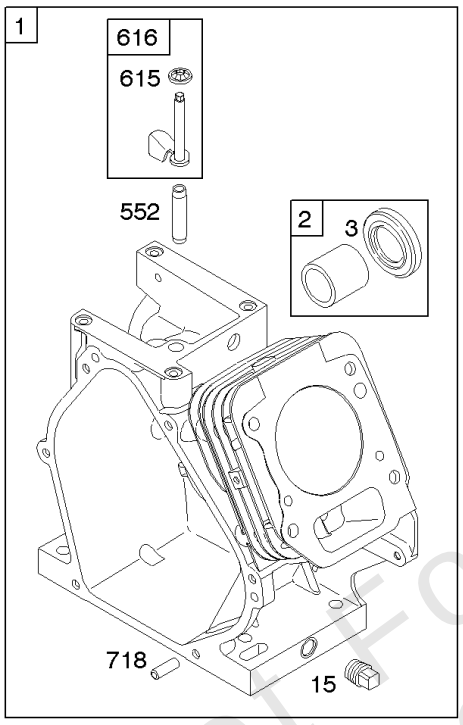


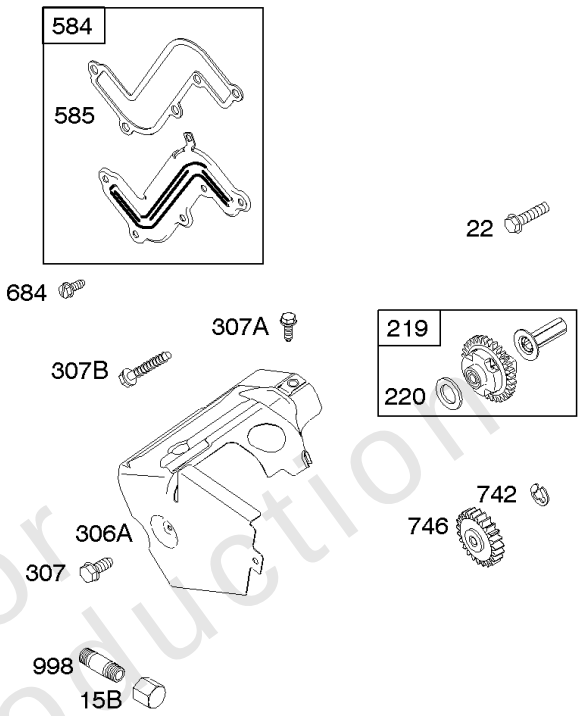


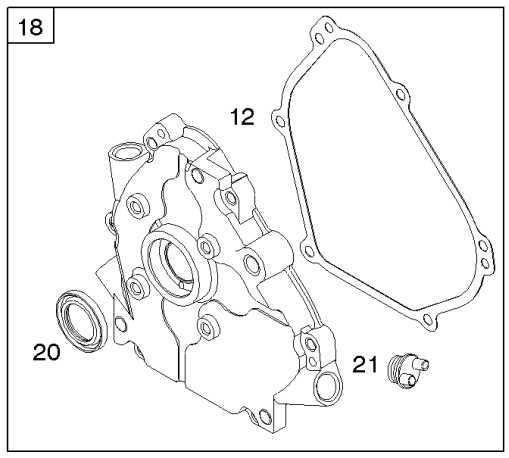


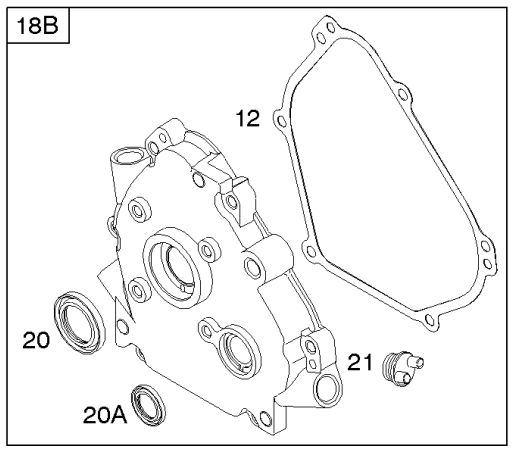


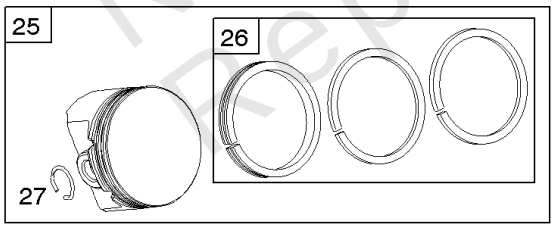


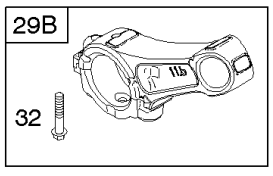


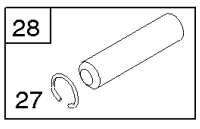


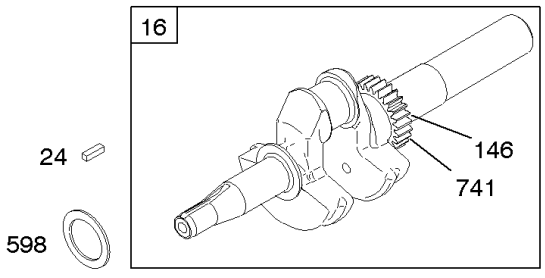


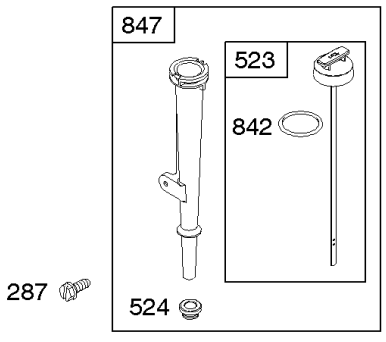


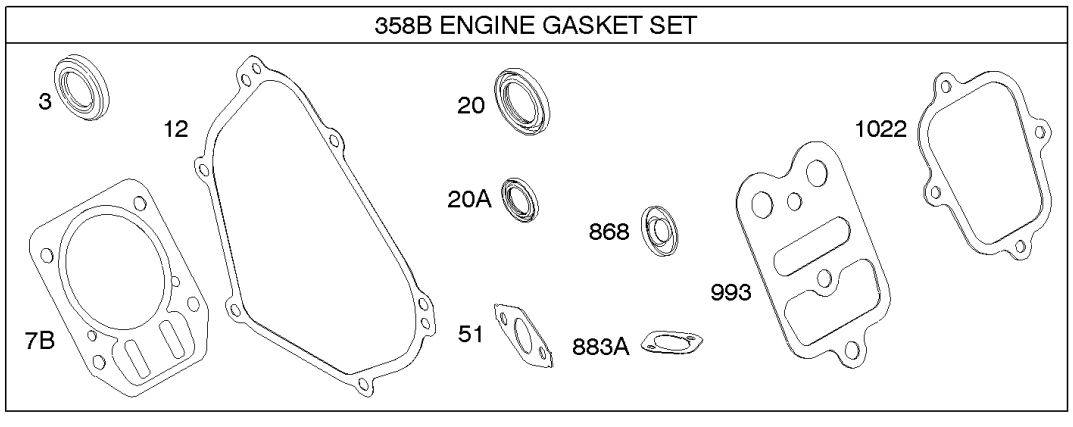


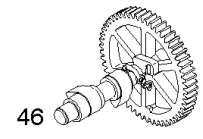


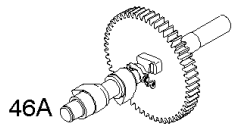


Not For Reproduction

| REF NO | PART NO | QTY | DESCRIPTION |
|---|---|---|---|
| 1 | 794188 | | CYLINDER ASSEMBLY |
| 2 | 399269 | | KIT, Bushing/Seal<br>-(Magneto Side) |
| 3 | 299819S | | SEAL, Oil<br>-(Magneto Side) |
| 7B | 791716 | | GASKET, Cylinder Head |
| 12 | 699485 | | GASKET, Crankcase |
| 15 | 691686 | | PLUG-OIL DRAIN |
| 15B | 695757 | | PLUG, Oil Drain |
| 16 | 792208 | | CRANKSHAFT |
| 18 | 699804 | | COVER, Crankcase |
| 18B | 699677 | | COVER, Crankcase |
| 20 | 692550 | | SEAL-OIL<br>-(PTO Side) |
| 20A | 691952 | | SEAL, Oil<br>-(PTO Side) (Auxiliary Drive) |
| 21 | 281658S | | CAP, Oil Fill |
| 22 | 699478 | | SCREW<br>-(Crankcase Cover/Sump) |
| 24 | 796335 | | KEY, Flywheel |
| 25 | 791786 | | PISTON ASSEMBLY<br>-(Standard) |
| 25 | 791791 | | PISTON ASSEMBLY<br>-(.020 Oversize) |
| 26 | 791787 | | SET, Ring<br>-(Standard) |
| 26 | 791792 | | SET, Ring<br>-(.020 Oversize) |
| 27 | 690975 | | LOCK, Piston Pin |
| 28 | 690229 | | PIN, Piston<br>-(Standard) |
| 29B | 791783 | | ROD, Connecting |
| 32 | 791784 | | SCREW<br>-(Connecting Rod) |
| 46 | 693404 | | CAMSHAFT |
| 46A | 695285 | | CAMSHAFT |
| 51 | 791718 | | GASKET, Intake |
| 146 | 690979 | | KEY, Woodruff |
| 219 | 693578 | | GEAR, Governor |
| 220 | 691724 | | WASHER<br>-(Governor Gear) |
| 287 | 699629 | | SCREW<br>-(Dipstick Tube) |
| 306A | 695710 | | SHIELD, Cylinder |
| 307 | 699483 | | SCREW<br>-(Cylinder Shield) |
| 307A | 699234 | | SCREW<br>-(Cylinder Shield) |
| 307B | 790557 | | SCREW<br>-(Cylinder Shield) |
| 358B | 791797 | | GASKET SET, Engine |
| 523 | 790546 | | DIPSTICK<br>-Used Before Code Date 10022200 |
| 523 | 798469 | | DIPSTICK<br>-Used After Code Date 10022100 |
| 524 | 281370S | | SEAL, Dipstick Tube<br>-(Dipstick Tube) |

Not For Reproduction

Copyright © Briggs & Stratton. All Rights reserved

# Camshaft, Crankcase Cover, Crankshaft, Cylinder, Lubrication, Piston Group

Mfg. No: 15A114-0117-E1

| 1319 WARNING LABEL | 1058 OPERATOR'S MANUAL | 1330 REPAIR MANUAL | 1019 LABEL KIT |
|---|---|---|---|

***REQUIRED** when replacing parts with warning labels affixed.*

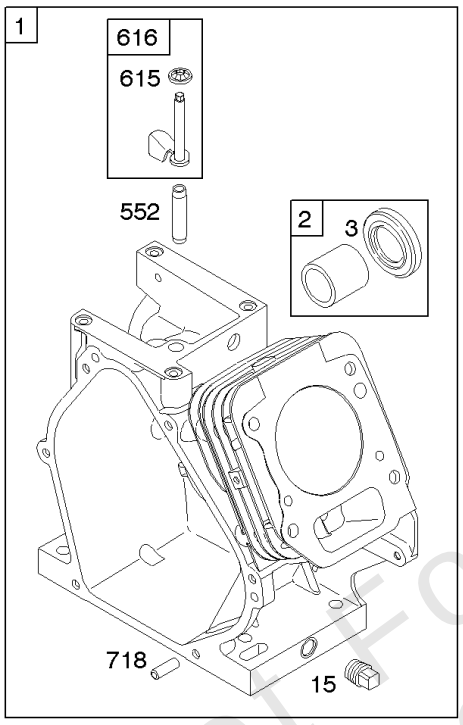


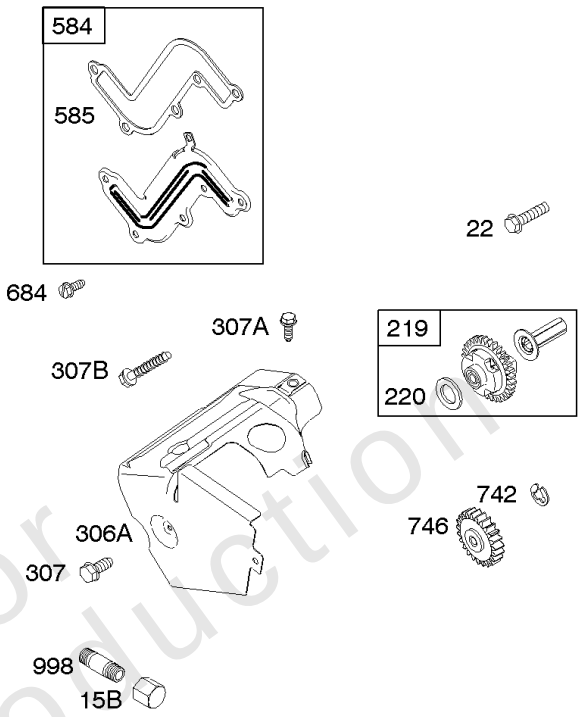


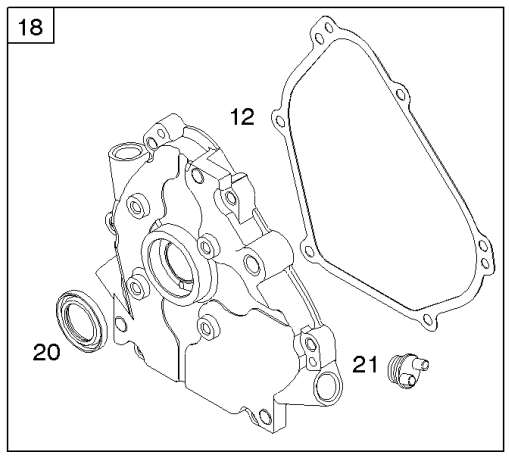


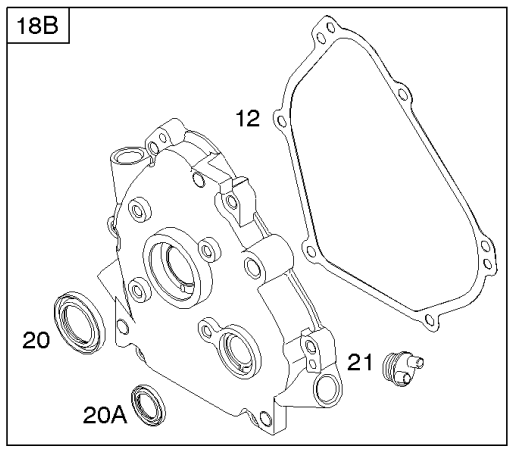


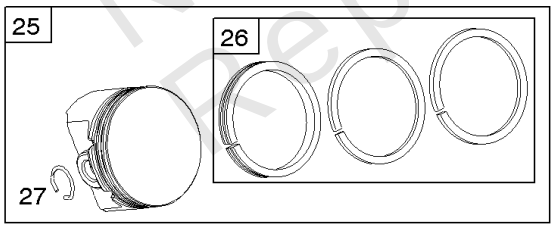


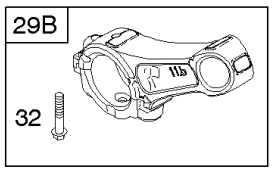


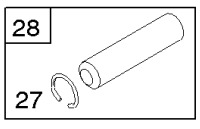


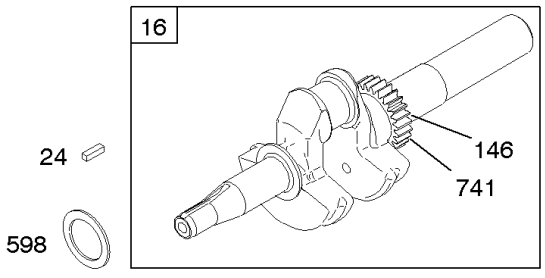


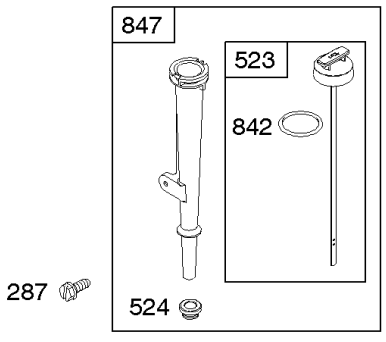


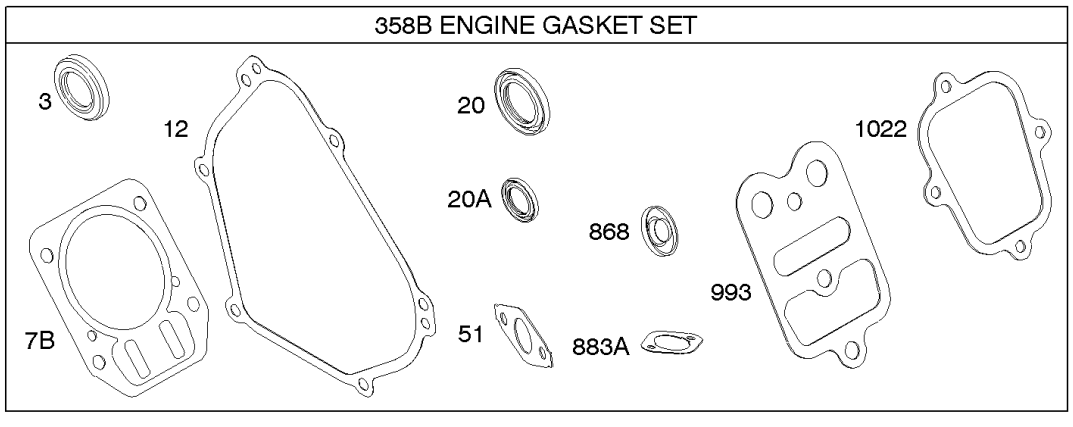


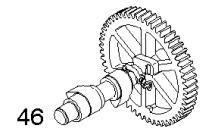


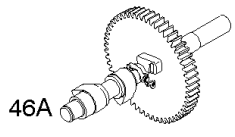


Not For Reproduction

| REF NO | PART NO | QTY | DESCRIPTION |
|---|---|---|---|
| 552 | 692346 | | BUSHING, Governor Crank |
| 584 | 791759 | | COVER, Breather Passage |
| 585 | 791760 | | GASKET, Breather Passage |
| 598 | 220624 | | SHIM, End Play<br>-(Crankshaft or Camshaft Bearing) |
| 615 | 692576 | | RETAINER, Governor Shaft |
| 616 | 692547 | | CRANK, Governor |
| 684 | 791761 | | SCREW<br>-(Breather Passage Cover) |
| 718 | 690959 | | PIN, Locating |
| 741 | 695087 | | GEAR, Timing |
| 742 | 692564 | | RETAINER, E Ring |
| 746 | 790278 | | GEAR-IDLER |
| 842 | 691031 | | SEAL, O-Ring<br>-(Dipstick Tube) |
| 847 | 798468 | | DIPSTICK/TUBE ASSEMBLY<br>-Used After Code Date 10022100 |
| 847 | 790545 | | DIPSTICK/TUBE ASSEMBLY<br>-Used Before Code Date 10022200 |
| 868 | 692044 | | SEAL, Valve |
| 883A | 691893 | | GASKET-EXHAUST |
| 993 | 694088 | | GASKET, Cylinder Head Plate |
| 998 | 794701 | | PIPE, Oil<br>-(5 ) |
| 998 | 792928 | | PIPE, Oil<br>-(2 1/2 ) |
| 998 | 696683 | | PIPE, Oil<br>-(4 ) |
| 1019 | 791811 | | KIT, Label |
| 1022 | 691890 | | GASKET-ROCKER COVER |
| 1058 | 279128TRI | | MANUAL, Operator's |
| 1319 | 794467 | | LABEL, Warning |
| 1330 | 272147 | | MANUAL, Repair |

Not For Reproduction

Copyright © Briggs & Stratton. All Rights reserved

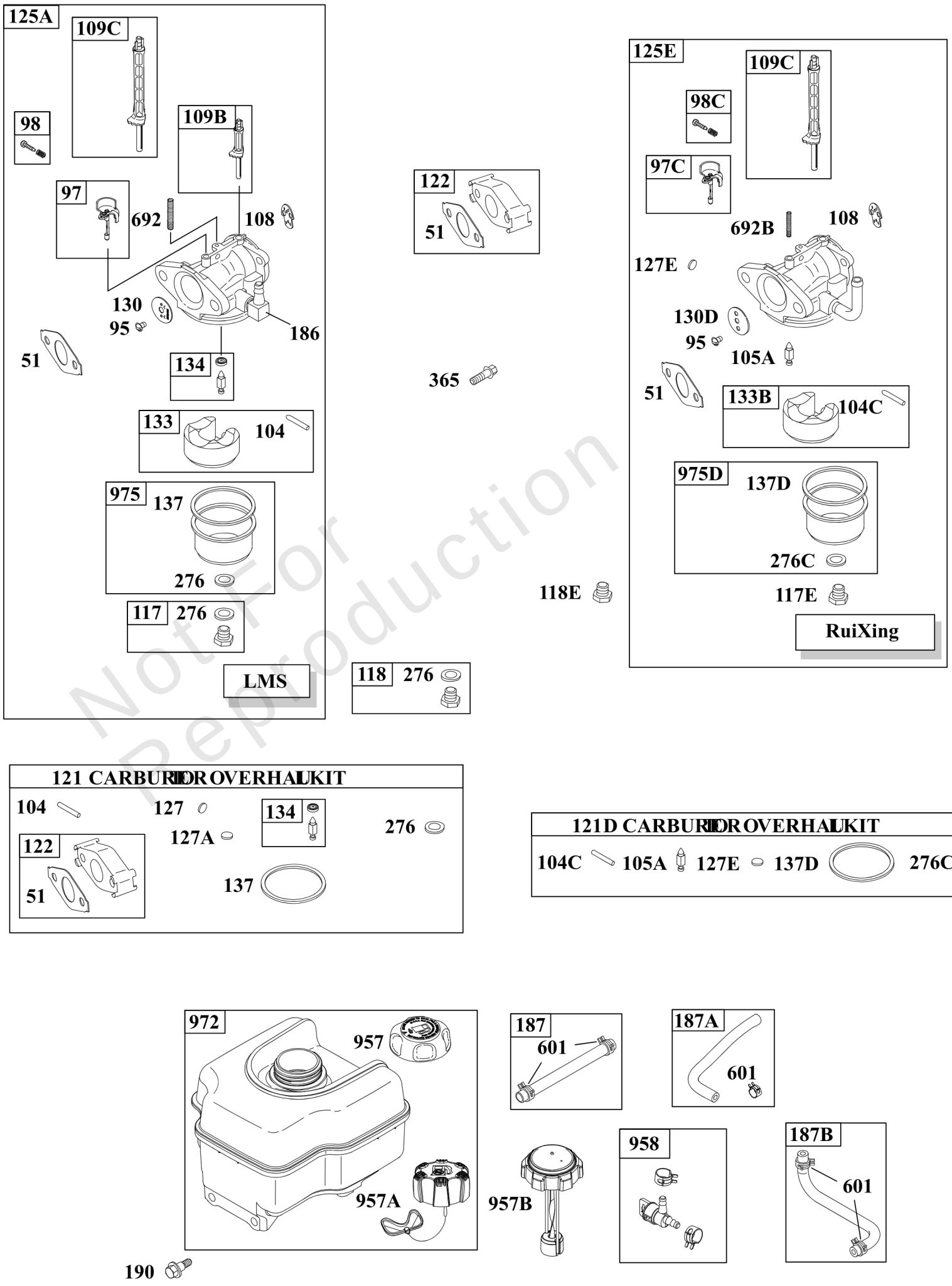


Not For Reproduction

## *Carburetor, Fuel Supply*

| REF NO | PART NO | QTY | DESCRIPTION |
|---|---|---|---|
| 51 | 791718 | | GASKET, Intake |
| 95 | 691636 | | SCREW<br>-(Throttle Valve) |
| 97 | 690024 | | SHAFT, Throttle |
| 97C | 797628 | | SHAFT, Throttle |
| 98 | 398185 | | KIT-IDLE SPEED<br>-(Idle Speed) (Lmt 26, 27, 28, 31) |
| 98C | 797156 | | KIT, Idle Speed |
| 104 | 691242 | | PIN, Float Hinge |
| 104C | 797622 | | PIN, Float Hinge |
| 105A | 797139 | | VALVE, Float Needle |
| 108 | 695807 | | VALVE, Choke |
| 109B | 695729 | | SHAFT, Choke |
| 109C | 791954 | | SHAFT, Choke |
| 117 | 694176 | | JET, Main<br>-(Standard) |
| 117E | 798930 | | JET, Main<br>-(Standard)<br>-Used Before Code Date 11080800 |
| 117E | 590906 | | JET, Main<br>-(Standard)<br>-Used After Code Date 11080700 |
| 118 | 695042 | | JET, Main<br>-(High Altitude) |
| 118E | 798661 | | JET, Main<br>-(High Altitude)<br>-Used Before Code Date 11080800 |
| 118E | 590440 | | JET, Main<br>-(High Altitude)<br>-Used After Code Date 11080700 |
| 121 | 792006 | | KIT, Carburetor Overhaul |
| 121D | 797634 | | KIT, Carburetor Overhaul |
| 122 | 791717 | | SPACER, Carburetor |
| 125A | 794588 | | CARBURETOR<br>-Used Before Code Date 10071000 |
| 125E | 590907 | | CARBURETOR<br>-Used After Code Date 11080700 |
| 125E | 798918 | | CARBURETOR<br>-Used After Code Date 10070900<br>-Used Before Code Date 11080800 |
| 127 | 694468 | | PLUG, Welch<br>-(Bowl Vent) |
| 127A | 691739 | | PLUG-WELCH |
| 127E | 797633 | | PLUG, Welch |
| 130 | 691181 | | VALVE-THROTTLE |
| 130D | 797630 | | VALVE, Throttle |
| 133 | 398187 | | FLOAT-CARBURETOR |
| 133B | 797136 | | FLOAT, Carburetor |
| 134 | 398188 | | KIT-NEEDLE/SEAT |
| 137 | 693981 | | GASKET-FLOAT BOWL |
| 137D | 798932 | | GASKET, Float Bowl |
| 186 | 692317 | | CONNECTOR-HOSE |
| 187 | 791766 | | LINE, Fuel<br>-(Cut To Required Length) |
| 187A | 798908 | | LINE, Fuel<br>-(Molded)<br>-Used After Code Date 10070900 |

Not For Reproduction

Copyright © Briggs & Stratton. All Rights reserved

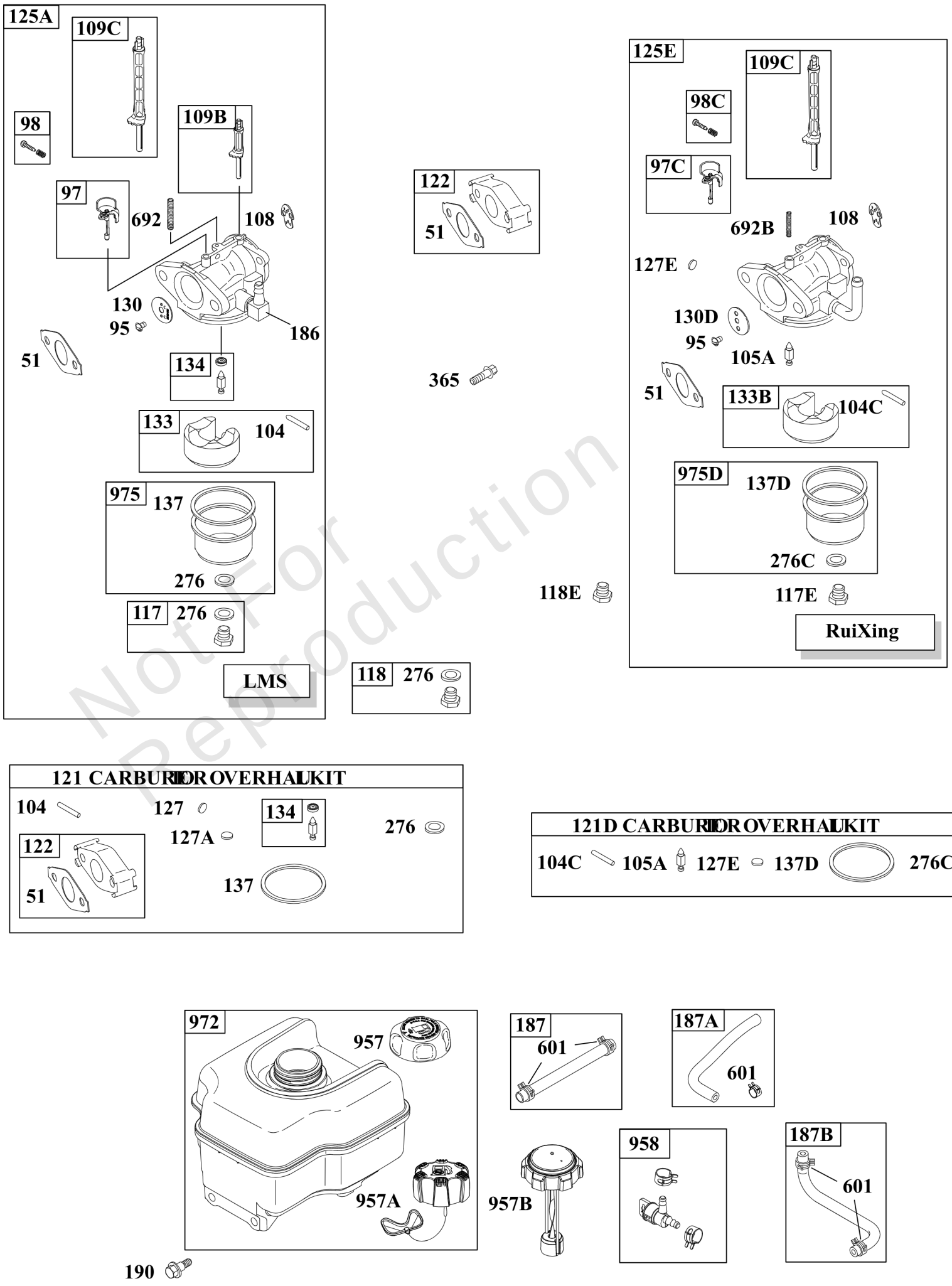


Not For Reproduction

## *Carburetor, Fuel Supply*

| REF NO | PART NO | QTY | DESCRIPTION |
|---|---|---|---|
| 187A | 791867 | | LINE, Fuel<br>-(Molded)<br>-Used Before Code Date 10071000 |
| 187B | 791874 | | LINE, Fuel<br>-(Molded)<br>-Used Before Code Date 10071000 |
| 187B | 798907 | | LINE, Fuel<br>-(Molded)<br>-Used After Code Date 10070900 |
| 190 | 699220 | | SCREW<br>-(Fuel Tank) |
| 276 | 271716 | | WASHER-SEALING |
| 276C | 797632 | | WASHER, Sealing |
| 365 | 699484 | | SCREW<br>-(Carburetor) |
| 601 | 791850 | | CLAMP, Hose |
| 692 | 690572 | | SPRING, Detent |
| 692B | 797624 | | SPRING, Detent |
| 957 | 792647 | | CAP, Fuel Tank<br>-(Plastic) (Fresh Start) |
| 957 | 795027 | | CAP, Fuel Tank<br>-(Plastic) (Text Free) |
| 957A | 799719 | | CAP, Fuel Tank<br>-(Plastic) (Carbon In Cap) |
| 957B | 698109 | | CAP, Fuel Tank<br>-(Plastic) |
| 958 | 698180 | | VALVE, Fuel Shutoff<br>-(Plastic) |
| 972 | 694260 | | TANK, Fuel<br>-(Plastic) |
| 975 | 493640 | | BOWL, Float |
| 975D | 798931 | | BOWL, Float |

Not For Reproduction

Mfg. No: 15A114-0117-E1

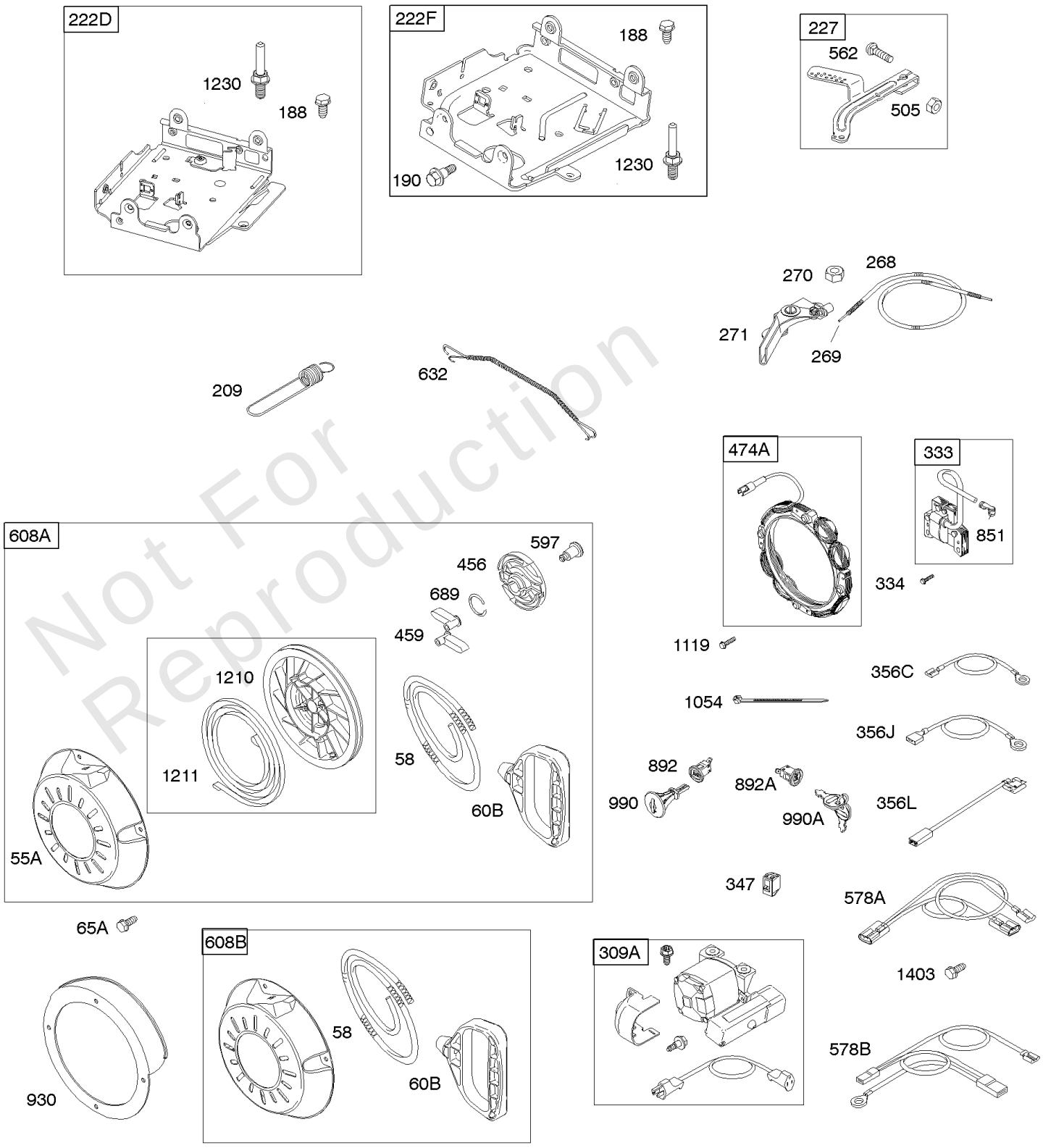


Not For Reproduction

## *Controls, Electric Starter, Governor Spring, Ignition, Rewind Starter*

| REF NO | PART NO | QTY | DESCRIPTION |
|---|---|---|---|
| 55A | 696710 | | HOUSING, Rewind Starter |
| 58 | 693389 | | ROPE, Starter<br>-(Cut To Required Length) |
| 60B | 699334 | | GRIP, Starter Rope |
| 65A | 699851 | | SCREW<br>-(Rewind Starter) |
| 188 | 699479 | | SCREW<br>-(Control Bracket) |
| 190 | 699220 | | SCREW<br>-(Fuel Tank) |
| 209 | 692571 | | SPRING, Governor<br>-Used Before Code Date 10071000 |
| 209 | 693206 | | SPRING, Governor<br>-Used After Code Date 10070900 |
| 222D | 790549 | | BRACKET, Control<br>-Used Before Code Date 06051500 |
| 222F | 793100 | | BRACKET, Control<br>-Used After Code Date 06051400 |
| 227 | 692573 | | LEVER, Governor Control |
| 268 | 691025 | | CASING, Control Wire<br>-(Cut To Required Length) |
| 269 | 691026 | | WIRE, Control<br>-(Cut To Required Length) |
| 270 | 691027 | | NUT<br>-(Control Wire Casing) (Control Wire Casing) |
| 271 | 691028 | | LEVER, Control |
| 309A | 699786 | | MOTOR, Starter |
| 333 | 695711 | | ARMATURE, Magneto |
| 334 | 699477 | | SCREW<br>-(Magneto Armature) |
| 347 | 698338 | | SWITCH, Rocker |
| 356C | 695630 | | WIRE, Stop |
| 356L | 790552 | | WIRE, Stop |
| 356J | 692603 | | WIRE, Stop |
| 456 | 692299 | | PLATE-PAWL FRICTION |
| 459 | 281505S | | PAWL-RATCHET |
| 474A | 793640 | | ALTERNATOR |
| 505 | 691251 | | NUT<br>-(Governor Control Lever) |
| 562 | 691119 | | BOLT<br>-(Governor Control Lever) |
| 578A | 790481 | | WIRE ASSEMBLY |
| 578B | 791956 | | WIRE ASSEMBLY |
| 597 | 691696 | | SCREW<br>-(Pawl Friction Plate) |
| 608A | 699335 | | STARTER-REWIND<br>-Used Before Code Date 10072000 |
| 608B | 797430 | | STARTER, Rewind<br>-Used After Code Date 10071900 |
| 632 | 692653 | | SPRING/LINK, Mechanical Governor |
| 689 | 691855 | | SPRING-FRICTION |
| 851 | 493880S | | TERMINAL, Spark Plug |
| 892 | 791944 | | SWITCH, Key |
| 892A | 798182 | | SWITCH, Key |
| 930 | 696709 | | GUARD, Rewind |
| 990 | 695756 | | SET, Key |

Not For Reproduction

Copyright © Briggs & Stratton. All Rights reserved

# Controls, Electric Starter, Governor Spring, Ignition, Rewind Starter

Mfg. No: 15A114-0117-E1

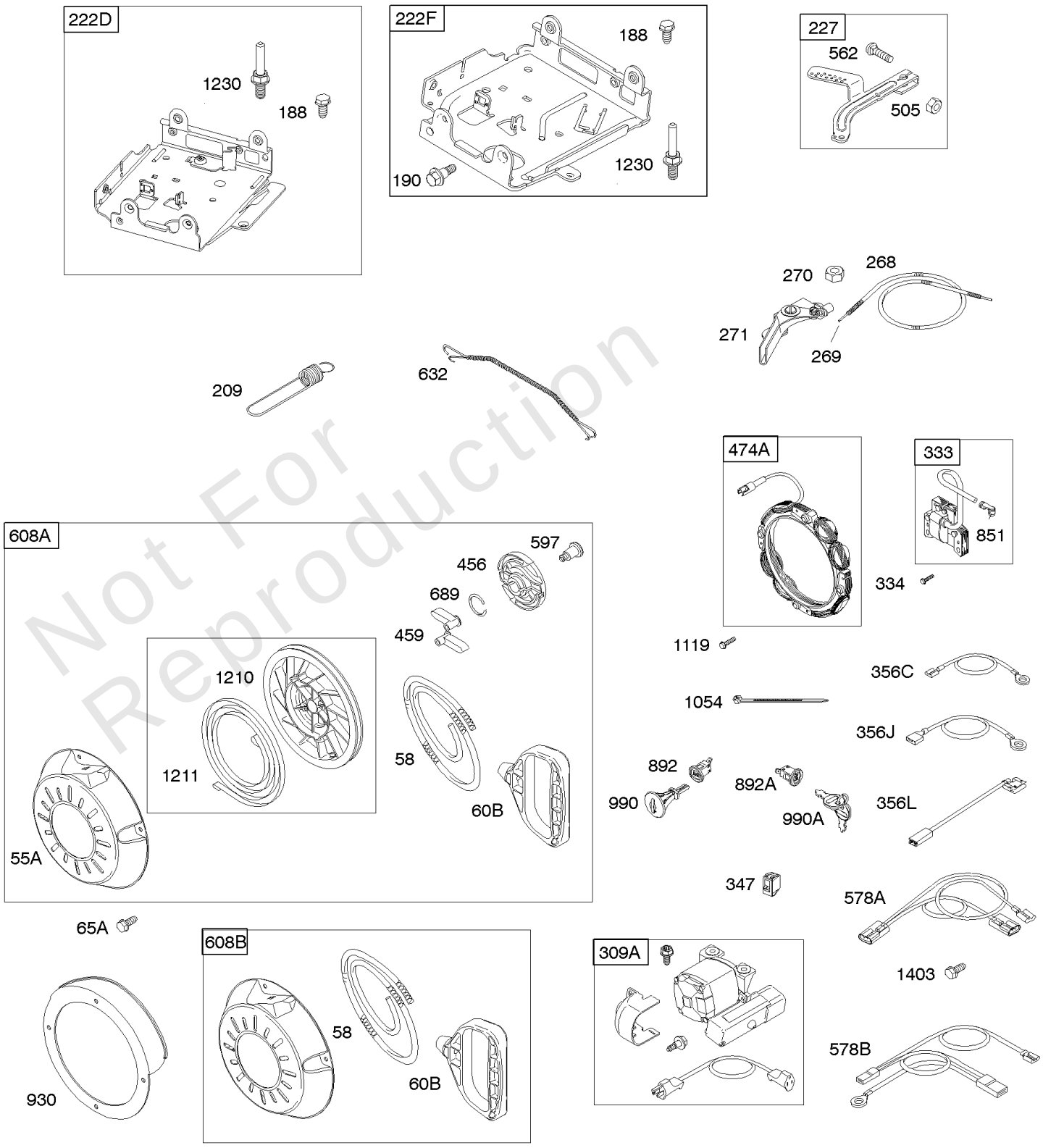


Not For Reproduction

## *Controls, Electric Starter, Governor Spring, Ignition, Rewind Starter*

| REF NO | PART NO | QTY | DESCRIPTION |
|---|---|---|---|
| 990A | 798177 | | SET, Key |
| 1054 | 280275 | | TIE, Cable |
| 1119 | 699772 | | SCREW<br>-(Alternator) |
| 1210 | 498144 | | PULLEY/SPRING ASSY<br>-(Pulley) |
| 1211 | 498144 | | PULLEY/SPRING ASSY<br>-(Spring) |
| 1230 | 699847 | | STUD<br>-(Control Bracket) |
| 1403 | 699481 | | SCREW<br>-(Wire Assembly) |

Not For Reproduction

Copyright © Briggs & Stratton. All Rights reserved

# Cylinder Head

Mfg. No: 15A114-0117-E1

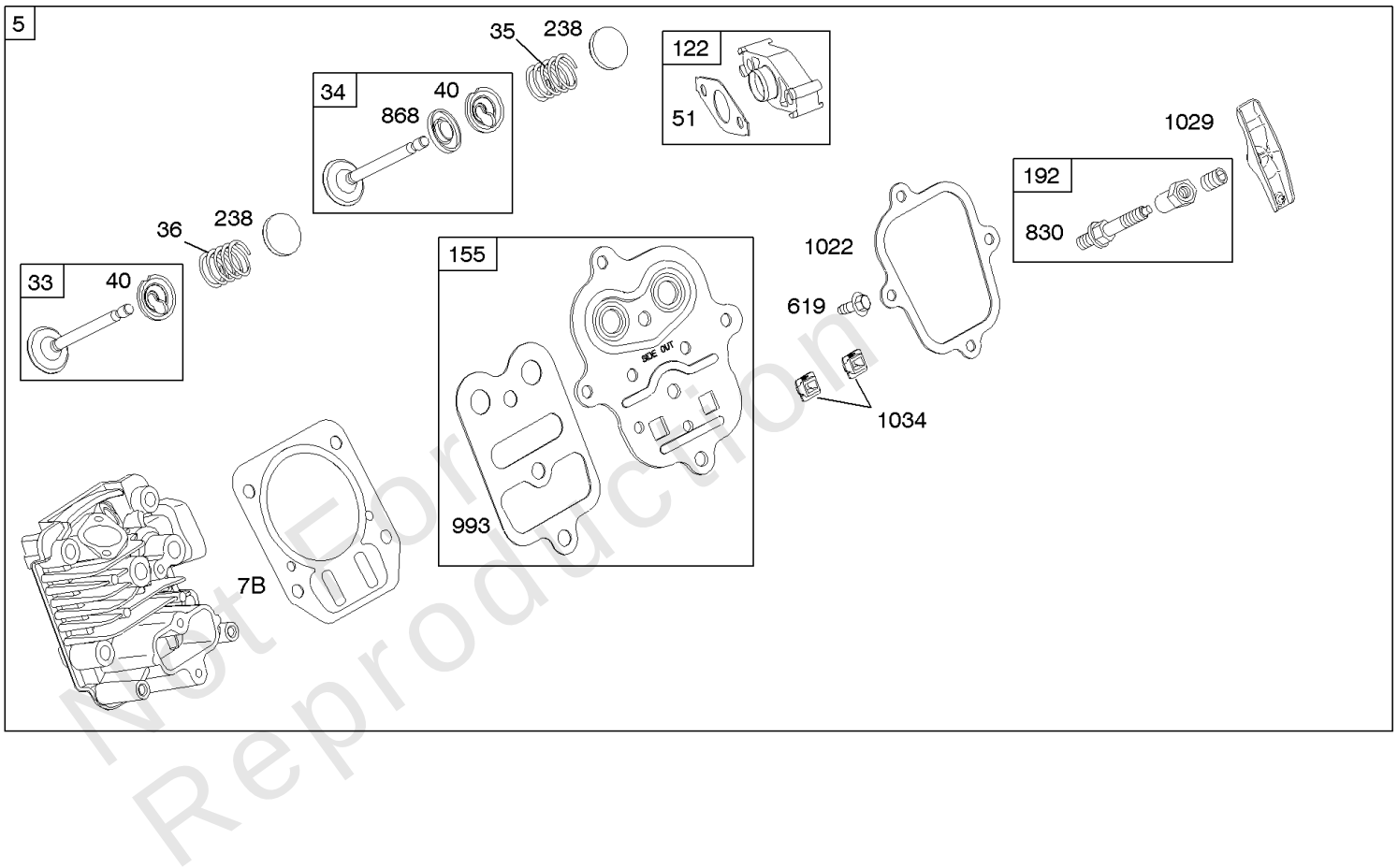


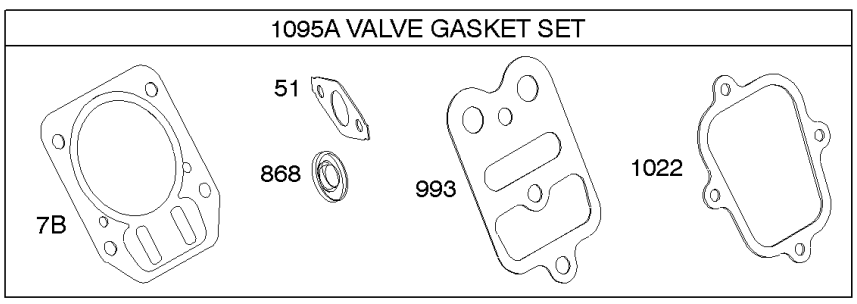


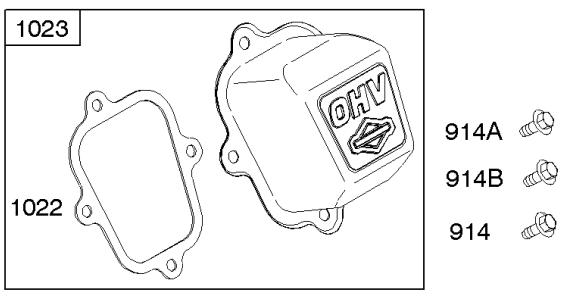


Not For Reproduction

## *Cylinder Head*

| REF NO | PART NO | QTY | DESCRIPTION |
|---|---|---|---|
| 5 | 791720 | | HEAD, Cylinder |
| 7B | 791716 | | GASKET, Cylinder Head |
| 13 | 699482 | | SCREW<br>-(Cylinder Head) |
| 33 | 499642 | | VALVE, Exhaust |
| 34 | 499641 | | VALVE, Intake |
| 35 | 691304 | | SPRING, Valve<br>-(Intake) |
| 36 | 691304 | | SPRING, Valve<br>-(Exhaust) |
| 40 | 692194 | | RETAINER, Valve |
| 45 | 690977 | | TAPPET, Valve |
| 51 | 791718 | | GASKET, Intake |
| 122 | 791717 | | SPACER, Carburetor |
| 155 | 698214 | | PLATE, Cylinder Head<br>-(SAE)<br>-Used Before Code Date 09061800 |
| 155 | 797442 | | PLATE, Cylinder Head<br>-(Metric)<br>-Used After Code Date 09061700 |
| 192 | 797440 | | ADJUSTER. Rocker Arm<br>-(Metric)<br>-Used After Code Date 09061700 |
| 192 | 694543 | | ADJUSTER-ROCKER ARM<br>-(SAE)<br>-Used Before Code Date 09061800 |
| 238 | 691300 | | CAP, Valve |
| 337 | 691043 | | PLUG, Spark<br>-(EMS) |
| 337 | 491055S | | PLUG, Spark<br>-(Resistor) |
| 337 | 84007216 | | PLUG, SPARK<br>-(China Only) |
| 383 | 19374S | | WRENCH, Spark Plug |
| 619 | 699481 | | SCREW<br>-(Cylinder Head Plate) |
| 635A | 692927 | | BOOT, Spark Plug |
| 830 | 797441 | | STUD, Rocker Arm<br>-(Rocker Arm) (Metric)<br>-Used After Code Date 09061700 |
| 830 | 694544 | | STUD-ROCKER ARM<br>-(Rocker Arm) (SAE)<br>-Used Before Code Date 09061800 |
| 868 | 692044 | | SEAL, Valve |
| 914 | 699481 | | SCREW<br>-(Rocker Cover) (Bottom) |
| 914A | 692557 | | SCREW<br>-(Rocker Cover) (Top)<br>-Used Before Code Date 09061800 |
| 914A | 797444 | | SCREW<br>-(Rocker Cover) (Top)<br>-Used After Code Date 09061700 |
| 914B | 697551 | | SCREW<br>-(Rocker Cover) (Center)<br>-Used Before Code Date 09061800 |
| 914B | 797444S | | SCREW<br>-(Rocker Cover) (Center)<br>-Used After Code Date 09061700 |
| 993 | 694088 | | GASKET, Cylinder Head Plate |

Not For Reproduction

Copyright © Briggs & Stratton. All Rights reserved

# Cylinder Head

Mfg. No: 15A114-0117-E1

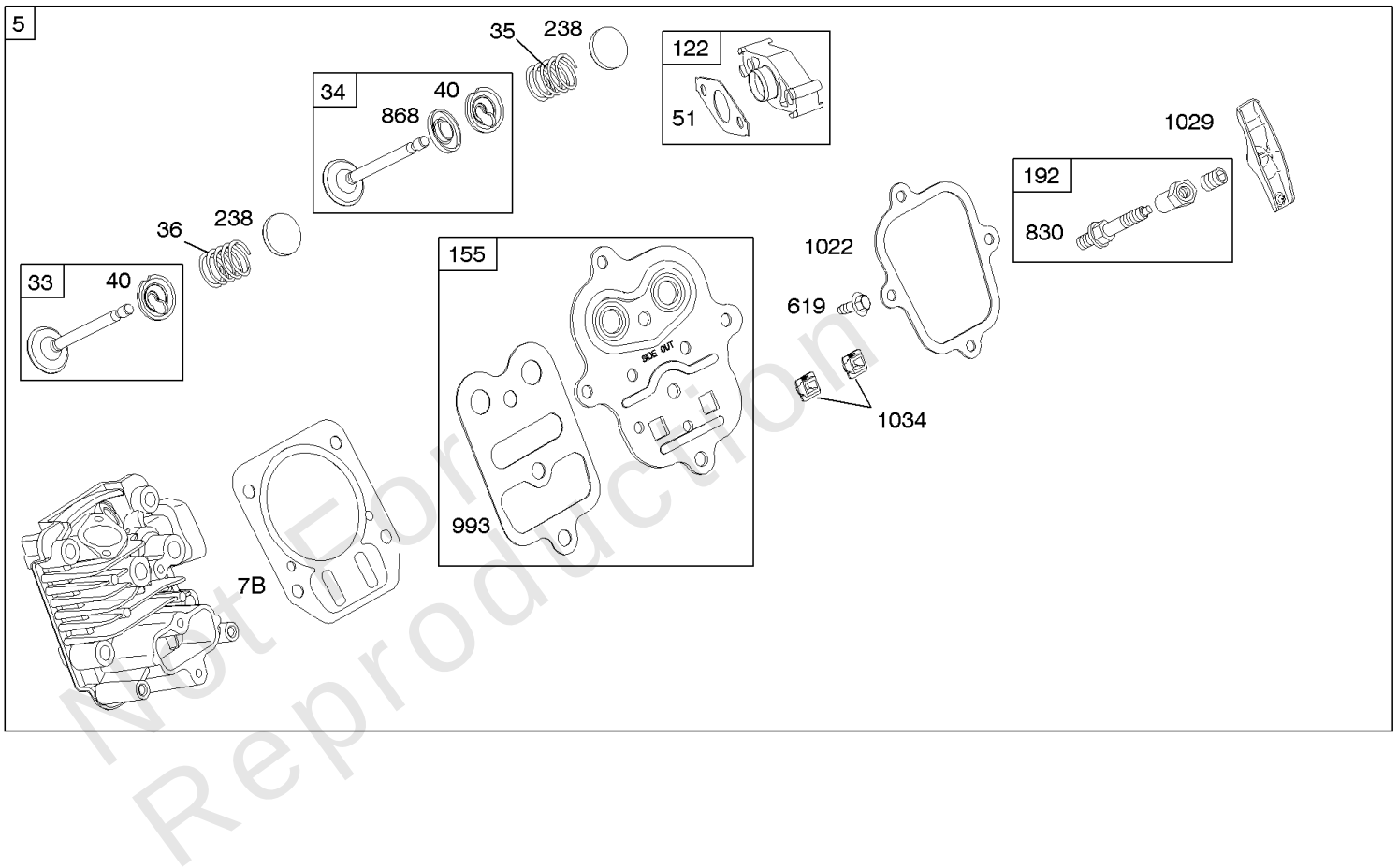


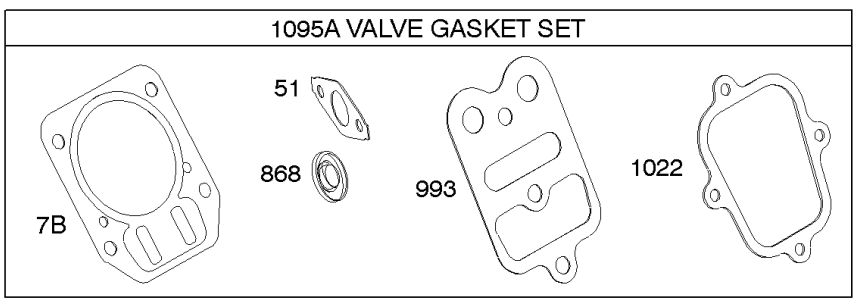


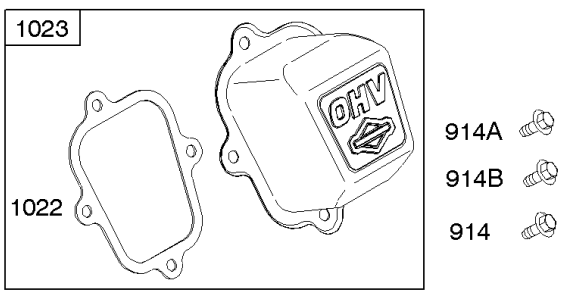


Not For Reproduction

## *Cylinder Head*

| REF NO | PART NO | QTY | DESCRIPTION |
|---|---|---|---|
| 1022 | 691890 | | GASKET-ROCKER COVER |
| 1023 | 499924 | | COVER, Rocker |
| 1026 | 790287 | | ROD, Push |
| 1029 | 691230 | | ARM, Rocker<br>-(SAE)<br>-Used Before Code Date 09061800 |
| 1029 | 797443 | | ARM, Rocker<br>-(Metric)<br>-Used After Code Date 09061700 |
| 1034 | 691343 | | GUIDE, Push Rod |
| 1095A | 791798 | | GASKET SET, Valve |

Not For Reproduction

Copyright © Briggs & Stratton. All Rights reserved

## *Replacement Engine - US & Canada*

| REF NO | PART NO | QTY | DESCRIPTION |
|---|---|---|---|
| | 15C1140417 | 1 | Replacement Engine |
| | 795433 | 1 | Replacement Short Block |
| | ----- | | Top No-Load Speed: 3600<br>-Trim: ALL |
| | ----- | | Service Note: For all Go-Karts use only a Model 136200 series engine as a replacement, regardless of the original Model. |
| | ----- | | Service Note: Transfer Muffler and/or Spark Arrester Assembly from the original engine if suitable for additional service or add new parts as required |

Not For Reproduction

Copyright © Briggs & Stratton. All Rights reserved