Parts Manual

Mfg. No: 150217-0130-B8

Copyright © Briggs & Stratton. All Rights reserved

22-Jun-2026

Model Components

Page

Air Cleaner, Exhaust System. 4
Blower Housing, Electric Starter, Flywheel. 8
Camshaft, Crankshaft, Cylinder, Piston Group. 12
Carburetor, Fuel Supply. 16
Controls, Governor Spring, Ignition, Rewind Starter. 20
Crankcase Cover, Lubrication. 24
Cylinder Head. 26
Replacement Engine - US & Canada. 30

Not For Reproduction

Copyright © Briggs & Stratton. All Rights reserved

Mfg. No: 150217-0130-B8

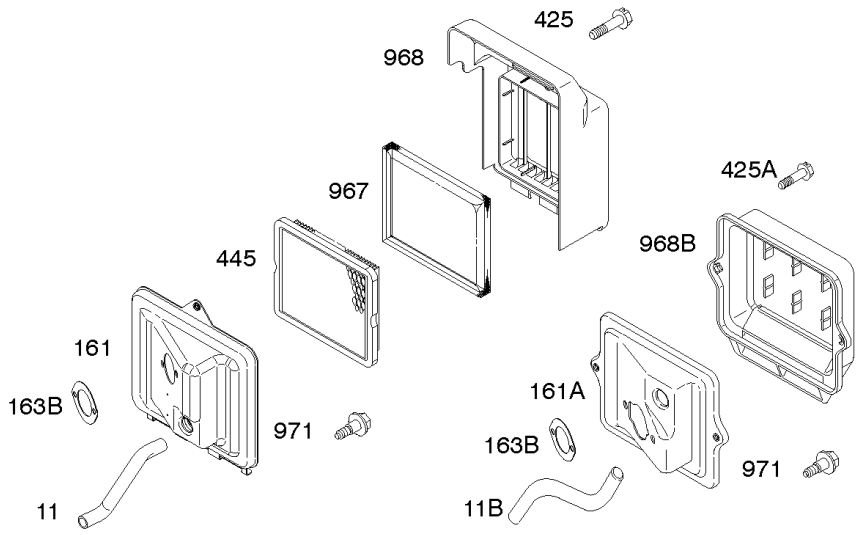

Not For Reproduction

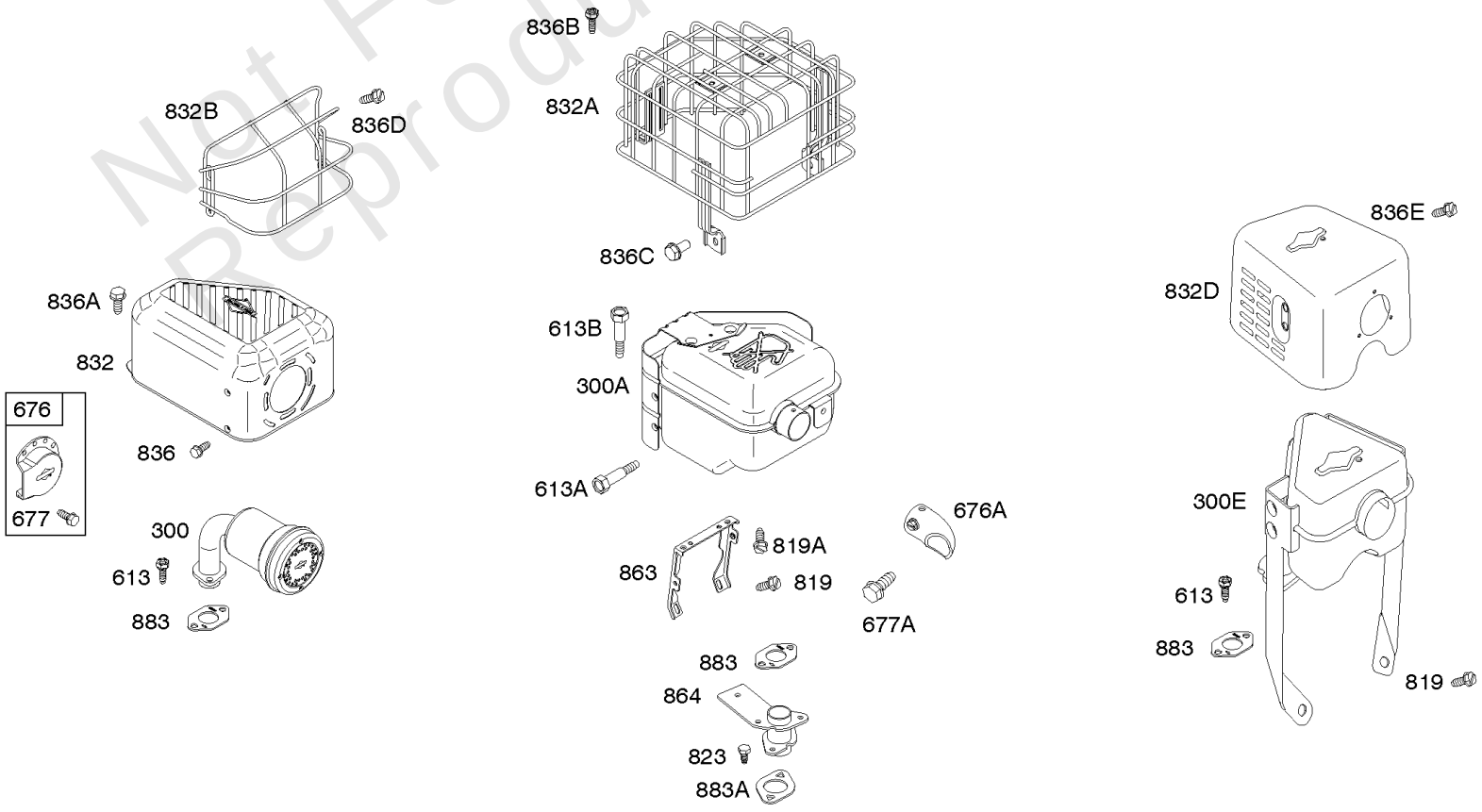

Copyright © Briggs & Stratton. All Rights reserved

Air Cleaner, Exhaust System

REF NO	PART NO	QTY	DESCRIPTION
11	692600		TUBE, Breather -(Flat Panel Air Cleaner)
11B	790632		TUBE, Breather -(Ultra Low Mount Air Cleaner)
161	699207		BASE-AIR CLEANER -(Flat Panel Air Cleaner)
161A	790631		BASE, Air Cleaner -(Ultra Low Mount Air Cleaner)
163B	696024		GASKET, Air Cleaner -(Flat Panel Air Cleaner)
300	693593		MUFFLER
300A	797433		MUFFLER
300E	594001		MUFFLER
425	699208		SCREW -(Air Cleaner Cover)
425A	699492		SCREW -(Air Cleaner Cover)
445	595030		FILTER, A/C Cartridge
613	791972		SCREW -(Muffler)
613A	699481		SCREW -(Muffler)
613B	799081		SCREW -(Muffler)
676	796956		DEFLECTOR, Muffler
676A	697816		DEFLECTOR, Muffler
677	690661		SCREW -(Muffler Deflector) (SAE)
677	699203		SCREW -(Muffler Deflector) (Metric)
677A	699776		SCREW -(Muffler Deflector)
819	699233		SCREW -(Muffler Bracket)
819A	699481		SCREW -(Muffler Bracket)
823	791972		SCREW -(Muffler Adapter)
832	593953		GUARD, Muffler
832A	697818		GUARD, Muffler
832B	696516		MUFFLER
832D	796240		GUARD, Muffler
836	699203		SCREW -(Muffler Guard)
836A	594002		SCREW -(Muffler Guard)
836D	699204		SCREW -(Muffler Guard)
836C	699234		SCREW -(Muffler Guard)
836E	699755		SCREW -(Muffler Guard)
836B	791972		SCREW -(Muffler Guard)
863	699229		BRACKET, Muffler
864	699232		ADAPTER, Muffler
883	691893		GASKET-EXHAUST -Used Before Code Date 14090100

Not For Reproduction

Copyright © Briggs & Stratton. All Rights reserved

Mfg. No: 150217-0130-B8

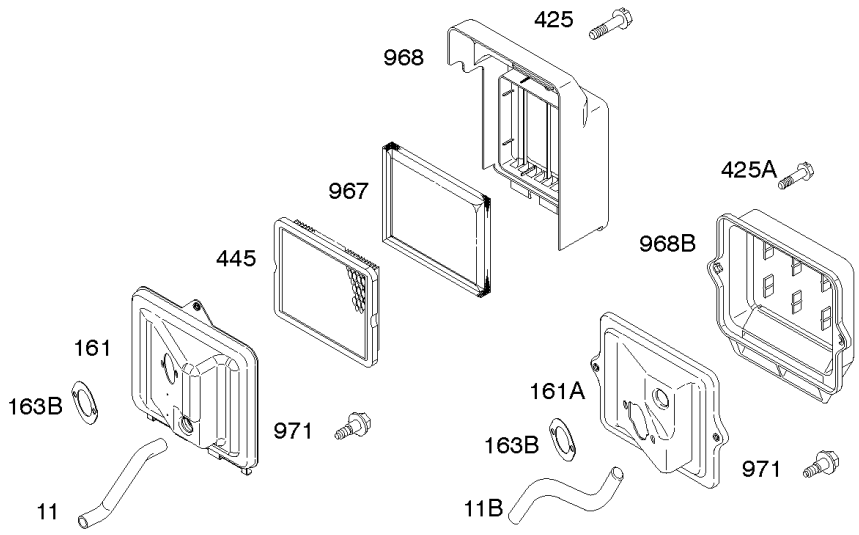

Not For Reproduction

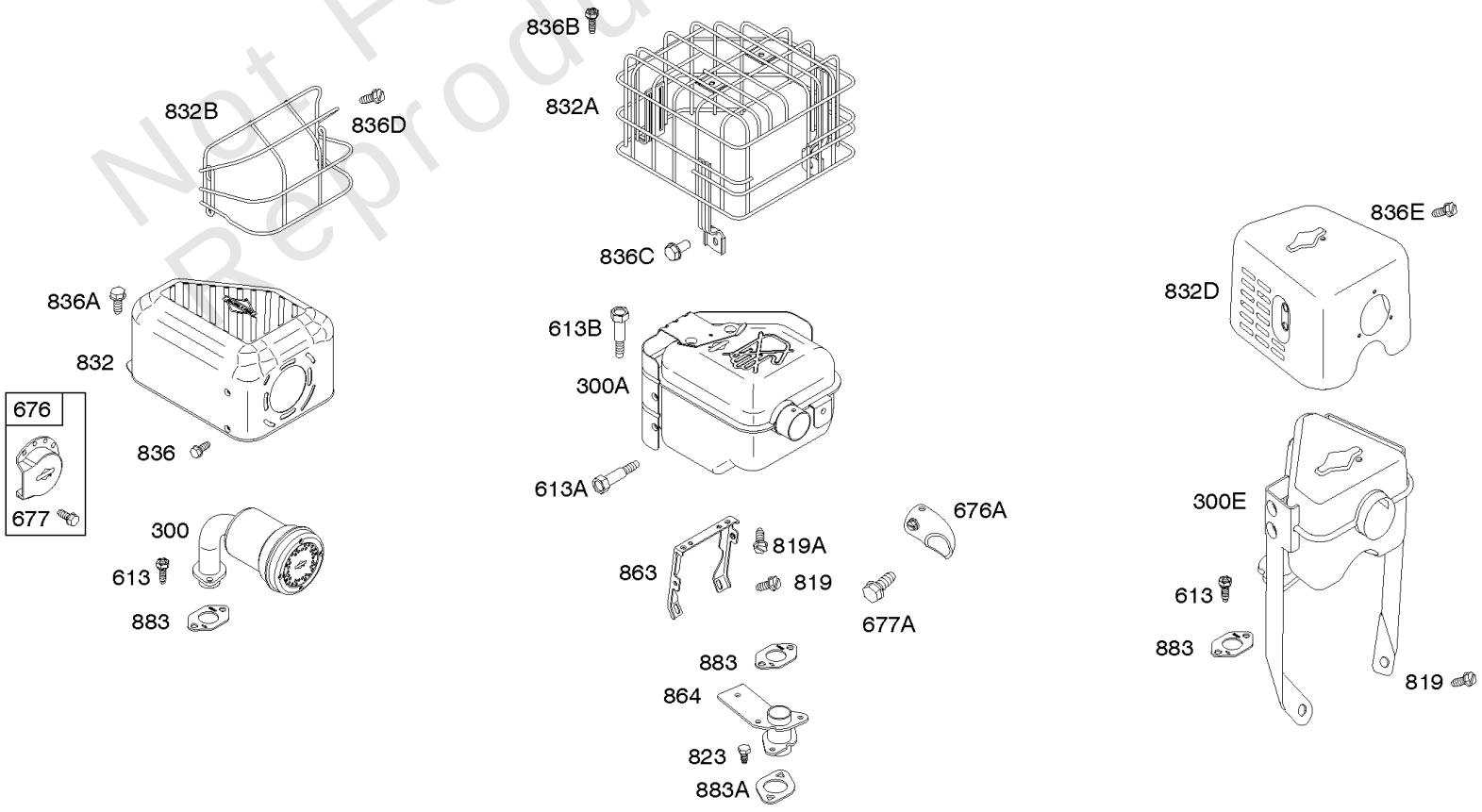

Air Cleaner, Exhaust System

REF NO	PART NO	QTY	DESCRIPTION
883	798516		GASKET, Exhaust -Used After Code Date 14083100
883A	692237		GASKET-EXHAUST
967	493537S		FILTER, Air Cleaner Foam -(Flat Panel)
968	692584		COVER, Air Cleaner -(Flat Panel Air Cleaner)
968B	791082		COVER, Air Cleaner -(Ultra Low Mount Air Cleaner)
971	690370		SCREW -(Air Cleaner Base to Carburetor/Throttle Body) (SAE)
971	798649		SCREW -(Air Cleaner Base to Carburetor/Throttle Body) (Metric)

Not For Reproduction

Copyright © Briggs & Stratton. All Rights reserved

Blower Housing, Electric Starter, Flywheel

Mfg. No: 150217-0130-B8

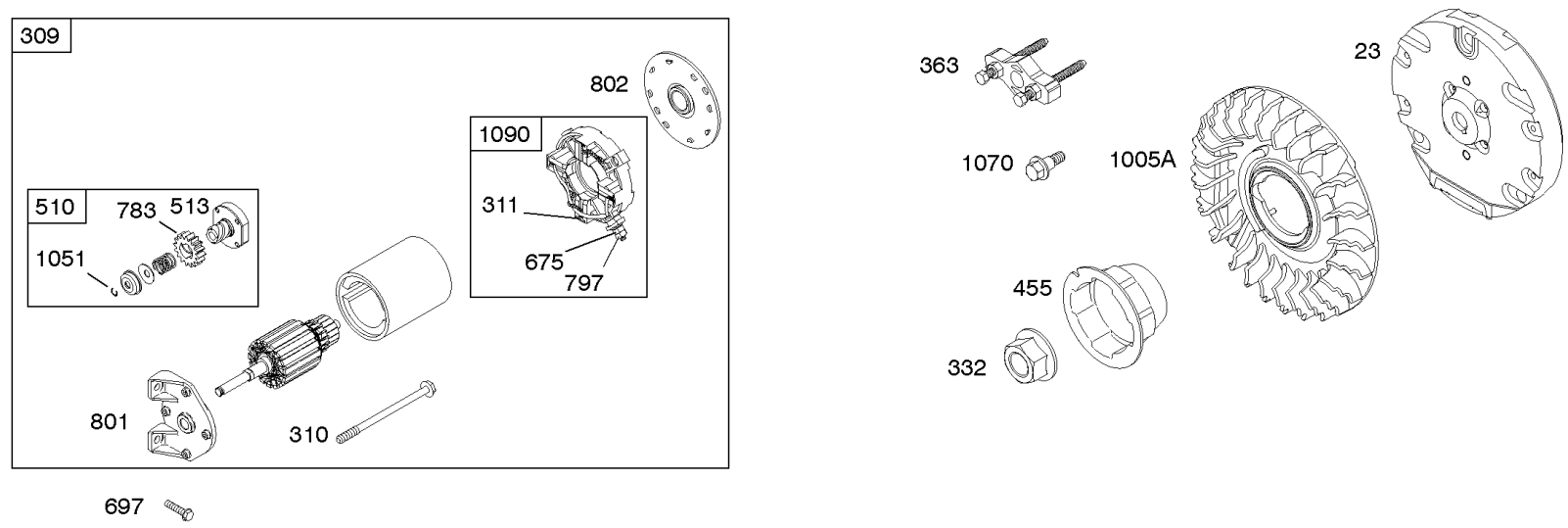

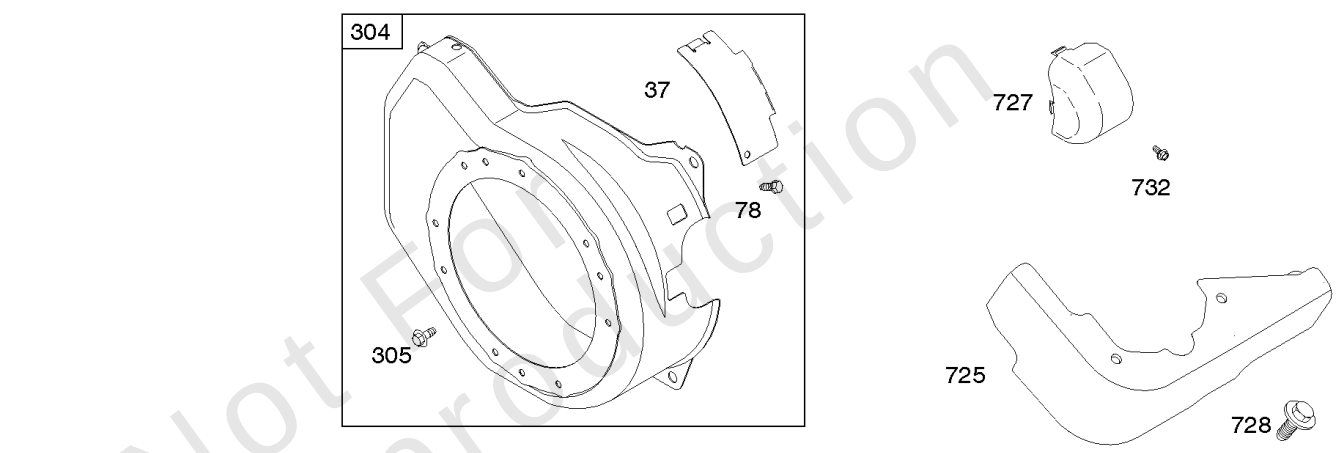

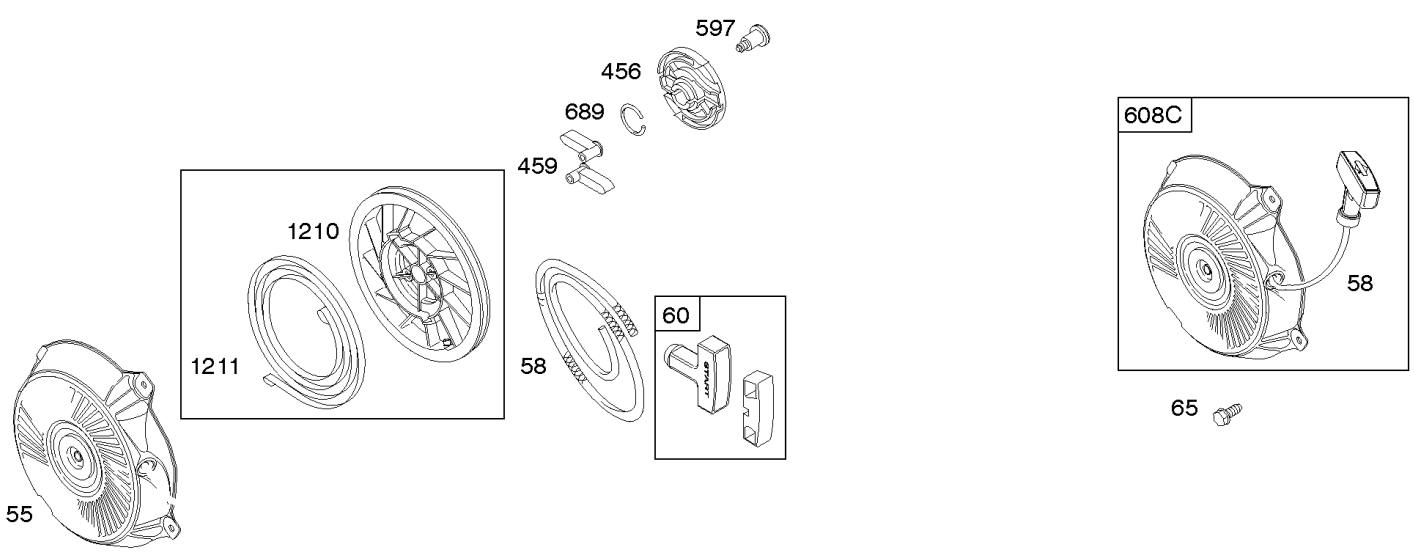

Not For Reproduction

Blower Housing, Electric Starter, Flywheel

REF NO	PART NO	QTY	DESCRIPTION
23	592888		FLYWHEEL
37	699661		GUARD, Flywheel
55	791848		HOUSING, Rewind Starter -Used After Code Date 08030200 -Used Before Code Date 12010100
55	691422		HOUSING, Rewind Starter -(Rewind Starter Parts Used With 3MM Diameter Starter Rope) -Used Before Code Date 08030300
55	-----		Housing-Rewind Starter -(Not Serviced Separate. Service With Rewind Assembly.) -Used After Code Date 11123100
58	693389		ROPE, Starter -(Cut To Required Length) -Used After Code Date 08030200
58	693389		ROPE, Starter -(Cut To Required Length) (Rewind Starter Parts Used With 3MM Diameter Starter Rope) -Used Before Code Date 08030300
58	66574		ROPE, Starter -(Rewind Starter Parts Used With 5MM Diameter Starter Rope) -Used Before Code Date 08030300
60	490652		GRIP-STARTER ROPE -(2 Piece)
65	699228		SCREW -(Rewind Starter)
78	699205		SCREW -(Flywheel Guard)
304	699598		HOUSING, Blower
305	699481		SCREW -(Blower Housing)
309	798790		MOTOR, Starter
310	690323		SCREW -(Starter Motor)
311	497608		SET, Brush
332	591988		NUT -(Flywheel)
363	19203		PULLER, Flywheel
455	591302		CUP, Flywheel
456	-----		Plate-Pawl Friction -(Not Serviced Separate. Service With Rewind Assembly.) -Used After Code Date 11123100
456	692299		PLATE-PAWL FRICTION -Used Before Code Date 12010100
459	281505S		PAWL-RATCHET -Used Before Code Date 12010100
459	-----		Pawl-Ratchet -(Not Serviced Separate. Service With Rewind Assembly.) -Used After Code Date 11123100
510	499308		DRIVE-STARTER
513	692024		CLUTCH, Drive
597	-----		Screw -(Pawl Friction Plate) (Not Serviced Separate. Service With Rewind Assembly.) -Used After Code Date 11123100
597	691696		SCREW -(Pawl Friction Plate) -Used Before Code Date 12010100
608C	591301		STARTER, Rewind
675	691261		WASHER -(Brush Retainer)
689	691855		SPRING-FRICTION -Used Before Code Date 12010100

Not For Reproduction

Blower Housing, Electric Starter, Flywheel

Mfg. No: 150217-0130-B8

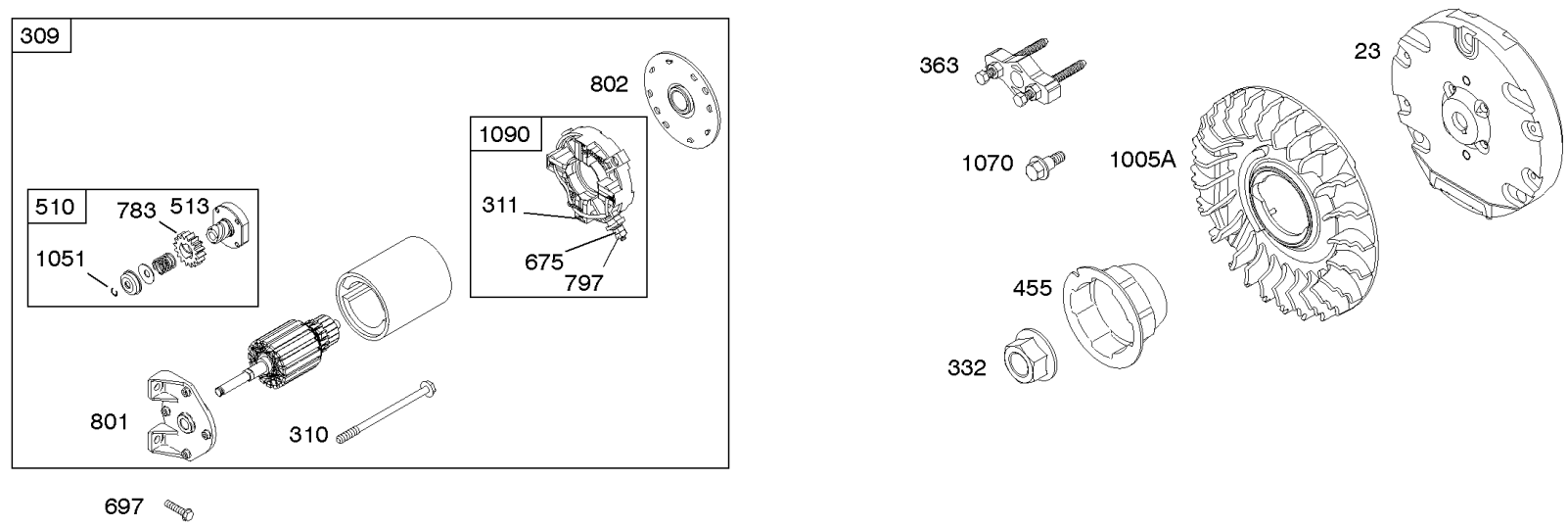

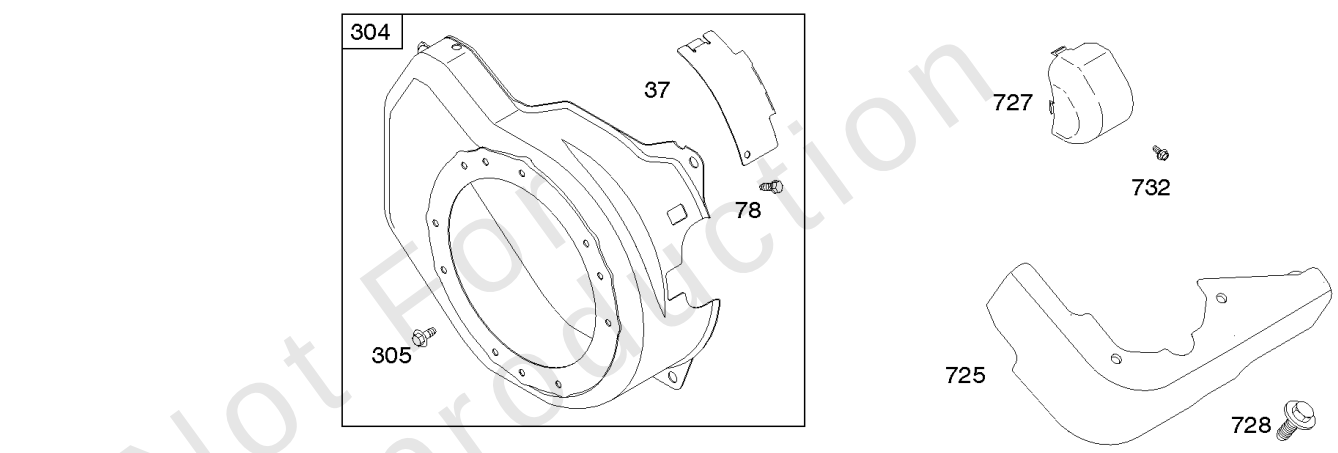

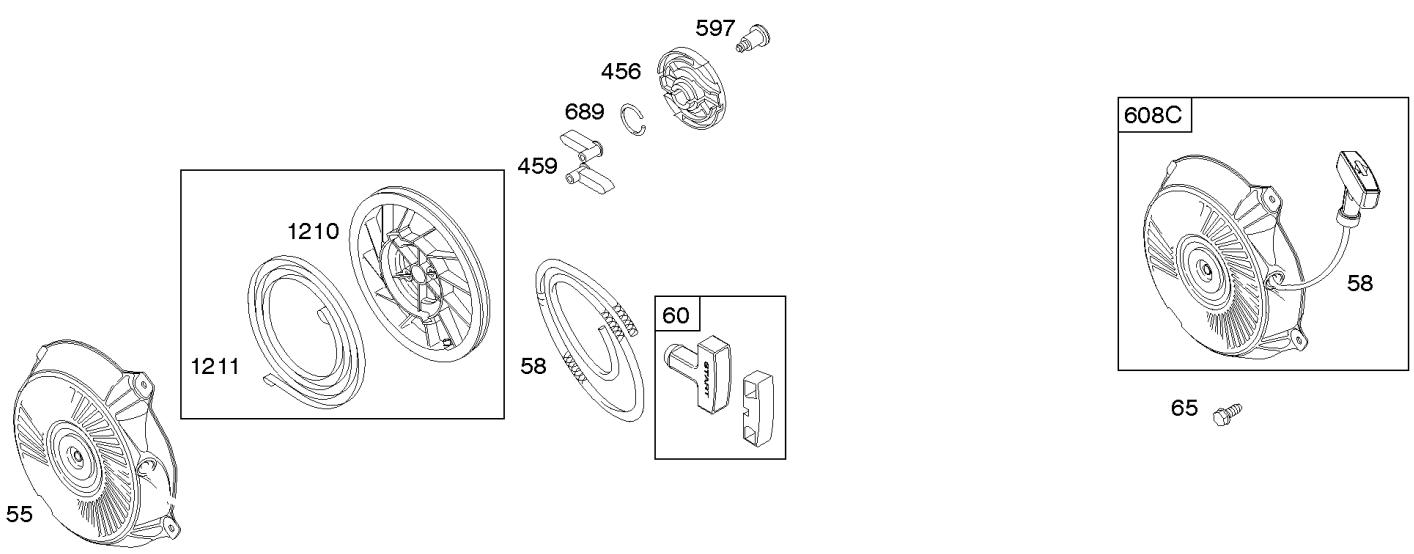

Not For Reproduction

Blower Housing, Electric Starter, Flywheel

REF NO	PART NO	QTY	DESCRIPTION
689	-----		Spring-Friction -(Not Serviced Separate. Service With Rewind Assembly.) -Used After Code Date 11123100
697	795026		SCREW -(Starter Motor) (Drive Cap)
725	792874		SHIELD, Heat
727	698039		COVER-STARTER DRIVE
728	699491		SCREW -(Heat Shield)
732	699200		SCREW -(Starter Drive Cover)
783	692353		GEAR-PINION
797	691029		NUT -(Brush Retainer)
801	694482		CAP-DRIVE
802	691286		CAP, End
1005A	794273		FAN, Flywheel
1051	691265		RING, Retaining
1070	699201		SCREW -(Flywheel Fan)
1090	691293		RETAINER, Brush
1210	-----		Pulley/Spring Assembly -(Pulley) (Not Serviced Separate. Service With Rewind Assembly.) -Used After Code Date 11123100
1210	498144		PULLEY/SPRING ASSY -(Pulley) (Rewind Starter Parts Used With 3MM Diameter Starter Rope) -Used Before Code Date 08030300
1210	791849		PULLEY/SPRING ASSEMBLY -(Pulley) -Used After Code Date 08030200 -Used Before Code Date 12010100
1211	498144		PULLEY/SPRING ASSY -(Spring) (Rewind Starter Parts Used With 3MM Diameter Starter Rope) -Used Before Code Date 08030300
1211	791849		PULLEY/SPRING ASSEMBLY -(Spring) -Used After Code Date 08030200 -Used Before Code Date 12010100
1211	-----		Pulley/Spring Assembly -(Spring) (Not Serviced Separate. Service With Rewind Assembly.) -Used After Code Date 11123100

Not For Reproduction

Copyright © Briggs & Stratton. All Rights reserved

Camshaft, Crankshaft, Cylinder, Piston Group

Mfg. No: 150217-0130-B8

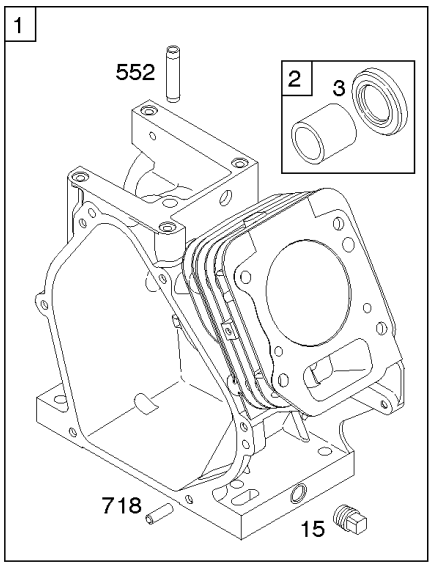

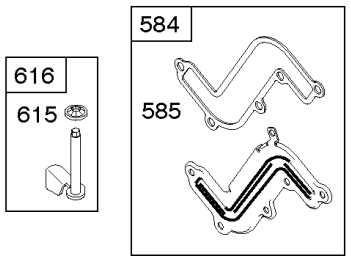

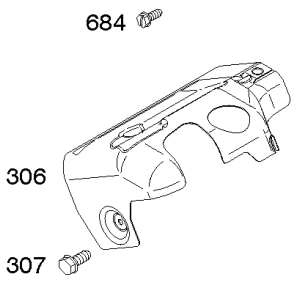

1319 WARNING LABEL

REQUIRED *when replacing parts with warning labels affixed.*

1319A WARNING LABEL

REQUIRED *when replacing parts with warning labels affixed.*

1330 REPAIR MANUAL

1036 EMISSIONS LABEL

1019 LABEL KIT

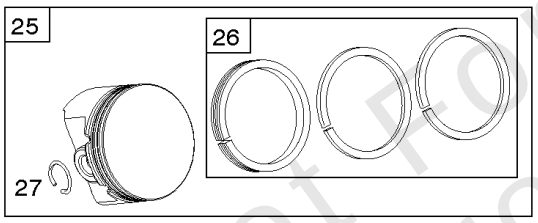

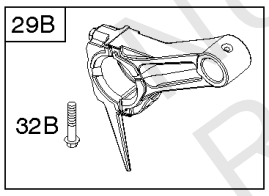

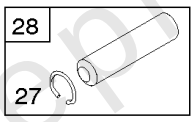

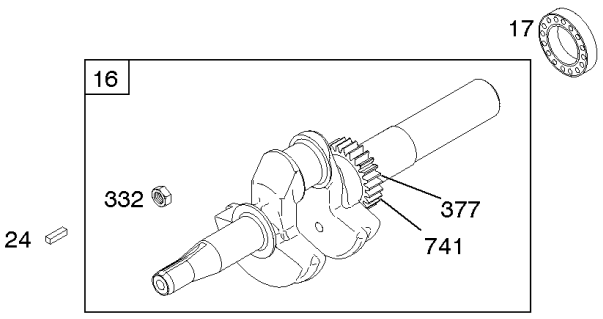

358B ENGINE GASKET SET

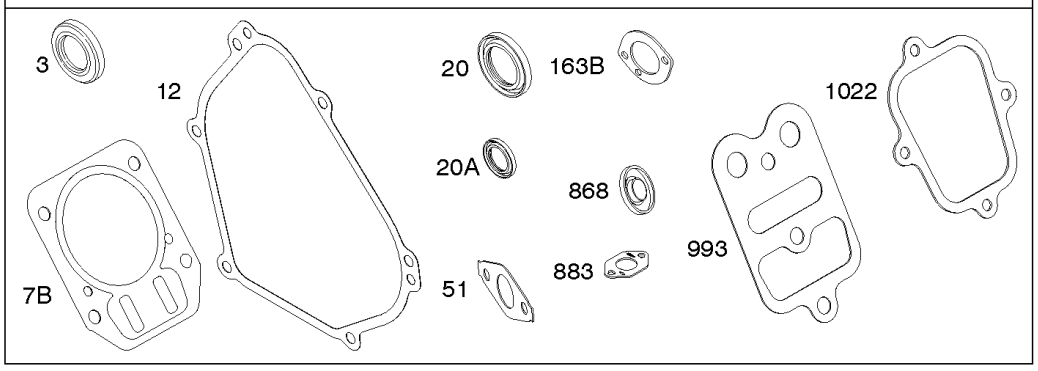

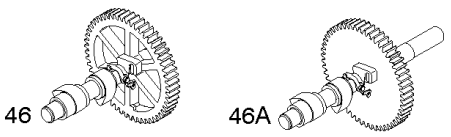

Not For Reproduction

Camshaft, Crankshaft, Cylinder, Piston Group

REF NO	PART NO	QTY	DESCRIPTION
1	794188		CYLINDER ASSEMBLY
2	796961		KIT, Bushing/Seal -(Magneto Side)
3	299819S		SEAL, Oil -(Magneto Side)
7B	791716		GASKET, Cylinder Head
12	699485		GASKET, Crankcase
15	691686		PLUG-OIL DRAIN -(Square Head)(1/4" Diameter)
15A	691682		PLUG-OIL DRAIN -(Hex Socket)(1/4 Diameter)
16	797075		CRANKSHAFT
17	798538		BEARING, Ball
20	692550		SEAL-OIL -(PTO Side)
20A	691952		SEAL, Oil -(PTO Side)
24	796335		KEY, Flywheel
25	791786		PISTON ASSEMBLY -(Standard)
25	791791		PISTON ASSEMBLY -(.020 Oversize)
26	791792		SET, Ring -(.020" Oversize)
26	791787		SET, Ring -(Standard)
27	690975		LOCK, Piston Pin
28	690229		PIN, Piston -(Standard)
29B	791783		ROD, Connecting
32B	791784		SCREW -(Connecting Rod)
46	693404		CAMSHAFT
46A	695285		CAMSHAFT
51	692555		GASKET, Intake -(2 Required)
163B	696024		GASKET, Air Cleaner -(Flat Panel Air Cleaner)
306	594516		SHIELD, Cylinder
307	794822		SCREW -(Cylinder Shield)
332	591988		NUT -(Flywheel)
358B	791797		GASKET SET, Engine
377	690979		KEY, Woodruff
552	692346		BUSHING, Governor Crank
584	791759		COVER, Breather Passage
585	791760		GASKET, Breather Passage
615	692576		RETAINER, Governor Shaft
616	692547		CRANK, Governor
684	793369		SCREW -(Breather Passage Cover)
718	592860		PIN, Locating
741	695087		GEAR, Timing -(Metal)
741	593499		GEAR, Timing -(Plastic)

Not For Reproduction

Copyright © Briggs & Stratton. All Rights reserved

Camshaft, Crankshaft, Cylinder, Piston Group

Mfg. No: 150217-0130-B8

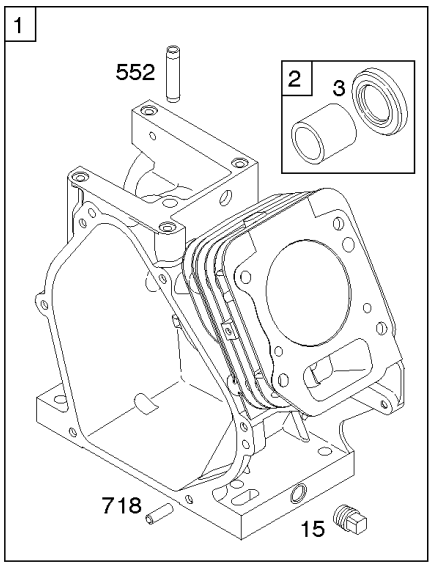

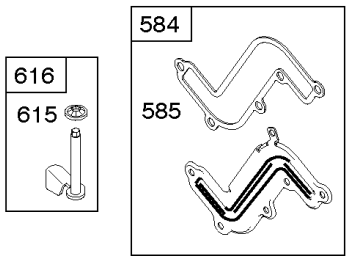

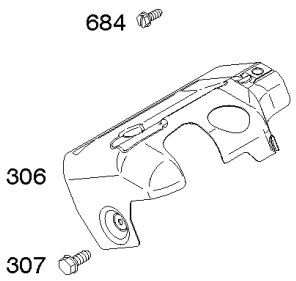

1319 WARNING LABEL

REQUIRED *when replacing parts with warning labels affixed.*

1319A WARNING LABEL

REQUIRED *when replacing parts with warning labels affixed.*

1330 REPAIR MANUAL

1036 EMISSIONS LABEL

1019 LABEL KIT

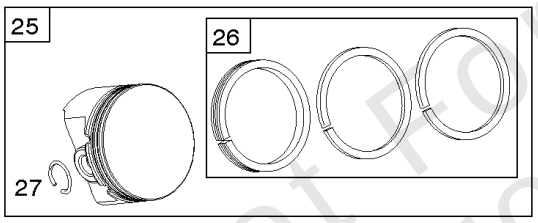

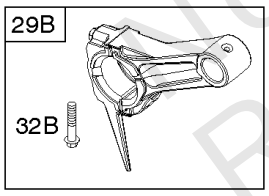

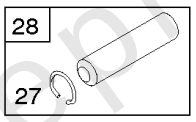

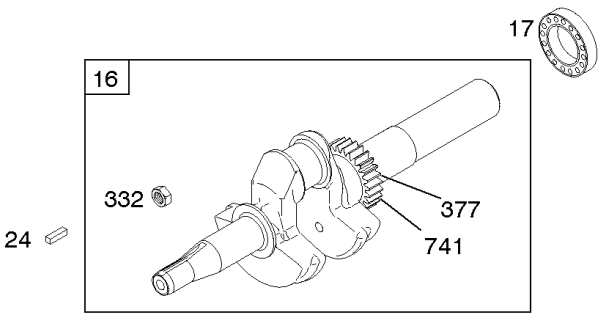

358B ENGINE GASKET SET

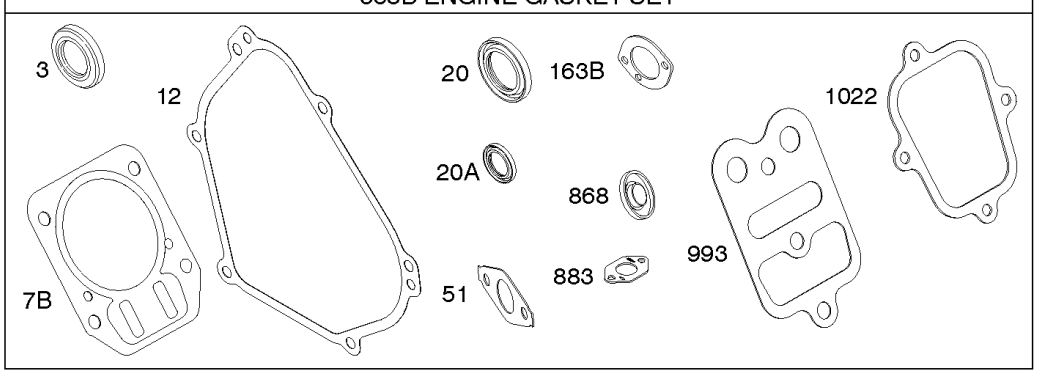

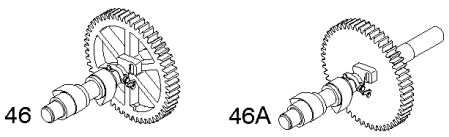

Not For Reproduction

REF NO	PART NO	QTY	DESCRIPTION
868	795440		SEAL-VALVE
883	691893		GASKET-EXHAUST -Used Before Code Date 14090100
883	798516		GASKET, Exhaust -Used After Code Date 14083100
993	694088		GASKET, Cylinder Head Plate
1019	792211		KIT, Label
1022	691890		GASKET-ROCKER COVER
1036	-----		Label-Emissions -(Available From A Briggs & Stratton Authorized Dealer)
1319	794467		LABEL, Warning
1319A	797669		LABEL, Warning
1330	272147		MANUAL, Repair

Not For Reproduction

Copyright © Briggs & Stratton. All Rights reserved

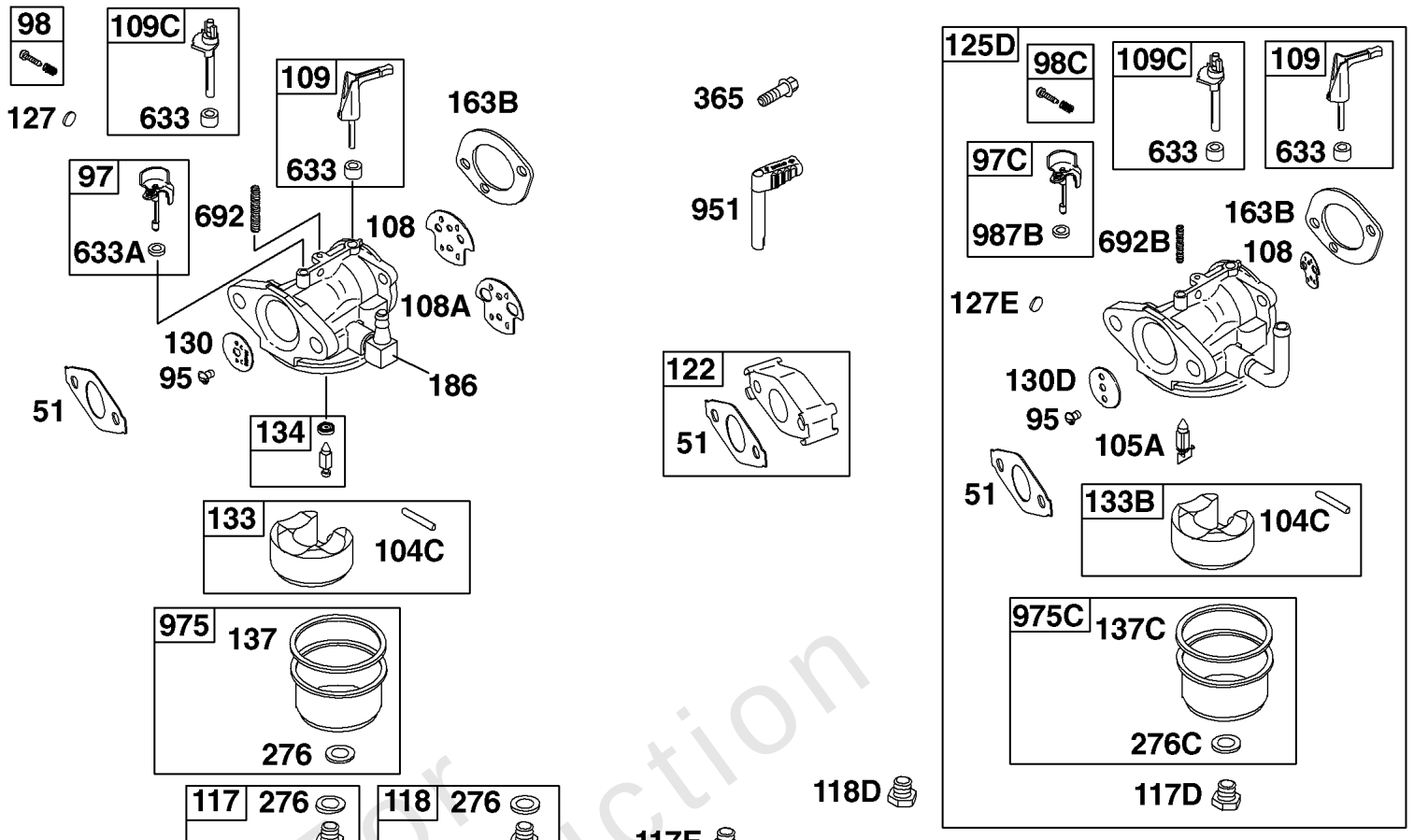

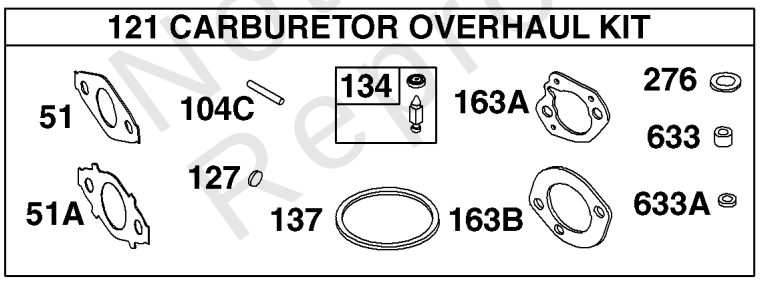

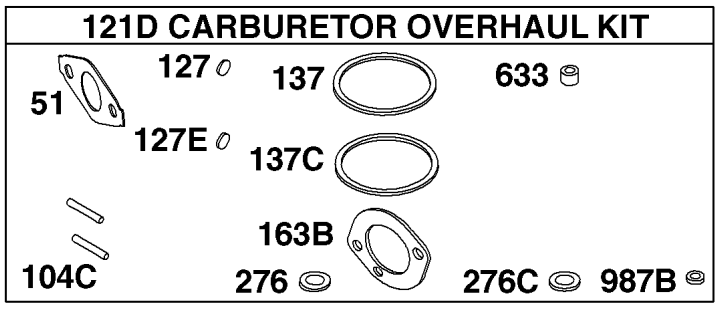

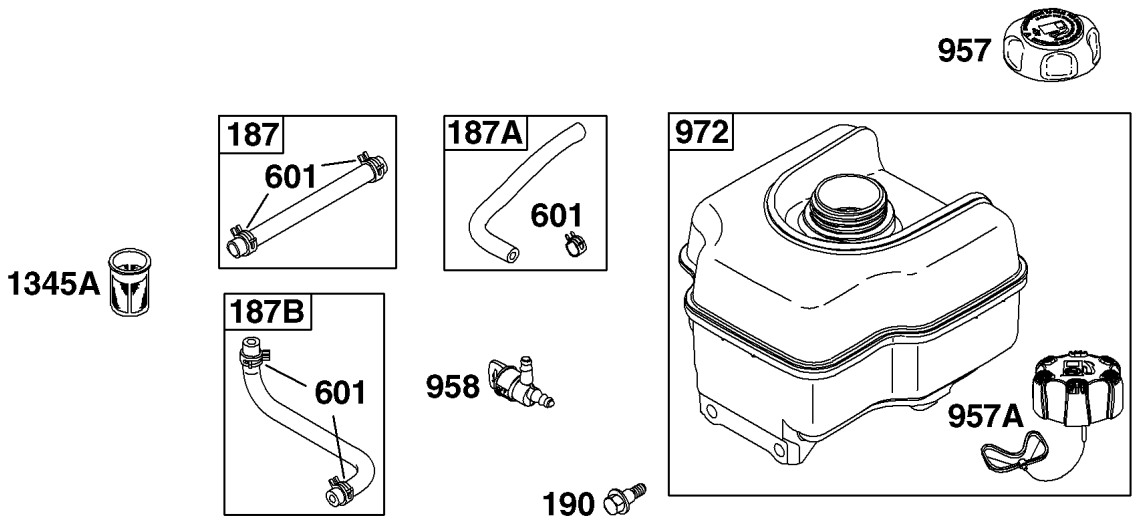

Not For Reproduction

Carburetor, Fuel Supply

REF NO	PART NO	QTY	DESCRIPTION
51	692555		GASKET, Intake -(2 Required)
51A	791718		GASKET, Intake
95	691636		SCREW -(Throttle Valve)
97	690024		SHAFT, Throttle
97C	797628		SHAFT, Throttle
98	398185		KIT-IDLE SPEED -(Carburetor)
98C	797156		KIT, Idle Speed
104C	797622		PIN, Float Hinge
105A	797139		VALVE, Float Needle
108	692567		VALVE-CHOKE
108A	796993		VALVE, Choke
109	690023		SHAFT, Choke
109C	790624		SHAFT, Choke
117	690048		JET, Main -(Standard)
117D	798652		JET, Main -(Standard)
118	497315		JET, Main -(High Altitude)
118D	799178		JET, Main -(High Altitude)
121	792006		KIT, Carburetor Overhaul
121D	797634		KIT, Carburetor Overhaul
122	791717		SPACER, Carburetor
125D	798654		CARBURETOR
127	691739		PLUG-WELCH
127E	797633		PLUG, Welch
130	691181		VALVE-THROTTLE
130D	797630		VALVE, Throttle
133	398187		FLOAT-CARBURETOR
133B	797136		FLOAT, Carburetor
134	398188		KIT-NEEDLE/SEAT
137	693981		GASKET-FLOAT BOWL
137C	797625		GASKET, Float Bowl
163A	792870		GASKET, Air Cleaner -(Air Cleaner)
163B	696024		GASKET, Air Cleaner -(Flat Panel Air Cleaner)
186	692317		CONNECTOR-HOSE
187	791766		LINE, Fuel -(Cut To Required Length)
187A	791867		LINE, Fuel -(Molded)
187B	791874		LINE, Fuel -(Molded)
190	699220		SCREW -(Fuel Tank)
276	271716		WASHER-SEALING
276C	797632		WASHER, Sealing
365	699484		SCREW -(Carburetor)
601	791850		CLAMP, Hose

Not For Reproduction

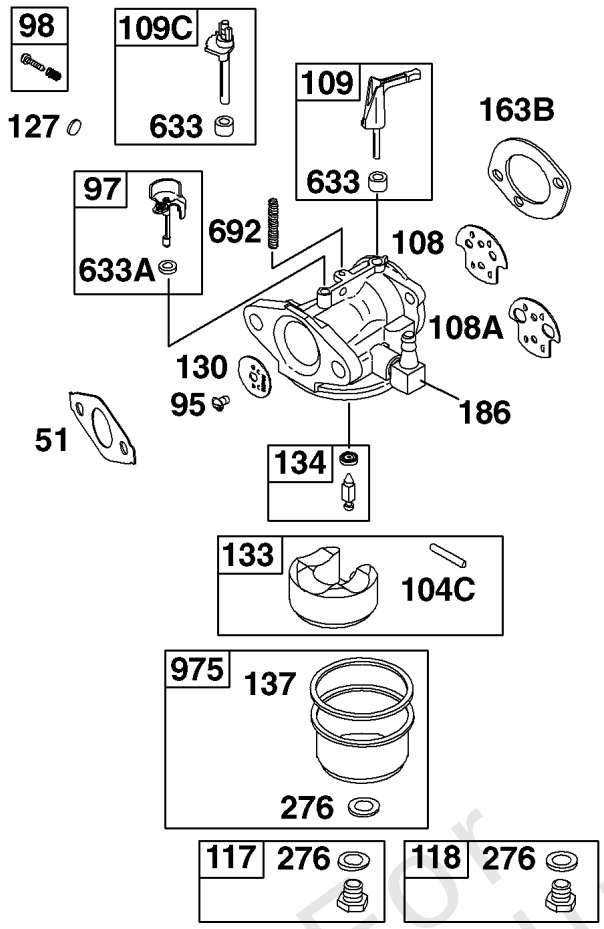

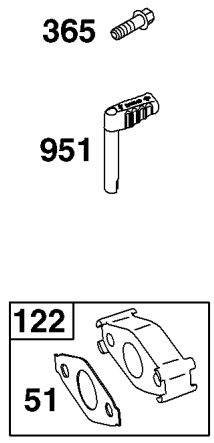

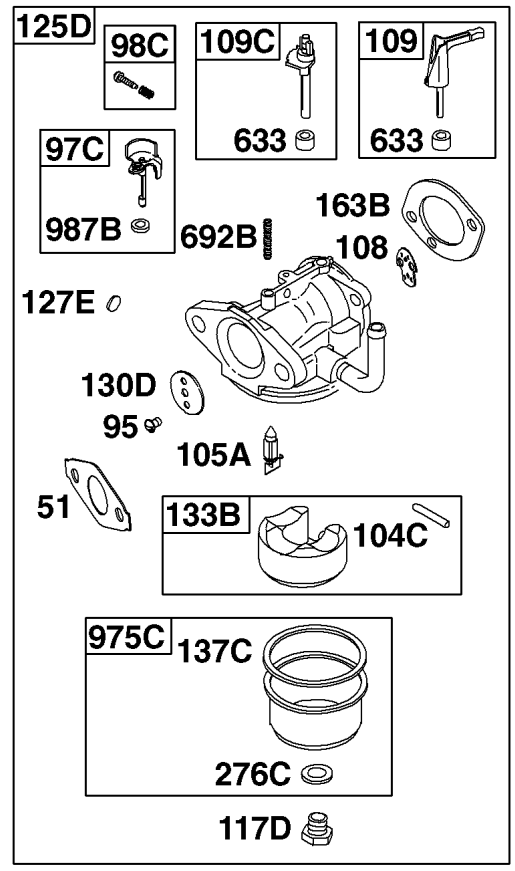

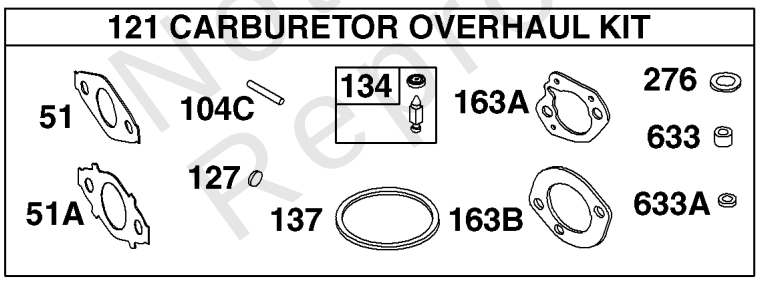

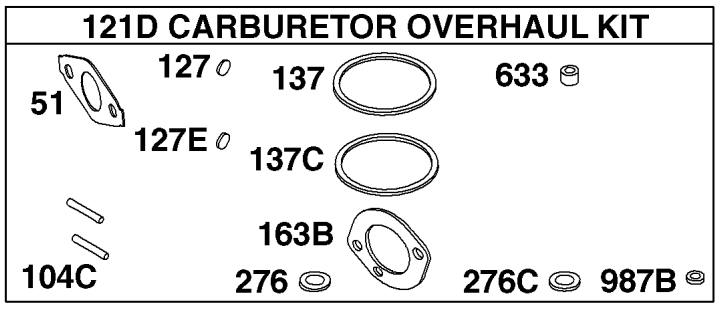

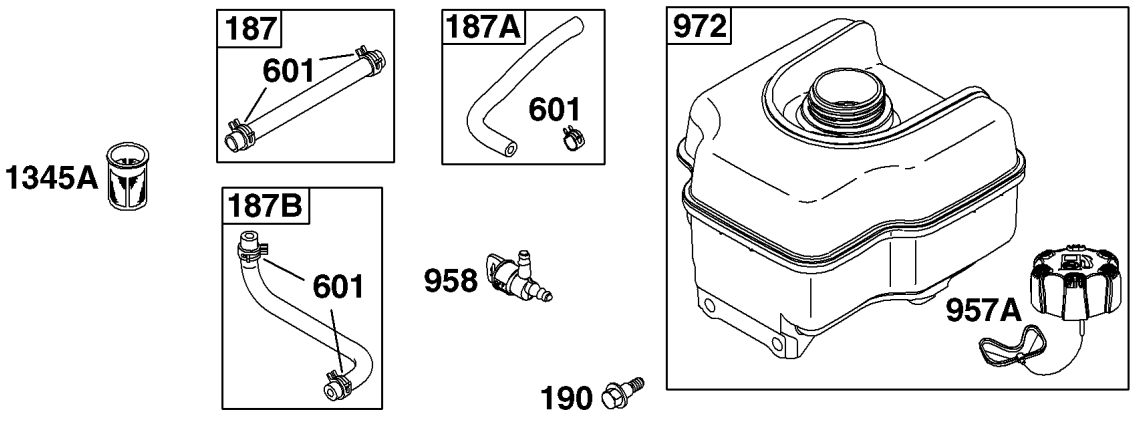

Not For Reproduction

Carburetor, Fuel Supply

REF NO	PART NO	QTY	DESCRIPTION
633	693867		SEAL, Choke/Throttle Shaft
633A	691321		SEAL, Choke/Throttle Shaft -(Throttle Shaft)
692	590931		SPRING, Detent -(Carburetor)
692B	797624		SPRING, Detent
951	790630		LEVER, Choke
957	792647		CAP, Fuel Tank -(Fresh Start)
957	795027		CAP, Fuel Tank -(Text Free)
957A	799719		CAP, Fuel Tank -(Carbon In Cap)
958	698180		VALVE, Fuel Shutoff
972	799863		TANK, Fuel
975	790559		BOWL, Float
975C	797631		BOWL, Float
987B	797629		SEAL, Choke/Throttle Shaft
1345A	792917		FILTER, Filler Neck

Not For Reproduction

Copyright © Briggs & Stratton. All Rights reserved

Controls, Governor Spring, Ignition, Rewind Starter

Mfg. No: 150217-0130-B8

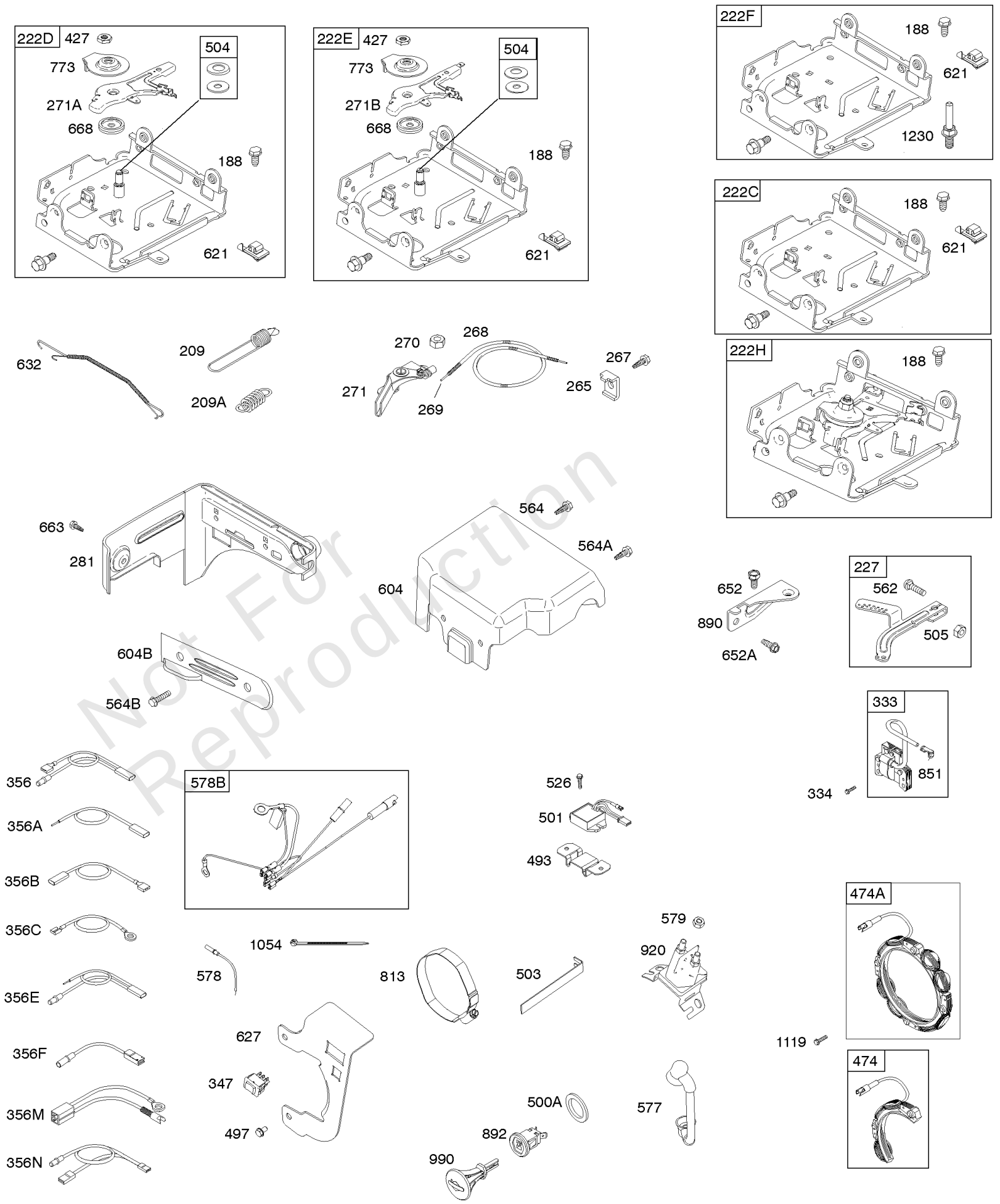

Not For Reproduction

Controls, Governor Spring, Ignition, Rewind Starter

REF NO	PART NO	QTY	DESCRIPTION
188	699479		SCREW -(Control Bracket)
209	693206		SPRING, Governor
222C	795668		BRACKET, Control -(Used With Metal Fuel Tanks) -Used After Code Date 08051100
222D	795669		BRACKET, Control -(Used With Metal Fuel Tanks) -Used After Code Date 08051100
222H	794365		BRACKET, Control
222F	793100		BRACKET, Control -(Used With Plastic Fuel Tanks)
222F	793100		BRACKET, Control -(Used With Metal Fuel Tanks) -Used Before Code Date 08051200
222D	793107		BRACKET, Control -(Used With Plastic Fuel Tanks)
222D	793107		BRACKET, Control -(Used With Metal Fuel Tanks) -Used Before Code Date 08051200
222E	793108		BRACKET, Control
227	794367		LEVER, Governor Control
265	691024		CLAMP, Casing
267	699492		SCREW -(Casing Clamp)
268	691025		CASING, Control Wire -(Cut To Required Length)
269	691026		WIRE, Control -(Cut To Required Length)
270	691027		NUT -(Control Wire Casing)
271	691028		LEVER, Control
271A	694256		LEVER, Control
271B	695743		LEVER, Control
281	793122		PANEL, Control
333	591101		ARMATURE, Magneto
334	699477		SCREW -(Magneto Armature)
347	790949		SWITCH, Rocker
356	693651		WIRE, Stop
356A	692390		WIRE, Stop
356E	695814		WIRE, Stop
356F	697397		WIRE, Stop
356M	792609		WIRE, Stop
356N	593999		WIRE, Stop
356B	692602		WIRE-STOP
356C	695630		WIRE, Stop
427	798458		NUT -(Control Bracket) (Metric)
427	694255		NUT -(Control Bracket) (SAE)
474	695730		ALTERNATOR
474A	793640		ALTERNATOR
493	691177		BRACKET, Mounting
497	691693		SCREW -(Stopswitch Bracket)
500A	792613		WASHER -(Key Switch)

Not For Reproduction

Copyright © Briggs & Stratton. All Rights reserved

Controls, Governor Spring, Ignition, Rewind Starter

Mfg. No: 150217-0130-B8

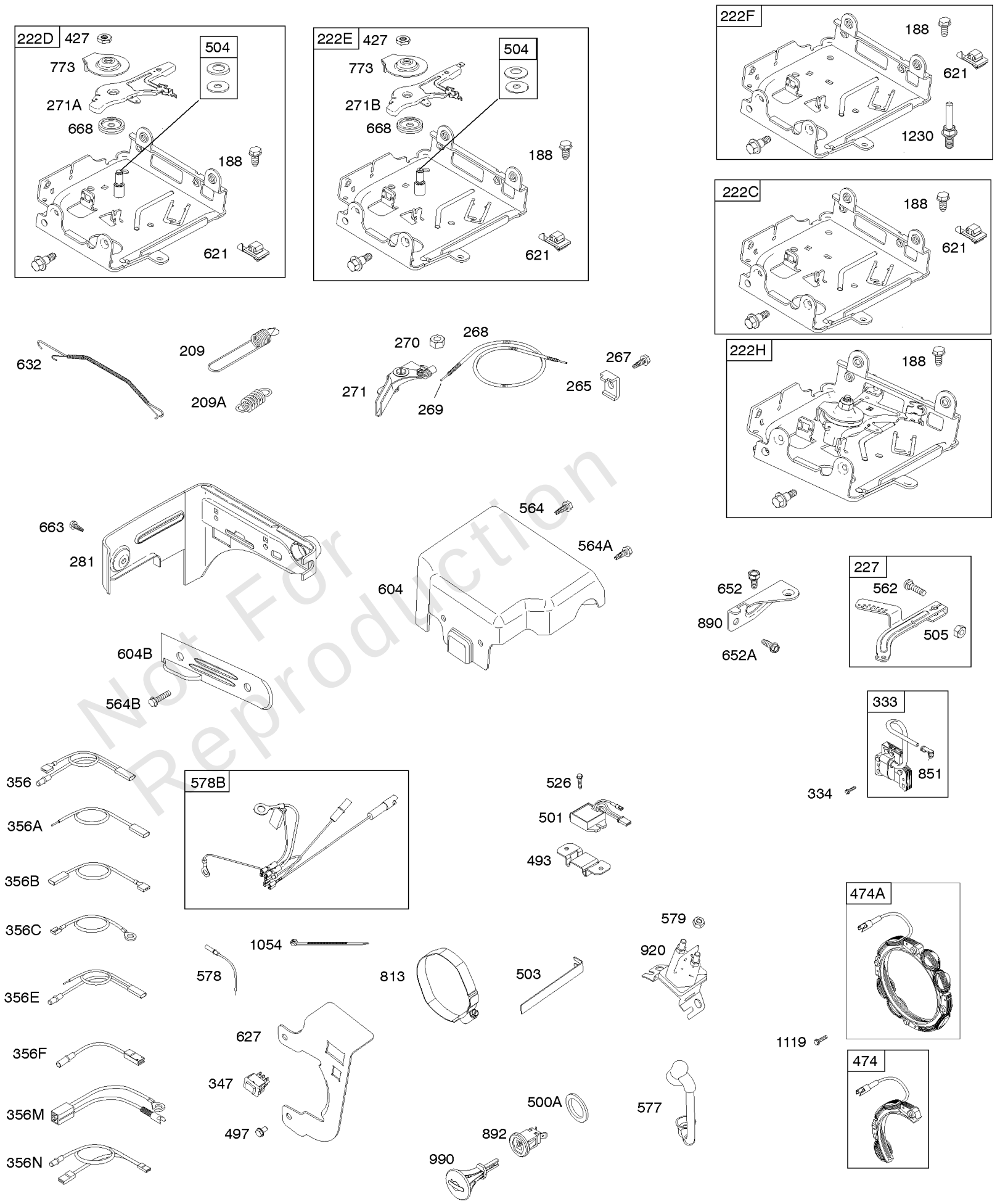

Not For Reproduction

Copyright © Briggs & Stratton. All Rights reserved

Controls, Governor Spring, Ignition, Rewind Starter

REF NO	PART NO	QTY	DESCRIPTION
501	794360		REGULATOR
503	691532		STRAP, Starter
504	695383		SET, Friction Washer
505	691251		NUT -(Governor Control Lever)
526	690326		SCREW -(Regulator)
562	691119		BOLT -(Governor Control Lever)
564	699491		SCREW -(Control Cover)
564A	699206		SCREW -(Control Cover)
564B	699854		SCREW -(Control Cover)
577	690795		CABLE, Starter
578	692306		WIRE ASSEMBLY
578B	790948		WIRE ASSEMBLY
579	691029		NUT -(Starter Cable)
604	697326		COVER-CONTROL
604B	790473		COVER, Control
621	692310		SWITCH, Stop
627	792608		BRACKET, Stopswitch
632	693408		SPRING/LINK, Mechanical Governor
652	699755		SCREW -(Support Bracket)
652A	699481		SCREW -(Support Bracket)
663	699206		SCREW -(Control Panel)
668	694257		SPACER
773	694258		RETAINER
813	690635		CLAMP
851	493880S		TERMINAL, Spark Plug
890	790203		BRACKET, Support
892	791944		SWITCH, Key
920	691656		SOLENOID, Starter
990	794696		KEY SET
1054	280275		TIE, Cable
1119	699772		SCREW -(Alternator)
1230	699847		STUD -(Control Bracket)

Not For Reproduction

Copyright © Briggs & Stratton. All Rights reserved

Crankcase Cover, Lubrication

Mfg. No: 150217-0130-B8

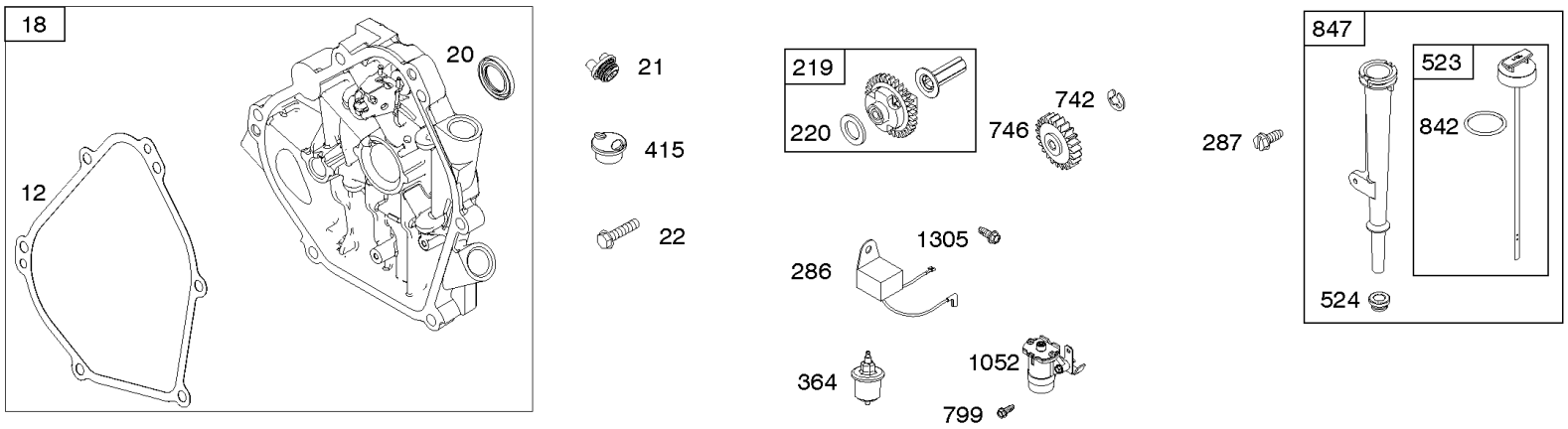

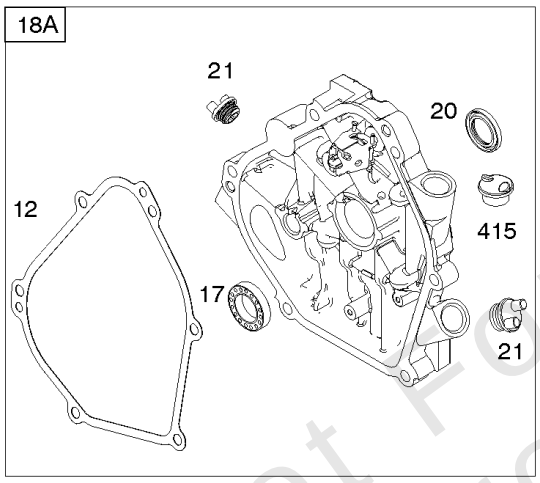

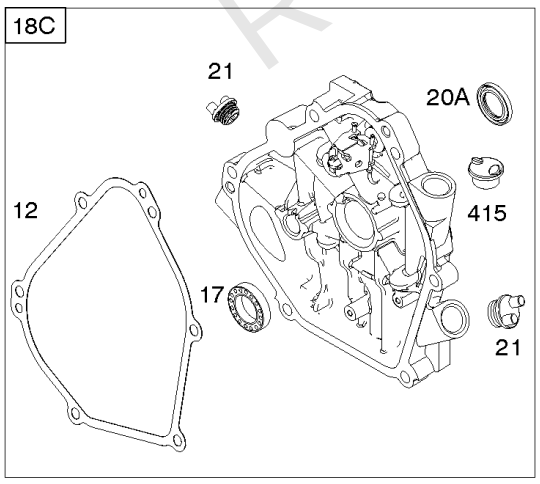

Not For Reproduction

Crankcase Cover, Lubrication

REF NO	PART NO	QTY	DESCRIPTION
12	699485		GASKET, Crankcase
17	798538		BEARING, Ball
18	699804		COVER, Crankcase
20	692550		SEAL-OIL -(PTO Side)
20A	691952		SEAL, Oil -(PTO Side)
21	281658S		CAP, Oil Fill
22	594519		SCREW -(Crankcase Cover/Sump)
219	693578		GEAR, Governor
220	691724		WASHER -(Governor Gear)
286	794185		MODULE, Oil Sensor
287	699234		SCREW -(Dipstick Tube)
364	695693		TERMINAL, Oil Plug
415	693463		PLUG -(Crankcase Cover/Sump)
523	693618		DIPSTICK
524	281370S		SEAL, Dipstick Tube -(Dipstick Tube)
742	692564		RETAINER, E Ring -(Idler Gear)
746	790278		GEAR-IDLER
799	699202		SCREW -(Oil Sensor)
842	691031		SEAL, O-Ring -(Dipstick Tube)
847	693617		DIPSTICK/TUBE ASSEMBLY
1052	790141		SENSOR, Oil
1305	699691		SCREW -(Oil Sensor Module)

Not For Reproduction

Copyright © Briggs & Stratton. All Rights reserved

Cylinder Head

Mfg. No: 150217-0130-B8

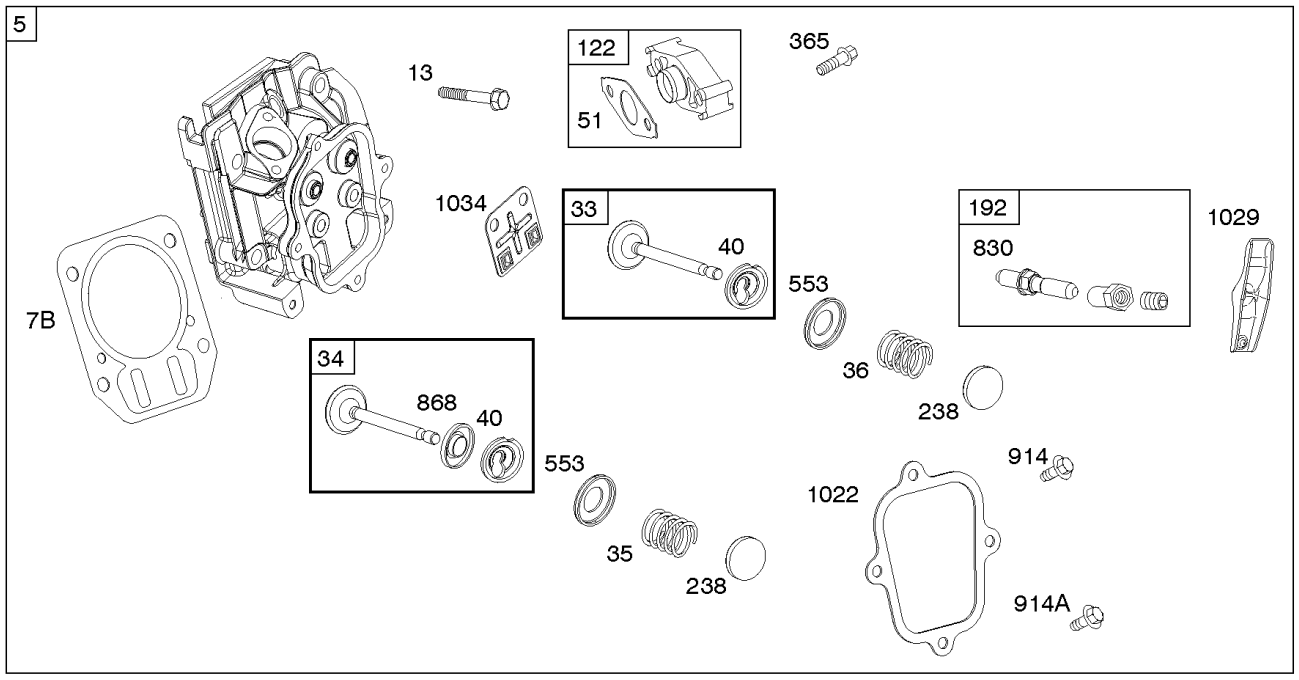

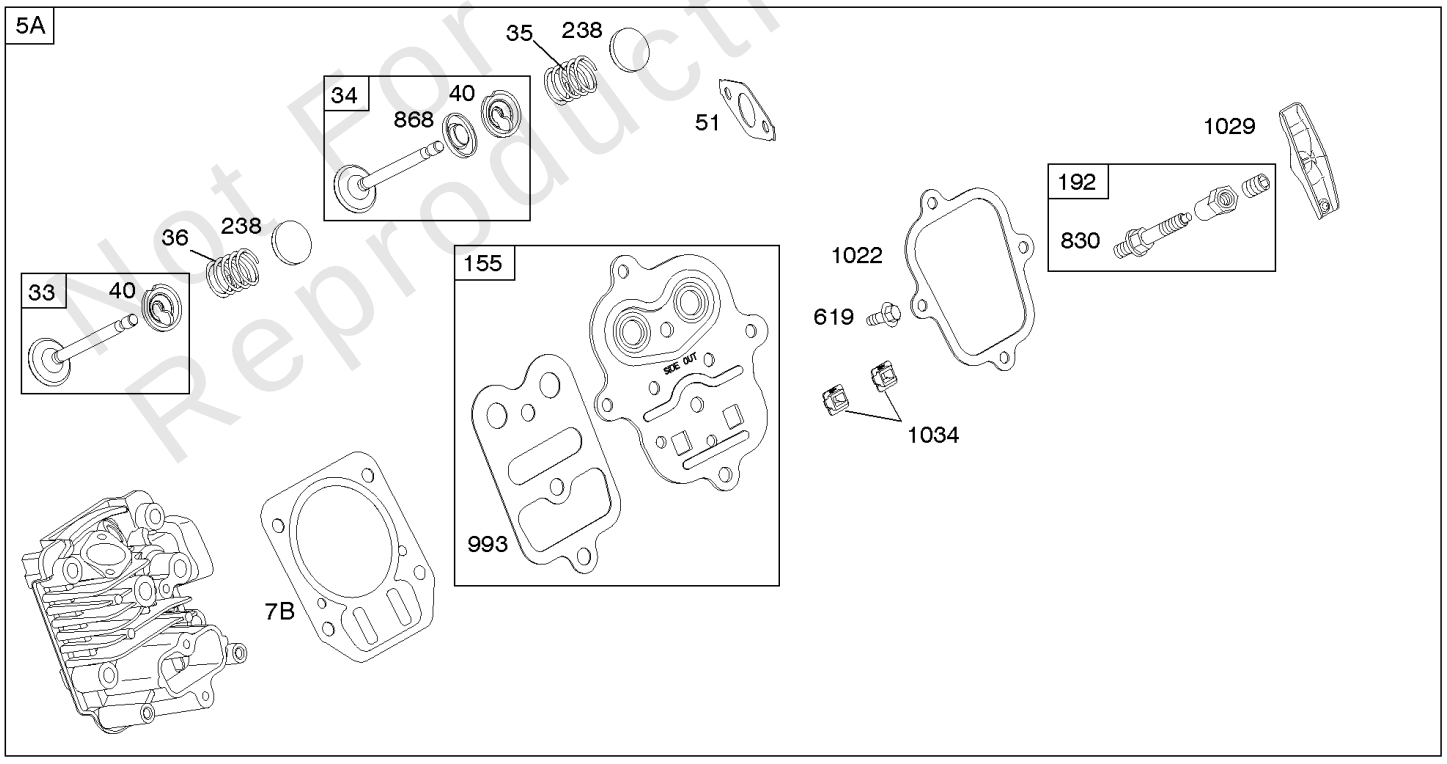

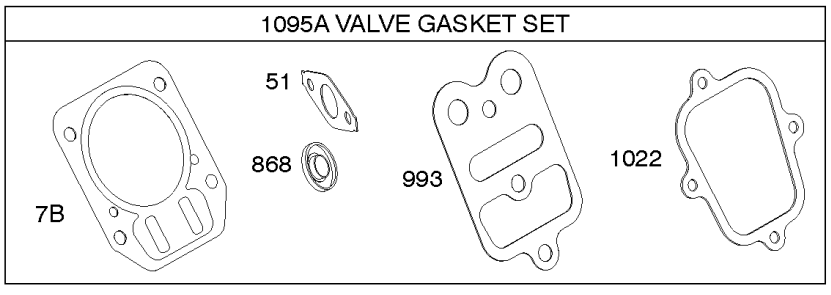

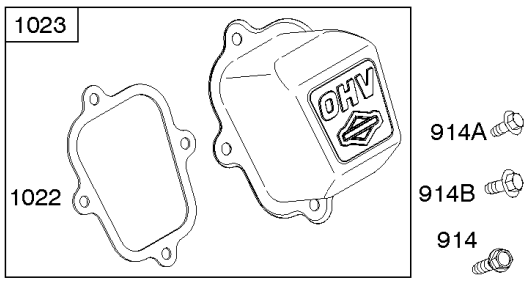

Not For Reproduction

Cylinder Head

REF NO	PART NO	QTY	DESCRIPTION
5	594701		HEAD, Cylinder -Used After Code Date 14090300
5A	791720		HEAD, Cylinder -Used Before Code Date 14090400
7B	791716		GASKET, Cylinder Head
13	699482		SCREW -(Cylinder Head) -Used Before Code Date 14090400
13	594518		SCREW -(Cylinder Head) -Used After Code Date 14090300
33	499642		VALVE, Exhaust
34	795443		VALVE, Intake
35	691304		SPRING, Valve -(Intake)
36	691304		SPRING, Valve -(Exhaust)
40	692194		RETAINER, Valve
45	690977		TAPPET, Valve
51	692555		GASKET, Intake -(2 Required)
122	791717		SPACER, Carburetor
155	698214		PLATE, Cylinder Head -(SAE) -Used Before Code Date 09061800
155	797442		PLATE, Cylinder Head -(Metric) -Used After Code Date 09061700
192	694543		ADJUSTER-ROCKER ARM -(SAE) -Used Before Code Date 09061800
192	594382		ADJUSTER. Rocker Arm -Used After Code Date 14090300
192	797440		ADJUSTER. Rocker Arm -(Metric) -Used After Code Date 09061700 -Used Before Code Date 14090400
238	691300		CAP, Valve
337	491055S		PLUG, Spark
337	84007216		PLUG, SPARK -(China Only)
365	699484		SCREW -(Carburetor)
383	19576S		WRENCH, Spark Plug
553	594515		RETAINER, Valve
619	699481		SCREW -(Cylinder Head Plate)
635	692076		BOOT, Spark Plug
635A	798619		BOOT-SPARK PLUG
830	797441		STUD, Rocker Arm -(Rocker Arm) (Metric) -Used After Code Date 09061700 -Used Before Code Date 14090400
830	694544		STUD-ROCKER ARM -(Rocker Arm) (SAE) -Used Before Code Date 09061800
830	594230		STUD, Rocker Arm -(Rocker Arm) -Used After Code Date 14090300
868	795440		SEAL-VALVE

Not For Reproduction

Copyright © Briggs & Stratton. All Rights reserved

Cylinder Head

Mfg. No: 150217-0130-B8

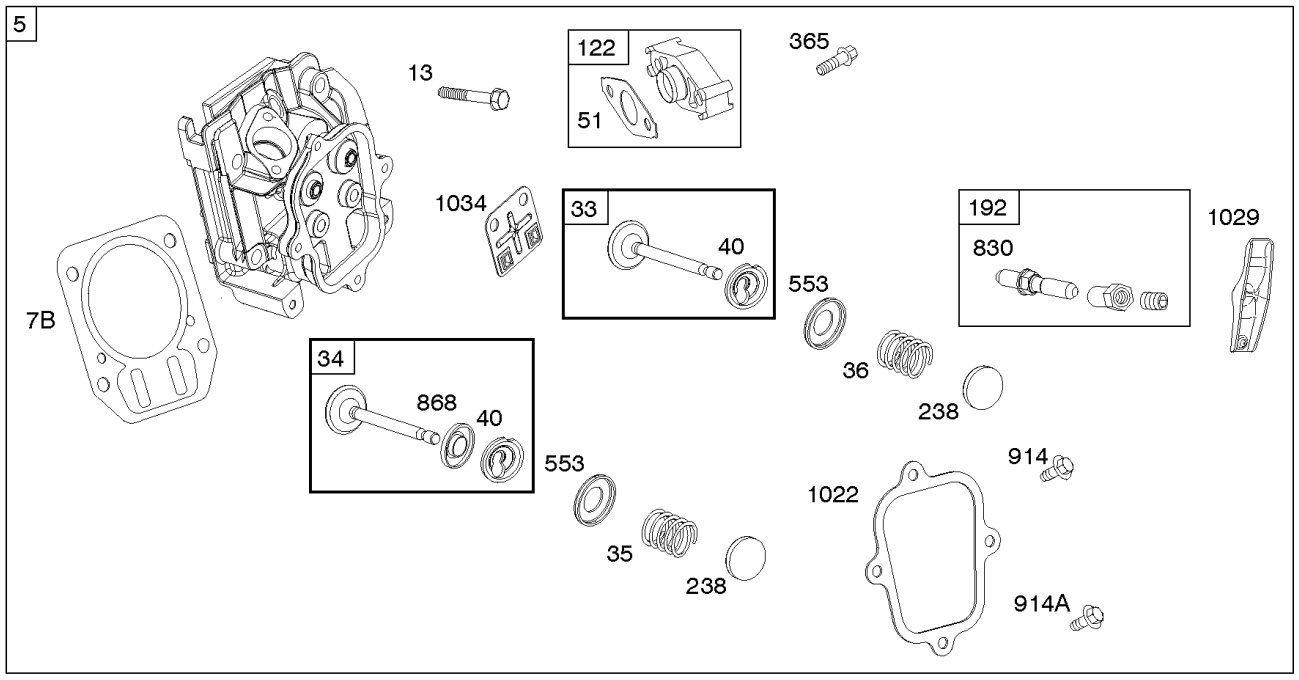

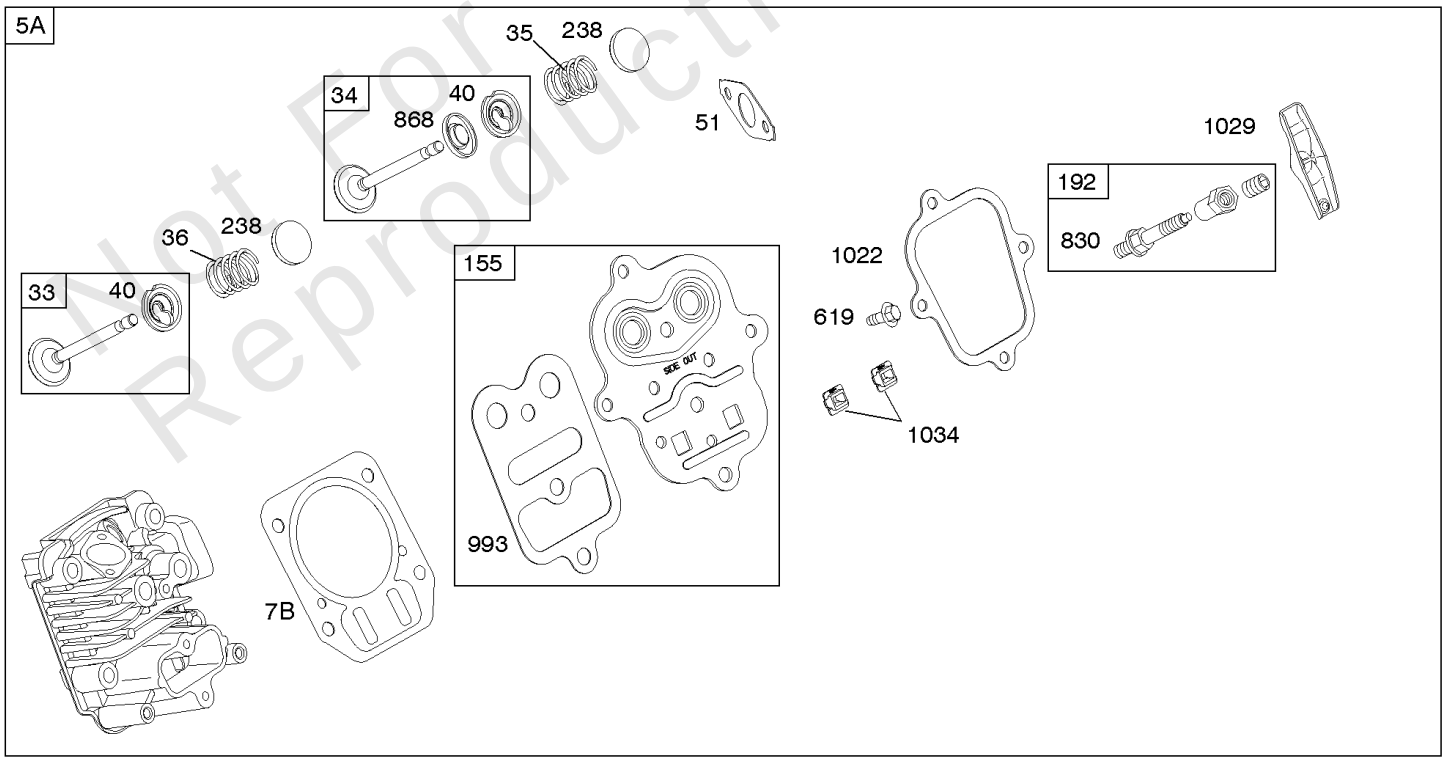

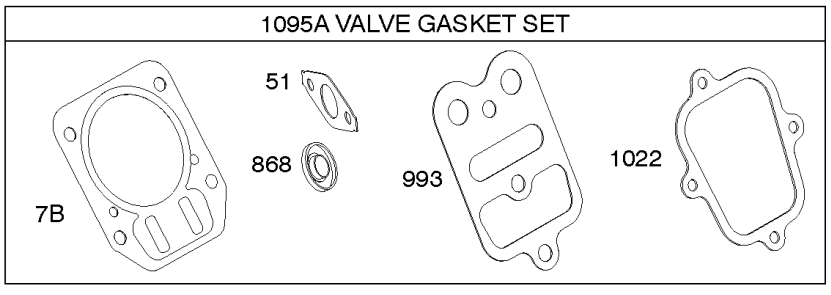

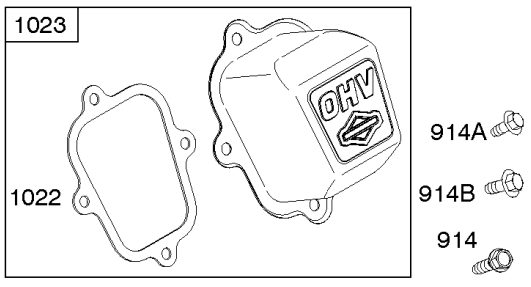

Not For Reproduction

Cylinder Head

REF NO	PART NO	QTY	DESCRIPTION
914	699481		SCREW -(Rocker Cover) (Bottom)
914A	692557		SCREW -(Rocker Cover) (Top) -Used Before Code Date 09061800
914A	594517		SCREW -(Rocker Cover) (Quantity 1 Top Or Center) -Used After Code Date 09061700
914B	691108		SCREW -(Rocker Cover) (Center) -Used Before Code Date 09061800
993	694088		GASKET, Cylinder Head Plate
1022	691890		GASKET-ROCKER COVER
1023	499924		COVER, Rocker
1026	790287		ROD, Push
1029	691230		ARM, Rocker -(SAE) -Used Before Code Date 09061800
1029	797443		ARM, Rocker -(Metric) -Used After Code Date 09061700
1034	594229		GUIDE, Push Rod -Used After Code Date 14090300
1034	691343		GUIDE, Push Rod -Used Before Code Date 14090400
1095A	791798		GASKET SET, Valve

Not For Reproduction

Copyright © Briggs & Stratton. All Rights reserved

Replacement Engine - US & Canada

REF NO	PART NO	QTY	DESCRIPTION
	15T3270050	1	Replacement Engine
	797075	1	CRANKSHAFT -Add Part
	797072	1	CRANKSHAFT -Remove Part
	-----		Top No-Load Speed: 3800 -Trim: ALL
	-----		Service Note: For all Go-Karts use only a Model 136200 series engine as a replacement, regardless of the original Model.
	-----		Service Note: Transfer Muffler and/or Spark Arrester Assembly from the original engine if suitable for additional service or add new parts as required
	-----		Service Note: Transfer Alternator Assembly from original engine to replacement engine.
	-----		Service Note: Transfer Rewind Assembly from original engine to replacement engine.

Not For Reproduction

Copyright © Briggs & Stratton. All Rights reserved

Copyright © Briggs & Stratton. All Rights reserved