Parts Manual

Mfg. No: 117462-0535-E1

Copyright © Briggs & Stratton. All Rights reserved

22-Jun-2026

Model Components

Page

Air Cleaner. 4
Alternator, Flywheel, Ignition. 6
Blower Housing, Control Panel. 8
Camshaft, Crankshaft. 10
Carburetor, Gasket Set - Carburetor, Kit - Carburetor Overhaul. 12
Controls. 14
Crankcase Cover, Valves. 16
Cylinder Head, Gasket Set - Valve, Lubrication. 18
Cylinder, Gasket Set - Engine, Operator's Manual, Piston, Rings, Connecting Rod, Warning Label. 20
Electric Starter. 22
Exhaust System. 24
Fuel Supply. 26
Oil Sensor Group. 28
Replacement Engine - US & Canada. 30
Rewind Starter. 31

Not For Reproduction

Copyright © Briggs & Stratton. All Rights reserved

Mfg. No: 117462-0535-E1

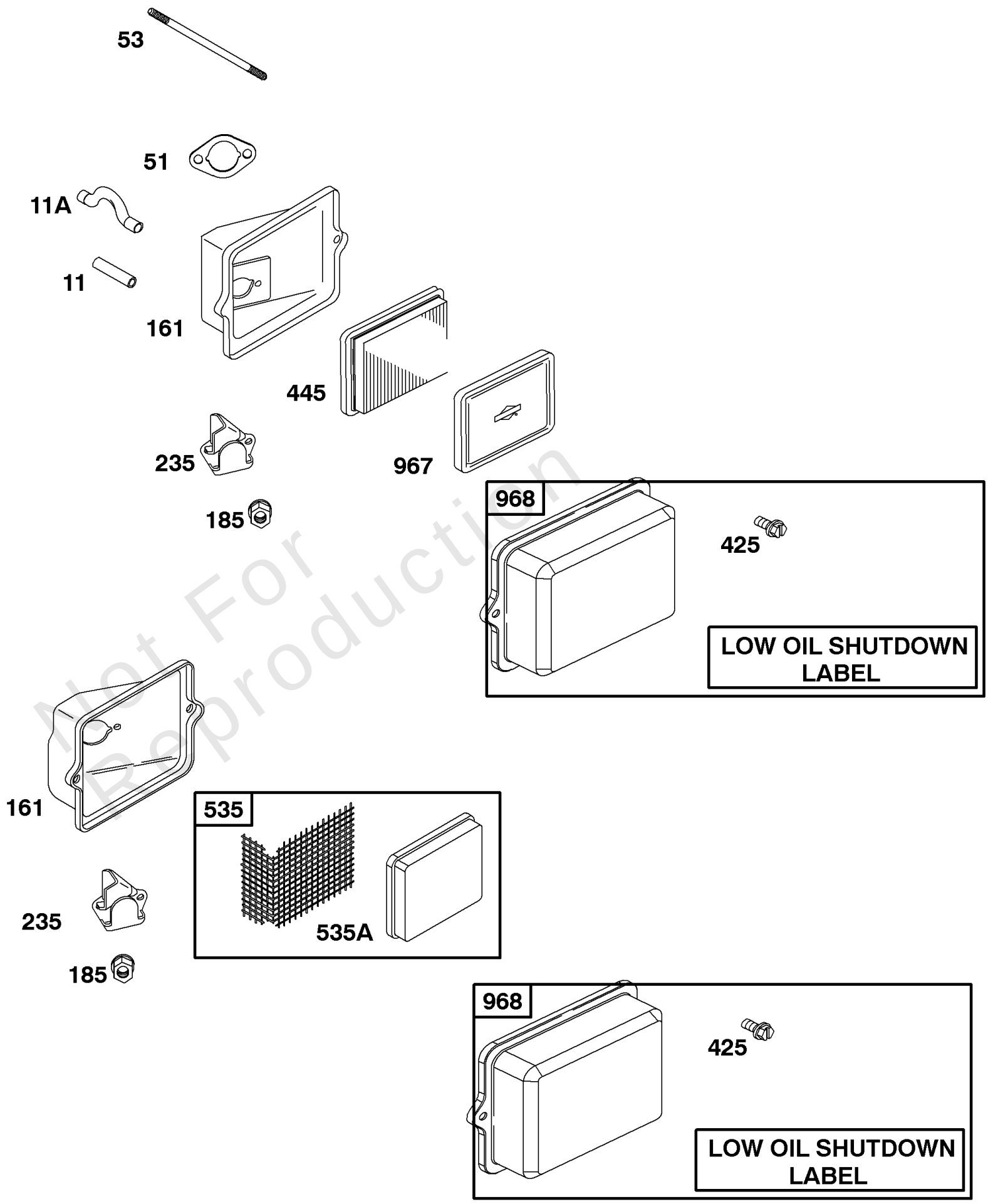

Not For Reproduction

Air Cleaner

REF NO	PART NO	QTY	DESCRIPTION
11	710115		TUBE, Breather
51	710060		GASKET, Intake
53	710116		STUD -(Carburetor)
161	710521		BASE, Air Cleaner -(Metal)
185	710068		LOCKNUT -(Air Cleaner Base)
235	710522		SHIELD, Fuel Spray
425	694515		SCREW -(Air Cleaner Cover)
445	491588S		FILTER, A/C Cartridge
535	715511		FILTER, Air Cleaner Foam
535A	691315		FILTER-A/C FOAM
967	491435S		FILTER, Pre Cleaner
968	692321		COVER, Air Cleaner

Not For Reproduction

Copyright © Briggs & Stratton. All Rights reserved

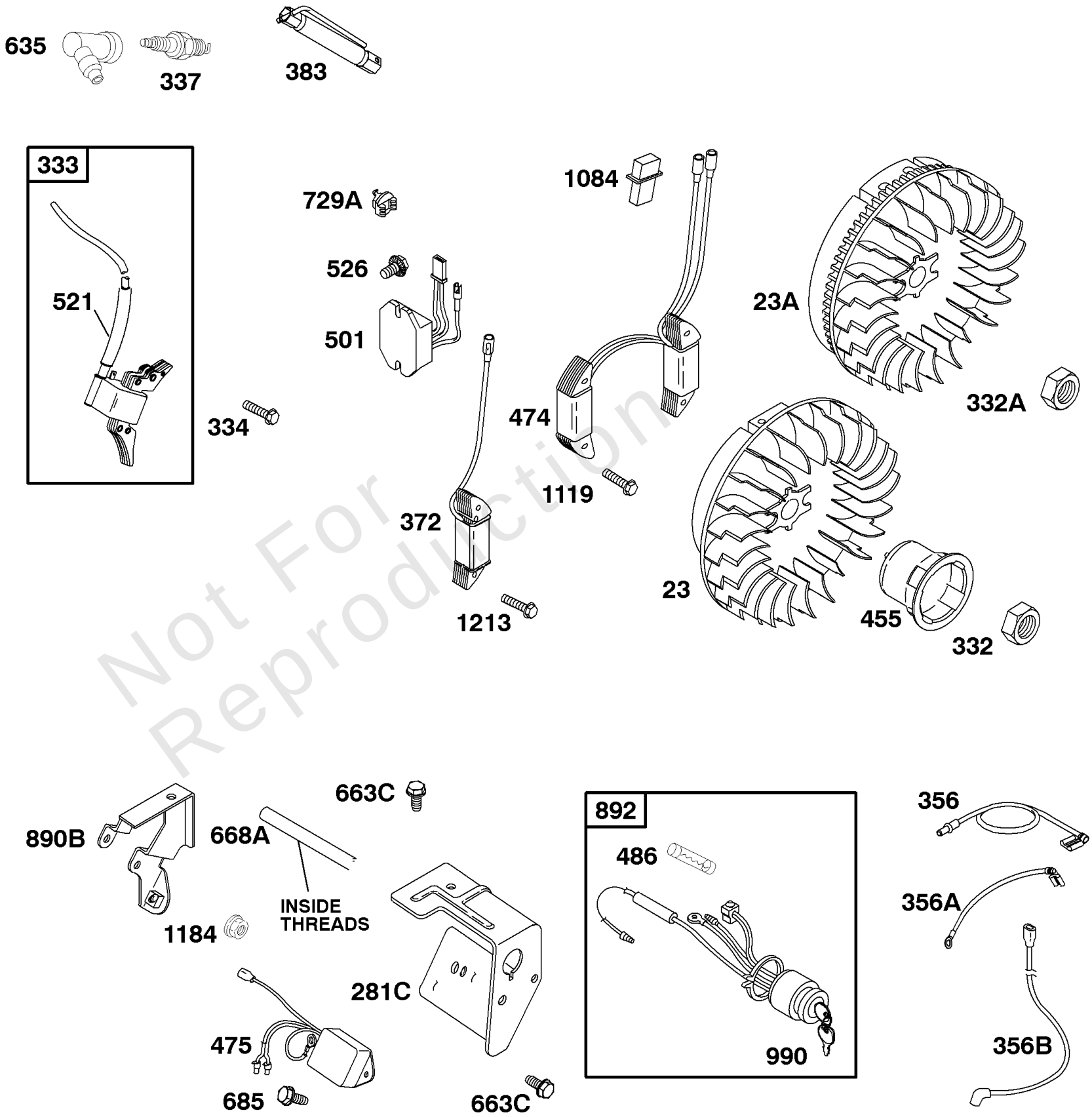

Not For Reproduction

Alternator, Flywheel, Ignition

REF NO	PART NO	QTY	DESCRIPTION
23	710128		FLYWHEEL
281C	710479		PANEL, Control
332	710048		NUT -(Flywheel)
333	715023		ARMATURE, Magneto
334	710047		SCREW -(Magneto Armature)
337	491055S		PLUG, Spark
337	84007216		PLUG, SPARK -(China Only)
356	710120		WIRE, Stop
356A	710087		WIRE, Stop
356B	710324		WIRE, Stop
383	19374S		WRENCH, Spark Plug
455	710366		CUP, Flywheel
475	715200		RECTIFIER
486	712050		FUSE -(5 Amp)
521	710045		SHIELD, Cable
526	710057		SCREW -(Regulator)
635	710634		BOOT, Spark Plug
663C	710074		SCREW -(Control Panel)
668A	710443		SPACER
685	710089		SCREW -(Rectifier)
729A	710046		CLIP, Wire
890B	710441		BRACKET, Support
892	715199		SWITCH, Key
990	712052		SET, Key
1119	710047		SCREW -(Alternator)
1184	710068		LOCKNUT -(Support Bracket)
1213	710047		SCREW -(Lighting Coil)

Not For Reproduction

Copyright © Briggs & Stratton. All Rights reserved

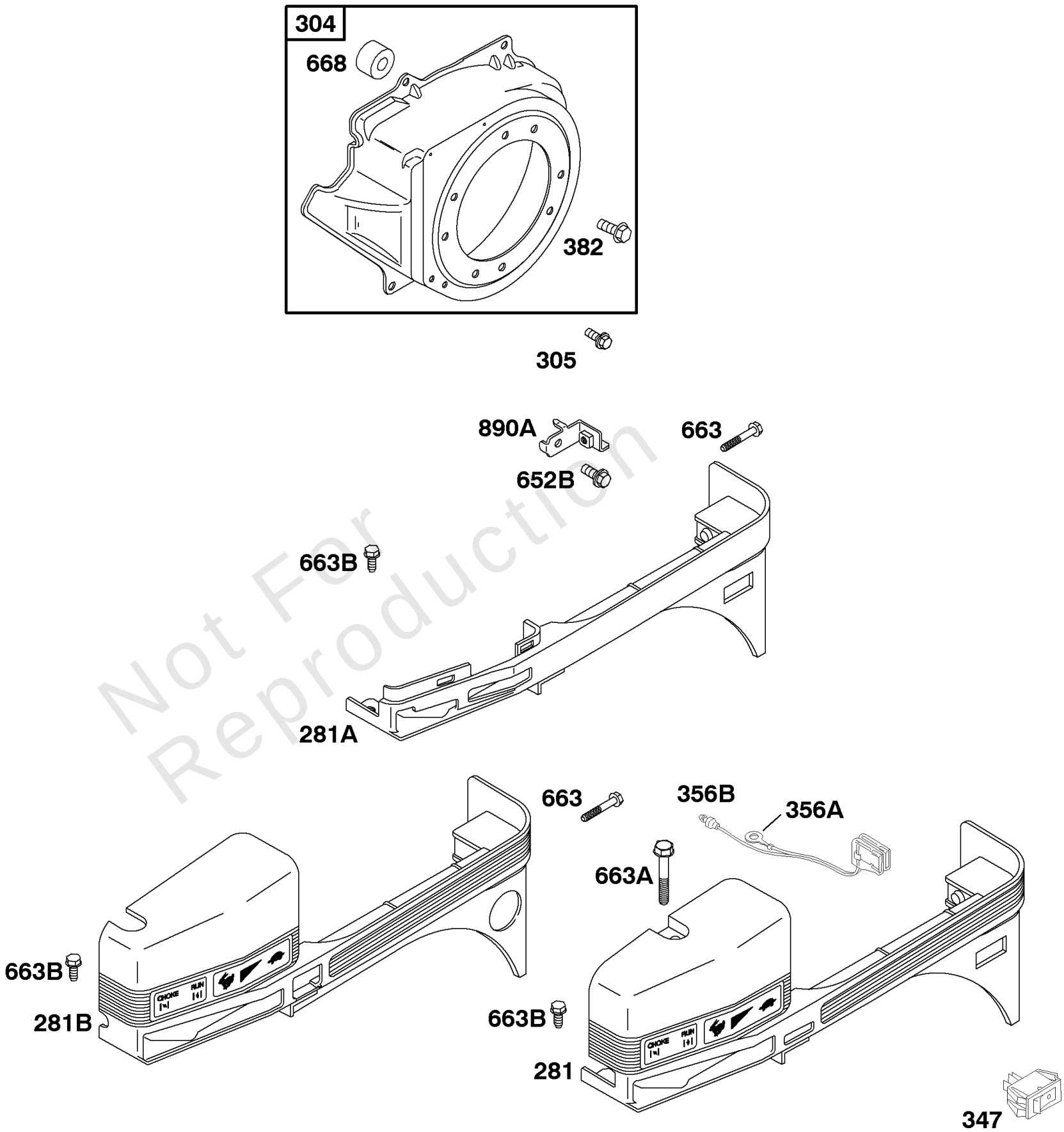

1036 EMISSIONS LABEL

Not For Reproduction

Blower Housing, Control Panel

REF NO	PART NO	QTY	DESCRIPTION
304	715212		HOUSING, Blower
305	710023		SCREW -(Blower Housing)
347	691995		SWITCH-ROCKER
356A	710087		WIRE, Stop
356B	710324		WIRE, Stop
382	710160		SCREW -(Fuel Filter)
652B	710023		SCREW -(Support Bracket)
663	710095		SCREW -(Control Panel)
663A	710096		SCREW -(Control Panel)
663B	710234		SCREW -(Control Panel)
668	710159		SPACER, Fuel Tank
1036	-----		Label-Emissions -(Available From A Briggs & Stratton Authorized Dealer)

Not For Reproduction

Copyright © Briggs & Stratton. All Rights reserved

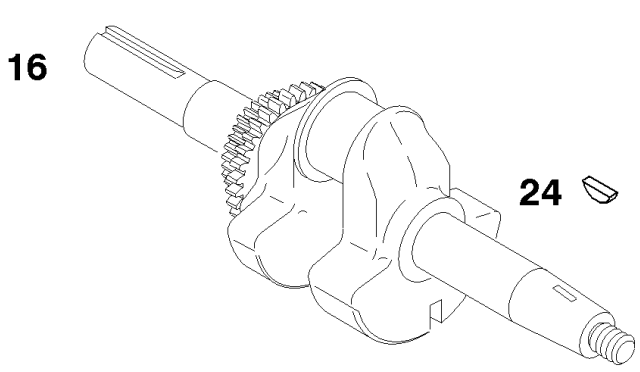

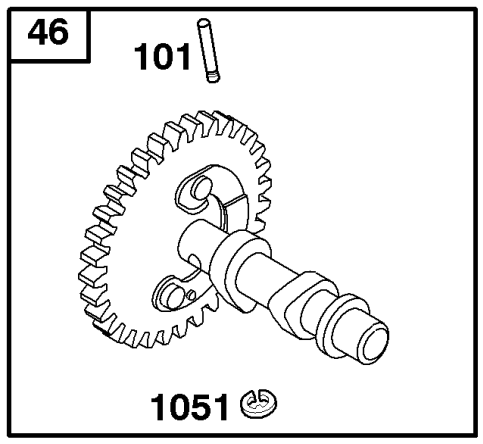

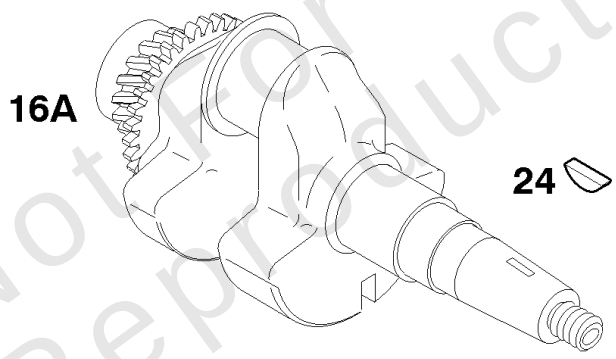

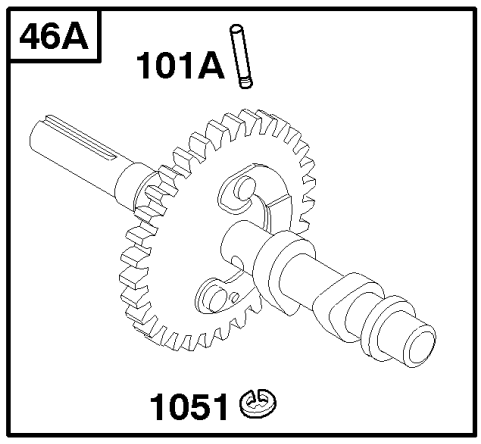

Not For Reproduction

Copyright © Briggs & Stratton. All Rights reserved

Camshaft, Crankshaft

REF NO	PART NO	QTY	DESCRIPTION
16A	715044		CRANKSHAFT -(2:1 Gear Reduction)
24	710037		KEY, Flywheel
46A	715045		CAMSHAFT
101A	710340		PIN, Shaft
1051	710039		RING, Retaining

Not For Reproduction

Copyright © Briggs & Stratton. All Rights reserved

Mfg. No: 117462-0535-E1

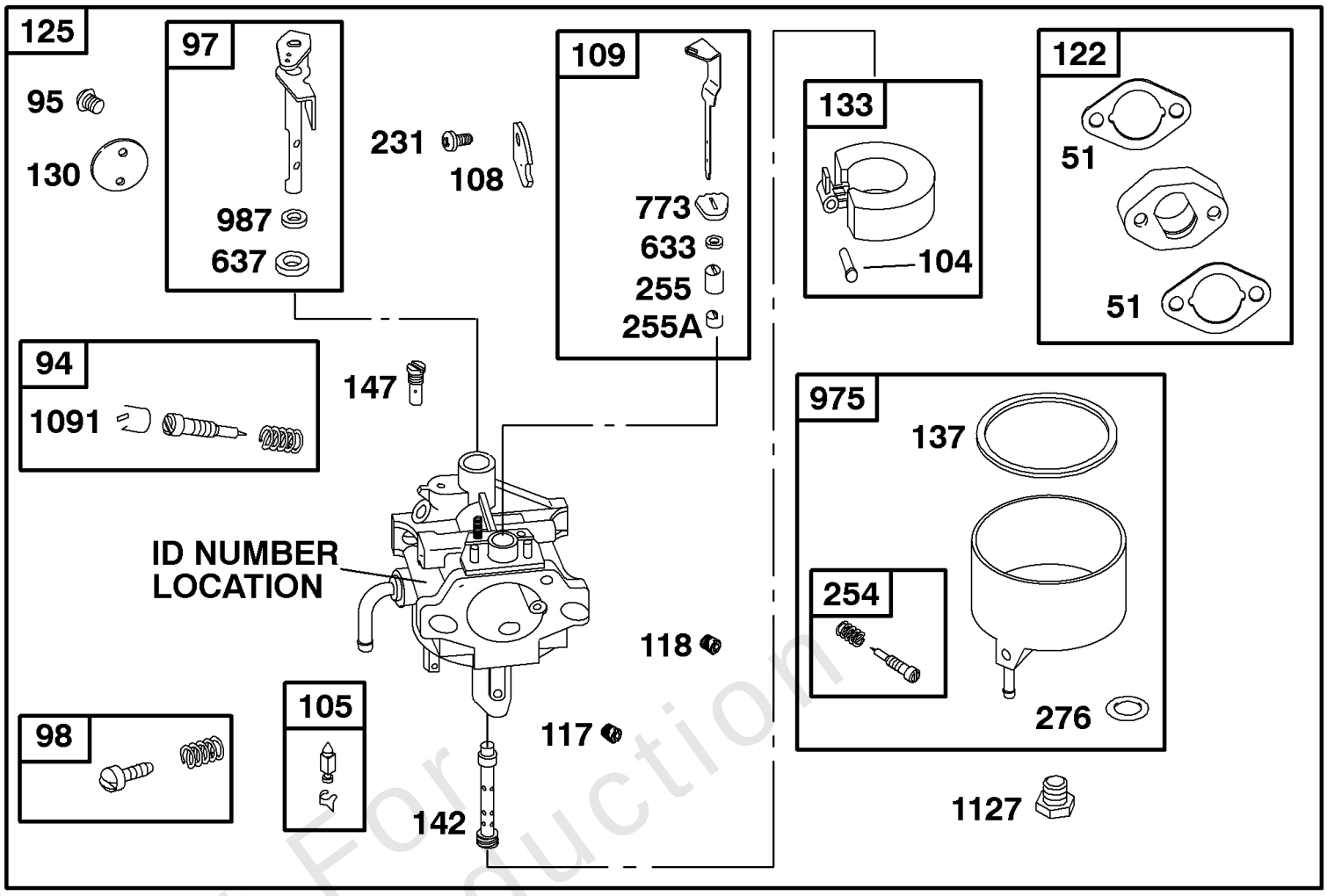

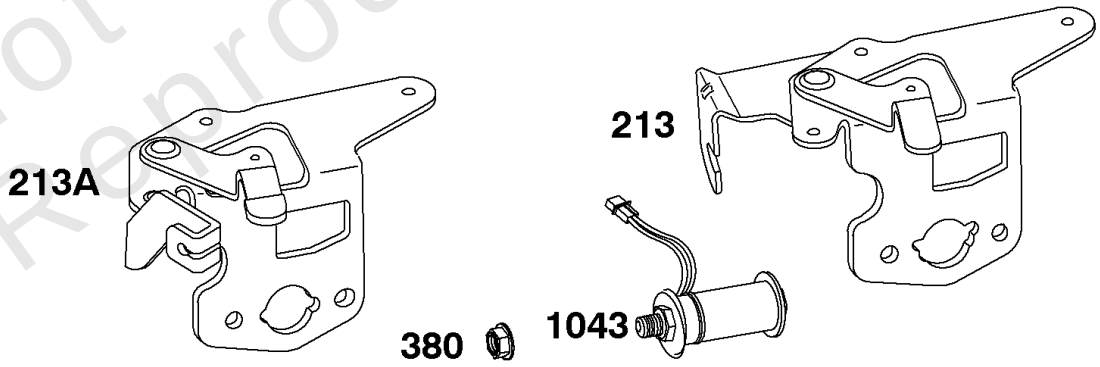

Not For Reproduction

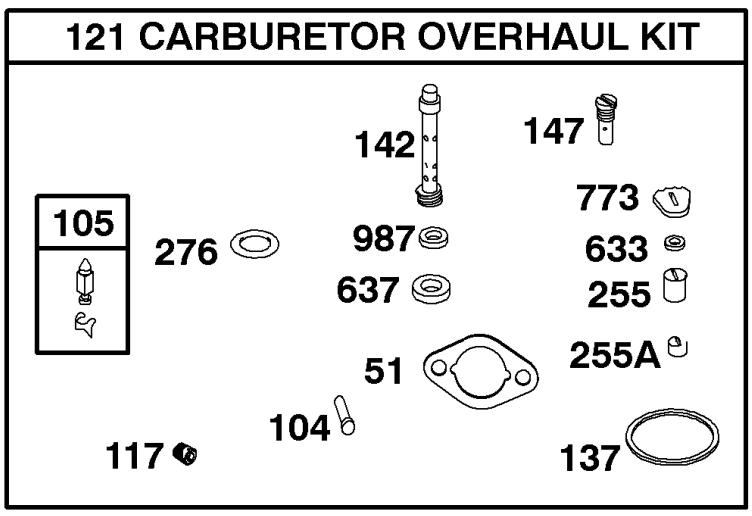

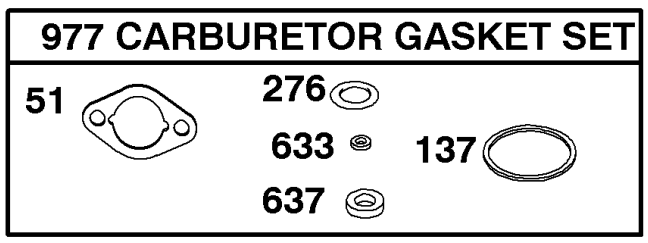

Copyright © Briggs & Stratton. All Rights reserved

REF NO	PART NO	QTY	DESCRIPTION
51	710060		GASKET, Intake
94	715293		KIT, Idle Mixture -Used Before Code Date 04092400
95	710722		SCREW -(Throttle Valve)
97	715141		SHAFT, Throttle
98	715074		KIT, Idle Speed
104	710195		PIN, Float Hinge
105	715075		VALVE, Float Needle -(Service With 693551 Starter Motor) -Used Before Code Date 04092400
105	716099		VALVE, Float Needle -Used After Code Date 04092300
108	710178		VALVE, Choke
109	715140		SHAFT, Choke
117	710649		JET, Main -(Standard)
118	710895		JET, Main -(High Altitude) (Carburetor Identification Number G188AA)
118	710782		JET, Main -(High Altitude)
121	716143		KIT, Carburetor Overhaul
122	715034		SPACER, Carburetor
125	715520		CARBURETOR
130	710290		VALVE, Throttle
133	715079		FLOAT, Carburetor
137	711857		GASKET, Float Bowl
142	710894		NOZZLE, Carburetor -(Standard) (Carburetor Identification Number G188AA)
142	710286		NOZZLE, Carburetor -(Standard)
147	710783		JET, Pilot -(High Altitude)
147	710188		JET-PILOT
213	710499		BRACKET, Choke Control
231	710191		SCREW -(Choke Valve)
254	716110		DRAIN, Carburetor Bowl
255	710177		BUSHING, Choke Shaft
255A	710179		BUSHING, Choke Shaft
276	711319		WASHER, Sealing
380	710081		NUT -(Electro Magnet)
633	-----		Seal-Choke/Thr Shaft -(Sold In Kit Only)
637	-----		Washer -(Throttle Shaft) (Throttle Shaft)(Sold In Kit Only)
773	710175		RETAINER
975	715050		BOWL, Float
977	715081		SET, Carburetor Gasket
987	710185		SEAL, Choke/Throttle Shaft
1091	710485		CAP, Limiter
1127	710197		SCREW -(Float Bowl to Carburetor Body)

Not For Reproduction

Copyright © Briggs & Stratton. All Rights reserved

Mfg. No: 117462-0535-E1

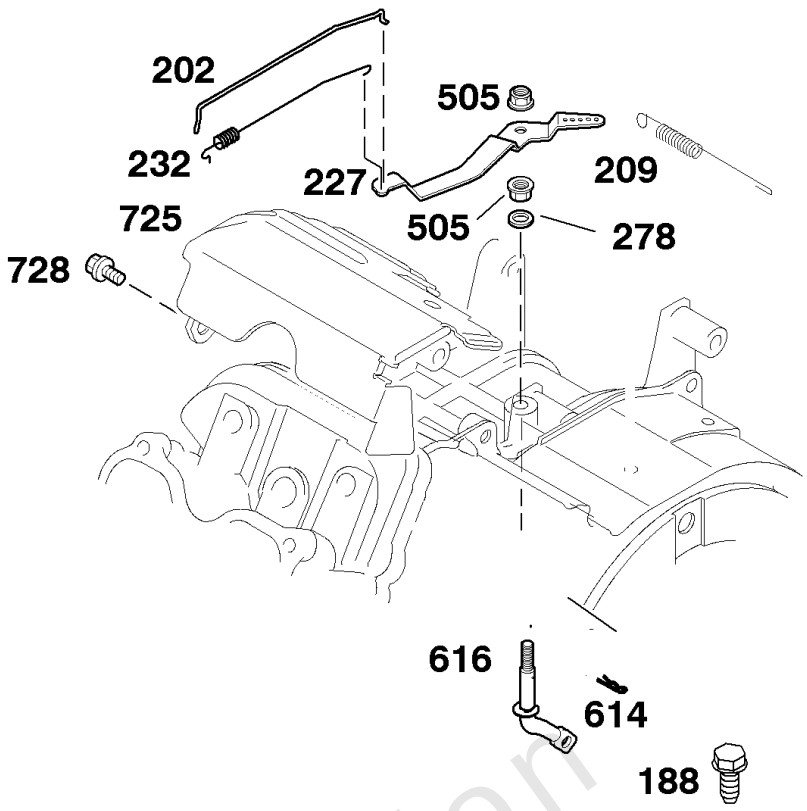

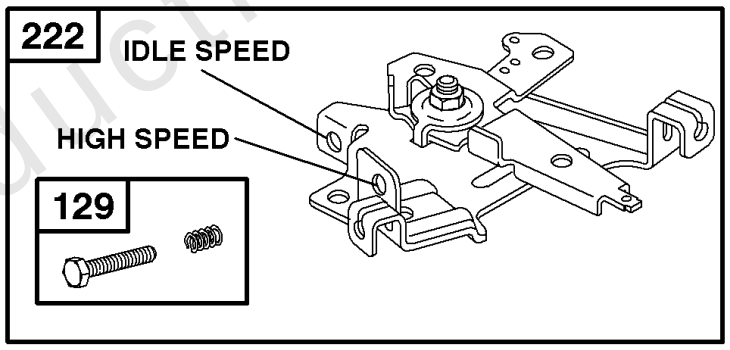

485

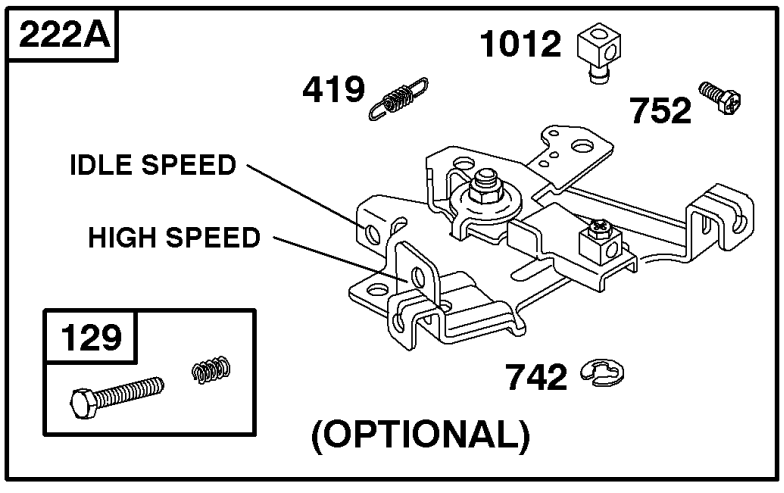

Not For Reproduction

Copyright © Briggs & Stratton. All Rights reserved

REF NO	PART NO	QTY	DESCRIPTION
129	715024		SCREW -(Governor)
188	710057		SCREW -(Control Bracket)
202	710052		LINK, Mechanical Governor
209	710726		SPRING, Governor
222	715046		BRACKET, Control
227	710051		LEVER, Governor Control
232	710053		SPRING/LINK, Governor
278	710058		WASHER -(Governor Lever)
419	710475		SPRING, Governor -(Return)
485	692295		KNOB, Air Cleaner Cover
505	710059		NUT -(Governor Lever)
614	710056		PIN, Cotter
616	710050		CRANK, Governor
725	710102		SHIELD, Heat
728	710023		SCREW -(Heat Shield)
742	710477		RETAINER, E Ring
752	710478		SCREW -(Link Retainer)
1012	710855		RETAINER, Link

Not For Reproduction

Copyright © Briggs & Stratton. All Rights reserved

Mfg. No: 117462-0535-E1

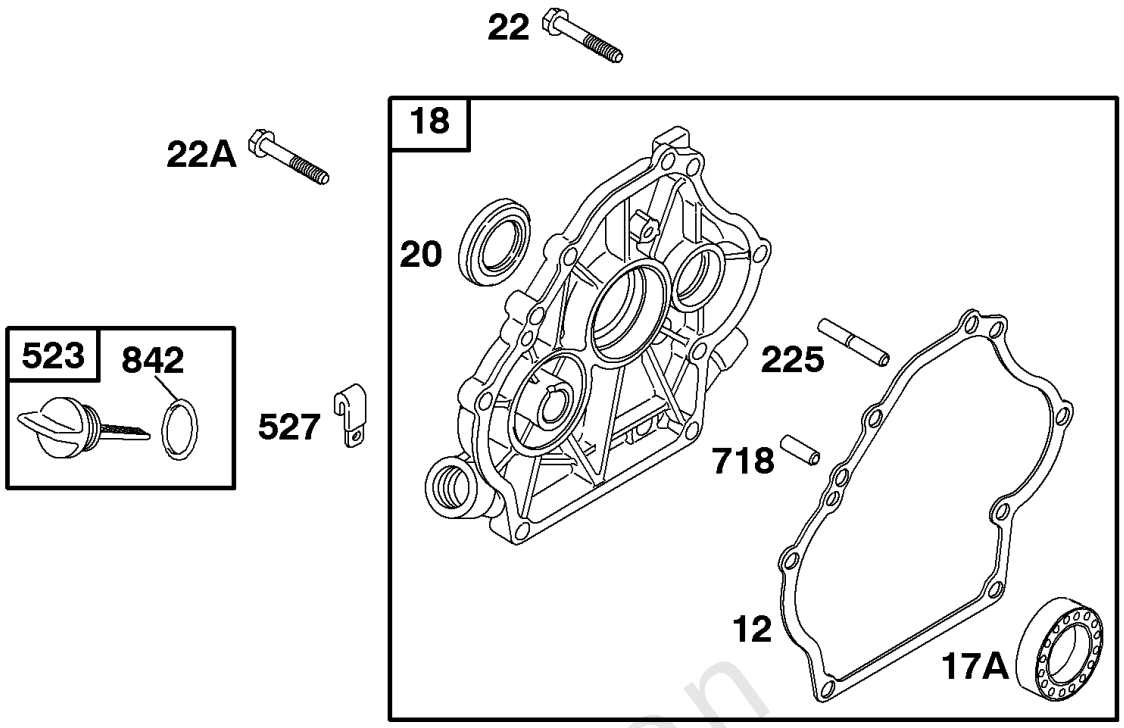

Not For Reproduction

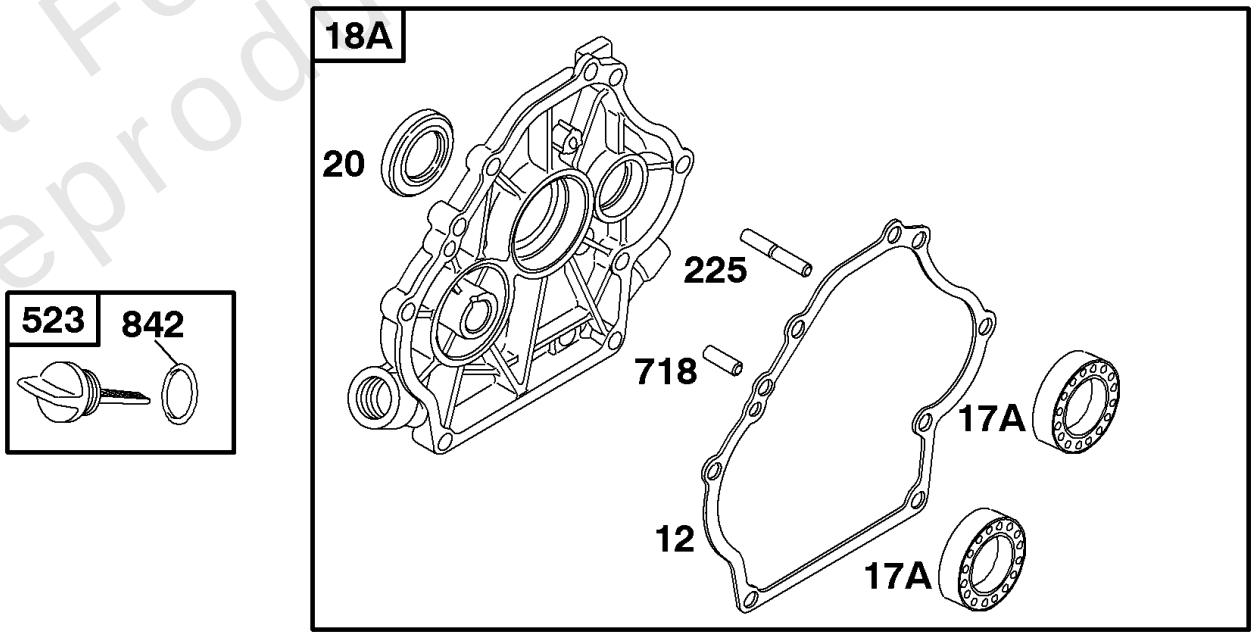

Copyright © Briggs & Stratton. All Rights reserved

Crankcase Cover, Valves

REF NO	PART NO	QTY	DESCRIPTION
12	710036		GASKET, Crankcase
17A	710594		BEARING, Ball -(Quantity 2)
18A	715699		COVER, Crankcase
20	710031		SEAL, Oil -(PTO Side) (PTO Side)
22	710032		SCREW -(Crankcase Cover/Sump) (Crankcase Cover/Sump)
22A	710306		SCREW -(Crankcase Cover/Sump) (Crankcase Cover/Sump)
225	710028		SHAFT, Governor Gear
523	715588		DIPSTICK
527	710100		CLAMP, Hose
718	710005		PIN, Locating
842	710029		SEAL, O-Ring -(Dipstick Tube)

Not For Reproduction

Copyright © Briggs & Stratton. All Rights reserved

Mfg. No: 117462-0535-E1

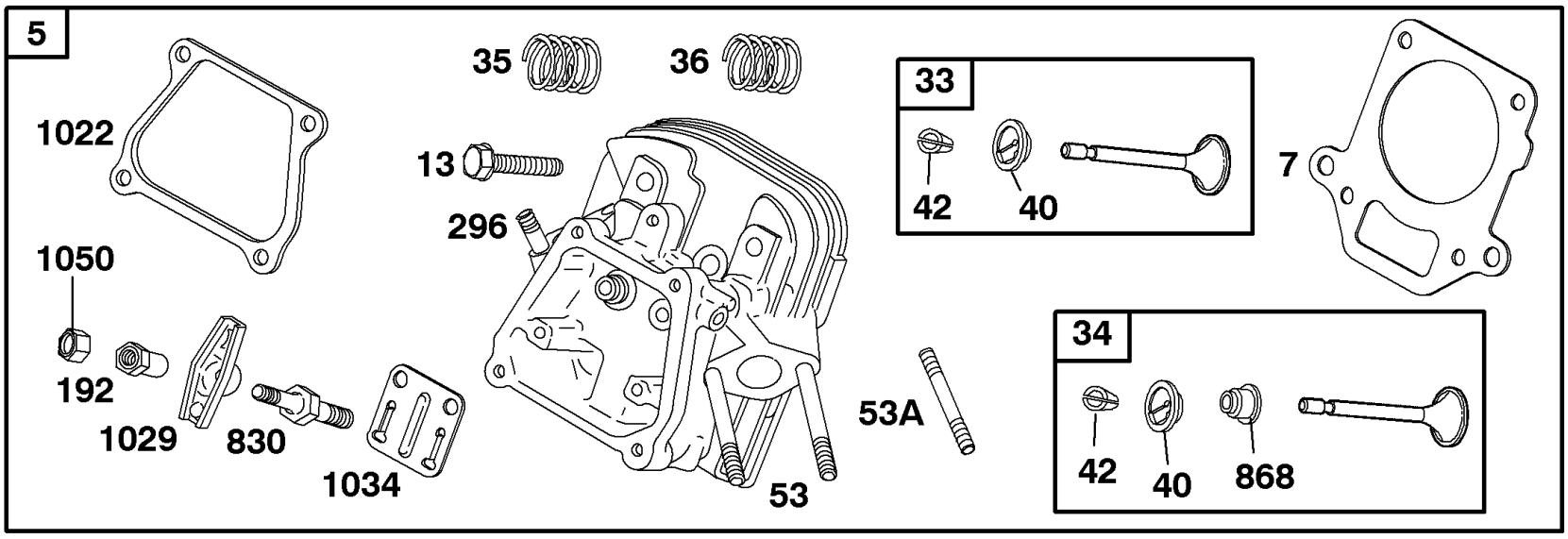

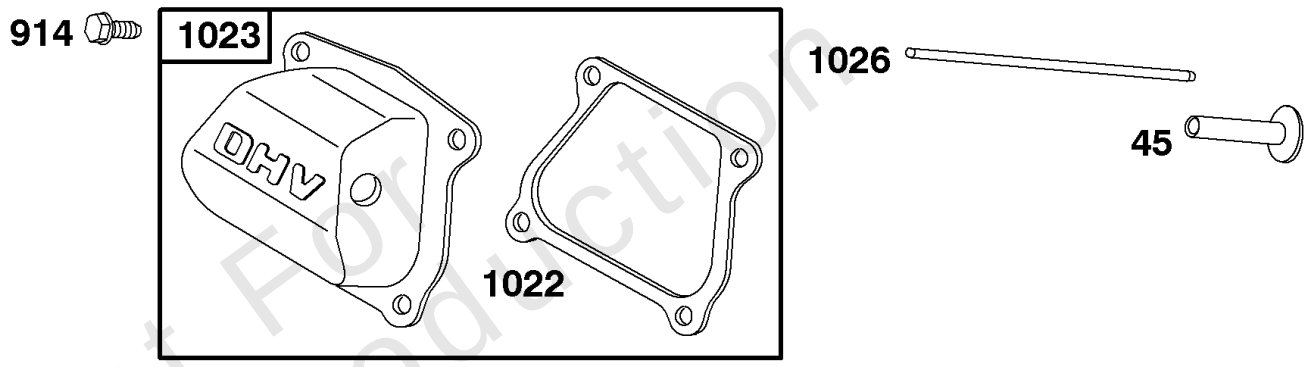

Not For Reproduction

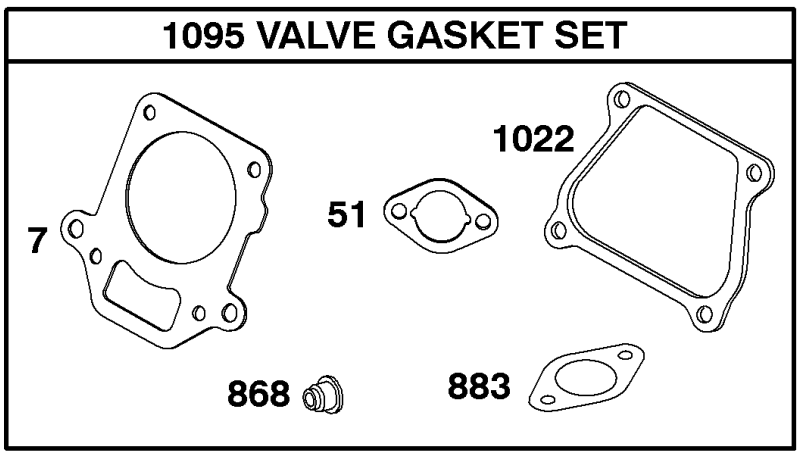

Copyright © Briggs & Stratton. All Rights reserved

Cylinder Head, Gasket Set - Valve, Lubrication

REF NO	PART NO	QTY	DESCRIPTION
5	715004		HEAD, Cylinder
7	710021		GASKET, Cylinder Head
13	710020		SCREW -(Cylinder Head)
33	715002		VALVE, Exhaust
34	715003		VALVE, Intake -Used Before Code Date 03013100
34	716145		VALVE, Intake -Used After Code Date 03013000
35	710011		SPRING, Valve -(Intake)
36	710011		SPRING, Valve -(Exhaust)
40	710012		RETAINER, Valve
42	715130		KEEPER, Valve
45	710008		TAPPET, Valve
51	710060		GASKET, Intake
53	710116		STUD -(Carburetor)
53A	710148		STUD -(Carburetor)
192	710015		ADJUSTER. Rocker Arm
296	710099		STUD -(Muffler)
830	710016		STUD, Rocker Arm -(Rocker Arm)
868	711634		SEAL, Valve -Used After Code Date 03013000
868	710979		SEAL, Valve -Used Before Code Date 03013100
883	710082		GASKET, Exhaust
914	710023		SCREW -(Rocker Cover)
1022	710024		GASKET, Rocker Cover
1023	715005		COVER, Rocker
1026	710013		ROD, Push
1029	710014		ARM, Rocker
1034	710017		GUIDE, Push Rod
1050	710007		ADJUSTER. Rocker Arm -(Rocker Arm)
1095	716118		GASKET SET, Valve -Used After Code Date 03013000
1095	715704		GASKET SET, Valve -Used Before Code Date 03013100

Not For Reproduction

Copyright © Briggs & Stratton. All Rights reserved

Cylinder, Gasket Set - Engine, Operator's Manual, Piston, Rings, Connecting Rod,

Mfg. No: 117462-0535-E1

1058 OPERATOR'S MANUAL

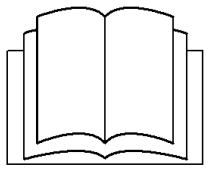

1319 WARNING LABEL

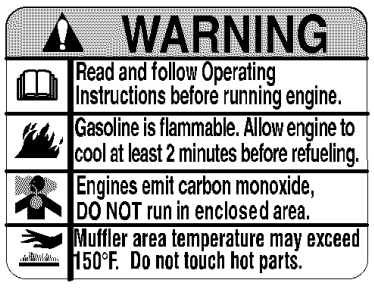

***REQUIRED** when replacing parts with warning labels affixed.*

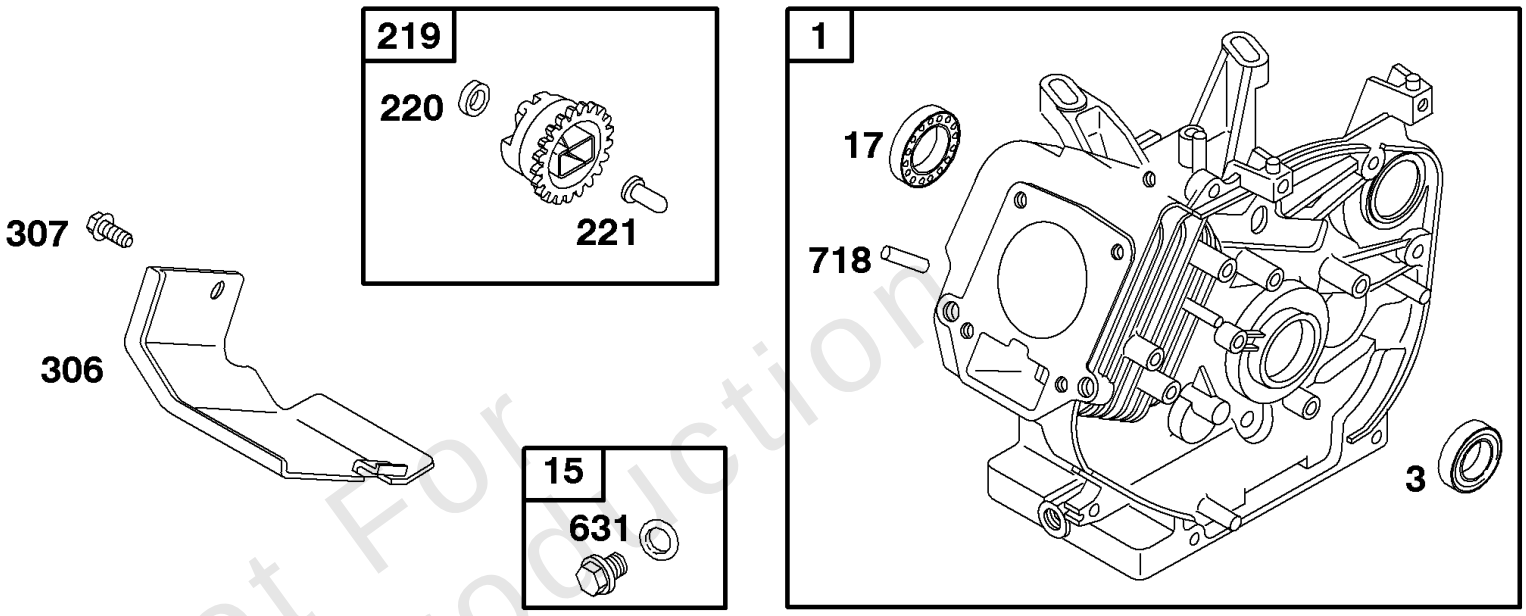

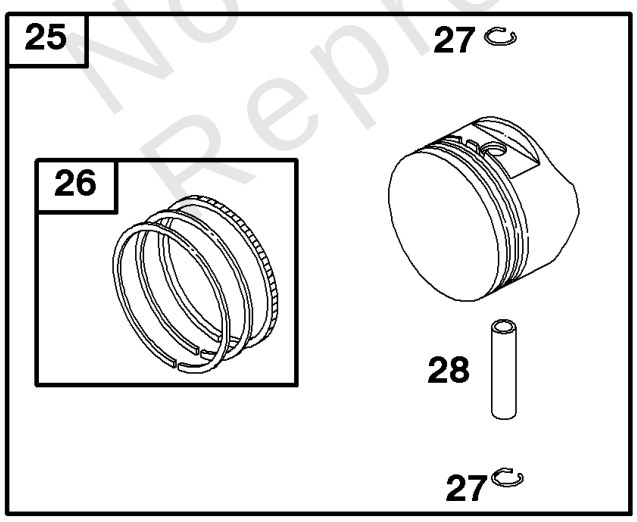

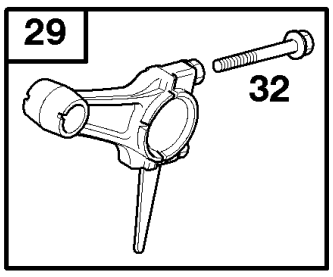

358 GASKET SET

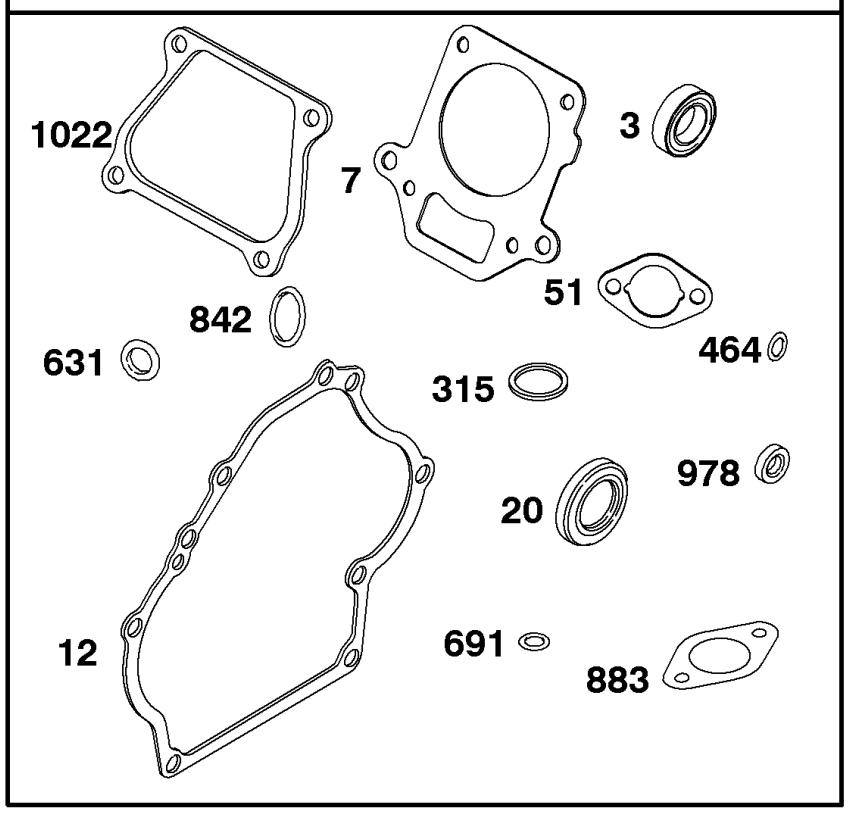

Not For Reproduction

Cylinder, Gasket Set - Engine, Operator's Manual, Piston, Rings, Connecting Rod,

REF NO	PART NO	QTY	DESCRIPTION
1	715300		CYLINDER ASSEMBLY
3	710000		SEAL, Oil -(Magneto Side)
7	710021		GASKET, Cylinder Head
12	710036		GASKET, Crankcase
15	715000		PLUG, Oil Drain
17	710003		BEARING, Ball
20	710031		SEAL, Oil -(PTO Side) (PTO Side)
25	716139		PISTON ASSEMBLY -(0.50mm Oversize)
25	716138		PISTON ASSEMBLY -(Standard)
26	715018		SET, Ring -(0.50mm Oversize)
26	715016		SET, Ring -(Standard)
27	710040		LOCK, Piston Pin
28	715455		PIN, Piston -(Standard)
29	715011		ROD, Connecting -(Standard)
29	715012		ROD, Connecting -(8500 Feet)
32	710041		SCREW -(Connecting Rod)
51	710060		GASKET, Intake
219	715696		GEAR, Governor
220	710545		WASHER -(Governor Gear)
221	710027		CUP, Governor
306	710063		SHIELD, Cylinder
307	710023		SCREW -(Cylinder Shield)
315	710072		SEAL, O-Ring -(Filter Bowl)
358	715032		GASKET SET, Engine
464	710069		SEAL, O-Ring -(Fuel Shut-off Valve)
631	710004		WASHER -(Oil Drain Plug)
691	710055		SEAL, Governor Shaft
718	710005		PIN, Locating
842	710029		SEAL, O-Ring -(Dipstick Tube)
883	710082		GASKET, Exhaust
978	710091		GASKET, Oil Guard
1022	710024		GASKET, Rocker Cover
1058	MS3824		MANUAL, Operator's
1319	794467		LABEL, Warning

Not For Reproduction

Copyright © Briggs & Stratton. All Rights reserved

Mfg. No: 117462-0535-E1

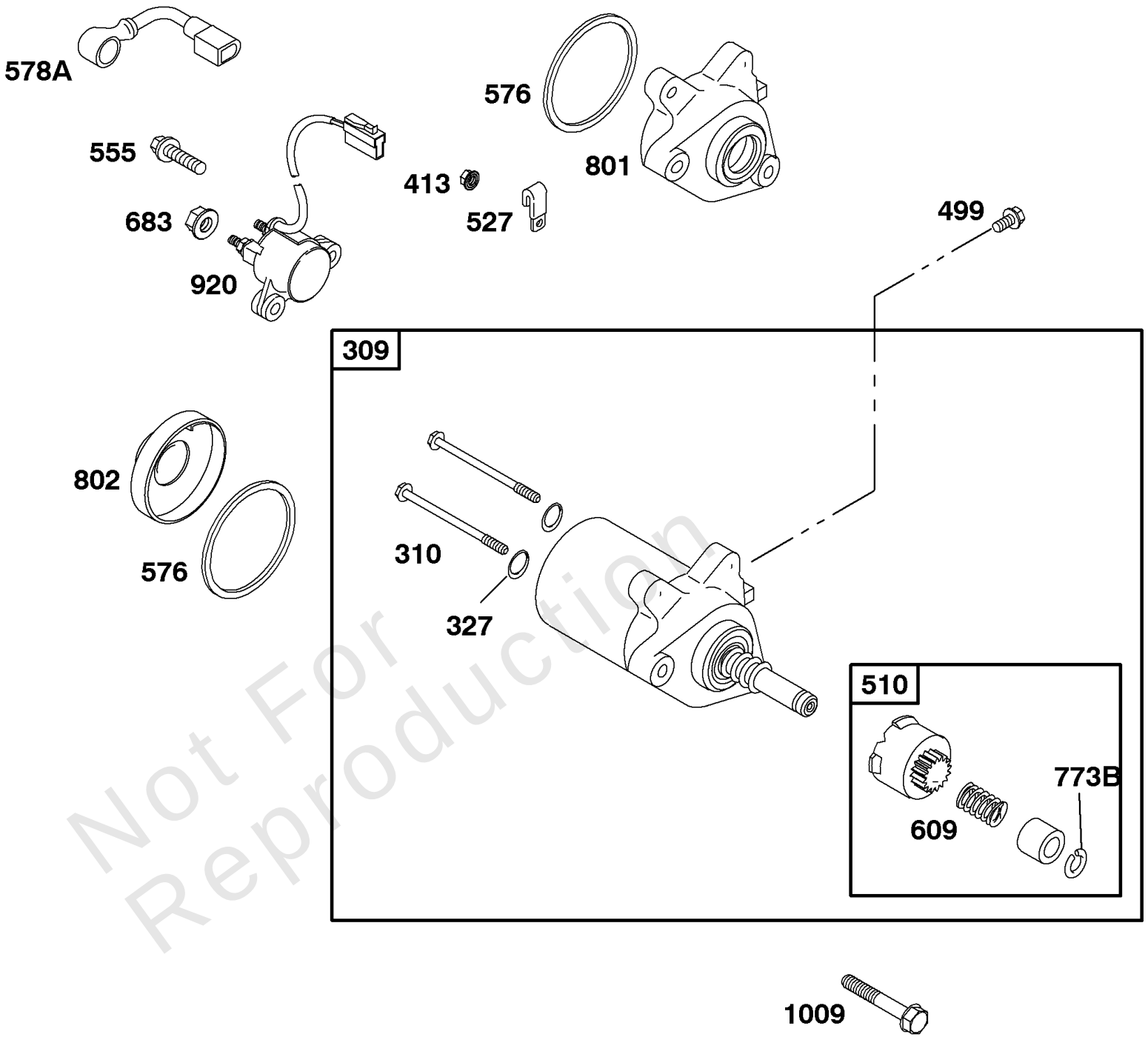

Not For Reproduction

Electric Starter

REF NO	PART NO	QTY	DESCRIPTION
309	715412		MOTOR, Starter
309	715633		MOTOR, Starter
310	710838		SCREW -(Starter Motor)
327	710841		WASHER -(Starter Sub Assembly)
413	710081		NUT -(Starter Motor)
499	710853		SCREW -(Starter Sub Assembly)
510	715634		DRIVE, Starter
527	710100		CLAMP, Hose
555	710845		SCREW -(Starter Solenoid)
576	710834		SEAL, O-Ring -(Starter Sub Assembly)
578A	710847		WIRE ASSEMBLY -(Starter Solenoid)
609	710828		SPRING, Starter Drive
683	710849		NUT -(Starter Solenoid)
773B	710830		RETAINER
801	710836		CAP, Drive -(Includes Brush Set)(Order Starter Motor 715808)
802	710832		CAP, End
920	710843		SOLENOID, Starter
1009	710348		SCREW -(Starter Motor)

Not For Reproduction

Mfg. No: 117462-0535-E1

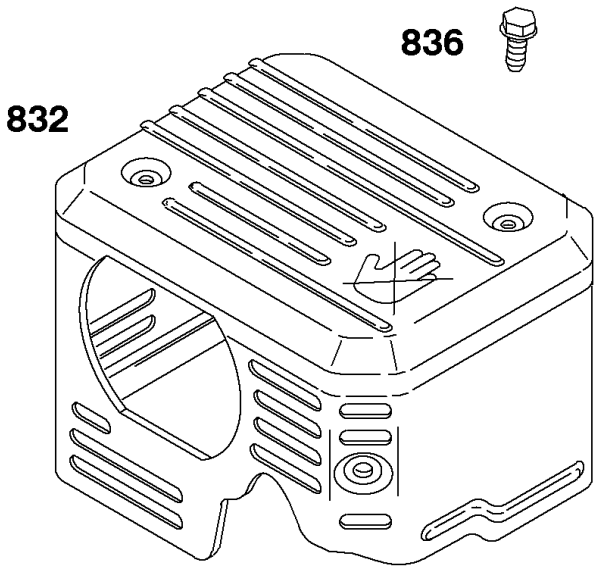

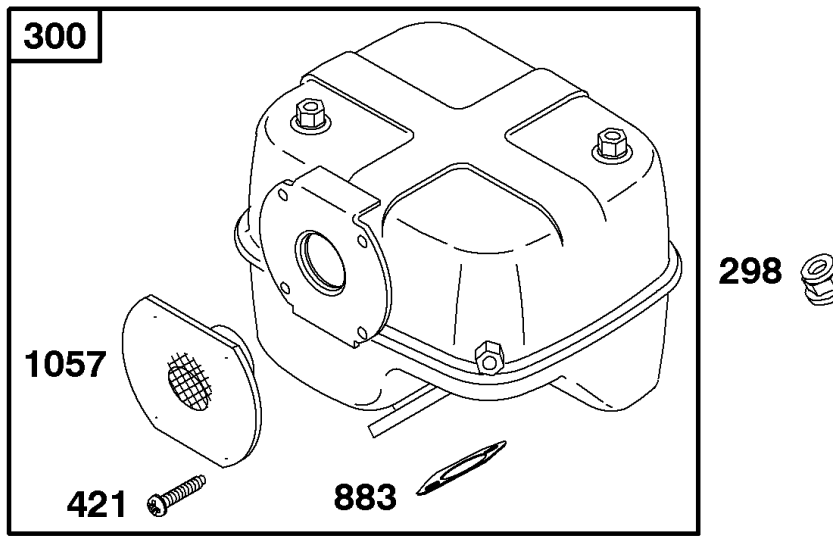

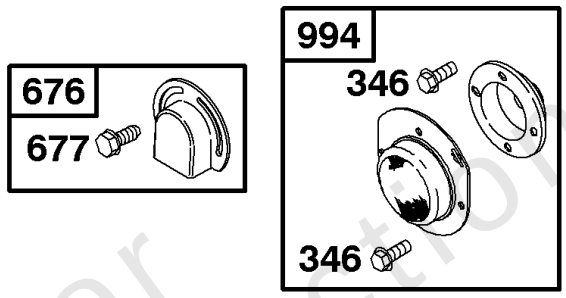

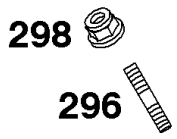

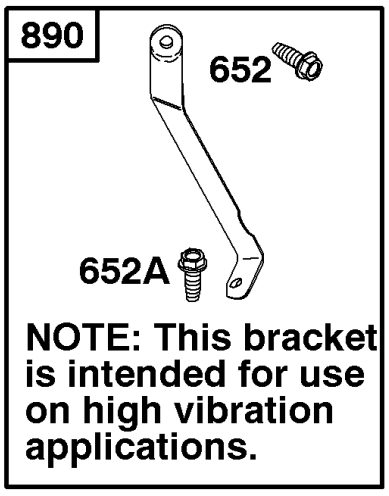

NOTE: This bracket is intended for use on high vibration applications.

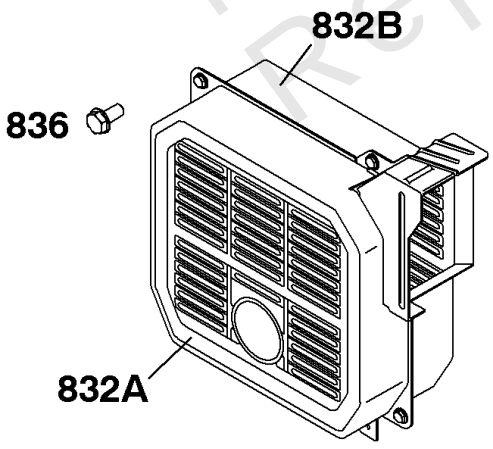

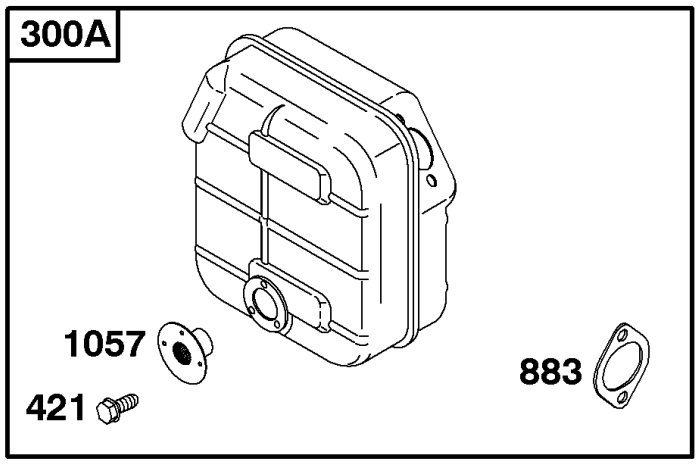

NOTE: This muffler is intended for replacement purposes only and is not to be used for retrofitting to engines with different exhaust systems.

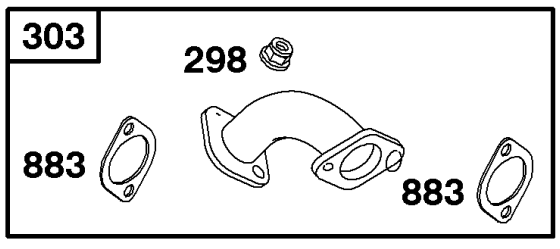

Not For Reproduction

Copyright © Briggs & Stratton. All Rights reserved

Exhaust System

REF NO	PART NO	QTY	DESCRIPTION
296	710099		STUD -(Muffler)
298	710090		LOCKNUT -(Muffler and Elbow)
300	715435		MUFFLER -(High Mount)
300A	715602		MUFFLER -(Low Mount)
303	715603		MANIFOLD, Exhaust -(Low Mount)
346	690661		SCREW -(Spark Arrestor)
421	710307		SCREW -(Outlet Screen)
652	710057		SCREW -(Support Bracket)
652A	710248		SCREW -(Support Bracket)
676	715230		DEFLECTOR, Muffler
677	710307		SCREW -(Muffler Deflector)
832	710333		GUARD, Muffler -(High Mount)
832A	710793		MUFFLER -(Low Mount)(Front)
832B	710794		MUFFLER -(Low Mount)(Rear)
836	710074		SCREW -(Muffler Guard)
883	710082		GASKET, Exhaust
890	715319		BRACKET, Support -(Optional)
994	715491		ARRESTOR, Spark
1057	710329		SCREEN-OUTLET

Not For Reproduction

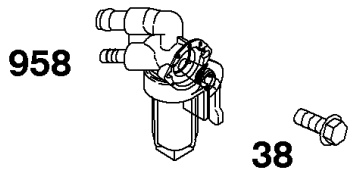

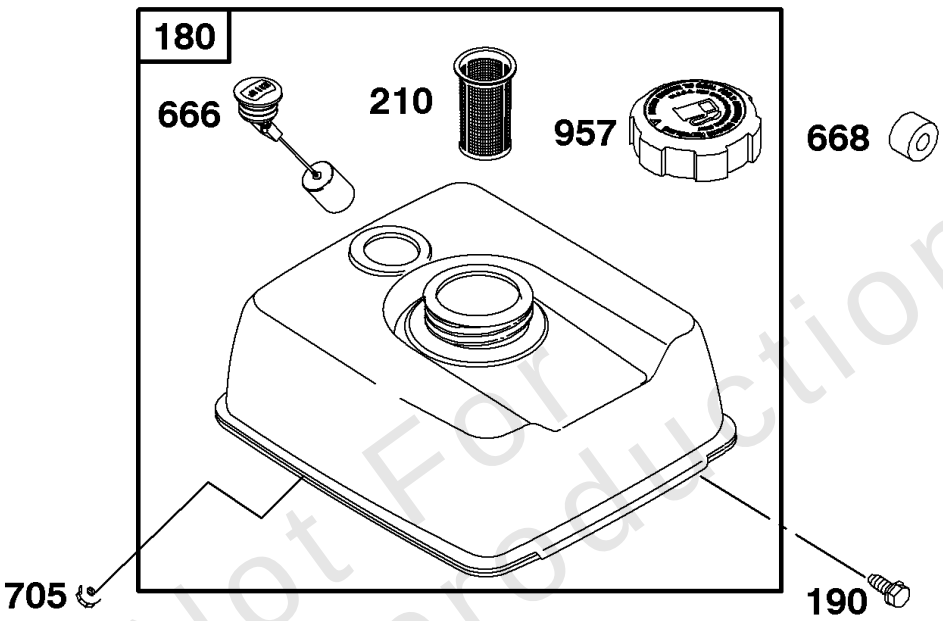

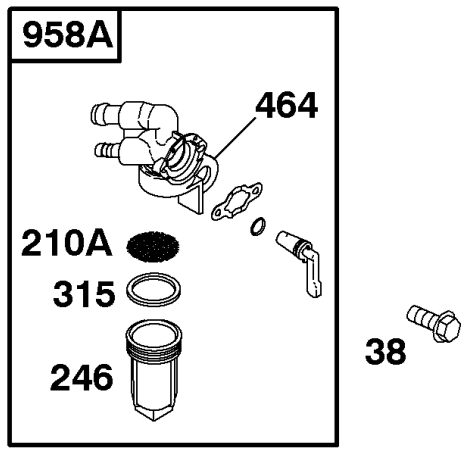

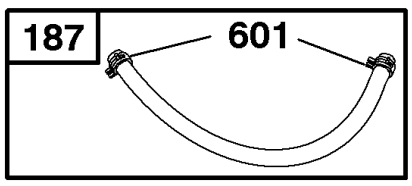

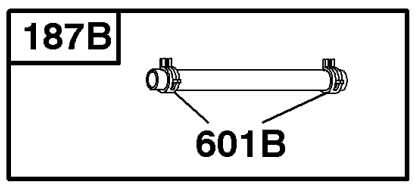

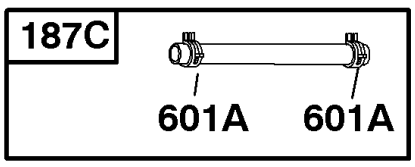

Not For Reproduction

Fuel Supply

REF NO	PART NO	QTY	DESCRIPTION
38	710160		SCREW -(Shut Off Valve) (Fuel Shut Off Valve)
180	715306		TANK, Fuel -(Metal)
187	716126		LINE-FUEL -(8mm Inside Diameter)(Cut To Required Length)
187B	716124		HOSE, Vacuum -(6mm ID)(Cut To Required Length)
187C	716122		LINE, Fuel -(4mm Inside Diameter)(Cut to Required Length)
190	710023		SCREW -(Fuel Tank)
210	710065		STRAINER-FUEL
210A	710071		STRAINER, Fuel
240	298090S		FILTER, Fuel
246	710070		BOWL, Fuel Filter
315	710072		SEAL, O-Ring -(Filter Bowl)
464	710069		SEAL, O-Ring -(Fuel Shut-off Valve)
601	711998		CLAMP, Hose
601A	711549		CLAMP, HOSE
601B	711925		CLAMP, Hose
666	710066		GAUGE, Fuel
668	710159		SPACER, Fuel Tank
705	710068		LOCKNUT -(Fuel Tank)
957	710490		CAP, Fuel Tank -(Plastic)
958	716111		VALVE, Fuel Shut Off -(Plastic) -Used After Code Date 04072900
958A	715027		VALVE, Fuel Shut Off -(Plastic) -Used Before Code Date 04073000

Not For Reproduction

Oil Sensor Group

Mfg. No: 117462-0535-E1

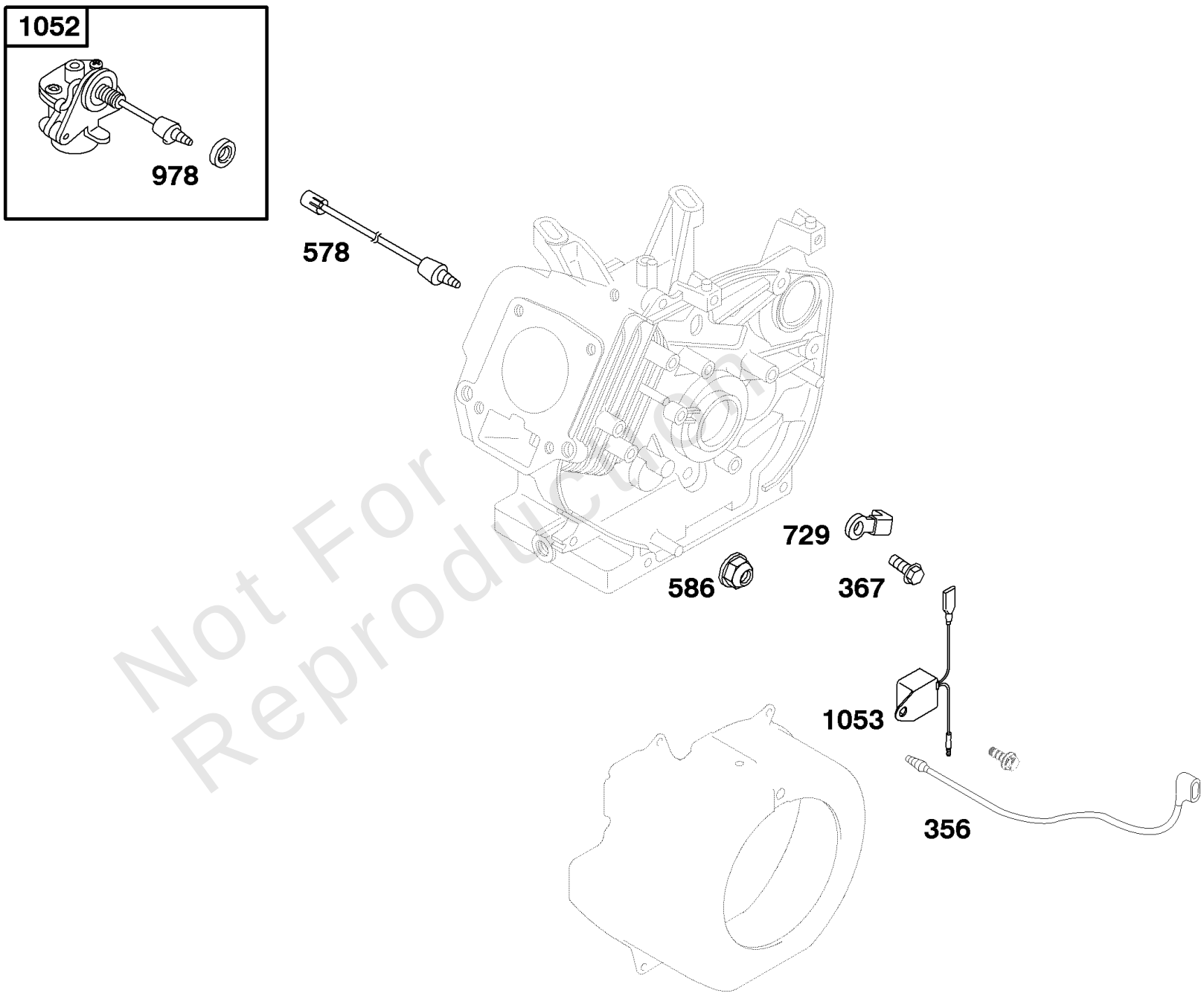

Not For Reproduction

Copyright © Briggs & Stratton. All Rights reserved

Oil Sensor Group

REF NO	PART NO	QTY	DESCRIPTION
356	710120		WIRE, Stop
367	710023		SCREW -(Wire Clip)
578	710308		WIRE ASSEMBLY -(Oil Sensor)
586	710090		LOCKNUT -(Oil Sensor)
729	710083		CLIP, Wire
978	710091		GASKET, Oil Guard
1052	715353		SENSOR, Oil
1053	710305		MODULE, Oil Guard

Not For Reproduction

Copyright © Briggs & Stratton. All Rights reserved

REF NO	PART NO	QTY	DESCRIPTION

Not For Reproduction

Copyright © Briggs & Stratton. All Rights reserved

Mfg. No: 117462-0535-E1

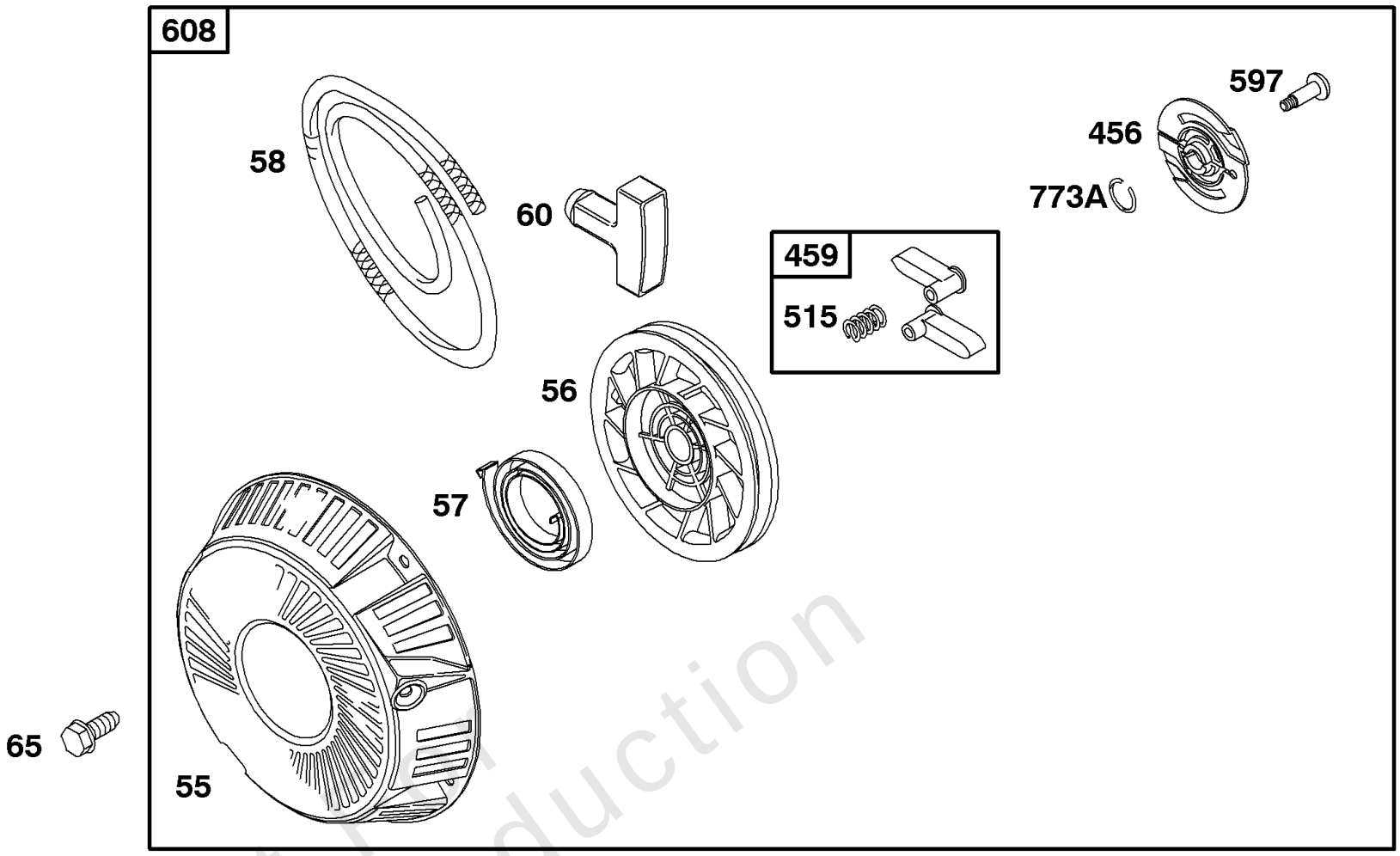

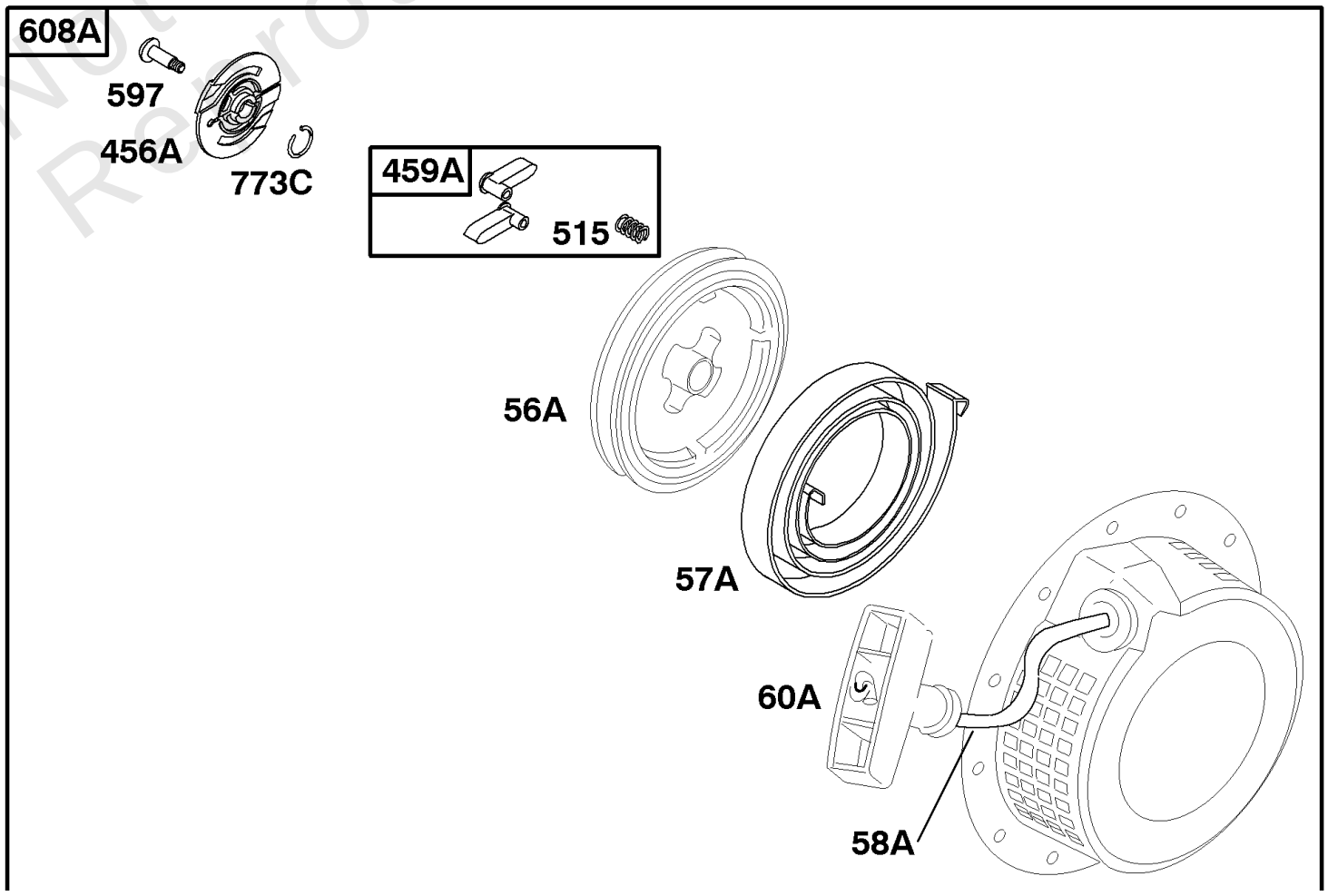

Not for Reproduction

Copyright © Briggs & Stratton. All Rights reserved

Rewind Starter

REF NO	PART NO	QTY	DESCRIPTION
55	711859		HOUSING, Rewind Starter
56	710274		PULLEY, Rope Starter
56A	711853		PULLEY, Rope Starter
57	710270		SPRING, Rewind Starter
57A	711855		SPRING, Rewind Starter
58	66574		ROPE, Starter -(Cut To Required Length)
58A	711850		ROPE, Starter -(Cut To Required Length)
60	490652		GRIP-STARTER ROPE
60A	711852		GRIP, Starter Rope
65	710074		SCREW -(Rewind Starter)
456	710272		PLATE, Pawl Friction
456A	711854		PLATE, Pawl Friction
459	715256		PAWL, Ratchet
459A	716897		PAWL, Ratchet
515	691528		SPRING, Pawl
597	690876		SCREW -(Pawl Friction Plate)
608A	715128		STARTER, Rewind
773A	690875		RETAINER
773C	711225		RETAINER

Not For Reproduction

Copyright © Briggs & Stratton. All Rights reserved

VANGUARD®

COMMERCIAL POWER

BRIGGS & STRATTON®

Copyright © Briggs & Stratton. All Rights reserved