Parts Manual

Mfg. No: 106232-0142-H1

Copyright © Briggs & Stratton. All Rights reserved

21-Jun-2026

Model Components

Page

Air Cleaner. 4
Armature, Controls, Electrical System, Governor Spring, Ignition, Spark Plug. 6
Blower Housing, Flywheel, Rewind Starter. 8
Camshaft, Crankcase Cover, Crankshaft, Cylinder, Piston/Rings/Connecting Rod, Warning Label. 10
Carburetor. 14
Cylinder Head, Gasket Set. 16
Exhaust System, Fuel Supply. 17
Replacement Engine - US & Canada. 19

Not For Reproduction

Copyright © Briggs & Stratton. All Rights reserved

Air Cleaner

Mfg. No: 106232-0142-H1

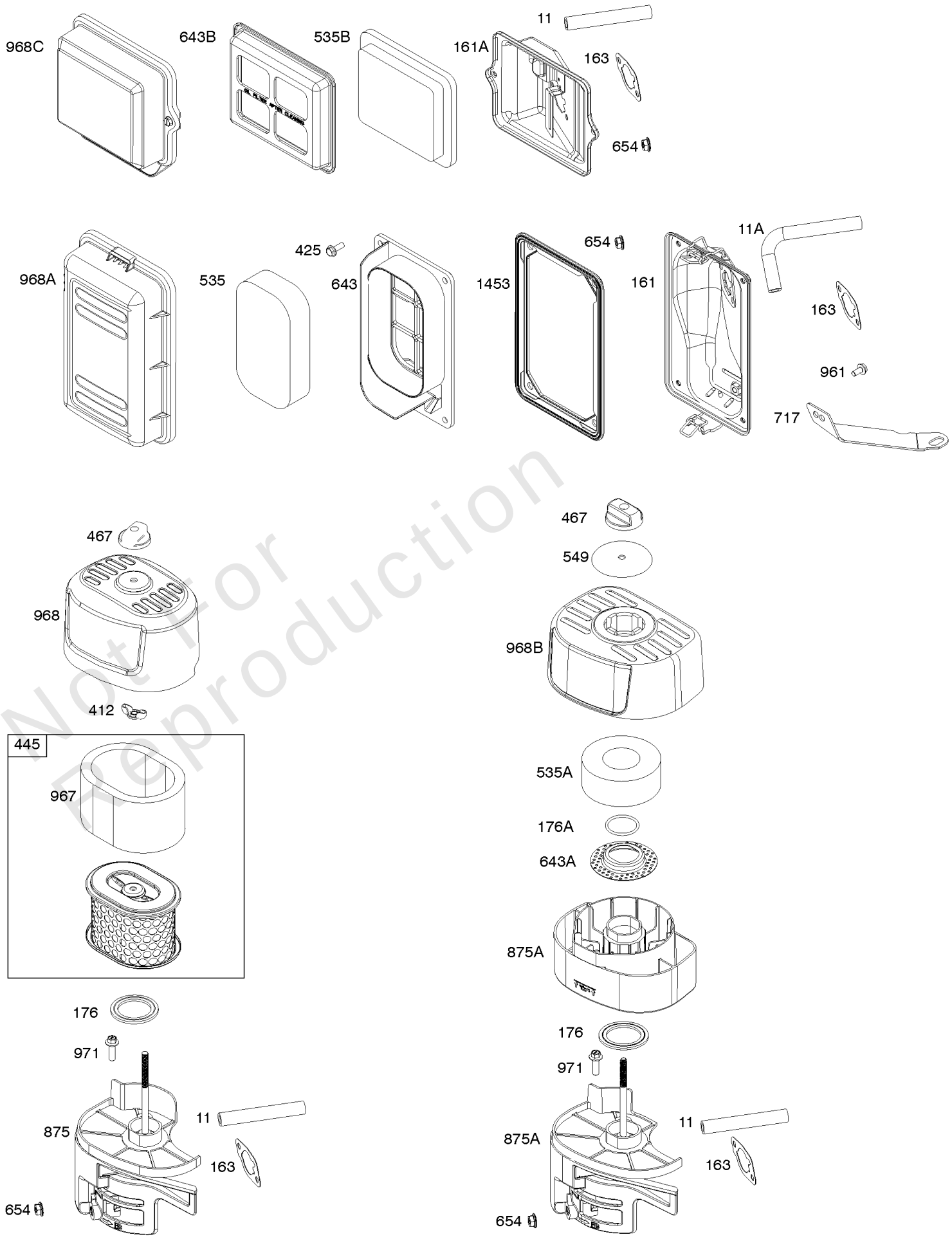

Not For Reproduction

Air Cleaner

REF NO	PART NO	QTY	DESCRIPTION
11	590698		TUBE, Breather
161	591714		BASE, Air Cleaner
161A	593441		BASE, Air Cleaner
163	590605		GASKET, Air Cleaner
176	590695		SEAL, O-Ring -(Air Cleaner Base)
176A	793441		SEAL, O-Ring -(Air Cleaner Base)
412	590697		NUT -(Air Cleaner Cover)
425	591716		SCREW -(Air Cleaner Cover)
445	590601		FILTER, A/C Cartridge
467	691985		KNOB, Air Cleaner Cover
535	591717		FILTER, Air Cleaner Foam
535A	792472		FILTER, Air Cleaner Foam
535B	696263		FILTER, Air Cleaner Foam
549	593365		WASHER -(Air Cleaner)
643	591718		RETAINER-AIR FILTER
643A	593363		RETAINER, Air Filter
643B	593442		RETAINER, Air Filter
654	590692		NUT -(Carburetor)
717	591719		BRACKET, Air Cleaner
875	590693		BASE, Air Cleaner
875A	593362		BASE, Air Cleaner
961	590850		SCREW -(Air Cleaner Bracket)
967	590602		FILTER, Pre Cleaner
968	590694		COVER, Air Cleaner
968A	591720		COVER, Air Cleaner
968B	593364		COVER, Air Cleaner
968C	791082		COVER, Air Cleaner
971	590643		SCREW -(Air Cleaner Base to Carburetor/Throttle Body)
1453	591715		SEAL, Air Cleaner Cover

Not For Reproduction

Copyright © Briggs & Stratton. All Rights reserved

Armature, Controls, Electrical System, Governor Spring, Ignition, Spark Plug

Mfg. No: 106232-0142-H1

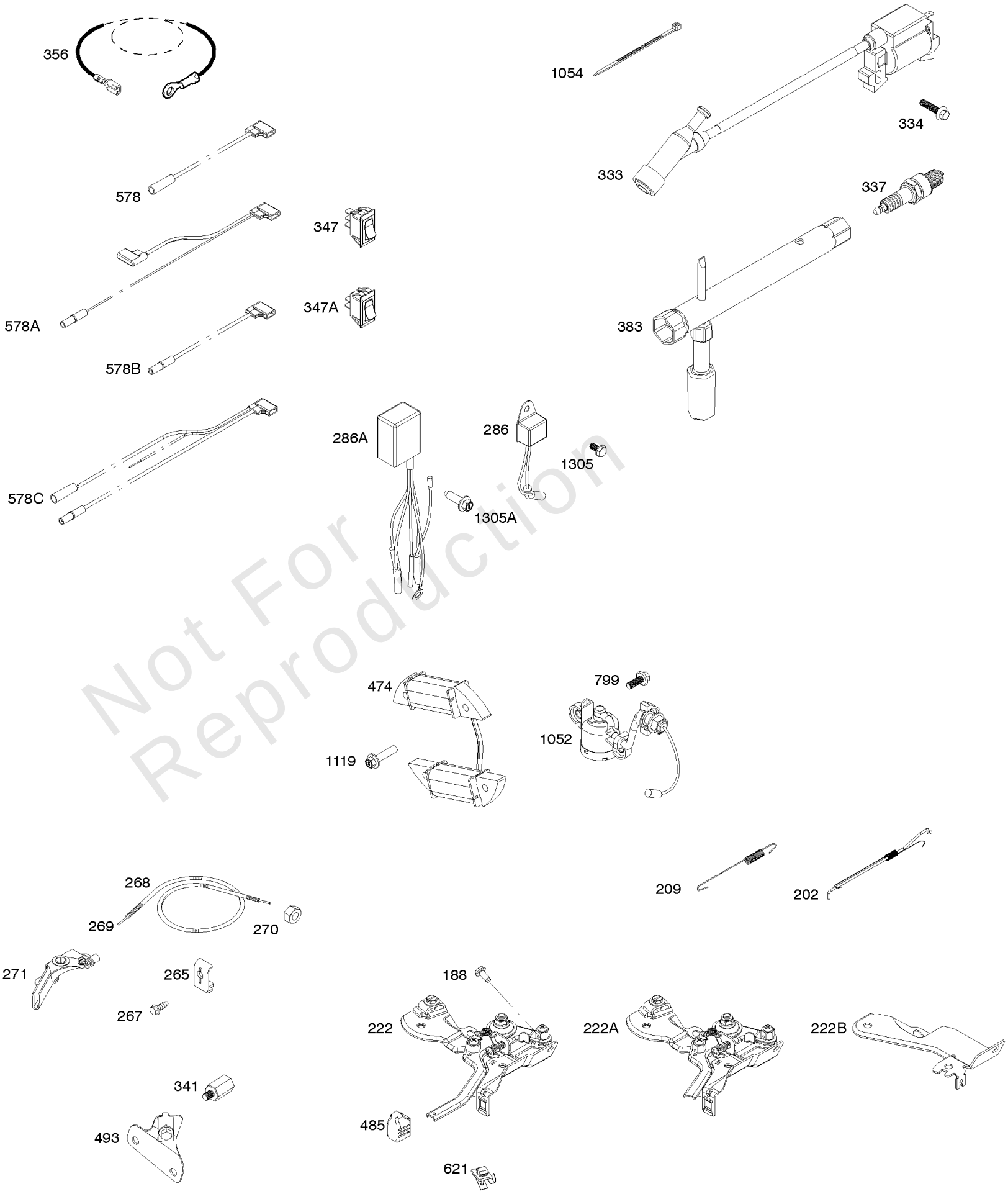

Not For Reproduction

Armature, Controls, Electrical System, Governor Spring, Ignition, Spark Plug

REF NO	PART NO	QTY	DESCRIPTION
188	590850		SCREW -(Control Bracket)
202	590645		LINK, Mechanical Governor -Used Before Code Date 12030500
202	591438		LINK, Mechanical Governor -Used After Code Date 12030400
209	590624		SPRING, Governor -(White) -Used Before Code Date 12030500
209	590625		SPRING, Governor -(Blue) -Used After Code Date 12030400
222	590705		BRACKET, Control
265	691024		CLAMP, Casing
267	699492		SCREW -(Casing Clamp)
268	691025		CASING, Control Wire -(Cut To Required Length)
269	691026		WIRE, Control -(Cut To Required Length)
270	691027		NUT -(Control Wire Casing)
271	691028		LEVER, Control
286	590702		MODULE, Oil Sensor
286A	591729		MODULE, Oil Sensor
333	590603		ARMATURE, Magneto
334	590644		SCREW -(Magneto Armature)
337	491055S		PLUG, Spark
337	84007216		PLUG, Spark -(China Only)
341	797699		STUD -(Mounting Bracket) (Remote Choke)
347	697854		SWITCH, Rocker
356	695630		WIRE, Stop
383	590721		WRENCH, Spark Plug
474	592254		ALTERNATOR
485	797339		KNOB, Control
493	797700		BRACKET, Mounting -(Remote Choke)
578A	590689		WIRE ASSEMBLY
578C	590722		WIRE ASSEMBLY
621	692310		SWITCH, Stop
799	590703		SCREW -(Oil Sensor)
1052	590671		SENSOR, Oil
1054	280275		TIE, Cable
1119	590644		SCREW -(Alternator)
1305	590850		SCREW -(Oil Sensor Module)
1305A	590643		SCREW -(Oil Sensor Module)

Not For Reproduction

Copyright © Briggs & Stratton. All Rights reserved

Blower Housing, Flywheel, Rewind Starter

Mfg. No: 106232-0142-H1

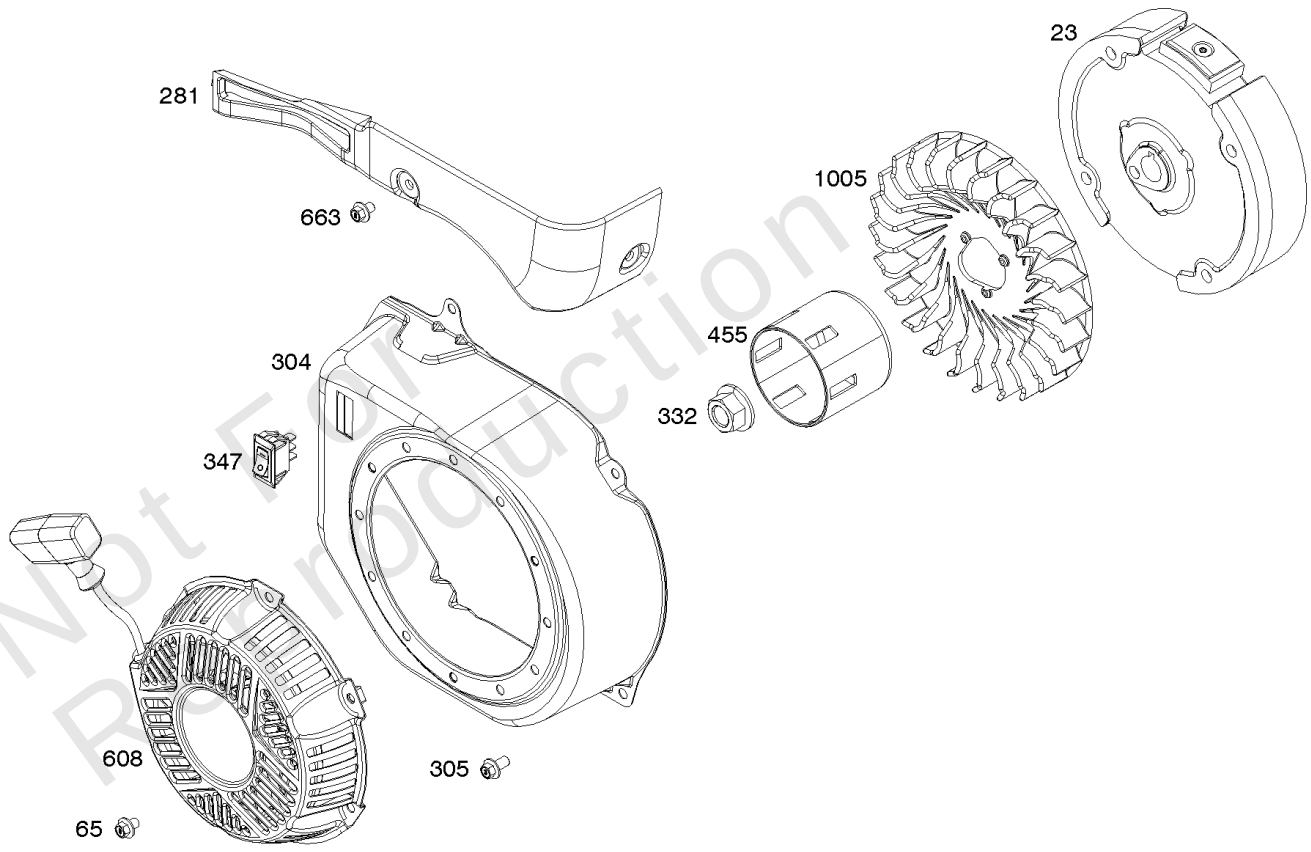

Not For Reproduction

Copyright © Briggs & Stratton. All Rights reserved

Blower Housing, Flywheel, Rewind Starter

REF NO	PART NO	QTY	DESCRIPTION
23	590681		FLYWHEEL -(-Used Before Code Date 21052000)
23	595228		FLYWHEEL -(-Used After Code Date 21051900)
65	590683		SCREW -(Rewind Starter)
281	590707		PANEL, Control
304	590725		HOUSING, Blower
305	590850		SCREW -(Blower Housing)
332	590635		NUT -(Flywheel)
347	697854		SWITCH, Rocker
455	590682		CUP, Flywheel
608	590607		STARTER, Rewind
663	590706		SCREW -(Control Panel)
1005	590679		FAN, Flywheel

Not For Reproduction

Copyright © Briggs & Stratton. All Rights reserved

Camshaft, Crankcase Cover, Crankshaft, Cylinder, Piston/Rings/Connecting Rod, Warning

Mfg. No: 106232-0142-H1

1319 WARNING LABEL	1319A WARNING LABEL	1036 EMISSIONS LABEL
REQUIRED *when replacing parts with warning labels affixed.*	***REQUIRED*** *when replacing parts with warning labels affixed.*	

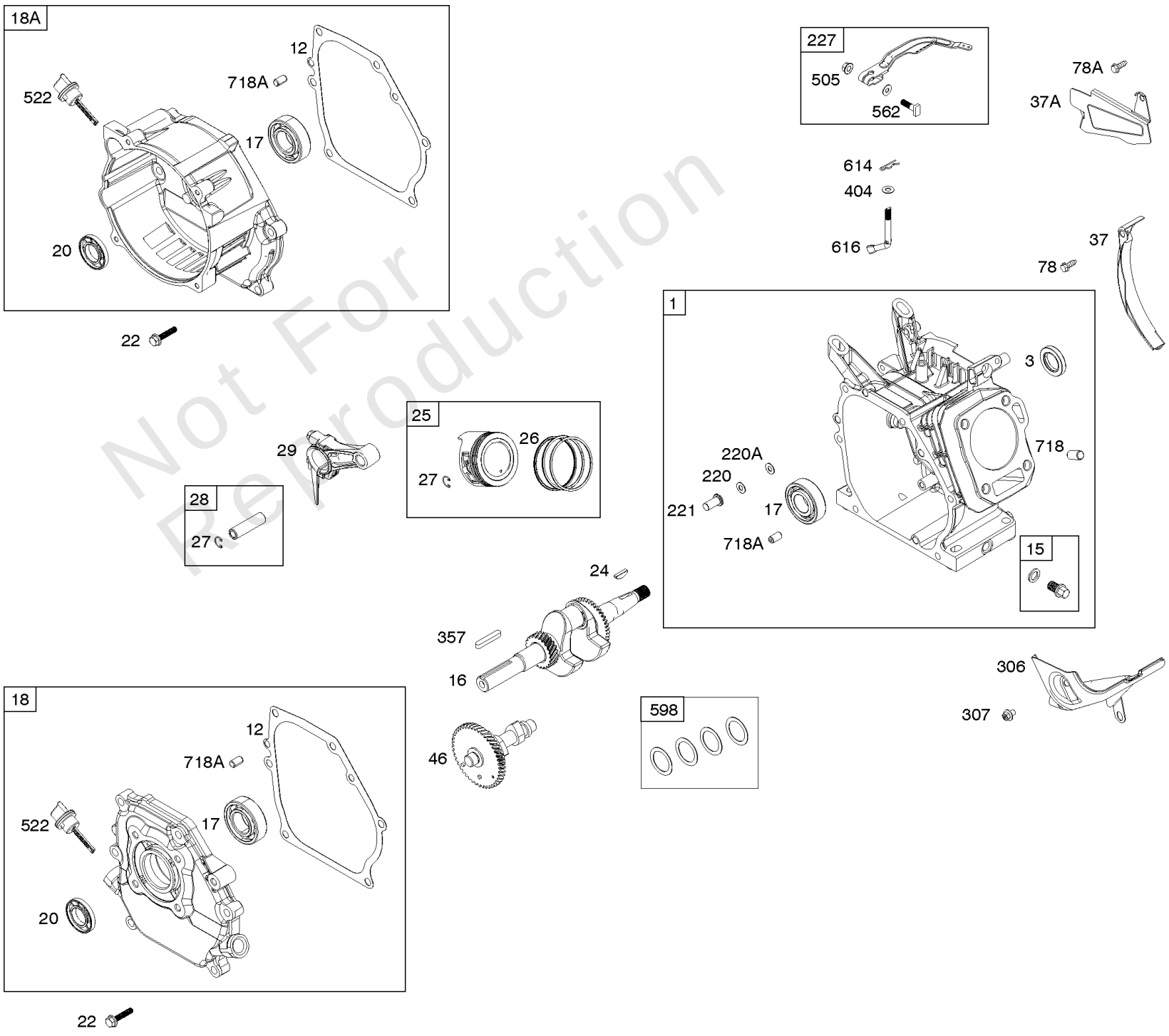

Not For Reproduction

REF NO	PART NO	QTY	DESCRIPTION
1	590752		CYLINDER ASSEMBLY -Used Before Code Date 18031500
1	84002087		CYLINDER ASSEMBLY -Used After Code Date 18031400
3	590712		SEAL, Oil -(Magneto Side)
12	590608		GASKET, Crankcase
15	590678		PLUG, Oil Drain
16	591288		CRANKSHAFT
17	590715		BEARING, Ball
18	590718		COVER, Crankcase
20	590712		SEAL, Oil -(PTO Side)
22	590714		SCREW -(Crankcase Cover/Sump)
24	797286		KEY, Flywheel
25	590662		PISTON ASSEMBLY -(-Used Before Code Date 21052000)
25	590741		PISTON ASSEMBLY -(.010 Oversize) (-Used Before Code Date 21052000)
25	590743		PISTON ASSEMBLY -(.020 Oversize) (-Used Before Code Date 21052000)
25	595076		PISTON ASSEMBLY -(-Used After Code Date 21051900)
25	595229		PISTON ASSEMBLY -(.010" Oversize) (-Used After Code Date 21051900)
25	595230		PISTON ASSEMBLY -(.020" Oversize) (-Used After Code Date 21051900)
26	590661		SET, Ring -(Standard)
26	590742		SET, Ring -(.010 Oversize)
26	590744		SET, Ring -(.020 Oversize)
27	590664		LOCK, Piston Pin
28	590663		PIN, Piston
29	590665		ROD, Connecting
37	590642		GUARD, Flywheel -Used Before Code Date 18031500
37	595436		GUARD, Flywheel -Used After Code Date 18031400
37A	592260		GUARD, Flywheel
46	590611		CAMSHAFT
78	590643		SCREW -(Flywheel Guard) -Used Before Code Date 18031500
78	590850		SCREW -(Flywheel Guard) -Used After Code Date 18031400
78A	590703		SCREW -(Flywheel Guard)
220	590677		WASHER -(Governor Gear) (.020" Thick)

Not For Reproduction

Copyright © Briggs & Stratton. All Rights reserved

Camshaft, Crankcase Cover, Crankshaft, Cylinder, Piston/Rings/Connecting Rod, Warning

Mfg. No: 106232-0142-H1

1319 WARNING LABEL	1319A WARNING LABEL	1036 EMISSIONS LABEL
REQUIRED *when replacing parts with warning labels affixed.*	***REQUIRED*** *when replacing parts with warning labels affixed.*	

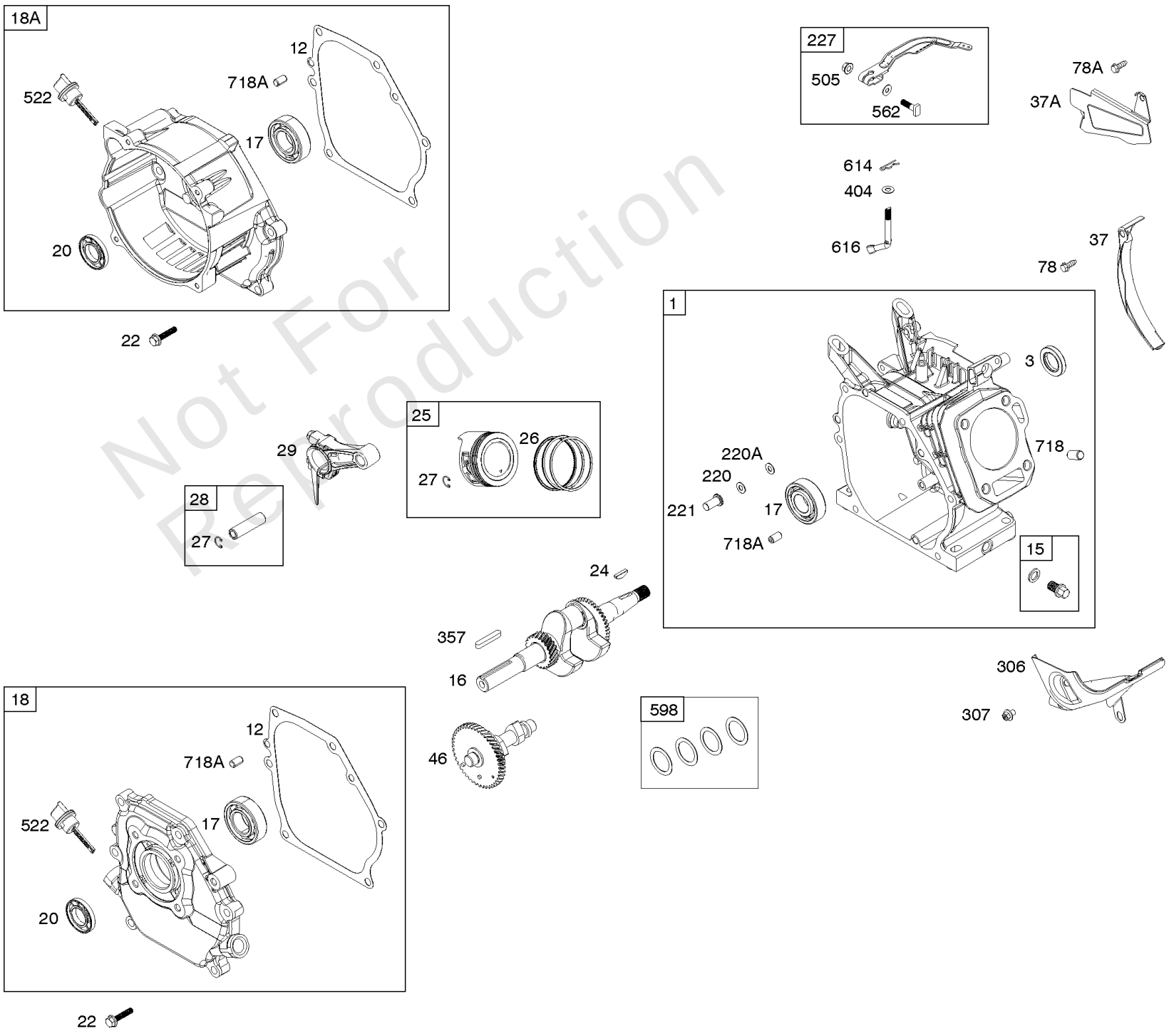

Not For Reproduction

REF NO	PART NO	QTY	DESCRIPTION
220A	590675		WASHER -(Governor Gear) (.040" Thick)
221	590676		CUP, Governor
227	590660		LEVER, Governor Control
306	590636		SHIELD, Cylinder
307	590683		SCREW -(Cylinder Shield)
357	798305		KEY, Drive Pulley
404	590669		WASHER -(Governor Crank)
505	590641		NUT -(Governor Control Lever)
522	590716		PLUG, Dipstick/Fill
562	590640		BOLT -(Governor Control Lever)
598	594475		SHIM, End Play -(Crankshaft or Camshaft Bearing) (Pump Applications Only)
614	590670		PIN, Cotter
616	590668		CRANK, Governor
718	590637		PIN, Locating -(Cylinder Head)
718A	590713		PIN, Locating -(Crankcase Cover)
1036	-----		Label-Emissions -(Available From A Briggs & Stratton Authorized Dealer)
1319	794467		LABEL, Warning
1319A	797669		LABEL, Warning

Not For Reproduction

Copyright © Briggs & Stratton. All Rights reserved

Mfg. No: 106232-0142-H1

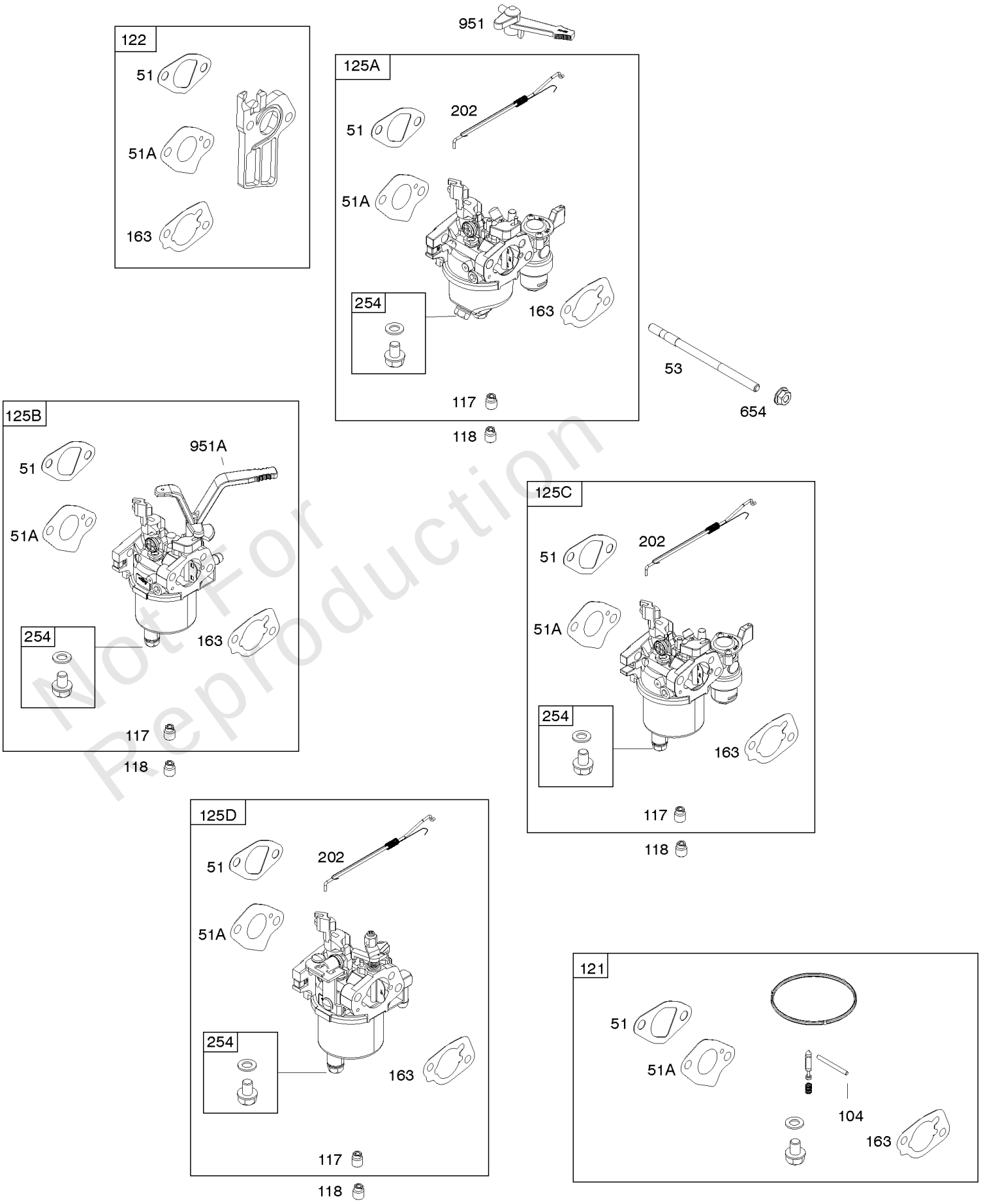

Not For Reproduction

Carburetor

REF NO	PART NO	QTY	DESCRIPTION
51	590612		GASKET, Intake
51A	590613		GASKET, Intake
53	590691		STUD -(Carburetor)
104	592486		PIN, Float Hinge
117	590928		JET, Main -(Standard)
118	593415		JET, Main -(High Altitude)
121	591770		KIT, Carburetor Overhaul
122	590615		SPACER, Carburetor
125A	591439		CARBURETOR -Used Before Code Date 13073000
125C	592902		CARBURETOR -Used After Code Date 13072900 -Used Before Code Date 16102000
125C	595649		CARBURETOR -Used After Code Date 16101900
163	590605		GASKET, Air Cleaner
202	590645		LINK, Mechanical Governor -Used Before Code Date 12030500
202	591438		LINK, Mechanical Governor -Used After Code Date 12030400
254	592493		DRAIN, Carburetor Bowl
654	590692		NUT -(Carburetor)
951	590614		LEVER, Choke
951A	591722		LEVER, Choke

Not For Reproduction

Copyright © Briggs & Stratton. All Rights reserved

Cylinder Head, Gasket Set

REF NO	PART NO	QTY	DESCRIPTION
3	590712		SEAL, Oil -(Magneto Side)
5	84002434		HEAD, Cylinder -(-Used Before Code Date 21052000)
5A	84002435		HEAD, Cylinder -(-Used After Code Date 21051900)
7	590606		GASKET, Cylinder Head
12	590608		GASKET, Crankcase
13	590639		SCREW -(Cylinder Head)
20	590712		SEAL, Oil -(PTO Side)
33	590647		VALVE, Exhaust -(-Used Before Code Date 21052000)
33	591448		VALVE, Exhaust -(-Used After Code Date 21051900)
34	590646		VALVE, Intake -(-Used Before Code Date 21052000)
34	591447		VALVE, Intake -(-Used After Code Date 21051900)
35	590650		SPRING, Valve -(Intake)
36	590650		SPRING, Valve -(Exhaust)
40	590654		RETAINER, Valve
45	590657		TAPPET, Valve
51	590612		GASKET, Intake
51A	590613		GASKET, Intake
155	592874		PLATE, Cylinder Head
163	590605		GASKET, Air Cleaner
238	590649		CAP, Valve
296	590631		STUD -(Muffler)
358	590748		GASKET SET, Engine
718	590637		PIN, Locating -(Cylinder Head)
830	590653		STUD, Rocker Arm
868	590648		SEAL, Valve -(Intake)
883	590630		GASKET, Exhaust
914	590850		SCREW -(Rocker Cover)
1022	590610		GASKET, Rocker Cover
1023	592903		COVER, Rocker
1026	590658		ROD, Push
1029	590651		ARM, Rocker

Not For Reproduction

Copyright © Briggs & Stratton. All Rights reserved

Exhaust System, Fuel Supply

Mfg. No: 106232-0142-H1

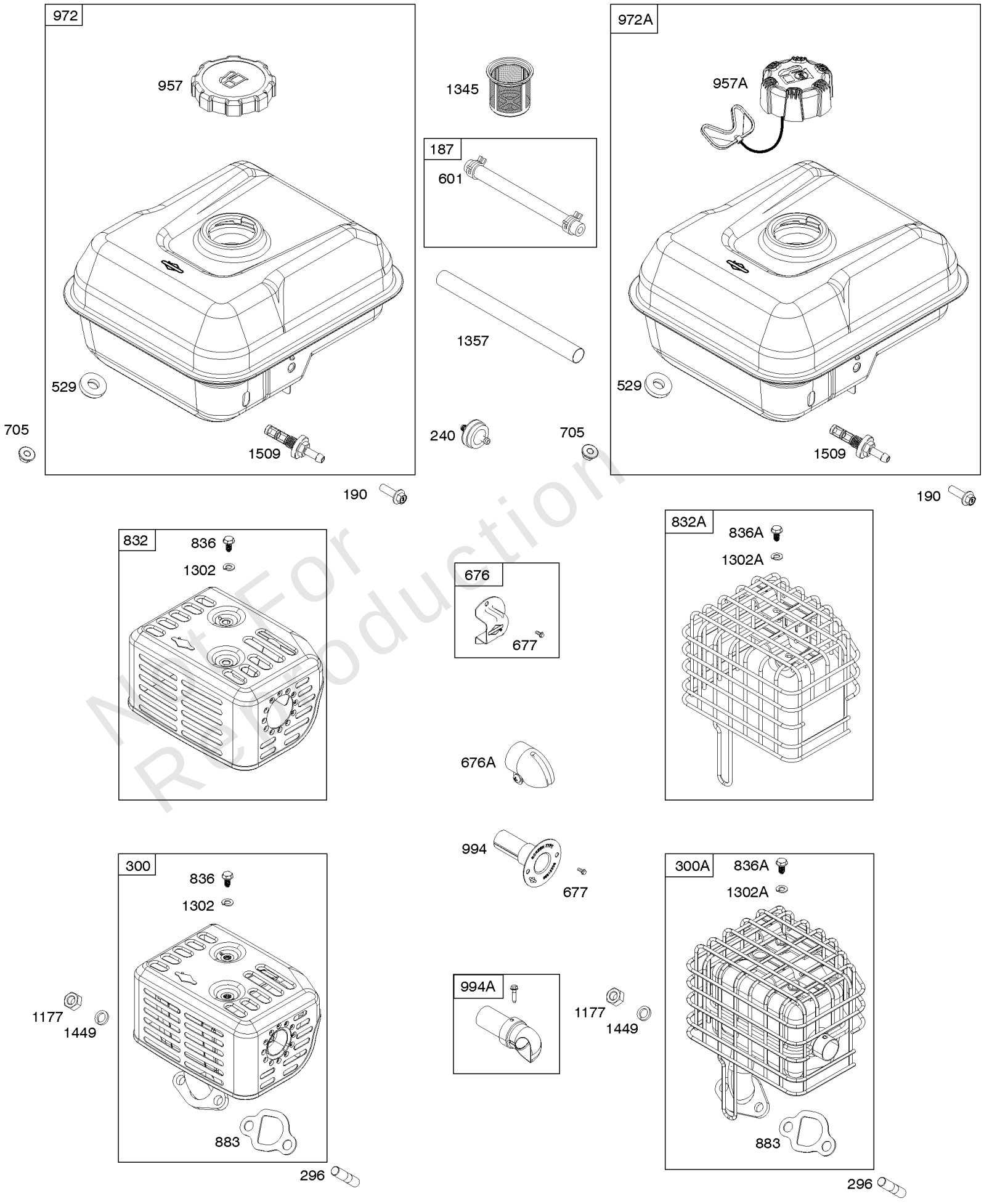

Not For Reproduction

Exhaust System, Fuel Supply

REF NO	PART NO	QTY	DESCRIPTION
187	791766		LINE, Fuel -(Cut To Required Length)
190	590643		SCREW -(Fuel Tank)
240	394358S		FILTER, Fuel
296	590631		STUD -(Muffler)
300	590709		MUFFLER
300A	591618		MUFFLER
529	590687		GROMMET -(Fuel Tank)
601	791850		CLAMP, Hose
676	590723		DEFLECTOR, Muffler
676A	591711		DEFLECTOR, Muffler
677	590720		SCREW -(Muffler Deflector)
705	590692		NUT -(Fuel Tank)
832A	591619		GUARD, Muffler -Used After Code Date 12091700
832A	797688		GUARD, Muffler -Used Before Code Date 12091800
836	590711		SCREW -(Muffler Guard)
836A	590850		SCREW -(Muffler Guard)
883	590630		GASKET, Exhaust
957	794641		CAP, Fuel Tank
972	593910		TANK, Fuel
994	596666		ARRESTOR, Spark
994A	592551		ARRESTOR, Spark
1177	590632		NUT -(Muffler)
1302	596668		WASHER -(Muffler Guard)
1302A	590457		WASHER -(Muffler Guard)
1345	792917		FILTER, Filler Neck
1357	590688		SLEEVE, Fuel Line
1449	590633		WASHER -(Muffler)
1509	797346		OUTLET, Tank

Not For Reproduction

Replacement Engine - US & Canada

REF NO	PART NO	QTY	DESCRIPTION
	-----		Top No-Load Speed: 3600 -Trim: ALL
	-----		Service Note: For all Go-Karts use only a Model 136200 series engine as a replacement, regardless of the original Model.

Not For Reproduction

Copyright © Briggs & Stratton. All Rights reserved