BougeRV

USER MANUAL

For 79 Quart Portable Refrigerator

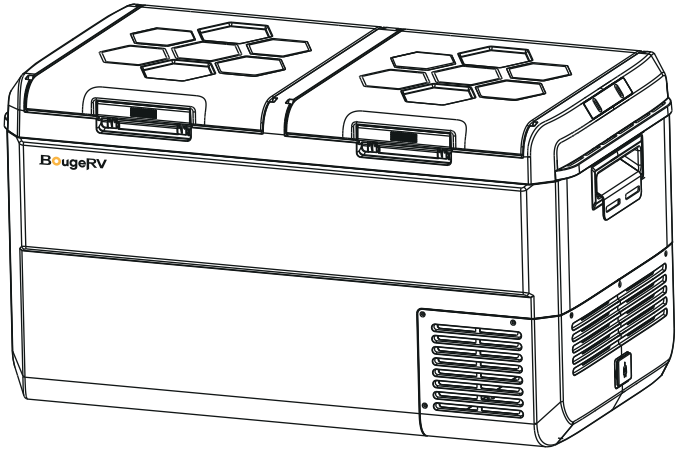

Please read this manual carefully before use and keep it properly for further reference.

V01

Contents

1. Package Contents ----------Page1

2. Safety Instructions ----------Page2

3. Preparing Before Use ----------Page3

4. Product Introduction ----------Page3

4.1 Product Features ----------Page3

4.2 Product Size ----------Page4

4.3 Product Structure ----------Page6

5. Reversing the Door Swing ----------Page6

6. Operation Instruction ----------Page7

6.1 Panel Instruction ----------Page7

6.2 Temperature setting ----------Page7

6.3 Setting Mode ----------Page8

6.4 ECO & MAX mode ----------Page8

6.5 Fahrenheit/Celsius Switching ----------Page8

7. Car battery Protection(H/M/L)Voltage Reference ----------Page9

8. Troubleshooting and Error Code Problems ----------Page10

9. Cleaning and Maintenance ----------Page12

10. FAQ ----------Page13

11. FCC STATEMENT ----------Page15

12. Warranty ----------Page16

13. Specification ----------Page17

1. Package Contents

Portable Refrigerator

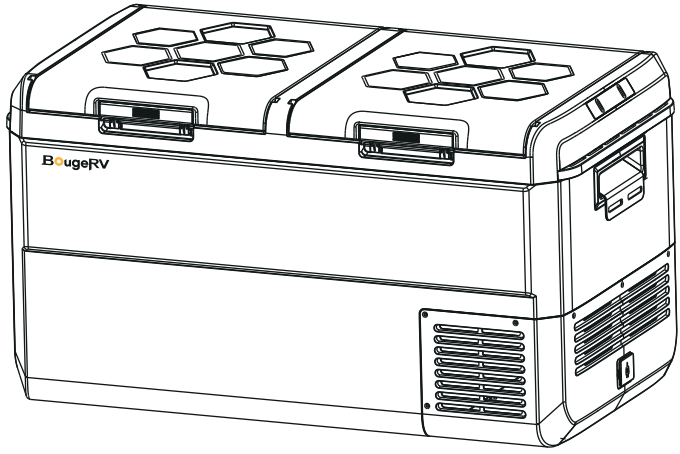

User Manual

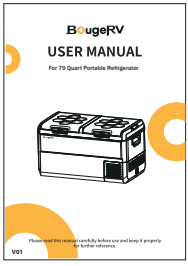

12/24V DC
Power Cord

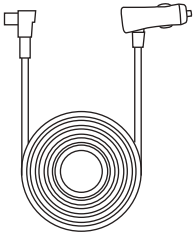

100~240V AC
Adapter

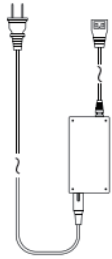

Removable Basket x 2

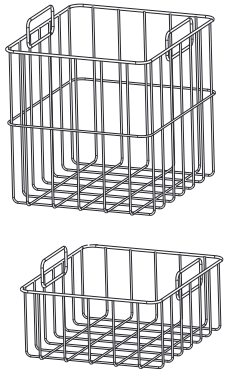

2. Safety Instructions

WARNING! Failure to comply with these warnings may cause your device to malfunction and may result in injury to you and other users.

- DO NOT use the device if it is visibly damaged.
- DO NOT block the gaps of the device with things like pins, wire, etc.
- DO NOT expose the device to rain or submerge it in water.
- DO NOT place the device near open flames or other sources of heat, such as heaters, direct sunlight, gas stoves, etc.
- DO NOT store explosive substances in the device, such as spray cans with flammable propellants, etc.
- Before powering on the device, ensure the power cord and plug are dry.
- Check whether the voltage specification on the nameplate matches that of the energy supply.
- Before powering on for the first time, ensure that the device has been left flat for 12 hours. (Condition: door located at the top.)
- Ensure that the device stays horizontal when it is running. The tilt angle must be less than 5° for long-term work and less than 45° for short-term work.
- The device must be well-ventilated to allow for heat dissipation and ensure that there is space around the cooling vents. (Back space≥7.9 in, side space≥3.9 in)
- The device can only be repaired by qualified personnel. Improper repairs may lead to safety hazards. If the power cable is damaged, it must be replaced by the manufacturer, customer service, or a similarly qualified person in order to prevent safety hazards.
- Do not use mechanical devices or other means to accelerate the defrosting process, other than those recommended by the manufacturer.
- Do notuse electrical appliances inside the food storage compartments of the appliance, unless they are of the type recommended by the manufacturer.
- Do not locate multiple portable socket- outlets or portable power supplies at the rear of the appliance.
- When positioning the appliance, ensure the supply cord is not trapped or damaged.


If symbol ISO 7010 W021 (2019-07) is used, its meaning shall be explained.


Warning: Risk of fire / Flammable materials

NOTICE!

- This appliance can be used by children aged 8 years and above and persons with reduced physical, sensory, or mental capabilities or lack of experience and knowledge if they've been given supervision and instruction concerning the use of the appliance in a safe way and understand the hazards involved.
- Children must be supervised to ensure that they do not play with the device.
- The installation of DC power in the boat must be handled by qualified electricians.

• Never pull the plug out of the socket by pulling the cord.
• Disconnect this device or turn it off when you turn your car engine off. Otherwise, it could drain your car's battery.

CAUTION!

• Before placing food in the fridge, it is advisable to keep it in its original packaging or keep it in a suitable storage box.
• Set the right temperature for the food you are putting in the fridge. The table below shows the recommended temperatures for some common foods.

The recommended temperature for common food:

						
Drinks	Fruits	Vegetable	Delicatessen	Wine	Ice Cream	Meat
41°F/5°C	41~46°F/5~8°C	37~50℉/3~10℃	39°F/4°C	50°F/10°C	14°F/-10°C	0°F/-18°C

3. Preparing Before Use

- Open the package and take out all accessories. After that, allow the fridge to sit flat for 12 hours before powering up.
- When using it for the first time, clean the inside and the outside of the fridge with a damp cloth and wait until it gets dry.
- Place the fridge in a suitable position according to your usage scenario (Car, Truck, RV, Camper, Van, Jeep, SUV, Boat, Home, etc.)
- Choose the correct power cord (AC adapter or DC cord) according to the power source you are using. Please read 5.1 Power Supply carefully for details.

4. Product Introduction

4.1 Product Features

Multiple Usage Scenarios: You can use this fridge in a variety of vehicles such as SUV, Truck, RV, Camper, Jeep, Van, Boat, etc. It can also be used for outdoor activities such as camping, tailgating, road trips, outdoor trips, and off-road. The fridge can also be used when at home.
Freezer or Refrigerator: With an adjustable temperature range from -4°F to 68°F, it can be used as a freezer or refrigerator.

2 Cooling Modes: MAX mode and ECO mode. MAX mode is used for fast cooling, and the rated power of it is 45W. ECO mode is used to save energy, and the rated power of it is 36W.
Energy Efficiency: No matter whether the fridge is in MAX mode or ECO mode, it consumes far less than 1kWh per day for its intelligent cycle work.

Fast Cooling with Compressor Refrigeration Technology: When set to Max mode and it's in an empty box, the fridge can cool from 77°F to 32°F in 15 minutes, and can cool from 77°F to -4°F in 50 minutes.

3-Level Battery Protection Function: the battery monitor will shut off the fridge/freezer as soon as the supply voltage falls below the set level.

45dB Low Noise: This fridge has a low-noise design that will not disturb you when driving or sleeping.
Power-Off Memory Function: When the fridge is turned on again after a power failure, the settings will remain the same as the last time it was set.

4.2 Product Size

CRS 79QT

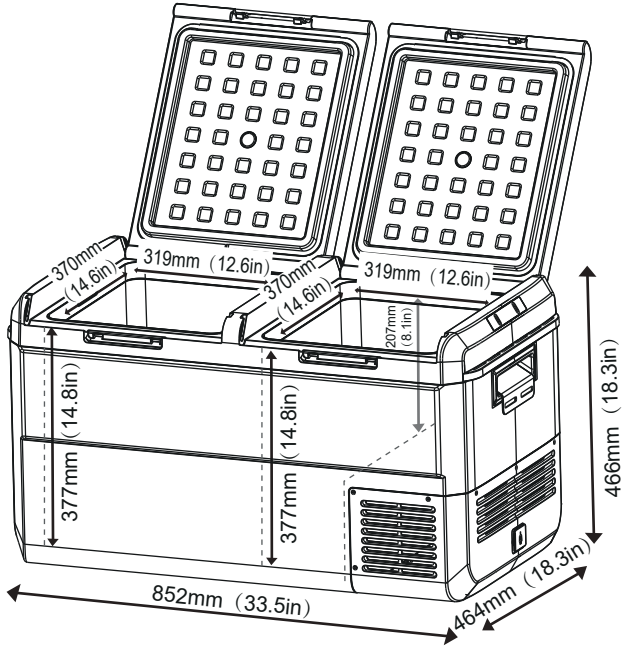

4.3 Product Structure

① Lid Latches
② Sealing Rubber Ring
③ Control Panel
④ Carry Handle
⑤ Power Input Panel
⑥ Removable Basket
⑦ Fixing hook
⑧ Heat Dissipation Hole
⑨ The drain hole

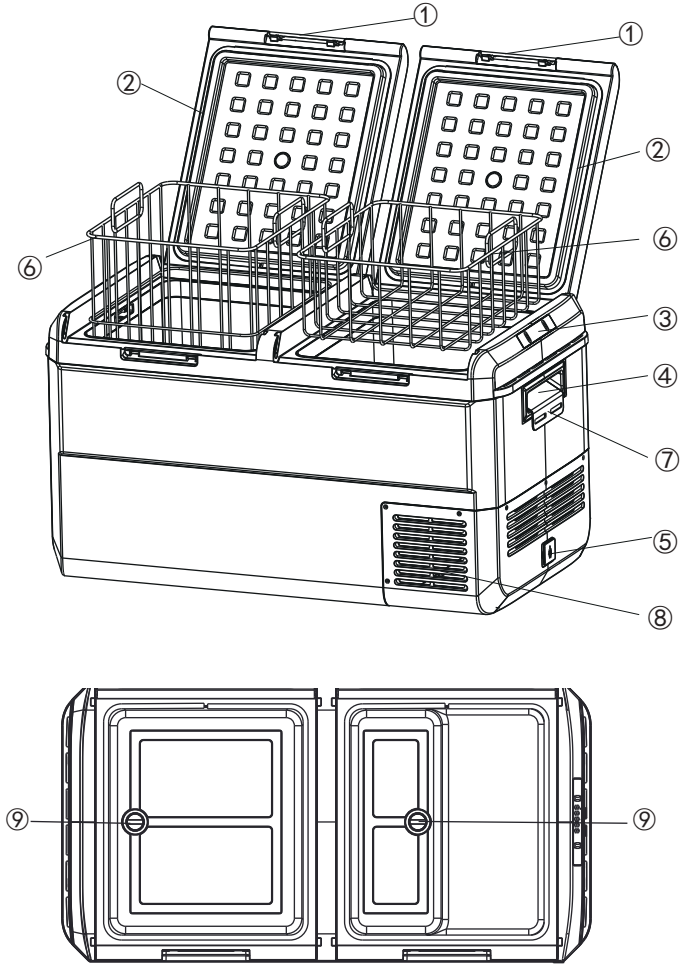

5. Reversing the Door Swing

*The door can be reversed in the same way with and without wheels.

1. Set the door to open at a 60-degree position.
2. Take out the door along the track.
3. Reversing the direction of the door.
4.When reassembling, tilt the door to a 60-degree as you slide it along the track.

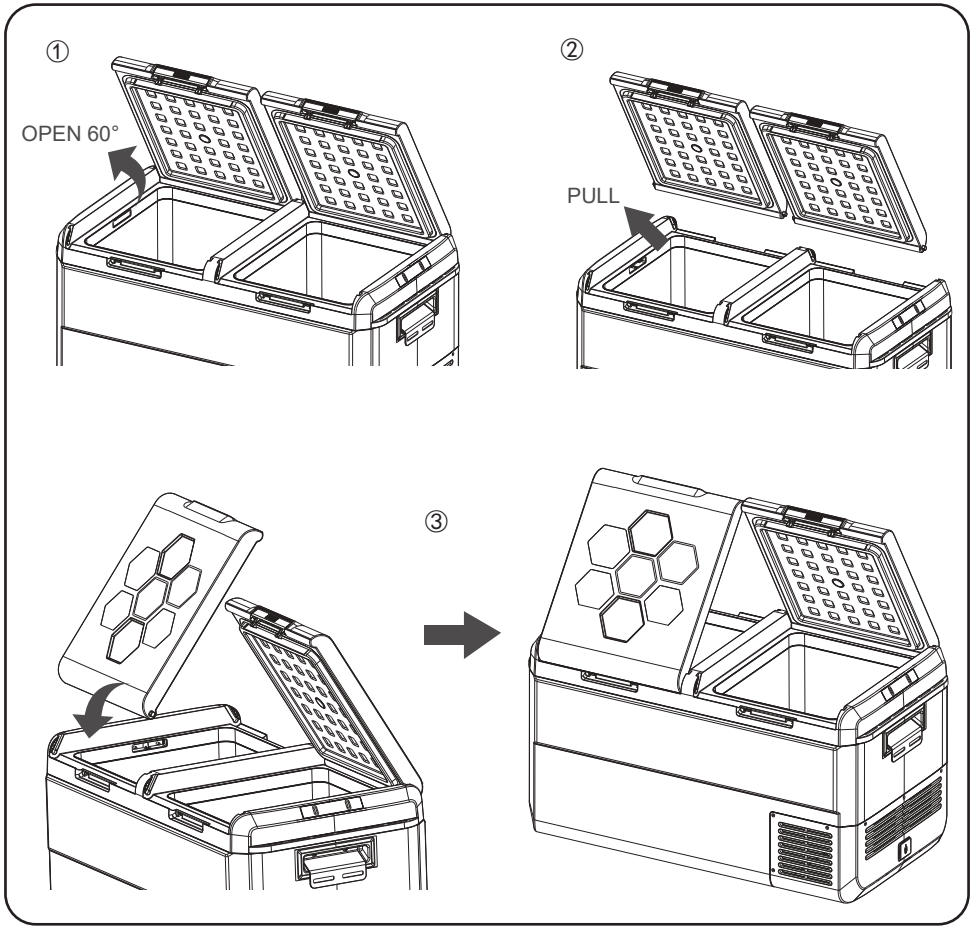

6.Operation Instruction

6.1 Pantle Instruction

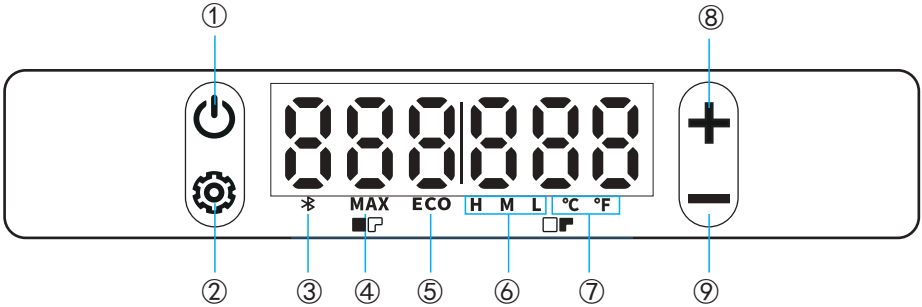

① Power Button

② Settings Button

③ APP Mode

④ MAX Mode

⑤ ECO Mode

⑥ Battery Protection Mode

⑦ Fahrenheit/Celsius Mode

⑧ Increase Temperature Button

⑨ Decrease Temperature Button

6.2 Temperature setting

Single Compartment Mode:
Press the Setting button ⚙ once, then use " + " or " - " buttons to adjust the temperature.

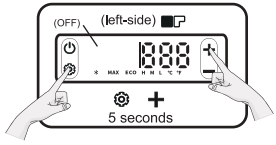

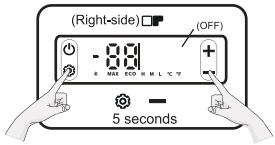

Double Compartment Mode:
1. Press the Setting button ⚙ to select the left or right compartment (the selected display flashes)
2. Use " + " to increase or to " - " decrease the temperature.
3.Wait 5 seconds for the settings to be saved automatically.

6.3 Setting Mode	**1. Hold down the setting button for 2 seconds to enter the setting menu.** **2. While the display is flashing, press the setting button to cycle through below setting modes. MAX/ECO mode – Triple Battery Protection Operation – Fahrenheit/Celsius Switching.** **3. Press the " + " or " - " buttons to navigate through the different modes within a group.** **4. After switching, wait for 5 seconds to confirm the setting.**
6.4 ECO & MAX mode	**MAX mode boosts efficiency, while ECO mode focuses on energy savings.**
6.5 Fahrenheit/Celsius Switching	**To switch between °C and °F on the display.**

7. Car Battery Protection(H/M/L) Voltage Reference

The BougeRV fridge is equipped with a battery preservation monitor. It has 3 settings to monitor your battery to prevent a full discharge. The higher level you set, the higher the cut-off voltage will be. When the vehicle battery's voltage drops to the below setting, the fridge compressor will automatically turn off.

• When set to HIGH, the battery monitor will provide maximum protection for the vehicle battery running the fridge against over/full discharge.

• When set to "Low", the battery monitor will allow the refrigerator to use more of the battery energy.

Voltage		Factory default voltage protection level sets to M Mode		
		High mode	Medium Mode	Low mode
12V DC	Cut out	11.1V	10.4V	9.6V
	Cut in	12.4V	11.7V	10.9V
24V DC	Cut out	24.3V	22.8V	21.3V
	Cut in	25.7V	24.2V	22.7V
NOTE: Cut-out is the input voltage in which the fridge will turn off. Cut-in is the input voltage in which the fridge will turn on.				

• When the fridge is powered by a vehicle starter battery, High Mode is recommended.

• When the fridge is powered by an additional battery(portable power station, solar panel), High Mode is recommended.

NOTE

The battery monitor will shut off the fridge as soon as the supply voltage falls below the set level. The fridge will restart after 2 minutes once the cut-in voltage is reached.

8. Troubleshooting and Error Code Problems

If an abnormal situation cannot be resolved through the guidance, please contact professional customer service for assistance.

If you bought it from Amazon, please contact **service@bougerv.com.**
If you bought it from BougeRV Website, please contact **support@bougerv.com.**

NOTE
To better address the issue, it will be better to attach more details as follows in your email.

1. The order number(it is necessary).
2. If possible, pictures or video to show the problem.
3. Which power cord is used to connect the fridge and what is the power supply.
4. If there is an error code display on the digital panel.
5. Your shipping address and phone number for replacement.

Troubles	Causes and solutions
The Car Refrigerator Does Not Work	• Check whether the power is connected correctly or not (the plug is loose, positive and negative poles are reversed, etc.). • Check whether the refrigerator is turned on. • Check whether the cooling ventilation is normal. • Check whether the fuse is blown.
Not Cooling Sufficiently	• Check whether the fridge door is closed properly. • Check whether the door seal is damaged or deformed, resulting in unsealed. • Check whether the heat dissipation and ventilation are working normally. • Check whether the temperature setting is proper.
Abnormal Noise	• Some noises are normal. • Check whether the refrigerator is placed stably. • Check whether the refrigerator hit the wall or other items. • Loose or disconnected internal parts.

Condensation on the surface of the refrigerator	When the ambient air humidity is >75%, a slight frost will occur on the surface of the cabinet, which is a normal phenomenon.
Temperature Fluctuation	• It is normal for the temperature to fluctuate within a certain range(±9°F). • It is normal for the temperature measured by yourself to be 6°F higher than the displayed temperature. • If the temperature does not drop over time , please empty the refrigerator and adjust it to the lowest temperature and allow the refrigerator to take longer to cool. • Please try to touch the inner wall of the refrigerator with your hand, if you can feel the coldness obviously, it indicates that the refrigerator refrigeration is normal.

The definition of the error code on the display

Error Code	Description	Solution
E1	Low battery voltage	Check battery voltage and switch to Low voltage cut-off as required
E2	Fan failure	Contact after-sales service
E3	Motor failure	Ensure the air vents are unobstructed. Move fridge to cooler location. (Ambient temperature may be too high)
E4	Minimum motor speed error	
E5	The unit is overloading	
E6	NTC failure (open-circuit/short-circuit)	
E7	Communication failure between the display board and its module.	Contact after-sales service
E9	Abnormal phase current of compressor module	Ensure the air vents are unobstructed. Move fridge to cooler location. (Ambient temperature may be too high)

9. Cleaning and Maintenance

■ Cleaning

• Unplug the device first to avoid electric shock.
• Use a wet cloth to clean the device and dry it.
• Do not soak the device in water and do not wash it directly.
• Never use abrasive products, detergents, or soaps to clean the device as these can damage the device.

■ Storage

If the device will not be in use for a long time, please store it properly.
• Turn off the power and remove the plug.
• Remove all the items stored in the device.
• Wipe off excess water from the device with a soft rag. Always make sure the inside of the device is dry before you store it.
• Place the device in a cool and dry place.
• Leave the lid slightly open to prevent odors from forming.

■ Defrosting

Frost may form inside the cooling device or on the evaporator, and this can reduce the cooling capacity. Defrost the device promptly to avoid this.
• Disconnect the power supply of the device.
• Take out all the items.
• Keep the lid open.
• Wipe off the defrosted water.

DO NOT use hard, sharp, or pointed objects to remove the frost or use them to help you remove the frozen items. This may cause irreparable damage to the cooling system.

10. FAQ

Q1: Is there a cover for this refrigerator?

A1: Yes, there is. You could search for bougerv 23/30 quart fridge cover on Amazon.

Q2: Will it work standing on end?

A2: No, please do not run it on its side. This refrigerator contains refrigerant. If it runs on the side, the cooling efficiency will be affected and may cause malfunctions.

Q3: Can the fridge be used to sit on for extra seating?

A3: We do not recommend doing this. Because the perimeter of the refrigerator is filled with foam(for heat retention) rather than solid plastic, prolonged exposure to weight may deform it.

Q4: What's the outside temperature range this can be safely used?

A4: Temperature range: 50°F~122 °F.

Q5: Does the fridge have to be plugged in for use?

A5: Yes, it has to be plugged.

Q6: If the power is temporarily interrupted, will the unit automatically resume work when the power is restored(if nobody is there to turn it back on)?

A6: Yes, it will. This refrigerator has a power-off memory function, which means when the power is restored, the freezer will return to its previous working state.

Q7: Does the temperature fluctuate a lot?

A7: Not much, within the range of industry standards. The working mode of the refrigerator is cyclic work, that is, after it reaches the set temperature, it stops working for about 10 minutes, and the temperature rises by about 3~5°C. Then, the refrigerator will work again for about 15 minutes and the temperature will drop to the set temperature again.

Q8: How long can it continuously be run safetly?

A8: As long as the power supply is maintained, our portable refrigerators can work 24 hours/day, just like home refrigerators.

Q9: Is it normal for the refrigerator to have condensation water? Why?

A9: Yes, it is normal. Because when the air humidity is greater than 75%, there may be slight condensation on the surface of the refrigerator; the higher the humidity, the higher the probability of occurrence, which is a normal phenomenon.

Q10: Will it keep ice cream frozen?

A10: Yes. By setting the temperature below 0°F, you can keep the ice cream frozen.

Q11: Can I make ice with ice cube trays?

A11: Yes. The internal temperature of this portable refrigerator is adjustable from -8°F to 68°F. You can get ice cubes by setting the temperature below 32°F.

Q12: Can I get a replacement if my accessory is missing/broken?

A12: Sure, we provide a 2-year warranty from the date of purchase.

11. FCC STATEMENT

This device complies with Part 15 of the FCC Rules. Operation is subject to the following two conditions:
(1) This device may not cause harmful interference, and
(2) This device must accept any interference received, including interference that may cause undesired operation.
Warning: Changes or modifications not expressly approved by the party responsible for compliance could void the user's authority to operate the equipment.

NOTE: This equipment has been tested and found to comply with the limits for a Class B digital device, pursuant to Part 15 of the FCC Rules. These limits are designed to provide reasonable protection against harmful interference in a residential installation.
This equipment generates uses and can radiate radio frequency energy and, if not installed and used in accordance with the instructions, may cause harmful interference to radio communications. However, there is no guarantee that interference will not occur in a particular installation. If this equipment does cause harmful interference to radio or television reception, which can be determined by turning the equipment off and on, the user is encouraged to try to correct the interference by one or more of the following measures:

- Reorient or relocate the receiving antenna.
- Increase the separation between the equipment and receiver.
- Connect the equipment into an outlet on a circuit different from that to which the receiver is connected.
- Consult the dealer or an experienced radio/TV technician for help.

FCC and ISED Radiation Exposure Statement
This equipment complies with FCC and ISED radiation exposure limitsset forth for an uncontrolled environment, This equipment shouldbe installed and operated with minimum distance 20cm betweenthe radiator & your body.

12. Warranty

Warranty

BougeRV Portable Car Refrigerators are covered by a 2-year warranty starting from the date of purchase on the BougeRV Amazon store or the BougeRV official website, with the following exceptions:

- Man-made damage.
- Damage caused by force majeure such as earthquake, conflagration, etc.
- Damage caused by improper use or violation of this instruction.
- Damage or malfunction caused by disassembly.

24-month Limited Warranty
Lifetime Technical Support

Customer Service

If you encounter any difficulties in using the product or have any questions about it, please feel free to contact us via:

+1 408 656 8402 (US)
9AM-6PM(CST)Monday-Friday, Closed on federal holiday

BougeRV Amazon:
service@bougerv.com

BougeRV Website:
support@bougerv.com

VIP Service & Extra 1-year Warranty

1. Search "QR Code" on your FB.
2. Scan the QR Code beside.
3. Join "BougeRV Car Refrigerator Club".
4. Then you become a VIP and get a 3-year warranty.

13. Specification

Model	CRS07502
Rated Voltage	DC: 12V/24V
	AC: 100-240V
Rated Power Input	70W
Capacity	79 Quart = 75L 2.65 cu.ft = 75L
Noise Level	⩽51dB
Climate Class	T/ST/N/SN
Temperature Range	-4℉ to 68℉(-20℃ to+20℃)
Refrigerant	R600a

* Due to product improvement, the technical information might be different from the actual information, please refer to the rating label on the product.

■ Disposal

Place the packaging material in the appropriate recycling waste bins wherever possible.



If you wish to permanently dispose of the product, consult your local recycling center or specialty distributor for details on how to dispose of it in accordance with applicable disposal regulations.

Explore more from BougeRV

@bougerv

@Bougervofficial

BougeRV