Body-Solid®

Built for Life

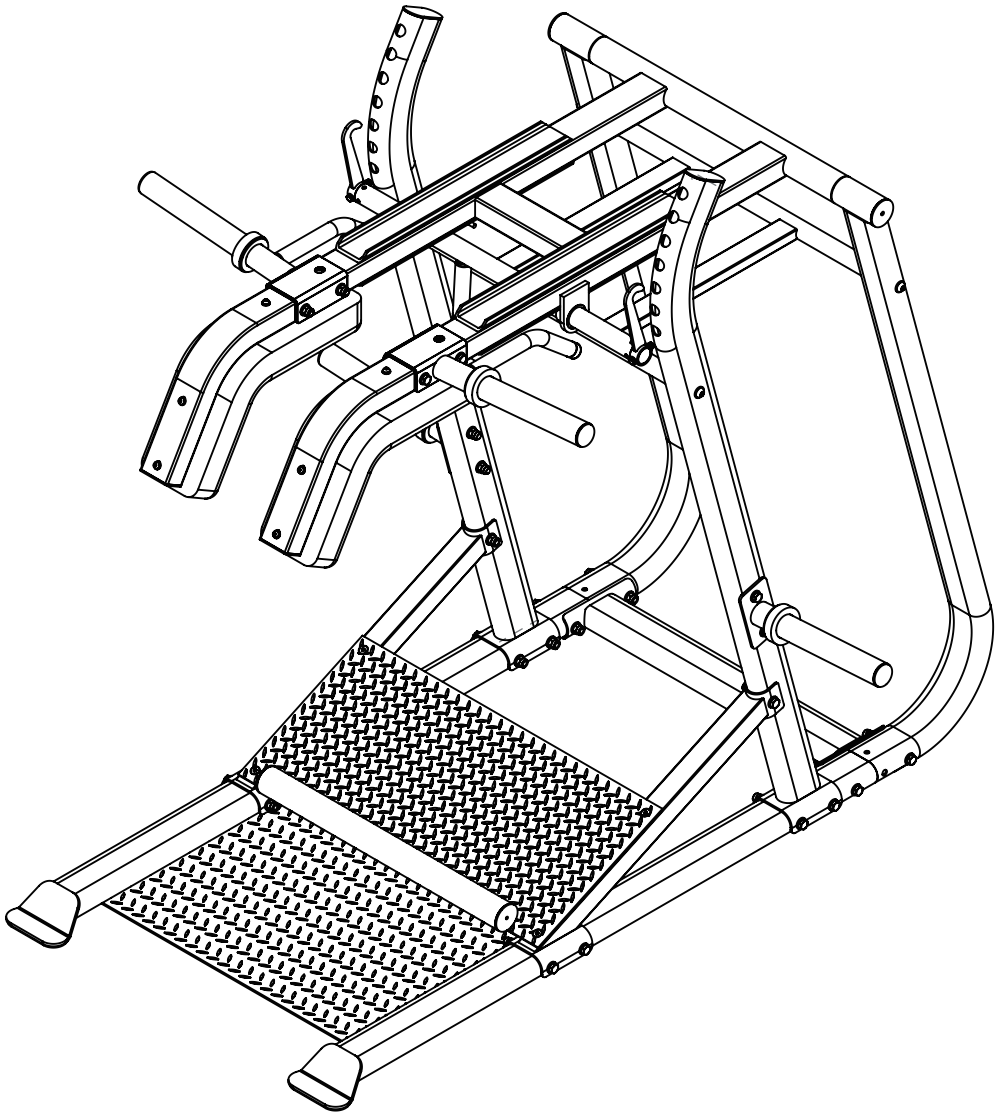

SLS500B

Assembly & Instructions

OWNER'S MANUAL

V. SLS500B-111823

Be sure that all users carefully read and understand all warning, safety and maintenance labels on the machine before each use. Failure to do so may result in death or serious injury.

It is imperative that you retain this Owner's Manual and be sure all warning labels are legible and intact. Replacement Owner's Manuals and warning labels are available from your local Body-Solid dealer.

If you have any questions about the operation, set up or maintenance of this machine please call our customer service department at 1 (800) 556-3113.

THERE IS A RISK ASSUMED BY INDIVIDUALS WHO USE THIS TYPE OF EQUIPMENT. TO MINIMIZE RISK, YOU MUST FOLLOW THESE RULES:

1. Inspect equipment before each workout. Check that all nuts, bolts, screws and pop pins are in place and fully tightened. Also, check cables for signs of wear.Replace all worn parts immediately. Never use machine if any parts are damaged or missing.
   FAILURE TO FOLLOW THESE RULES MAY RESULT IN SEROUS INJURY.
2. Keep clear of the cables and all moving parts when the machine is in use.
3. Always make sure all Snap Links are closed when doing any cable/pulley/strap exercises.
4. Exercise with care. Perform your exercises at a smooth moderate pace; never perform jerky or uncoordinated movements that may cause injury.
5. It is recommended that you should workout with a training partner.
6. Do not allow children or minors to play on or around this equipment.
7. If unsure of proper use of equipment, call your local Body-Solid distributor or the Body-Solid customer service department 1-800-556-3113.
8. WARNING: Consult your physician before starting your exercise program. For your own safety, do not begin any exercise program without proper instruction. RAL8-6-03 **WC-54**

MAINTENANCE SCHEDULE

Check the function and integrity of the following components. As noted, inspect equipment before each workout. Replace all damaged, broken or worn components immediately.

		DAILY	WEEKLY
Cables:	Check tension, end fittings, and coating	✓	
	Check that locking nut at weight stack is tight		✓
Upholstery:	Wipe down and dry	✓	
	Clean and condition		✓
Frame:	Wipe down and dry	✓	
	Polish / Wax		✓
Chrome:	Wipe down and dry	✓	
	Polish / Lubricate		✓
Nut / Bolts / Fasteners: Tighten and / or adjust as needed			✓
Guide Rods: Lubricate and clean			✓
Linear Rods: Lubricate and clean			✓
Seat Sleeves: Lubricate and clean			✓
Adjustments / Locking Pins / Tightening Knobs			✓
Weight Stack Pins			✓
Warning Instruction Labels			✓
Springs / Pop Pins		✓	
Anti Skid Surfaces			✓
Hand Grips / Rollers			✓

For Body-Solid Customer Service
Call 1-800-556-3113
#MSSTKR0808

WARNING

Safety and Maintenance of Cables

IMPORTANT: Cables are wear items. It is your responsibility to prevent unexpected breakage. **Cable inspection should be performed daily.** Inspect all cables, the nylon coating on all cables, and the area near fitting at each end of each cable. **Replace any damaged or worn cable immediately.** Do not allow the machine to be used until damaged or worn cables are replaced. Using or allowing a machine to be used with a suspect cable can result in serious injury. See Owner's Manual for more information.

For Body-Solid Customer Service
Call 1-800-556-3113

Table of Contents

- SAFETY INSTRUCTIONS..... PAGE 4
- PREPARATION..... PAGE 5
- HARDWARE LIST..... PAGE 6
- PARTS LIST..... PAGE 7
- HARDWARE ILLUSTRATION..... PAGE 8
- ASSEMBLY INSTRUCTIONS..... PAGE 12
- EXPLODED VIEW..... PAGE 22
- CONTACT PAGE..... PAGE 24

Important Safety Instructions

Before beginning any fitness program, you should obtain a complete physical examination from your physician.

Il est conseille de subir un examen medical complet avant d'entreprendre tout programme d'exercise.
Si vous avez des etourdissements ou des faiblesses, arretez les exercices immediatement.

Antes de comenzar cualquier programma de ejercicios, deberias tener un examen fisico con su doctor.

When using exercise equipment, you should always take basic precautions, including the following:

- Read all instructions before using the **SLS500B**. These instructions are written to ensure your safety and to protect the unit.
- **Do not remove any safety labels from the machine.**
- Do not allow children on or near the equipment.
- Use the equipment only for its intended purpose as described in this guide. Do not use accessory attachments that are not recommended by the manufacturer. Such attachments might cause injuries.
- Wear proper exercise clothing and shoes for your workout, no loose clothing.
- Keep hands, limbs, loose clothing, and long hair well out of the way of all moving parts.
- Use care when getting on or off the unit.
- Do not overexert yourself or work to exhaustion.
- If you feel any pain or abnormal symptoms, stop your workout immediately and consult your physician.
- Never operate unit when it has been dropped or damaged. Return the equipment to a service center for examination and repair.
- Never drop or insert objects into any opening in the equipment.
- Always check the unit and its cables before each use. Make sure that all fasteners and cables are secure and in good working condition.
- Do not use the equipment outdoors or near water.

Personal Safety During Assembly

- Before beginning assembly, please take the time to read the instructions thoroughly.
- Read each step in the assembly instructions and follow the steps in sequence. Do not skip ahead. If you skip ahead, you may learn later that you have to disassemble components and that you may have damaged the equipment.
- Assemble and operate the **SLS500B** on a solid, level surface. Locate the unit a few feet from the walls or furniture to provide easy access.

The **SLS500B** is designed for your enjoyment. By following these precautions and using common sense, you will have many safe and pleasurable hours of healthful exercise with your Body-Solid **Pro Club Leverage Squat Machine.**
After assembly, you should check all functions to ensure correct operation. If you experience problems, first recheck the assembly instructions to locate any possible errors made during assembly. If you are unable to correct the problem, call the dealer from whom you purchased the machine or call **1-800-556-3113** for the dealer nearest you.

Obtaining Service

Please use this Owner's Manual to make sure that all parts have been included in your shipment. When ordering parts, you must use the part number and description from this Owner's Manual. Use only Body-Solid replacement parts when servicing this machine. Failure to do so will void your warranty and could result in personal injury.

For information about product operation or service, check out the official Body-Solid website at www.bodysolid.com or contact an authorized Body-Solid dealer or a Body-Solid factory-authorized service company or contact Body-Solid customer service at one of the following:

Toll Free: 1-800-556-3113
Phone: 1-708-427-3555
Fax: 1-708-427-3556
Hours: M-F 8:30-5:00 CST
E-Mail: service@bodysolid.com

Or write to:
Body-Solid, Inc.
Service Department
1900 S. Des Plaines Ave.
Forest Park, IL 60130 USA

Retain this Owner's Manual for future reference. If you need to order replacement parts please be prepared to provide the following information when contacting us so that we can assist you better.

1. Model Number
2. Place of Purchase
3. Serial Number (S/N)
4. Part # and Description

Preparation

Thank you for purchasing the **SLS500B**. This bench is part of the Body-Solid line of quality strength training machines, which lets you target specific muscle groups to achieve better muscle tone and overall body conditioning. To maximize your use of the equipment please study this Owner's Manual thoroughly.

Required Tools

The basic tools that you must obtain before assembling the **SLS500B** include but are not limited to:

- Metric Allen Key Set
- Standard Allen Key Set
- Standard Wrench Set
- Metric Wrench Set
- Adjustable Wrench
- Screwdriver (standard and/or phillips)

Installation Requirements

Follow these installation requirements when assembling the **SLS500B**:

Set up the **SLS500B** on a solid, flat surface. A smooth, flat surface under the machine helps keep it level. A level machine has fewer malfunctions.

Provide ample space around the machine. Open space around the machine allows for easier access.

Insert all bolts in the same direction. For aesthetic purposes, insert all bolts in the same direction unless specified (in text or illustrations) to do otherwise.

Leave room for adjustments. Tighten fasteners such as bolts, nuts, and screws so the unit is stable, but leave room for adjustments. Do not fully tighten fasteners until instructed in the assembly steps to do so.

Fill out and mail the warranty card.

Assembly Tips

Read all "Notes" on each page before beginning each step.

While you may be able to assemble the **SLS500B** using the illustrations only, important safety notes and other tips are included in the text.

Some pieces may have extra holes that you will not use. Use only those holes indicated in the instructions and illustrations.

NOTE: With so many assembled parts, proper alignment and adjustment is critical. While tightening the nuts and bolts, be sure to leave room for adjustments.

NOTE: The bottles that are marked "Poison" is your touch up paint. Keep away from children.

CAUTION: Obtain assistance! If you feel like you can't assemble the **SLS500B** by yourself then do not attempt to do so as this could result in injury. Review the installation requirements before proceeding with the following steps.

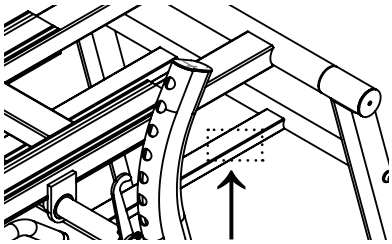

Your S/N# can be found here

Body-Solid continually seeks ways to improve the performance, specifications and product manuals in order to ensure that only superior products are released from our factories. Please take the time to carefully read through this manual thoroughly. Instructions contained in this document are not intended to cover all details or variations possible with Body-Solid equipment, or to cover every contingency that may be met in conjunction with installation, operation, maintenance or troubleshooting of the equipment. Even though we have prepared this manual with extreme care, neither the publisher nor the author can accept responsibility for any errors in, or omission from, the information given. Should additional information be required, or should situations arise that are not covered by this manual, the matter should be directed to your local Body-Solid representative, or the Service Department at Body-Solid Inc. in Forest Park, Illinois.

SLS500B Hardware List

Part#	Size	Description	Quantity
1	M12X130mm	HEX HEAD BOLT	12 PCS.
2	M12X105mm	HEX HEAD BOLT	4 PCS.
3	M12X80mm	HEX HEAD BOLT	6 PCS.
4	M12X30mm	BUTTON HEAD CAP SCREW	4 PCS.
5	M8X55mm	HEX HEAD BOLT	2 PCS.
6	M8X70mm	BUTTON HEAD CAP SCREW	8 PCS.
7	M6X20mm	BUTTON HEAD CAP SCREW	2 PCS.
8	M10X16mm	FLAT HEAD CAP SCREW	8 PCS.
9	M12	FLAT WASHER	48 PCS.
10	M8	FLAT WASHER	12 PCS.
11	M8	LOCK WASHER	8 PCS.
12	M12	NYLON LOCK NUT	22 PCS.
13	M8	NYLON LOCK NUT	2 PCS

SLS500B Parts List

Part#	Description	Quantity
A	FRONT BASE FRAME	2 PCS.
B	LEFT UPRIGHT	1 PCS.
C	RIGHT UPRIGHT	1 PCS.
D	RIGHT REAR BASE FRAME	1 PCS.
E	LEFT REAR BASE FRAME	1 PCS.
F	SUPPORT FRAME	1 PCS.
G	MIDDLE CENTER FRAME	1 PCS.
H	BASE PLATE	1 PCS.
J	SQUAT PLATE	1 PCS.
K	SQUAT FRAME	1 PCS.
L	ADJUSTMENT BAR	1 PCS.
M	RIGHT WEIGHT HORN	1 PCS.
N	LEFT WEIGHT HORN	1 PCS.
P	CENTER BASE FRAME	1 PCS.
Q	WEIGHT HORN	2 PCS.
14	BRACKET	2 PCS.
15	BEARING, ø52xø25x15mm	2 PCS.
16	RETAINING RING	2 PCS.
17	SHOULDER PAD	2 PCS.
18	RUBBER DONUT	4 PCS.
19	HAND GRIP, ø32xø25x300mm	2 PCS.
20	END CAP, ø32mm	3 PCS.
21	BUSHING, ø52xø42x13mm	2 PCS.
22	RING, ø48xø42x20mm	2 PCS.
23	HOOK	2 PCS.
24	HAND GRIP, ø32xø25x120mm	1 PCS.
25	FRONT FOOT PAD	2 PCS.
26	REAR FOOT PAD	2 PCS.

Part #1 HEX HEAD BOLT M12x130mm QTY. 12

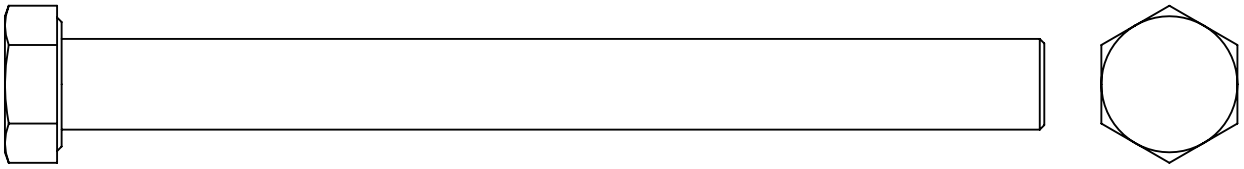

Part #2 HEX HEAD BOLT M12x105mm QTY. 4

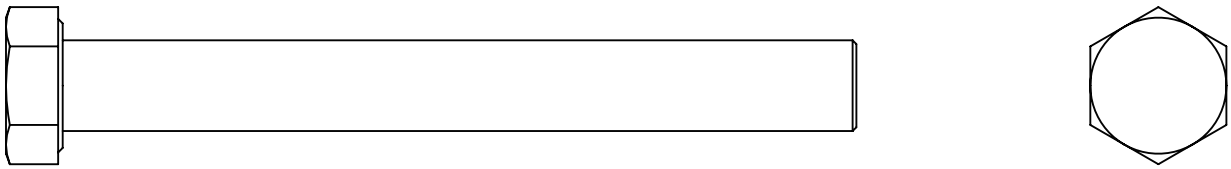

Part #3 HEX HEAD BOLT M12x80mm QTY. 6

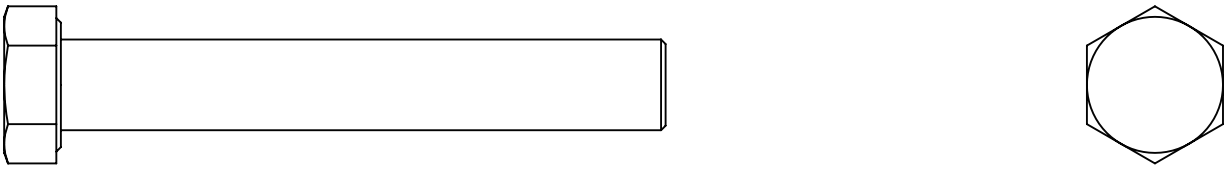

Part #4 BUTTON HEAD CAP SCREW M12x30mm QTY. 2



Part #5 HEX HEAD BOLT M8x55mm QTY. 2



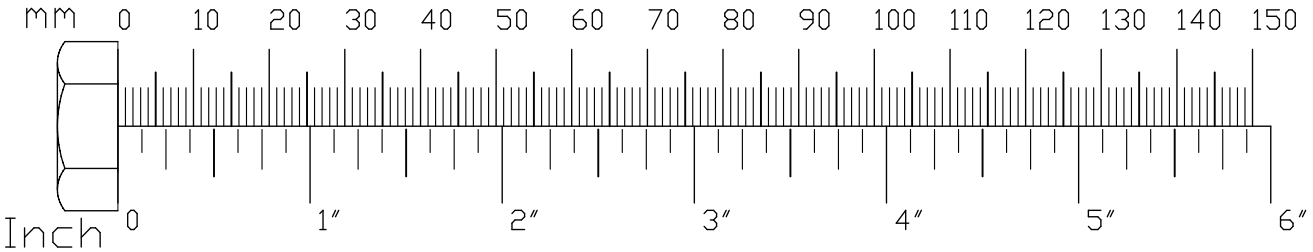

SLS500B Hardware Illustration

Part #6 BUTTON HEAD CAP SCREW M8x70mm QTY.8

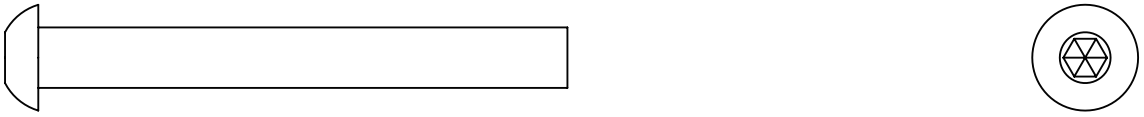

Part #7 BUTTON HEAD CAP SCREW M6x30mm QTY. 2



Part #8 FLAT HEAD CAP SCREW M6x30mm QTY. 8



Part #9 FLAT WASHER M12 QTY. 48



Part #10 FLAT WASHER M8 QTY. 12



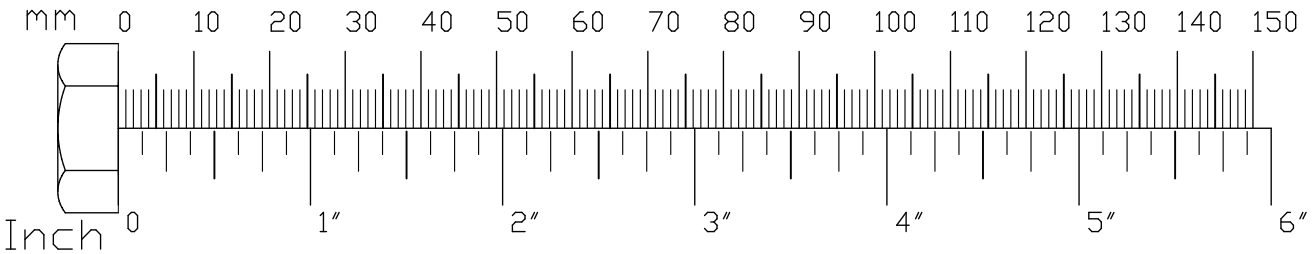

Part #11 LOCK WASHER M8 QTY. 8

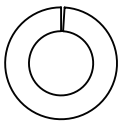



Part #12 NYLON LOCK NUT M12 QTY. 22

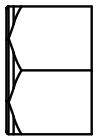

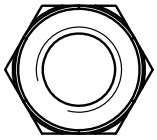

Part #13 NYLON LOCK NUT M8 QTY. 2

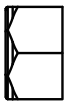



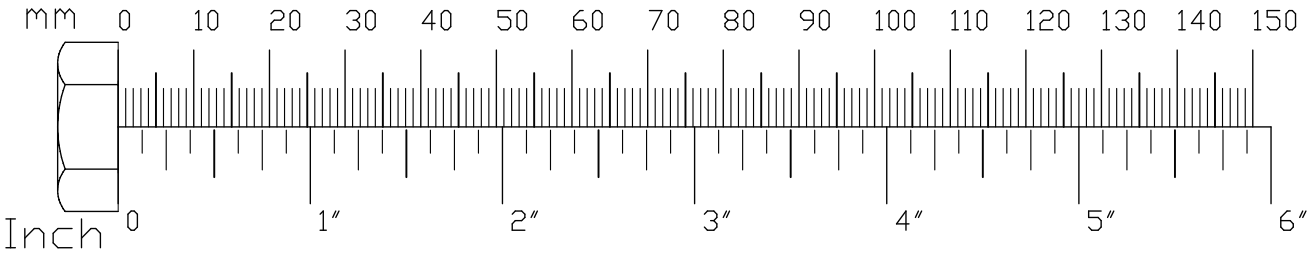

Notes

STEP 1

Be careful to assemble all components in the sequence they are presented.

NOTE:

Finger tighten all hardware in this step. DO NOT wrench tighten unless instructed. Some components may be pre-assembled. Nylon lock nuts will not fully screw onto bolts, they must be wrench tighten to fully go on.

1A. Attach Front Base Frame **(A)** to Right Rear Base Frame **(D)**

1B. Attach Front Base Frame **(A)** to Left Rear Base Frame **(E)**

1C. Attach Center Base Frame **(P)** to Rear Base Frames **(D &E)** and Front Base Frames **(A)** using:

4 - (#1) M12x130mm Hex Head Bolt
8 - (#9) M12 Flat Washer
4 - (#12) M12 Nylon Lock Nut
2 - (#14) Bracket

STEP 1

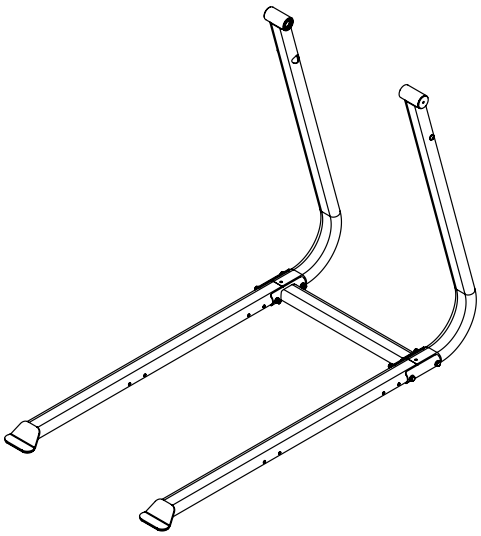

Above shows Step 1 assembled and completed.

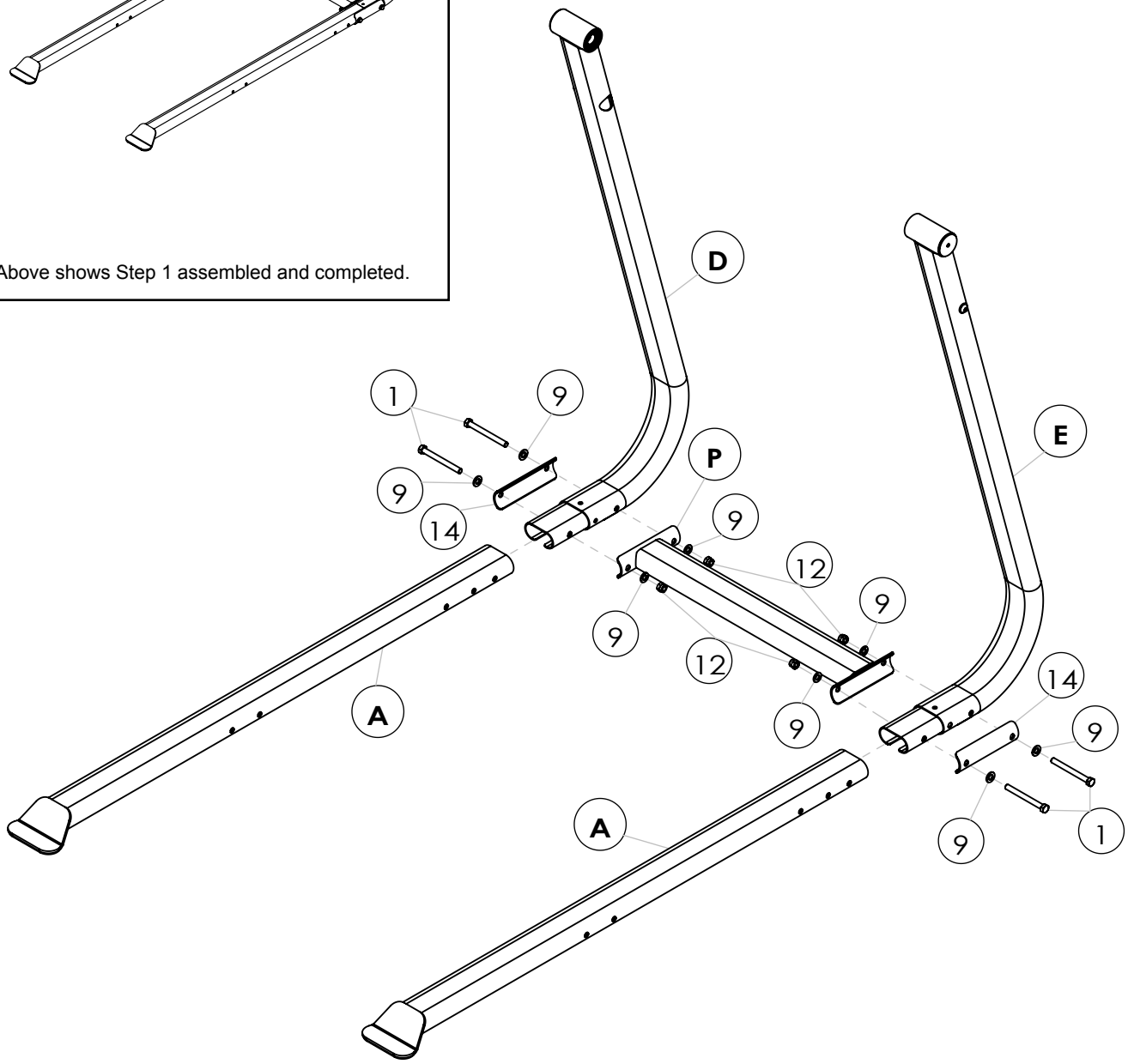

STEP 2

Be careful to assemble all components in the sequence they are presented.

NOTE:

Finger tighten all hardware in this step. DO NOT wrench tighten unless instructed. Some components may be pre-assembled. Nylon lock nuts will not fully screw onto bolts, they must be wrench tighten to fully go on.

2A. Attach Uprights **(B & C)** to Front Base Frame **(A)** using:
4 - (#1) M12x130mm Hex Head Bolt
8 - (#9) M12 Flat Washer
4 - (#12) M12 Nylon Lock Nut

2B. Attach Center Frame **(G)** to Uprights **(B & C)** and Rear Base Frames **(D & E)** using:
4 - (#4) M12x30mm Button Head Cap Screw
4 - (#9) M12 Flat Washer

2C. Attach Squat Frame **(K)** to Rear Base Frames **(D & E)**

NOTE: Mininum of two persons is required for Step 2C installation.

STEP 2

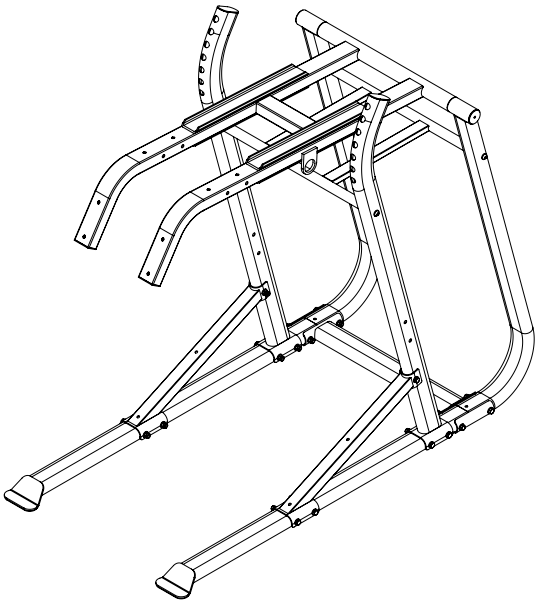

Above shows Step 2 assembled and completed.

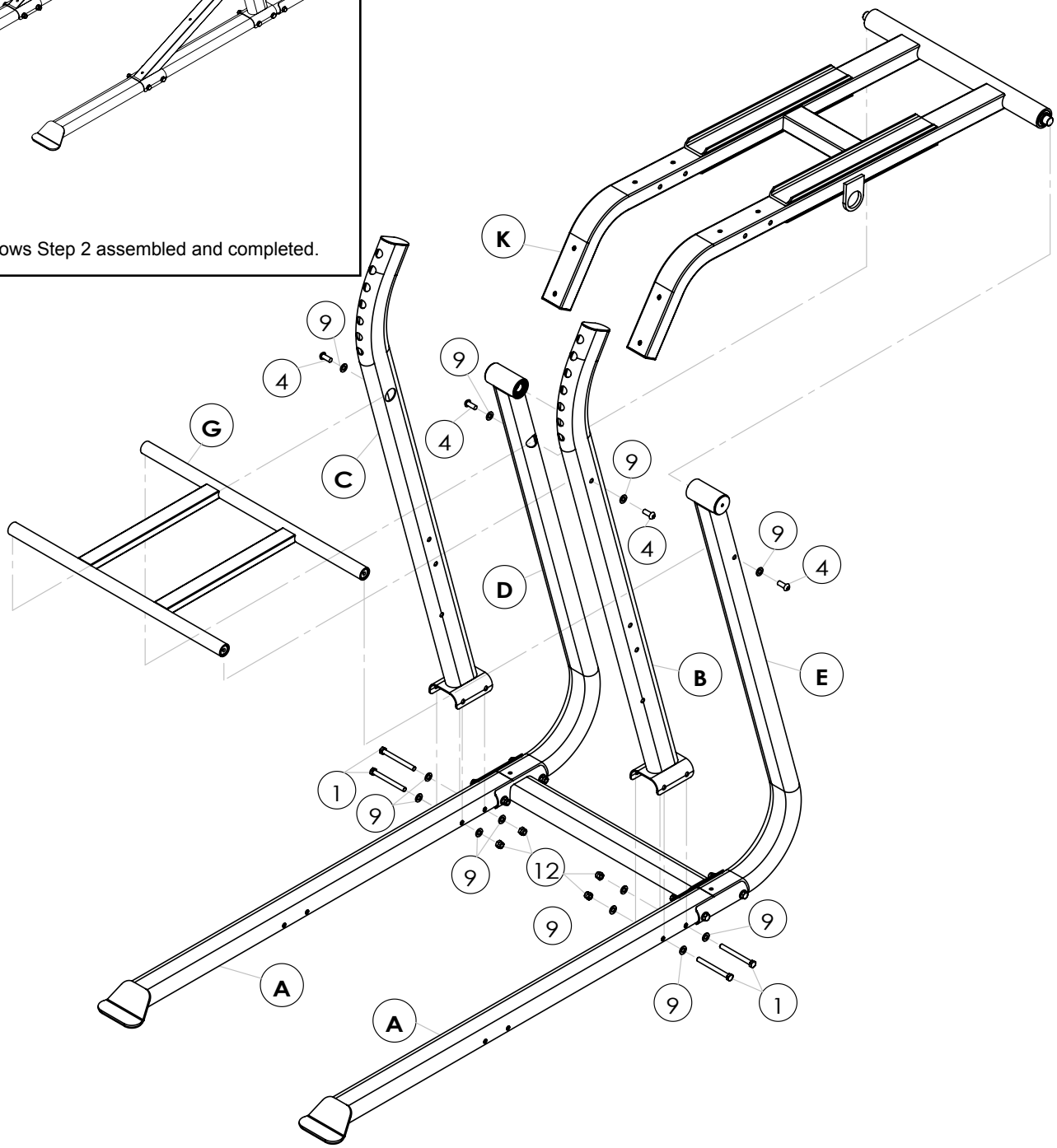

STEP 3

Be careful to assemble all components in the sequence they are presented.

NOTE:

Finger tighten all hardware first in this step. Wrench tighten ALL hardware at the end of and after STEP 3C. Some components may be pre-assembled. Nylon lock nuts will not fully screw onto bolts, they must be wrench tighten to fully go on.

3A. Attach Support Frames **(F)** to Uprights **(C & B)** and Front Base Frame **(A)** using:

4 - (#1) M12x130mm Hex Head Bolt
2 - (#3) M12 x 80mm Hex Head Bolt
12 - (#9) M12 Flat Washer
6 - (#12) M12 Nylon Lock Nut

3B. Attach Squat Plate **(J)** to Support Frames **(F)** using:

4 - (#8) M10x16mm Flat Head Cap Screw

3C. Attach Base Plate **(H)** to Front Base Frame **(A)** using:

4 - (#8) M10x16mm Flat Head Cap Screw

NOTE:

1) ***When installing Base Plate (H), please carefully tip the machine to one side in order to gain access to the screw holes.***
2) ***Mininum of two persons is required for Step 3C installation.***

STEP 3

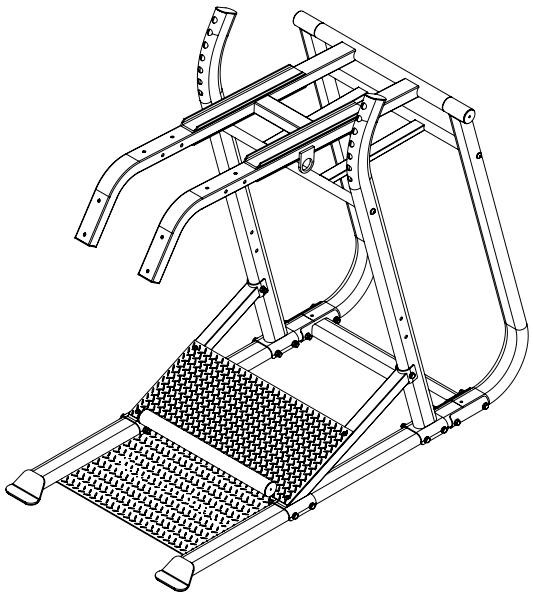

Above shows Step 3 assembled and completed.

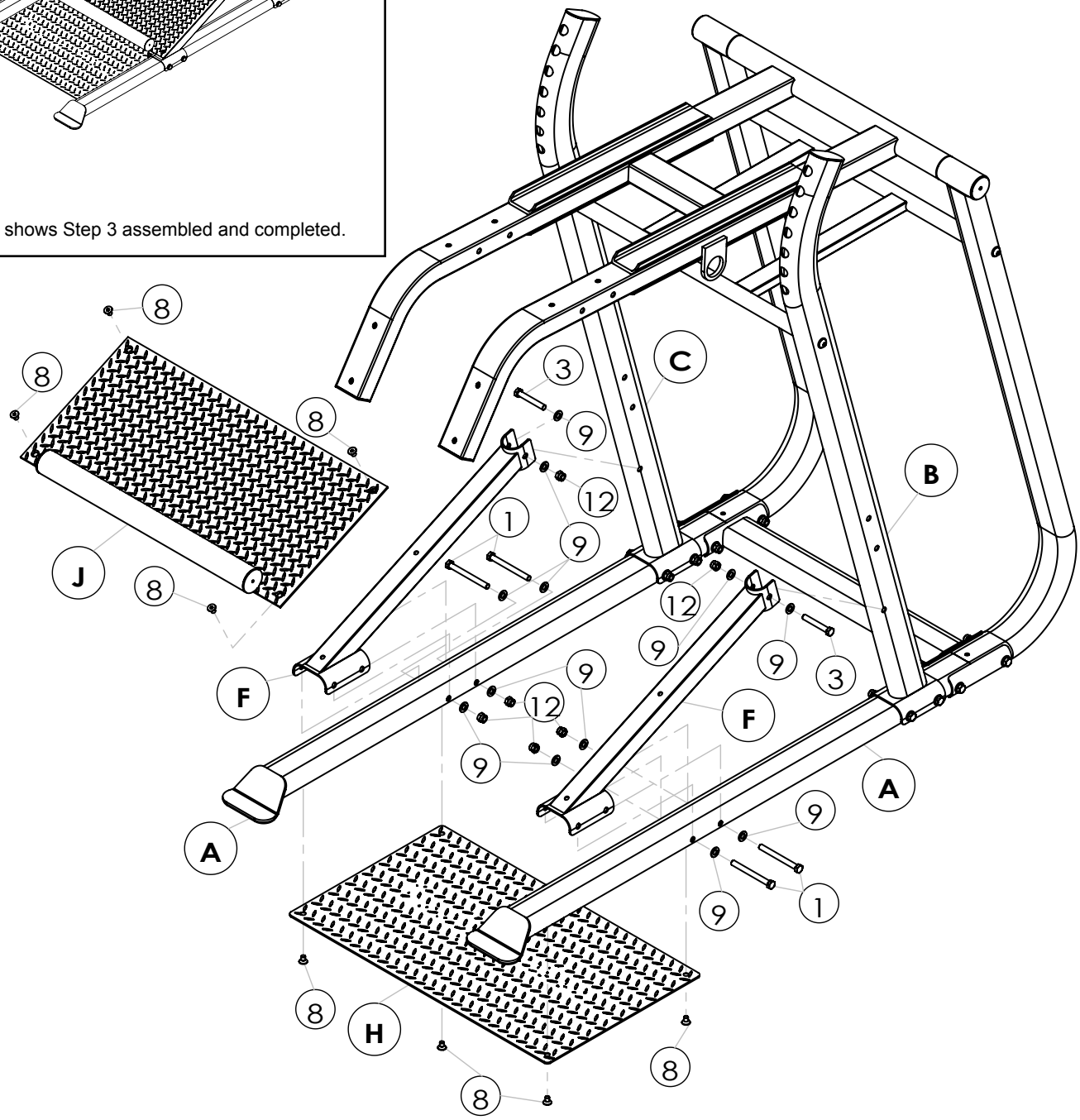

STEP 4

Be careful to assemble all components in the sequence they are presented.

NOTE:

Finger tighten all hardware in this step. DO NOT wrench tighten unless instructed. Some components may be pre-assembled. Nylon lock nuts will not fully screw onto bolts, they must be wrench tighten to fully go on.

4A. Attach Weight Horns **(M & N)** to Squat Frame **(K)** using:

4 - (#2) M12x105mm Hex Head Bolt
8 - (#9) M12 Flat Washer
4 - (#12) M12 Nylon Lock Nut

4B. Attach Weight Horns **(Q)** to Uprights **(B & C)** using:

4 - (#3) M12x80mm Hex Head Bolt
8 - (#9) M12 Flat Washer
4 - (#12) M12 Nylon Lock Nut

WARNING:

The Weight Horn (Q) has an degrees angle. Please ensure the Weight Horn points upward, otherwise the weight plates may fall off.

STEP 4

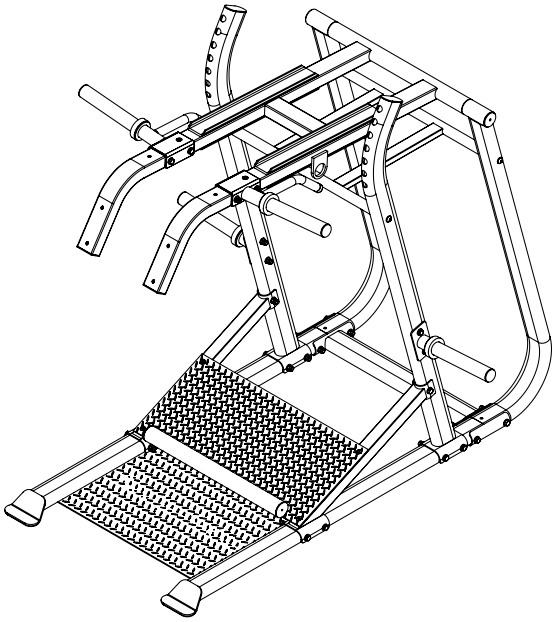

Above shows Step 4 assembled and completed.

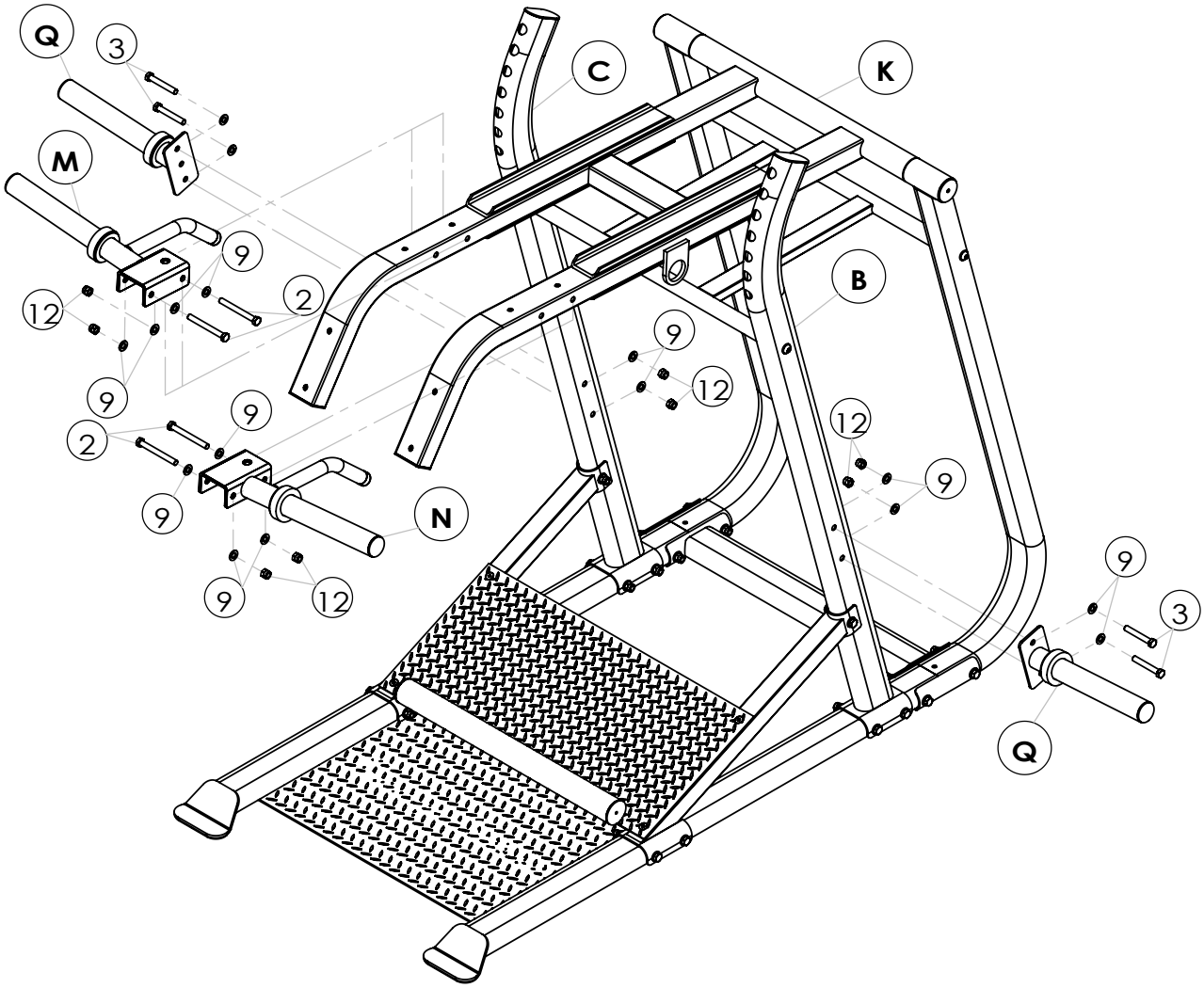

STEP 5

Be careful to assemble all components in the sequence they are presented.

NOTE:

Finger tighten all hardware first in this step. Wrench tighten ALL hardware at the end of and after STEP 5C. Some components may be pre-assembled. Nylon lock nuts will not fully screw onto bolts, they must be wrench tighten to fully go on.

5A. Attach Shoulder Pads **(#17)** to Squat Frame **(K)** using:

8 - (#6) M8x70mm Button Head Cap Screw
8 - (#10) M8 Flat Washer
8 - (#11) M8 Lock Washer

5B. Attach Adjustment Bar **(L)** to Squat Frame **(K)** Using:

2 - (#21) Bushing
2 - (#22) Ring
2 - (#7) M6x20mm Button Head Cap Screw

5C. Attach Hooks **(#23)** to Adjustment Bar **(L)** using:

2 - (#5) M8x55mm Hex Head Bolt
4 - (#10) M8 Flat Washer
4 - (#13) M8 Nylon Lock Nut

STEP 5

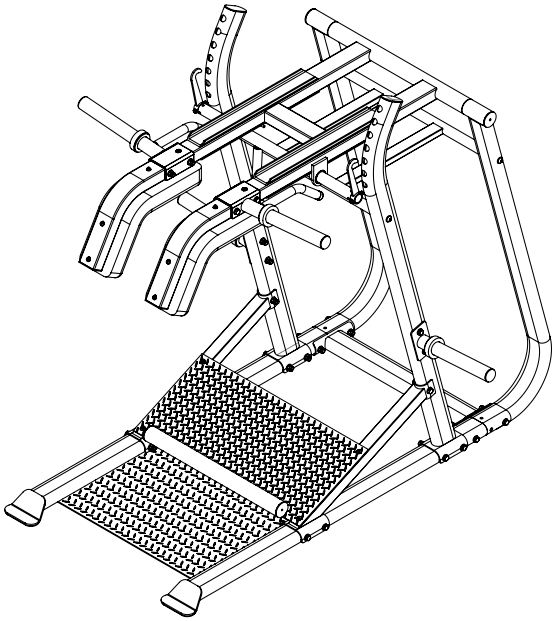

Above shows Step 4 assembled and completed.

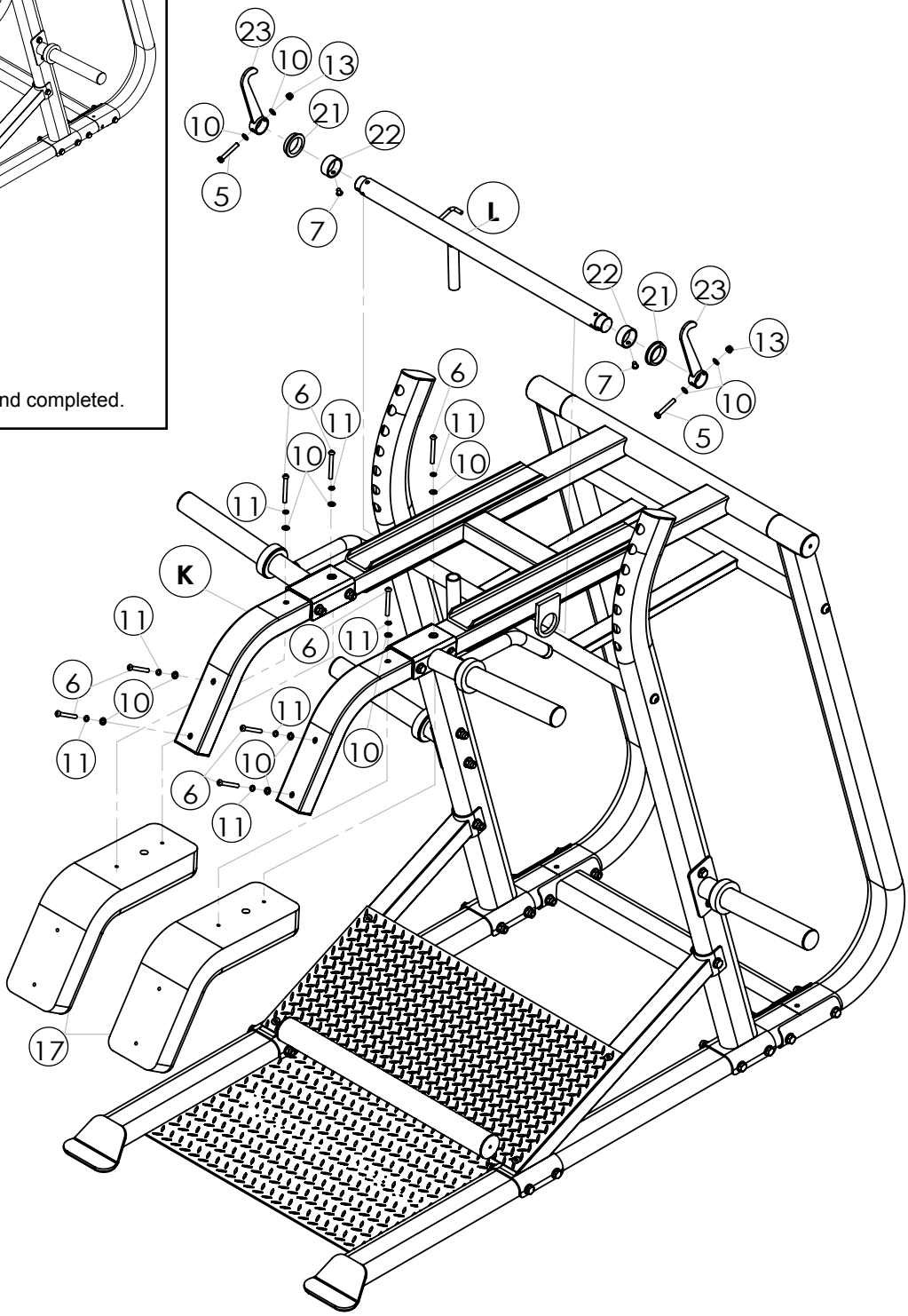

SLS500B Exploded View

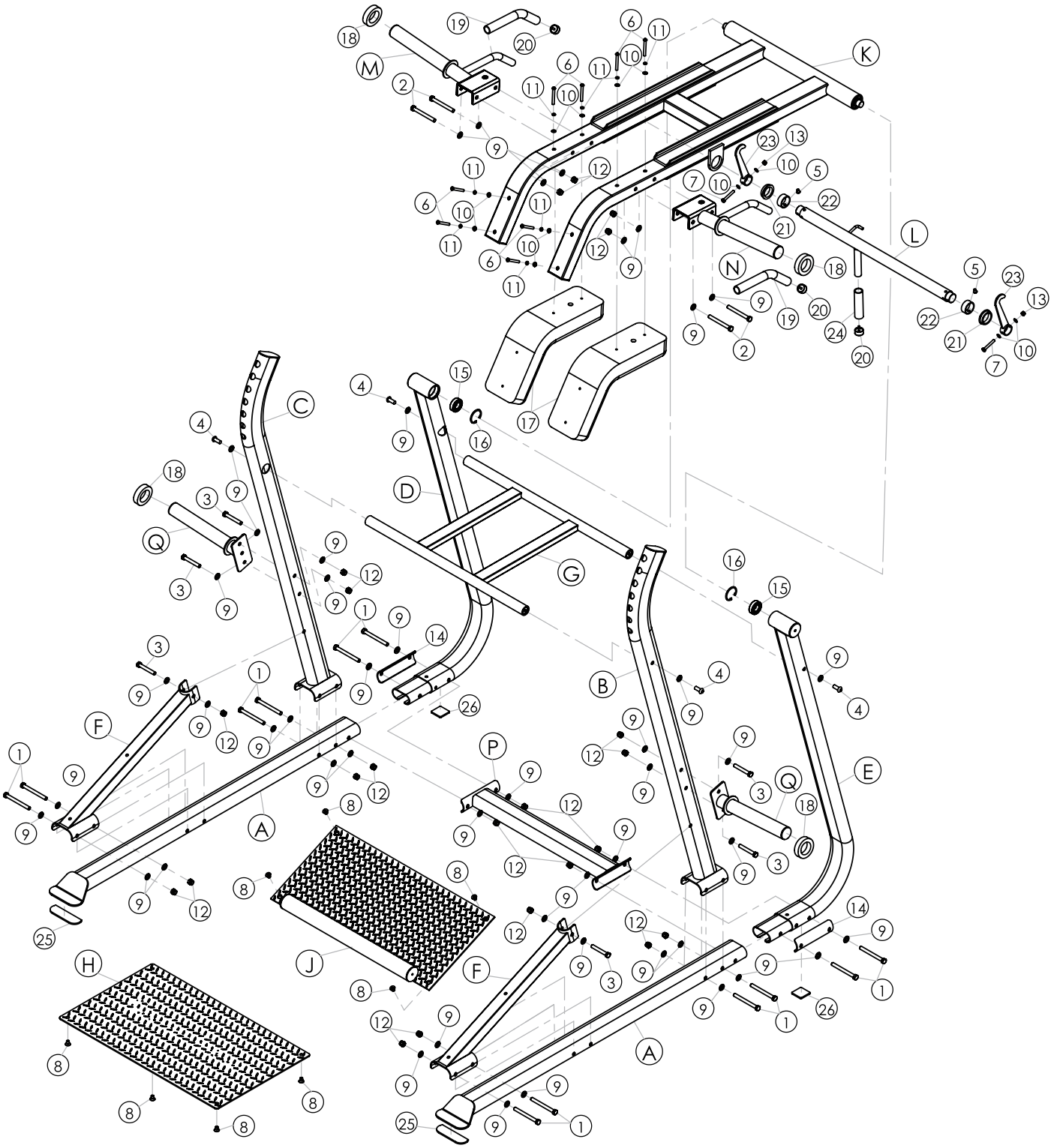

Notes

Body-Solid®
Built for Life

SLS500B

PLEASE WRITE YOUR SERIAL NUMBER IN THE BOXES BELOW

S/N # 008281-□□-□□-□□□□-□□□□

1900 S. Des Plaines Ave.
Forest Park, IL 60130
Phone:(708)427-3555
Fax:(708)427-3556
Hours: M-F 8:30 - 5:00 CST

www.bodysolid.com

Copyright 2009. Body-Solid. All rights reserved. Body-Solid reserves the right to change design and specifications when we feel it will improve the product.
Body-Solid machines maintain several patented and patent pending features and designs. All rights reserved on all design patents and utility patents.