POWERLINE®

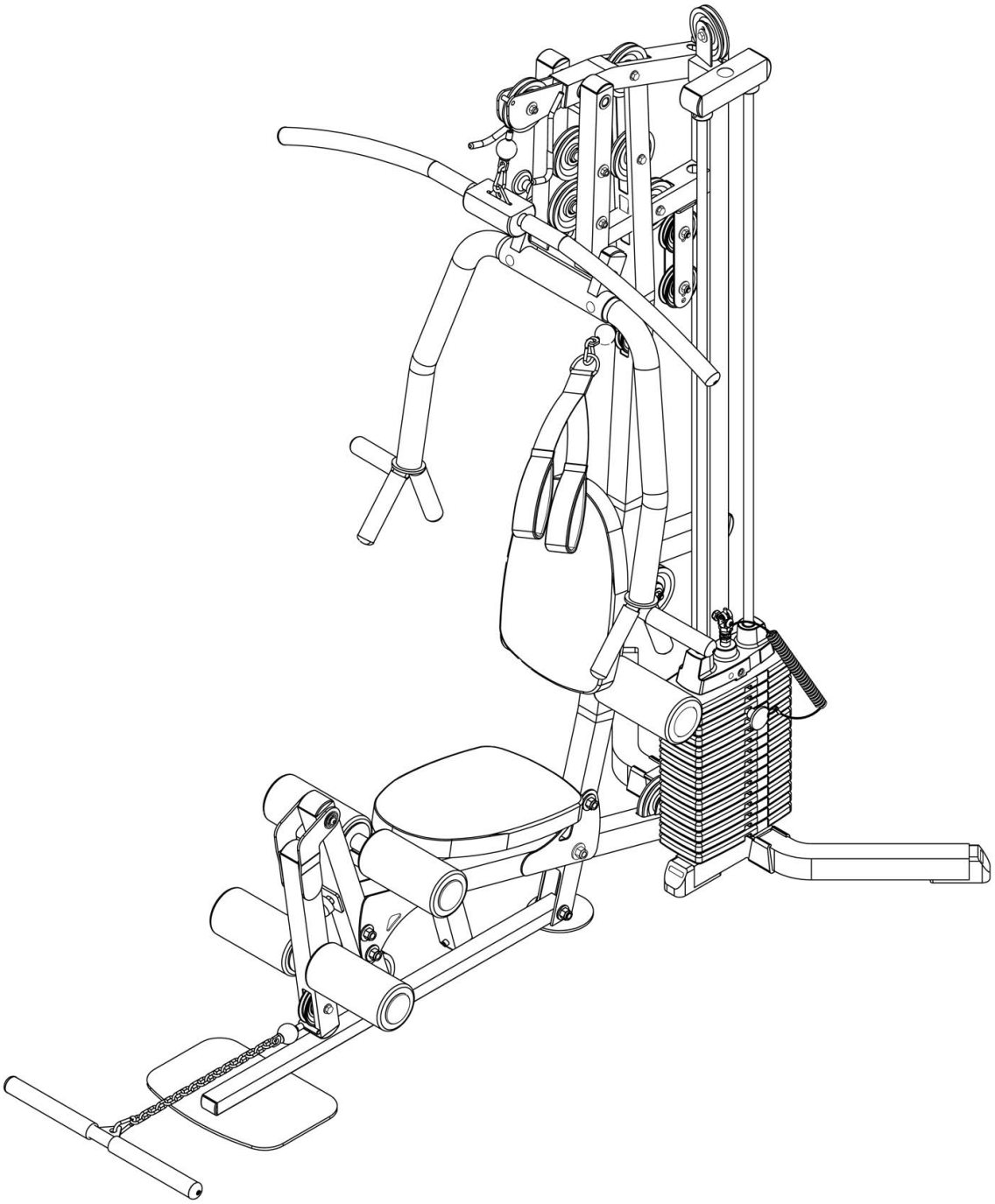

BSG10X

OWNER'S MANUAL

v. 021213

BEFORE YOU BEGIN

Thank you for purchasing the Powerline BSG10X. This gym is part of the Powerline line of quality strength training machines, which let you target specific muscle groups to achieve better muscle tone and overall body conditioning.
To maximize your use of the equipment please study this Owner's Manual thoroughly.

Unpacking the Equipment

The BSG10X is carefully tested and inspected before shipment. We have shipped the unit in several pieces that require assembly. Ask for assistance during the assembly process.
Carefully unpack the boxes and lay the pieces on the floor near the area where you plan to use the equipment.

Be careful to assemble all components in the sequence presented in this guide.

If any items are missing, contact the dealer from whom you purchased the unit or call 1-800-556-3113 (M-F 8:30-5:00 CST) for the dealer nearest you.

Body-Solid continually seeks ways to improve the performance, specifications and product manuals in order to ensure that only superior products are released from our factories. Please take the time to carefully read through this manual thoroughly. Instructions contained in this document are not intended to cover all details or variations possible with Body-Solid equipment, or to cover every contingency that may be met in conjunction with installation, operation, maintenance or troubleshooting of the equipment. Even though we have prepared this manual with extreme care, neither the publisher nor the author can accept responsability for any errors in, or omission from, the information given. Should additional information be required, or should situations arise that are not covered by this manual, the matter should be directed to your local Body-Solid representative, or the Service Department at Body-Solid Inc. in Forest Park, Illinois.

Any Questions?
Call (800) 556-3113

IMPORTANT SAFETY INSTRUCTIONS

Before beginning any fitness program, you should obtain a complete physical examination from your physician.

Il est conseille de subir un examen medical complet avant d'entreprendre tout programme d'exercise. Si vous avez des etourdissements ou des faiblesses, arretez les exercices immediatement.

Antes de comenzar cualquier programma de ejercicios, deberias tener un examen fisico con su doctor.

When using exercise equipment, you should always take basic precautions, including the following:

- Read all instructions before using the BSG10X. These instructions are written to ensure your safety and to protect the unit.
- Do not allow children on or near the equipment.
- Use the equipment only for its intended purpose as described in this guide. Do not use accessory attachments that are not recommended by the manufacturer. Such attachments might cause injuries.
- Wear proper exercise clothing and shoes for your workout, no loose clothing.
- Use care when getting on or off the unit.
- Do not overexert yourself or work to exhaustion.
- If you feel any pain or abnormal symptoms, stop your workout immediately and consult your physician.
- Never operate unit when it has been dropped or damaged. Return the equipment to a service center for examination and repair.
- Never drop or insert objects into any opening in the equipment.
- Always check the unit and its cables before each use. Make sure that all fasteners and cables are secure and in good working condition.
- Do not use the equipment outdoors or near water.

Personal Safety During Assembly

- It is strongly recommended that a qualified dealer assemble the equipment. Assistance is required.

- Before beginning assembly, please take the time to read the instructions thoroughly.

- Read each step in the assembly instructions and follow the steps in sequence. Do not skip ahead. If you skip ahead, you may learn later that you have to disassemble components and that you may have damaged the equipment.
- Assemble and operate the BSG10X on a solid, level surface. Locate the unit a few feet from the walls or furniture to provide easy access.

The BSG10X is designed for your enjoyment. By following these precautions and using common sense, you will have many safe and pleasurable hours of healthful exercise with your Powerline BSG10X.

After assembly, you should check all functions to ensure correct operation. If you experience problems, first recheck the assembly instructions to locate any possible errors made during assembly. If you are unable to correct the problem, call the dealer from whom you purchased the machine or call 1-800-556-3113 (M-F 8:30-5:00 CST) for the dealer nearest you.

Obtaining Service

Please use this Owner's Manual to make sure that all parts have been included in your shipment. When ordering parts, you must use the part number and description from this Owner's Manual. Use only Powerline replacement parts when servicing this machine. Failure to do so will void your warranty and could result in personal injury.

For information about product operation or service, go to Powerline Equipment www.bodysolid.com or contact an authorized Powerline Equipment dealer or a Powerline Equipment factory-authorized service company or contact Powerline Equipment customer service at one of the following:

Toll Free: 1-800-556-3113
Phone: 1-708-427-3555
Fax: 1-708-427-3556
Hours: M-F 8:30-5:00 CST
E-Mail: service@bodysolid.com

Or write to: Powerline
Service Department
1900 S. Des Plaines Ave.
Forest Park, IL 60130 USA

Retain this Owner's Manual for future reference. Part numbers are required when ordering parts.

SAFETY GUIDELINES

Successful resistance training programs have one prominent feature in common...safety. Resistance training has some inherent dangers, as do all physical activities. The chance of injury can be greatly reduced or completely removed by using correct lifting techniques, proper breathing, maintaining equipment in good working condition, and by wearing the appropriate clothing.

1. **It is highly recommended that you consult your physician before beginning any exercise program. This is especially important for individuals over the age of 35, or persons with pre-existing health problems.**

2. **Always warm up before starting a workout. Try to do a total body warm up before you start. It is especially important to warm up the specific muscle groups you are going to be using. This can be as simple as performing a warm up set of high repetitions and light weight for each exercise.**

3. **Use proper form. Focus on only working the muscle groups intended for the exercise you are doing. If there is strain elsewhere, you may need to re-evaluate the amount of weight that is involved with the lift. Keeping proper form also includes maintaining control through an entire range of motion.**

4. **Breath properly. Inhale during the eccentric phase of the exercise, and exhale during the lifting, or concentric phase. Never hold your breath during any part of an exercise.**

5. **Always wear the appropriate clothing and shoes when exercising. Wearing comfortable athletic shoes with good support and loose fitting, breathable clothing will reduce the risk of injury.**

6. **Maintaining equipment in proper operating condition is of utmost importance for a safe resistance training program. Pulleys and cables should be checked for wear frequently and replaced as needed. Equipment should be lubricated as indicated by the manufacturer.**

7. **Read and study all warning labels on this machine. It is absolutely necessary that you familiarize yourself and all others with the proper operation of this machine prior to use.**

8. **Keep hands, limbs, loose clothing and long hair well out of the way of all moving parts.**

9. **Do not attempt to lift more weight than you can control safely.**

10. **Inspect the machine daily for loose or worn parts. If a problem is found do not allow the machine to be used until all parts are tightened or worn or defective parts are repaired or replaced.**

ASSEMBLY INSTRUCTIONS

Assembly of the BSG10X takes professional installers about 2 hours to complete. If this is the first time you have assembled this type of equipment, plan on significantly more time.

PROFESSIONAL INSTALLERS ARE HIGHLY RECOMMENDED!

However, if you acquire the appropriate tools, obtain assistance, and follow the assembly steps sequentially, the process will take time, but is fairly easy.

Assembly Tips

Read all “Notes” on each page before beginning each step.

While you may be able to assemble the BSG10X using the illustrations only, important safety notes and other tips are included in the text.

Some pieces may have extra holes that you will not use. Use only those holes indicated in the instructions and illustrations.

NOTE: To find out the length of a particular bolt, measure its shank (the long, narrow part beneath the head). Refer to the following diagram:

Do not fully tighten bolts until instructed to do so.

Note: After assembly, you should check all functions to ensure correct operation. If you experience problems, first recheck the assembly instructions to locate any possible errors made during assembly.
If you are unable to correct the problem, call the dealer from whom you purchased the machine or call 1-800-556-3113 for the dealer nearest you.

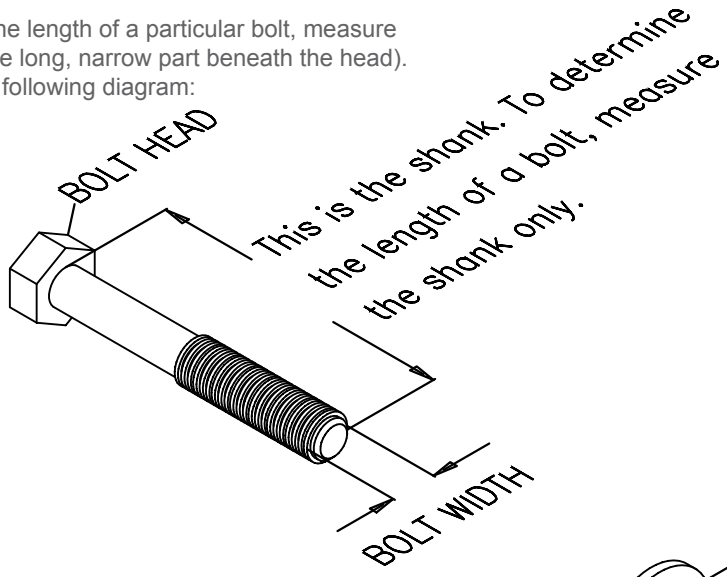

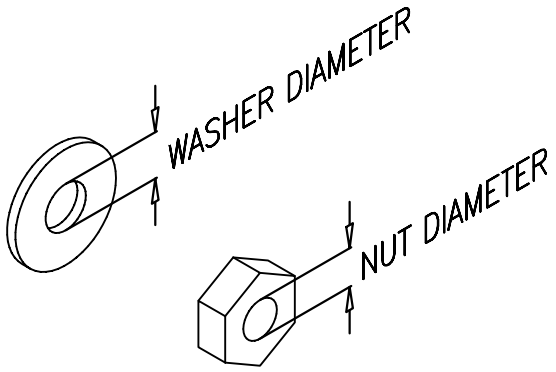

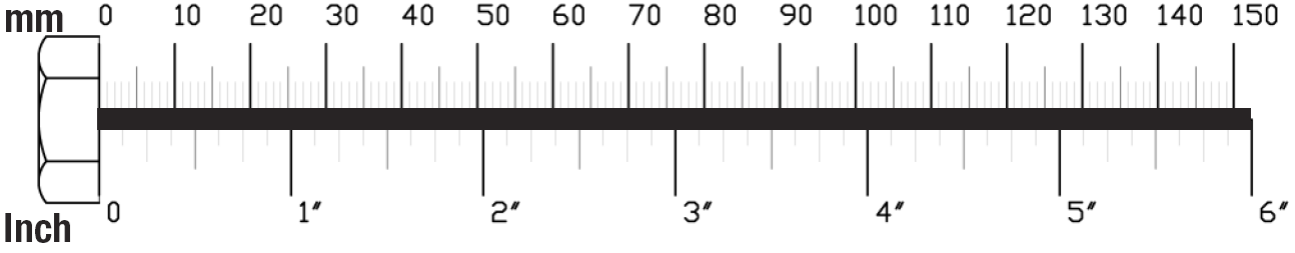

STEP 1

Be careful to assemble all components in the sequence they are presented.

NOTE:
Finger tighten all hardware in this step.

• Be careful to not remove the shipping straps holding the lower frame against the main upright.

A. Stand the gym upright being careful to prevent the gym from falling over until Rear Leg (B) is attached.

B. Attach Rear Leg (B) to Main Frame (A) as shown using:
Two 75 (3/8" x 3" hex head bolt)*
One 74 (3/8" x 2 3/4" hex head bolt)*
Six 56 (3/8" washer)
Three 63 (3/8" nylon lock nut)

*Note:
The two longer bolts (75) go into the bottom positions and the shorter bolt (74) on the top position. Use washers (56) on both the bolt and nut (63) side.

C. Move gym to area of use making sure the main upright is vertical and then fully tighten the lower leg bolts.

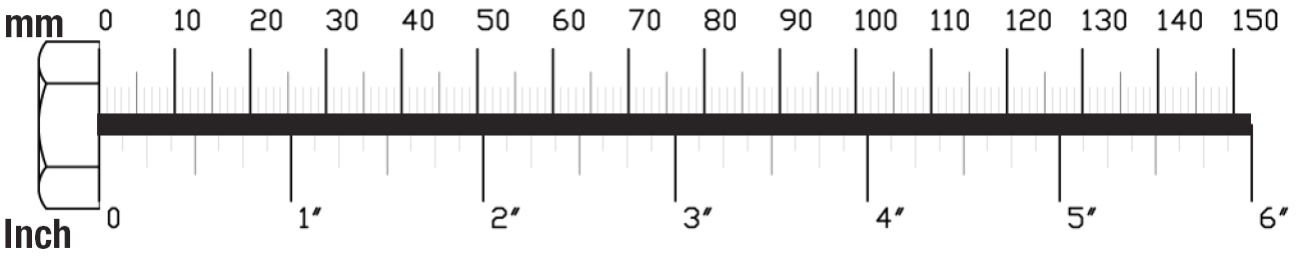

1

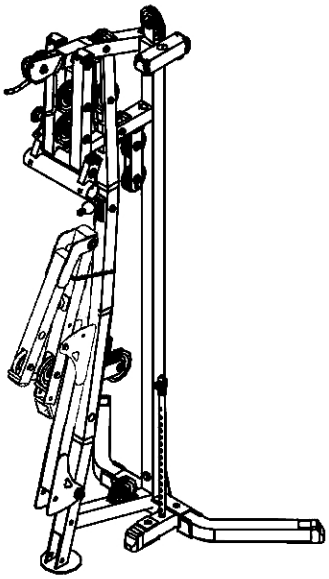

Above shows STEP 1 assembled and completed.

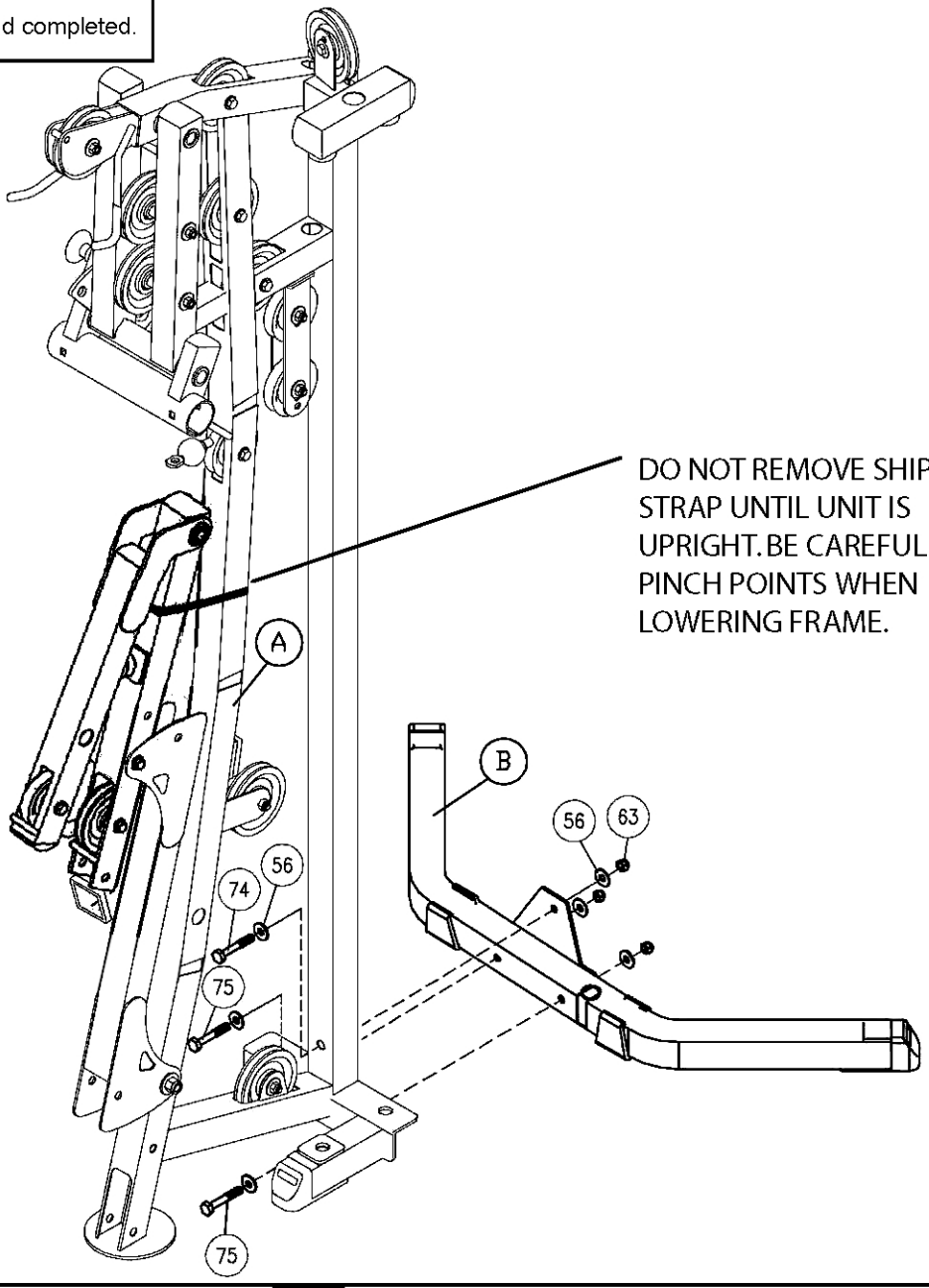

STEP

2

Be careful to assemble all components in the sequence they are presented.

NOTE:
Finger tighten all hardware in this step.

A. Secure the lower frame to Main Frame (A) by using:
Two 75 (3/8” x 3” hex head bolt)*
Four 56 (3/8” washer)
Two 63 (3/8” nylon lock nut)

B. Install lower Flat Plate (E) into Main Frame (A) using:
Two 70 (3/8” x 2 1/2” hex head bolt)*
Four 56 (3/8” washer)
Two 63 (3/8” nylon lock nut)

C. When all parts are aligned and bolts are installed, fully tighten all fasteners.

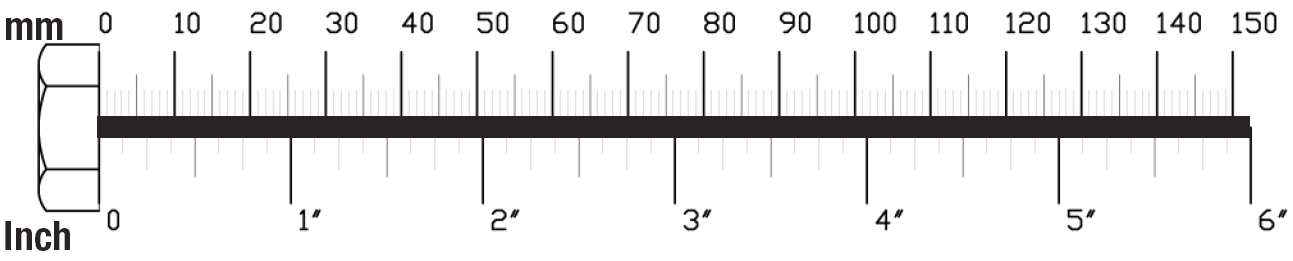

STEP 2

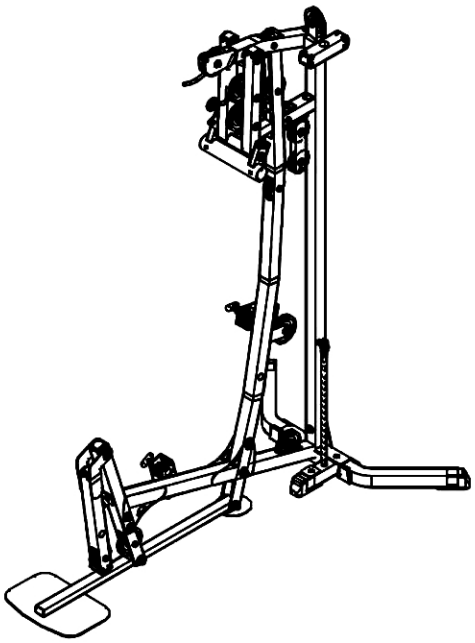

Above shows STEP 2 assembled and completed.

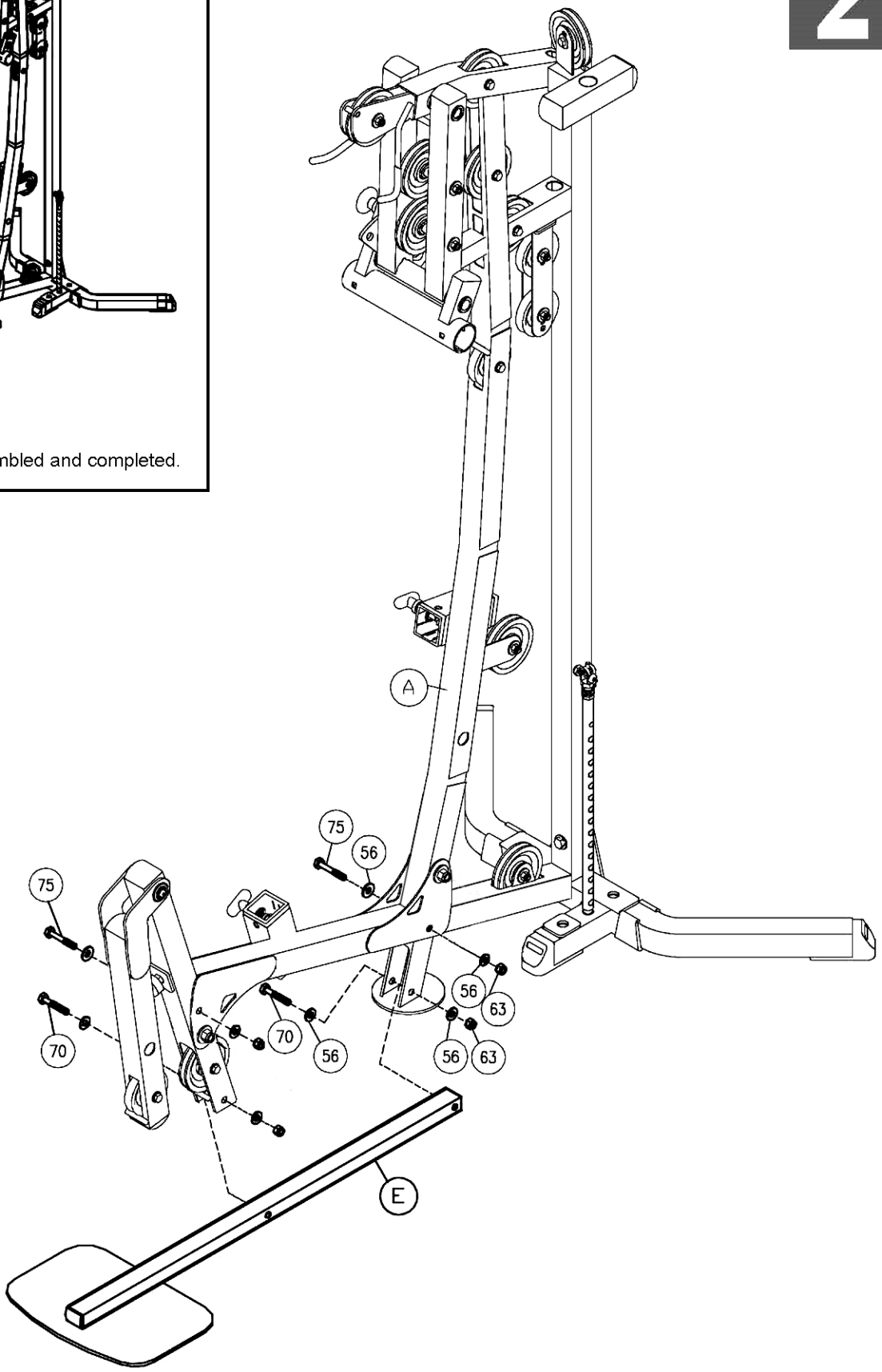

STEP

3

Be careful to assemble all components in the sequence they are presented.

A. Install Press Arms (J) and (K) into Press Arm Frame and secure using:
Two 73 (3/8" x 2 1/2" carriage bolt)
Two 56 (3/8" washer)
Two 63 (3/8" nylon lock nut)

B. Fully tighten fasteners. Make sure there is no extra movement between the Press Arms (J) and (K) and the Press Arm Frame.

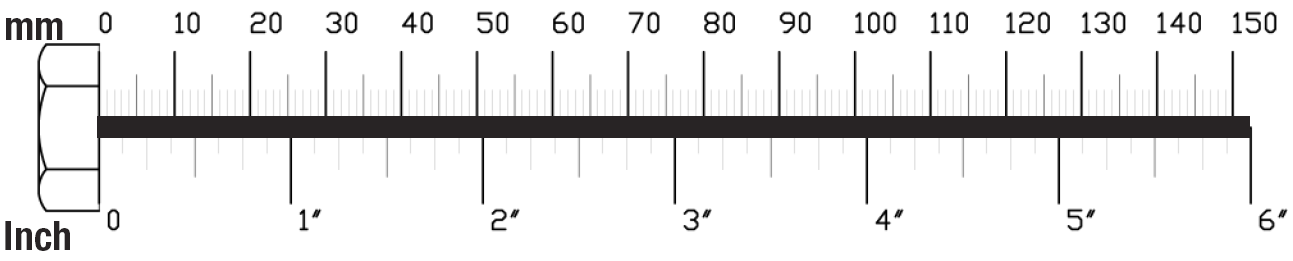

STEP 3

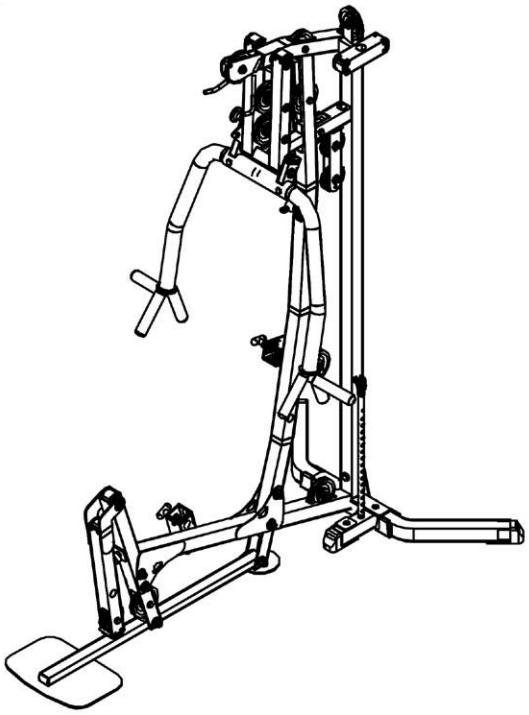

Above shows STEP 3 assembled and completed.

SMALL HANDLE
TO THE FRONT

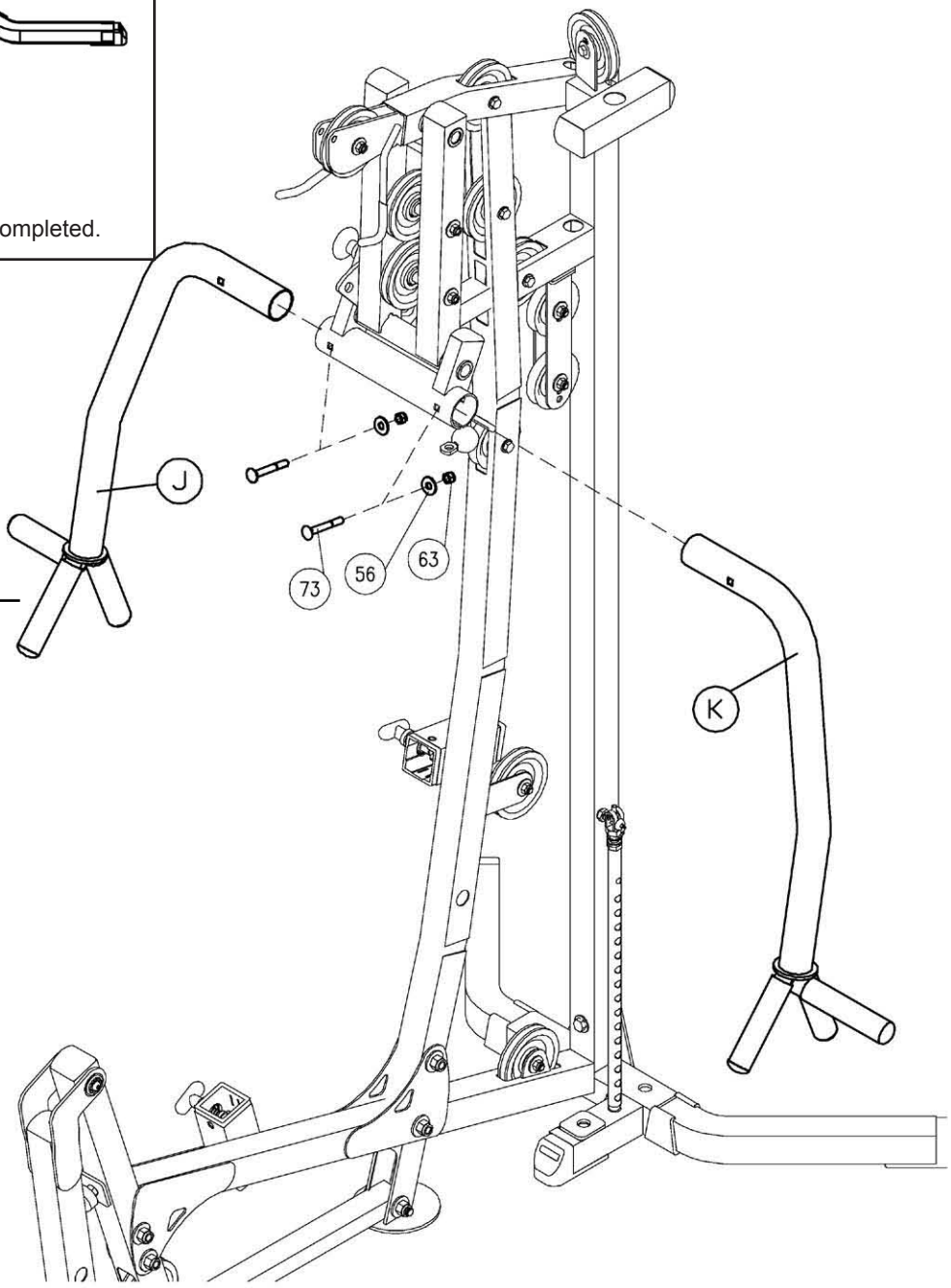

STEP

4

Be careful to assemble all components in the sequence they are presented.

A. Install chrome Guide Rods (F) into lower Main Frame (A) and Rear Leg (B) as shown in the diagram.

B. Slide two Rubber Donuts (28) onto each chrome Guide Rod (F).

C. Tilt Guide Rods (F) away from Main Frame (A) and install weight plates (46).
Be careful to hold Guide Rods (F) steady when installing weight plates.

D. Install pre-cabled chrome Selector Rod (2) into the Top Plate (45) and secure with:
One 66 (5/16" x 3/8" allen screw)
One 60 (3/8" spring lock washer)
Fully tighten bolt.
Adjust cable length by screwing threaded cable attachment bolt as needed.

E. Install Top Plate (45) and Selector Rod (2) assembly onto the Guide Rods (F).

F. Install Shaft Collars (44) onto Guide Rods (F) and align Guide Rods (F) so they are directly below the guide rod holes in the upper section of Main Frame (A).

G. Slide Shaft Collars (44) upward, aligning the key extension on the Shaft Collars (44) with the slot extensions in the upper frame holes.

H. Turn Shaft Collars (44) so they lock the Guide Rods (F) into position and fully tighten Allen Screws (67).

I. Install weight selector pin (29) into weight stack. Attach ring to cable.
If pin is loose in the weight stack, slightly shorten cable length.

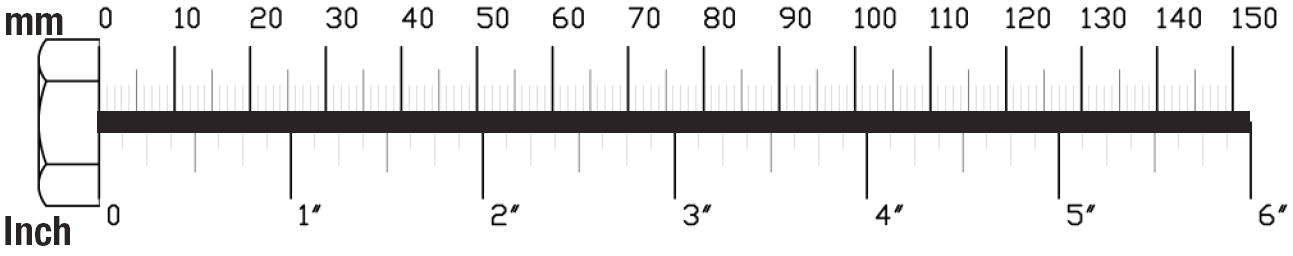

STEP 4

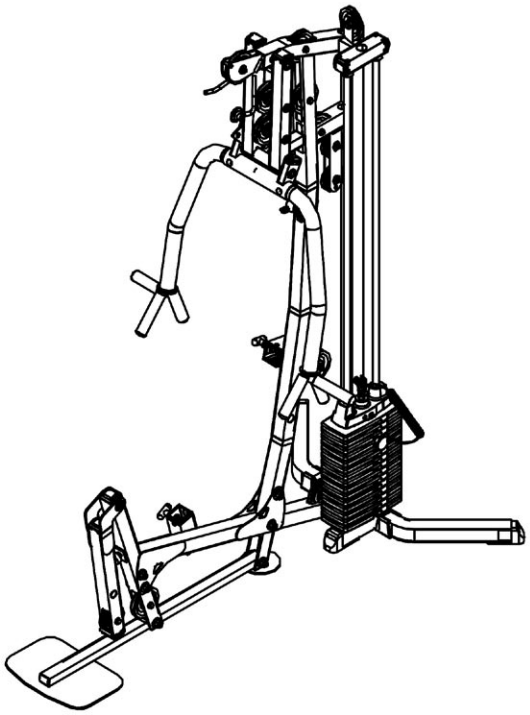

Above shows STEP 4 assembled and completed.

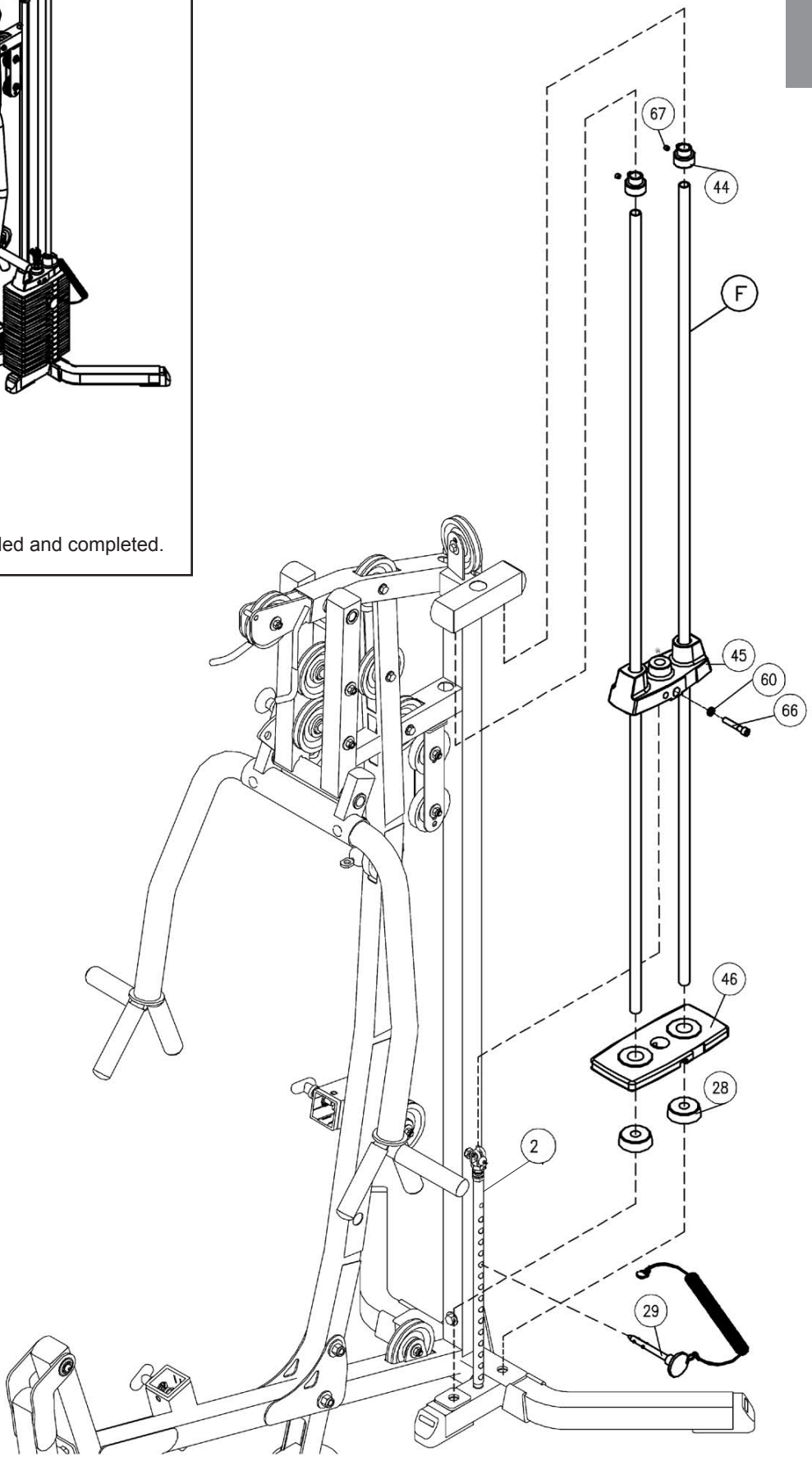

STEP

5

Be careful to assemble all components in the sequence they are presented.

A. Install pre-assembled Seat Assembly (Q) and Back Rest Assembly (Q) into adjustment sockets. Install Safety Catch Bolts (65) and Spring Lock Washers (57) into ends of brackets.

B. Turn the two locking T-Shaped Pop Pins (10) to secure the seat or back rest after positioned.

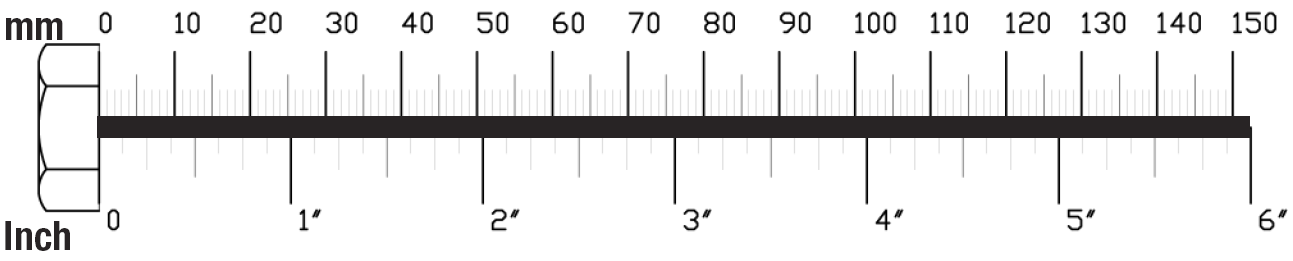

STEP 5

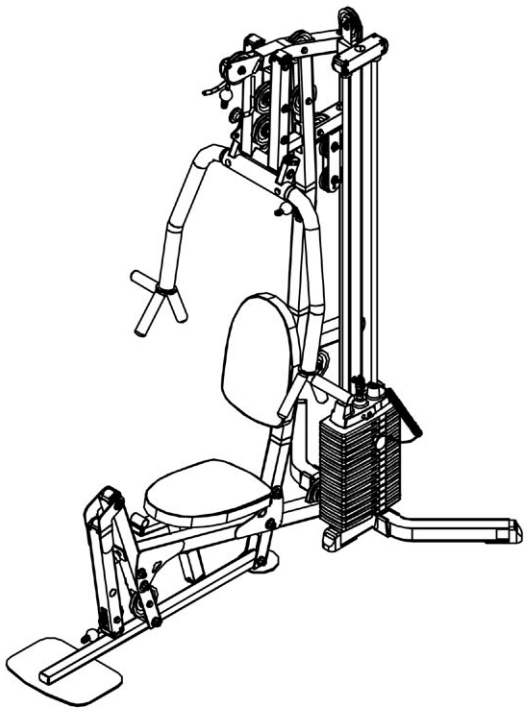

Above shows STEP 5 assembled and completed.

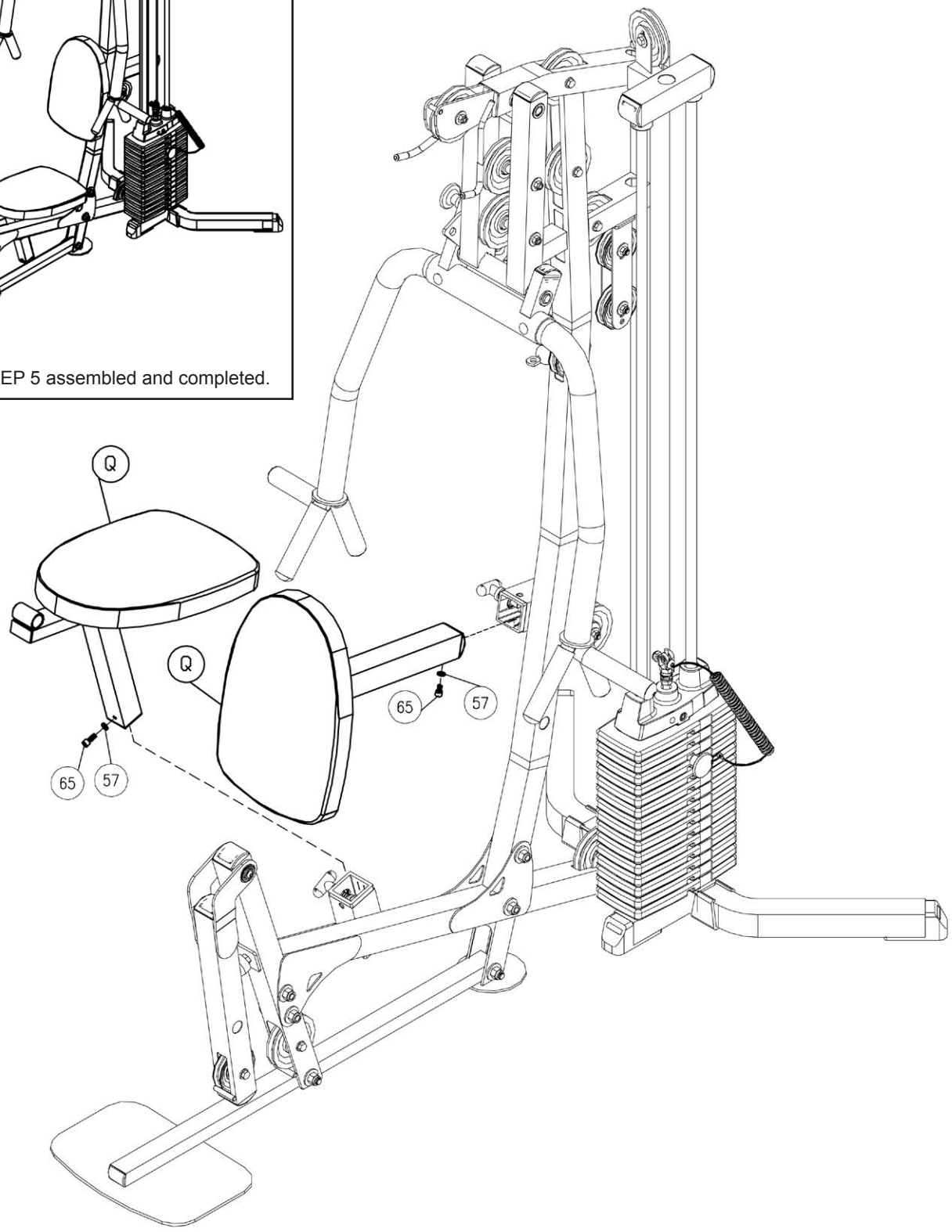

STEP

6

Be careful to assemble all components in the sequence they are presented.

A. Install one Foam Roller (25) onto Foam Roller Bar (1) using a Plastic Washer (26) and Plastic End Cap (27) as shown.
Do this three times: onto one side of each of the three Foam Roller Bars (1).

B. Slide (partially assembled) Foam Rollers Bar (1) into holes in Main Frame (A) under Back Pad (Q), in front of Seat Pad (Q) and into the lower hole in the leg extension.

C. Install all remaining Plastic Washers (26), Foam Rollers (25) and Plastic End Caps (27) as shown.

D. Install accessory handles to cable ends using Snap Links (18). Install the Lat Bar (6) at the high cable position, Ab Crunch Harness (13) at the mid row cable position and the Low Row Bar (9) with Chain Extension (17) at the low cable position.

Chain Extension (17) may be used at any position to provide extra cable length.

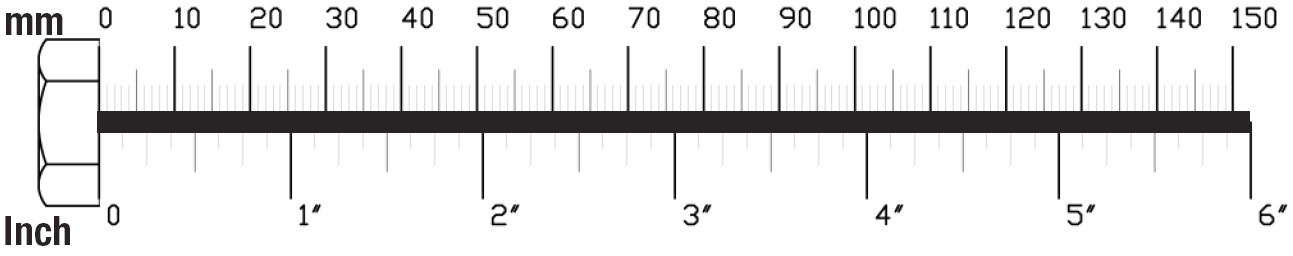

STEP
6

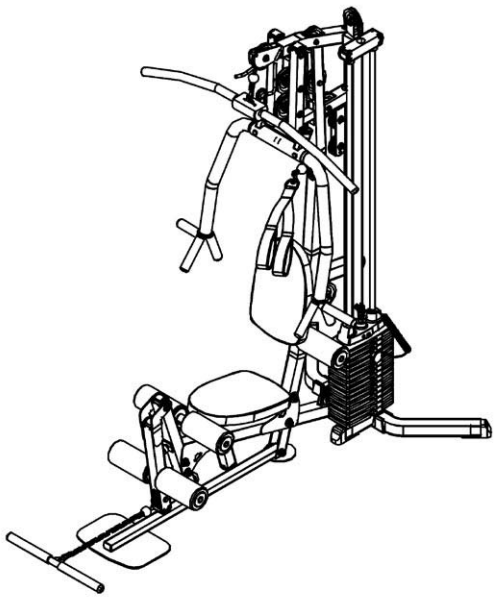

Above shows STEP 6 assembled and completed.

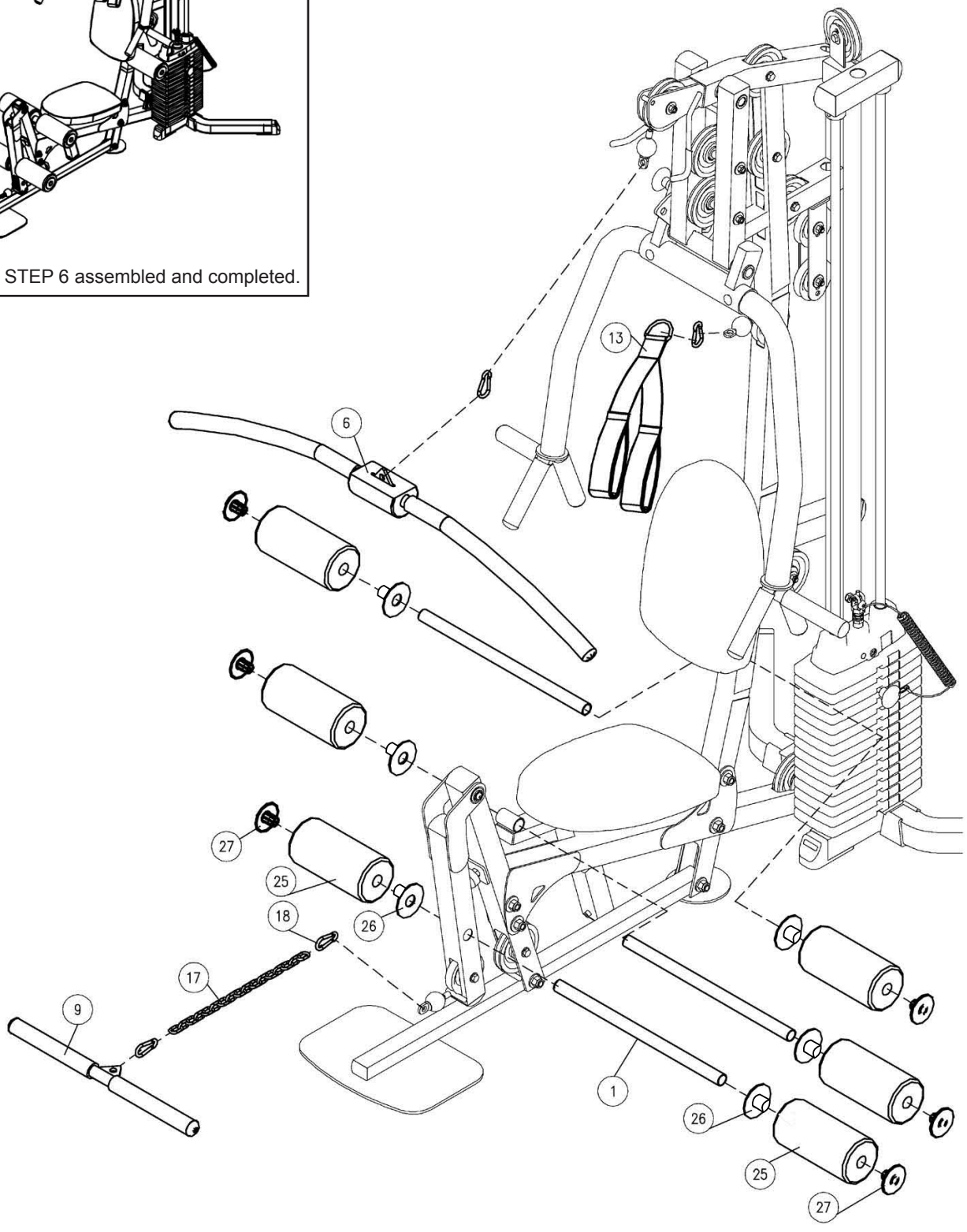

IMPORTANT SAFETY INSTRUCTIONS

Be sure that all users carefully read and understand all warning, safety and maintenance labels on the machine before each use. Failure to do so may result in serious injury. It is imperative that you retain this Owner's Manual and be sure all warning labels are legible and intact. Replacement Owner's Manuals and labels are available from your local dealer.
If you have any questions about the operation, set up or maintenance of this machine please call our customer service department at 1-800-556-3113 (M-F 8:30-5:00).

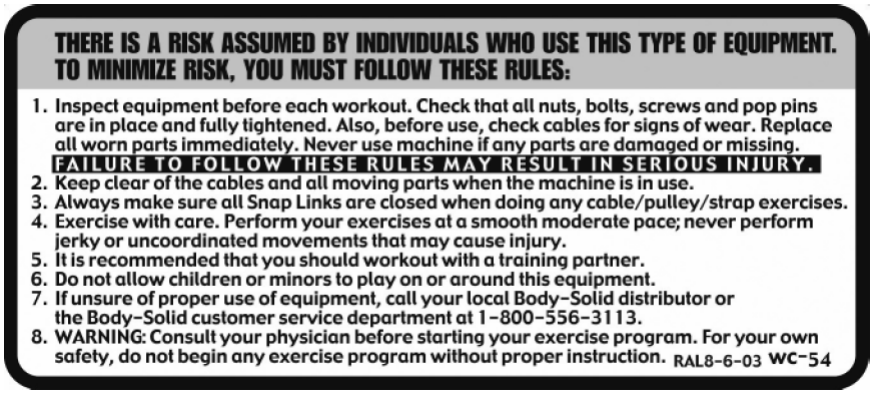

#DWRULE-4
Warning Label for Rules



#DWSM-5
Warning Label for Maintenance

POWERLINE®

Warning

Safety and Maintenance of Cables

Although Powerline Equipment provides the highest quality of materials and workmanship in its products, the fact remains that component parts eventually wear out over time and with use. **This is particularly true with reference to pliable moving parts such as cables.** In spite of any expressed and/or implied warranties, intervening factors such as improper use, unusually heavy use, improper installation, improper alignment, poor maintenance, etc. serve to drastically reduce the usable life and safety of cables.

Be advised that dangerous conditions can arise even during warranty periods and that any expressed and/or implied warranties **Do Not Negate** the owner's responsibility to thoroughly, carefully and daily inspect all cables on this machine.

Serious injury can occur if you are struck by falling weights or moving parts. The risk that you assume by using this type of equipment can be reduced by following a few simple steps:

Cable inspection should be performed daily. Inspect all cables, the nylon coating on all cables and the area near the fittings at each end of each cable. **Replace any damaged or worn cables immediately.** Do not allow the machine to be used until damaged or worn cables are replaced.

Important: Cables are wear items. It is your responsibility to prevent unexpected breakage. The actual wire strands, the fittings and the nylon coating itself must all be scrutinized. Using or allowing a machine to be used with a suspect cable can result in serious injury. The nylon coating on a cable is essential for cable life and safety. Visually inspect all cables and pulleys. Look at the cables as they travel around the cams and pulleys. A cable that is wearing may exhibit a "ballooned" or broken coating in the area that passes over the pulley. Damage to the coating is an early warning signal. A cable should be replaced if the nylon coating is missing, is damaged in anyway, has pulled or shrunk from the fittings at the end of the cables, or if it is discolored. Discoloration of the cable coating is an early indication of internal problems such as wear or fraying.

Annual cable replacement (semiannual in multi-user settings) is strongly recommended as an additional precaution. The rate at which cables wear depends on many factors including: number of users, number of repetitions, weight setting, misuse, abuse, etc. Because of this, periodic cable replacement is not a sufficient safeguard against unexpected breakage.

Nothing short of a thorough, careful, daily inspection constitutes an adequate safety program.

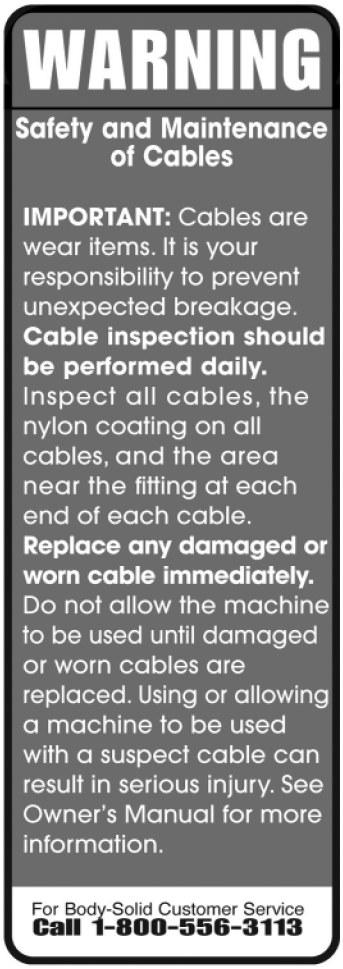

WARNINGS, SAFETY & MAINTENANCE

Precision craftsmanship assures Powerline Equipment's ability to consistently deliver products of the highest standards. Our products have been carefully designed to ensure safe, efficient long term operation.

However, it must be realized that safe use of this equipment requires that owners carefully read and follow the Powerline Equipment use recommendations, warnings, and maintenance guidelines in this Owners Manual.

Routine inspection and maintenance is of critical importance to ensure the maximum safety and performance of the BSG10X. Powerline Equipment uses the highest quality materials available, but wear is inevitable. Therefore, you must carefully inspect your equipment as outlined in the Maintenance Schedule on the next page.

Be advised that dangerous conditions can arise even during a warranty period. A warranty does not negate the owner's responsibility to thoroughly, carefully and daily inspect the machine.

Including maintaining the equipment the owner's responsibility is also to:

- Be sure to always provide adequate supervision to all end-users.
- Be sure to instruct all end-users of proper usage.
- Be sure all supervisors and personal trainers who instruct end-users on equipment are properly trained and know the function and importance of every adjustment and setting. Also, be sure these trainers provide proper instruction to end-users on the fundamentals of strength training.

CABLES:

- While the machine is not in use. Carefully run your fingers along the cable to feel for thinning or bulging areas. Replace cables immediately at the first sign of damage or wear. Do not use equipment until damaged cable has been replaced.
- Visually inspect the cables for fraying, cracking, peeling or discoloration.
- Check slack in cables and re-adjust cable tension if needed.
- Check that jam nut at Weight Stack is tight.

UPHOLSTERY:

- Wipe down after every workout.
- Periodically take the time to use a mild soap or a mild vinyl upholstery cleaner. Avoid using any abrasive cleaner not intended for use on vinyl.
- Keep sharp or pointed objects out of your pockets and clear of all upholstery.

NUTS/BOLTS/FASTENERS:

- Periodically inspect all nuts and bolts. Tighten if needed. If bolts seem to loosen periodically, use Loctite 242 for a long-term cure.
- Go through a re-tightening sequence periodically to ensure that all hardware is properly tensioned.

GUIDE RODS:

- Wipe clean with a dust free rag. Lubricate with a Silicon or Teflon based lubricant.

ADJUSTMENTS / LOCKING PINS / TIGHTENING KNOBS:

- Check all pieces for signs of visible wear or damage.
- Check springs in Snap Links and Pop Pins for proper tension and alignment.
- If the spring sticks or has lost its rigidity, replace it immediately.

ANTI-SKID SURFACES:

- Replace if they appear worn or become slippery.

WARNING INSTRUCTION LABELS:

- Inspect and familiarize yourself with all safety warnings and other user information on decals.

POWERLINE®

MAINTENANCE SCHEDULE	DAILY	WEEKLY	LATEST DATE ENTRY						
CABLES: CHECK TENSION, END FITTINGS,AND COATING. CHECK THAT JAM NUT AT WEIGHT STACK IS TIGHT.	✔	✔							
UPHOLSTERY: WIPE DOWN AND DRY CLEAN AND CONDITION.	✔	✔							
FRAME: WIPE DOWN AND DRY POLISH/WAX	✔	✔							
CHROME: WIPE DOWN AND DRY POLISH/LUBRICATE	✔	✔							
NUTS/BOLTS/FASTENERS: TIGHTEN AND / OR ADJUST AS NEEDED		✔							
GUIDE RODS: LUBRICATE AND CLEAN		✔							
LINEAR RODS: LUBRICATE AND CLEAN		✔							
SEAT SLEEVES: LUBRICATE AND CLEAN		✔							
ADJUSTMENTS / LOCKING PINS / TIGHTENING KNOBS		✔							
WEIGHT STACK PINS		✔							
WARNING INSTRUCTION LABELS		✔							
SPRINGS / POP PINS	✔								
ANTI-SKID SURFACES		✔							
HAND GRIPS / ROLLERS		✔							

FOR POWERLINE CUSTOMER SERVICE:
1-800-556-3113

*Make several copies of this page to keep track of your maintenance.
You can print more copies of this page by going to:
http://www.bodysolid.com/support/powerline/docs.html

PHRASES, TERMS, TIPS & GUIDELINES

BEGINNER'S GUIDELINES

- Work out at least two times a week.
- Include six to eight exercises that train major muscle groups.
- Perform two or three sets of at least eight to 12 repetitions.

AEROBIC
Exercise that primarily uses oxygen to burn fuel at low to moderate levels of intensity. Running and jogging are examples of aerobic exercise.

ANAEROBIC
Exercise that primarily uses the body's stored fuel for energy. Intense weight lifting is an example of an anaerobic exercise.

ATROPHY
Decrease of a muscle caused by the decrease in the size of its cells because of inactivity.

BALLISTIC STRETCHING
A stretching technique that involves a bouncing or bobbing movement during the stretch. The final position is not held. This is not a recommended stretching technique.

BREATHING
Never hold your breath during any part of an exercise. Holding your breath may cause severe intra-thoracic pressure and raise blood pressure leading to dizziness, blackout or other complications. The rule of thumb is to exhale on exertion and inhale on the return part of the exercise.

CARDIOVASCULAR
Referring to the heart, lungs, and other periphery systems involved in the transport of oxygen throughout the body.

CHALLENGE YOUR MUSCLES
All strength training should progress gradually, using increases in weight until your goals are reached. Then, change your workout to include increased reps or a higher weight resistance. Alter the order of your exercises, perform multiple sets or different exercises to maintain results or reach new goals.

CHANGE ROUTINE
Beginner's please note: If you want to make changes in the exercise routine that you do, wait until about the six to eight week point. Advanced lifters may want to change routines to avoid plateaus in gaining size or strength.

CIRCUIT TRAINING
Exercise stations that consist of various combinations of weight training, flexibility, calisthenics, and aerobic exercise.

CONCENTRIC MUSCLE ACTION
The muscle shortens while contracting against resistance.

ECCENTRIC MUSCLE ACTION
The muscle lengthens while contracting against resistance.

EXERCISE FREQUENCY
Exercise each muscle group 2-3 times per week. Allow a minimum of 48 hours rest for each muscle group worked. If you are doing a total-body workout, three training sessions per week, performed on every second day, is adequate.

EXERCISE LARGE MUSCLES FIRST
You should work your large muscle groups first (ie. squat, bench press, lat pulldown) before you exercise your small muscle groups (ie. biceps curls, tricep pressdowns, lateral raises).

EXERCISE PROGRAM DURATION
A weight training routine should take anywhere from 45 minutes to one hour to complete. Add another 20 to 60 minutes when you include stretching, warm-up, aerobics and cool-down.

GIVE YOUR MUSCLES A REST
You'll get the most out of strength training if you give your muscles at least 48 hours rest to recover and rebuild between strength training workouts.

HYPERTROPHY
Enlargement of a muscle caused by an increase in the size of its cells in response to weight training.

INTENSITY
The degree to which the body is worked during exercise.

ISOKINETIC EXERCISE
Resistance is given at a fixed velocity of movement with accommodating intensity. A machine that moves you through an entire range of motion at a preset speed and will not change no matter how much pressure is put forth by the individual.

ISOMETRIC EXERCISE
Contracts the muscle statically without changing its length.
Example: Attempting to lift a weight heavier than you can handle, but cannot move.

ISOTONIC EXERCISE
Shortens and lengthens the muscle through a complete range of motion. This defines weight training with full range of motion.

MUSCLE FATIGUE
Fatigue is when you can't possibly do another rep without sacrificing form.

MUSCULAR ENDURANCE
The ability to perform repetitive muscular contractions against some resistance.

MUSCULAR STRENGTH
The maximum force that can be applied by a muscle during a single maximum contraction.

OSTEOPOROSIS
A decrease in bone density.

PLYOMETRIC EXERCISE
A technique that includes specific exercises which encompass a rapid stretch of a muscle eccentrically, followed immediately by a rapid concentric contraction of that muscle for the purpose of facilitating and developing a forceful explosive movement over a short period of time. Examples of these are using medicine balls for upper extremity and depth jumping for lower extremity.

PHRASES, TERMS, TIPS & GUIDELINES

STARTING RESISTANCE LEVEL

If you begin weight training at too high a level, you risk serious injury. You will also develop poor form, which will hinder your efforts and discourage you. Use this as a guideline: if you cannot lift the weight eight times with proper form, the weight is too heavy. Similarly, don't choose too light a weight; the last two or three repetitions of your set should be difficult.

POWER
Power is the rate of performing work. Power during a repetition is defined as the weight lifted times the vertical distance the weight is lifted divided by the time to complete the repetition. Power during a repetition can be increased by lifting the same weight the same vertical distance in a shorter period of time. Power can also be increased by lifting a heavier resistance the same vertical distance in the same period of time as a lighter resistance.

PROGRESS GRADUALLY
Increase reps before increasing resistance. Reduce rest intervals between sets to increase intensity.

PROGRESSIVE RESISTANCE
The principle of continually adding more weight to a specific exercise as your muscles become stronger to adapt to the heavier weights.

PROPER FORM
Focus on the proper motion of the exercise and concentrate on the specific muscles being used. Do not sacrifice proper form to lift heavier weight or to perform more repetitions. Proper form also means lifting in a smooth, fluid motion. If you feel strain elsewhere, you should re-evaluate the amount of weight you are lifting or have a qualified professional critique your exercise motion.

PROPER POSTURE
Maintaining proper posture will greatly reduce chances of injury and maximize exercise benefit. When standing always keep your feet shoulder-width apart. Do not lock your knees. Locking your knees can put unnecessary strain on them. Keep your back flat and straight, making sure not to twist or arch it in order to complete a repetition.

PROPER TECHNIQUE
To get the most out of strength training and to reduce the chance of injury, use proper weight training techniques. These include working your muscles through their full range of motion (but not locking any joints), lifting at a speed at which you can control the weight and stop easily if necessary.

RANGE OF MOTION
Moving through a complete range of motion (ROM) allows the muscles to stretch before contraction and increases the number of muscle fibers being recruited. This produces maximum contraction and force. By working the full ROM, flexibility will be maintained and possibly increased.

REPETITION
A repetition is one complete movement of an exercise. It normally consists of two phases: the concentric muscle action, or lifting of the resistance, and the eccentric muscle action, or lowering of the resistance.

REPETITION MAXIMUM (RM)
This is the maximum number of repetitions per set that can be performed at a given resistance with proper lifting technique. Thus, a set at a certain RM implies the set is performed to momentary voluntary fatigue. 1RM is the heaviest resistance that can be used for one compete repetition of an exercise. 10 RM is a lighter resistance that allows completion of 10 (but not 11) repetitions with proper exercise technique.

REST INTERVAL
Allow a brief pause between sets to give your muscles a chance to partially recover before working them again. For power and muscle size development allow a 3 to 4 minute rest interval between sets. For muscular endurance and definition allow a 30 second rest interval. For strength training allow a 60 to 90 second rest interval.

RISK SHOULD NOT EXCEED BENEFIT
If the risk of a specific exercise exceeds its potential benefit, it is best to stay on the conservative side. There are several ways to work specific muscle groups. Choose those that provide minimal risk. Ask a fitness professional for guidance.

ROUTINE
The specific exercises, sets, reps and weight for a specific body part.

SET
This is a group of repetitions performed continuously without stopping. While a set can be made up of any number of repetitions, sets typically range from 1 to 15 repetitions.

SMALL MUSCLE GROUP EXERCISE
Single joint movement and isolation exercises (i.e. bicep curls, tricep pressdowns and leg extensions).

SPEED OF MOVEMENT
Strength training movements should be slow and controlled. Do not use momentum to complete an exercise movement. Momentum puts unnecessary stress on tendons, ligaments and joints. Using momentum in your exercise movements does not develop increased strength.

STATIC STRETCHING
A stretching technique that involves holding a specific muscle or muscle group at a desired length for a certain period of time. This type of stretching is highly recommended.

STOP TRAINING IF YOU FEEL PAIN
If you feel pain during a specific exercise stop immediately. Any continuation may aggravate an existing injury. Re-evaluate your routine to make sure that you are doing a proper warm up. Decrease the amount of weight you are lifting. Talk to a qualified personal trainer, health professional or your doctor.

STRENGTH
Strength is the maximal amount of force a muscle or muscle group can generate in a specified movement pattern at a specified velocity of movement.

WARM UP
This cannot be stressed enough. Many workout-related injuries can be avoided by a proper warm up routine. Try to do a total body warm up before you start training. A good example of a total body warm up is using a stationary bike, treadmill, elliptical, rowing or skiing machine. It is especially important to warm up specific muscle groups you are going to be using. Your muscles need a 5 to 15 minute warm up as well as a brief cool down. This can be as simple as performing a warm up set of high repetitions and light weight (25% to 50% of your training weight) for each exercise.

WORKOUT
The routine, specific exercises, weights, sets, and reps for one or more body parts.

NUTRITION

Good nutrition is a diet in which foods are eaten in proper quantities and with the needed distribution of nutrients to maintain good Health. Malnutrition, on the other hand, is the result of a diet in which there is an under consumption, overconsumption, or unbalanced consumption of nutrients that leads to disease or an increased susceptibility to disease. What is stated in the above definitions is the fact that proper nutrition is essential to good health. A history of poor nutritional choices will eventually lead to poor health consequences.

There are many substances necessary for the proper functioning of the body. Nutrients are the substances that the body requires for the maintenance of health, growth, and to repair tissues. Nutrients can be divided into six classes: carbohydrates, fats, proteins, vitamins, minerals and water. Carbohydrates, or "carbs", are nutrients that are composed of carbon, hydrogen and oxygen, and are essential sources of energy in the body. Grains, vegetables, and fruits are excellent sources of carbohydrates. It is recommended that at least 55% to 60% of the total number of calories consumed come from carbohydrates (American Diabetes Association, Diabetes & Exercise, 1990). It is further recommended that 10% or less of the total calories consumed come from simple sugars like a candy bar.

One of the many benefits of consuming foods that are high in complex carbohydrates, such as rice, pasta, and whole grain breads, is that they also typically contain dietary fiber. Dietary fiber is a term used when referring to substances found in plants that cannot be broken down by the human digestive system. Although fiber cannot be digested, it is important in helping to avoid cancers of the digestive system, hemorrhoids, constipation, and diverticular disease because it helps food move quickly and easily through the digestive system. It is recommended that people consume 20 to 30 grams of fiber per day (American Diabetes Association, Diabetes & Exercise, 1990). Excellent sources of dietary fiber are grains, vegetables, legumes, and fruit.

Fats are an essential part of a healthy diet and serve vital functions in the human body. Among the functions performed by fats are temperature regulation, protection of vital organs, distribution of some vitamins, energy production, and formation of component parts of cell membranes. Like carbohydrates, fats are composed of carbon, hydrogen, and oxygen. However, their chemical structure is different.

Both animals and plants provide sources of fat. Saturated fats come primarily from animal sources and are typically solid at room temperature. Plant sources of saturated fats are palm oil, coconut oil, and cocoa butter. A high intake of saturated fats is directly related to increased cardiovascular disease. Unsaturated fats are typically liquid at room temperature. Corn, peanut, canola, and soybean oil are sources of unsaturated fats. It is recommended that no more than 30% of one's diet be composed of fats. Ten percent or less of the total calories consumed should come from saturated fats. One way to reduce saturated fat intake would be to substitute margarine for butter.

Proteins are substances composed of carbon, hydrogen, oxygen, and nitrogen. Proteins are made by combining amino acids. Amino acids are nitrogen-containing building blocks for proteins that can be used for energy. Amino acids can combine in innumerable ways to form proteins, and it is estimated that tens of thousands of different types of proteins exist in the body. It is the ordering of the amino acids that provides the unique structure and function of proteins.

There are proteins in both meat products and plant products. Animal sources of protein such as milk, meat and eggs contain the eight essential amino acids (amino acids that the body cannot synthesize and therefore must be ingested). Plant sources of protein such as beans, starchy vegetables, nuts, and grains do not always contain all eight amino acids. Because of this, vegetarians must consume a variety of protein-containing foods. It is recommended that proteins make up 10% to 15% of one's daily calories. This will ensure adequate protein for growth, maintenance, and the repair of cells. Protein requirements for adults are not as high as those recommended for infants, children, and young adults. Note: individuals who are training intensely will have an increase in their protein requirements.

Vitamins are organic substances that are essential to the normal functioning of the human body. Although vitamins do not contain energy to be used by the body, these substances are essential in the metabolism of fats, carbohydrates and proteins. Because of the critical role vitamins play, it is necessary that they exist in proper quantities in the body.

Minerals are inorganic molecules that serve a variety of functions in the human body. The minerals that appear in the largest quantities (calcium, phosphorus, potassium, sulfur, sodium, chloride, and magnesium) are often called macrominerals. Other minerals are also essential to normal functioning of the body, but because they exist in smaller quantities (chromium, iron, copper, fluoride, iodine, manganese, molybdenum, selenium, and zinc) they are called microminerals.

A mineral that is often consumed in inadequate amounts by Americans is calcium. Calcium is a mineral important in the mineralization of bone, muscle contraction, and the transmission of nerve impulses. Osteoporosis is a disease characterized by a decrease in the total amount of bone mineral in the body and by a decrease in strength of the remaining bone. This condition is most common in the elderly but may also exist in younger people who have diets inadequate in calcium or vitamin D or both.

Iron is another mineral that is often under consumed by Americans. This is especially true of women. The oxygen-carrying properties of hemoglobin (blood) depend on the presence of iron. Anemia is a condition characterized by a decreased capacity to transport oxygen in the blood, and is also common in those lacking a sufficient amount of iron intake. Red meat and eggs are excellent sources of iron. Additionally spinach, lima and navy beans, and prune juice are excellent vegetarian sources of iron.

Sodium, on the other hand, is a mineral that many Americans over-consume. High sodium intake has been linked with hypertension, as well as high blood pressure. People can substantially reduce their sodium intake by limiting consumption of processed foods and decreasing the amount of salt added to foods when cooking.

In conclusion...don't forget hydration. Water is considered an essential nutrient because of its vital role in the normal functioning of the body. Water contributes approximately 60% of the total body weight and is essential in creating an environment in which all metabolic processes occur. Water is necessary to regulate temperature and to transport substances throughout the body.

Follow these basic nutritional guidelines for gains in strength and lean muscle mass:

1. Choose your foods carefully. Try getting your carbohydrates from sources such as rice, vegetables, beans, whole grains, pasta and fruit. Good protein sources include fish, chicken, turkey, lean meat and low-fat or nonfat dairy products.
2. Minimize your fat intake.
3. Drink a minimum of 10 eight-ounce glasses of water each day.
4. Eat four to six small meals a day, about three hours apart. Small meals are more easily digested and result in greater nutrition absorption.
5. Avoid eating junk food and fast food.
6. Time your protein intake of 40-55 grams approximately 75 minutes after your workout.
7. Immediately following your workout, replenish your glycogen stores with approximately 50-75 grams of carbohydrates.

For more information on nutrition visit your local library or book store. There are many excellent books available.

EXERCISE PRESCRIPTION

Sets

Sets are defined as a combination of any number of reps of one exercise. The number of sets used in a workout is directly related to training results. Typically, two to three sets are used by intermediate and advanced lifters to achieve optimum gains in strength. Experts agree that multiple-set systems work best for the development of strength and muscular endurance. Gains will be made at a faster rate by using a multiple-set system than gains achieved through a single-set system. The use of a single set of an exercise is recommended and very effective for individuals who are untrained or just beginning a resistance training program. One-set programs might also be used for simple maintenance once you are in shape. It is important to note that low-volume set programs will increase strength in untrained individuals, but more complex physiological adaptations, such as gains in muscle mass, tone, size, and performance usually requires higher-volume set training for the best results. Multiple sets of an exercise present a more intense training stimulus to the muscles during each set. Once your desired initial fitness level has been achieved, multiple-set performances of the exercise using the proper resistance (with specific rest periods between sets) will take you to the next level of strength training, endurance, and muscular development.

Resistance Used

The amount of resistance used for a specific exercise is probably the most important variable in resistance training. When designing a resistance training program, a weight for each exercise must be chosen. The use of repetition maximums (RM): the exact resistance that allows only a specific number of repetitions to be performed, is probably the easiest method for determining a resistance. Typically, one uses a training RM target or a RM target zone. Example: If your RM zone is 8 to 12 repetitions and you cannot lift the weight at least 8 times using proper form, the weight is too heavy. On the other hand, if you can easily lift the weight 12 times, the weight is too light. In either case, the weight needs to be changed. As the strength level of the lifter changes over time, the resistance is adjusted so a true RM target or target zone resistance is used.

Rest Periods Between Sets and Exercises

One frequently overlooked variable in exercise prescription is the length of the rest period between sets and between different exercises. Your desired fitness goals will normally determine the amount of time you allow your body to rest. Exercises involving high repetitions (15 to 20) and a high number of sets (3 to 4) with short rest periods (30 seconds) between sets will raise metabolic demands. This in turn will burn excess body fat and increase muscular endurance. Short rest periods are a characteristic of circuit weight training, and the resistances used are typically lighter. This type of workout is best for trimming body fat and toning muscle. Exercises with heavier resistance and fewer sets usually have a longer resting period between sets. The results of using this method are normally increased muscular strength and mass. If the desired outcome is to gain overall muscle mass, your exercise prescription should lean toward a higher weight resistance doing 2 to 6 repetitions per set, with a rest period of 3 to 4 minutes between each set.

Rest Periods Between Workouts

The amount of rest between training sessions depends on the recovery ability of the individual. Most experts agree that three workouts per week with one day of rest between sessions allows adequate recovery, especially for the beginner. If the resistance training is not excessive, only moderate amounts of delayed muscular soreness should be experienced one day after the session. As the lifter advances and his or her body is better able to tolerate and recuperate from the resistance exercise sessions, the frequency of training can be increased. Well-conditioned athletes may be capable of, and need training frequencies of 4 to 5 days in a row to improve significantly and achieve their desired goals. When consecutive training day sequences are used, it is usually beneficial to do different exercises for the same muscle groups and use different resistances for the exercises. When training is performed on consecutive days, it often involves the use of a split routine (different body parts exercised each day), or a split program (different exercises for the same body part performed each day). There are many books available at the library or your local book store for the intermediate and advanced weight training enthusiast. It is also recommended that you work with a qualified personal trainer to achieve your ultimate goals.

Order of Exercise

Leaders in the field of strength and conditioning believe that working the larger muscle groups first (chest, back, legs), should take priority over training the smaller muscle groups (biceps, triceps, deltoids, calves). The reason behind this exercise order is that the exercises performed in the beginning of the workout are the ones that are going to require the greatest amount of muscle mass to perform. Hence, exercising the smaller muscle groups first will deplete the body of the energy necessary to stimulate the larger muscle groups. Arm-to-leg ordering allows for some recovery of the arm muscles while the leg muscles are exercised. “Stacking” exercises is a common practice among body builders as a way to attempt to bring about muscle hypertrophy. Stacking is loading up different exercises on the same muscle group (ie. standing bicep curls, preacher curls, one arm concentration curls). The exercise order will have a significant impact on the training stimulus stress level in a training session.

Scheduling Training

Finding the time to do it is one of the most difficult aspects of a training program. Once you have established a time to workout you should plan a training routine based on what muscles to involve on which day. As previously discussed, the larger muscle groups such as the chest, back, and legs should take priority over working the smaller muscle groups. Give your muscles at least 48 hours (but no more than 72 hours) of rest in between sessions.

TRAINING TIPS FOR BEGINNER'S

ARE YOU A "BEGINNER"?

A beginner can be classified as someone who has never touched a weight, may have lifted for a while, but has taken a substantial amount of time off, or has not consistently trained over the last six months. If you happen to fall into any of these categories, pay close attention, because the following information will be detrimental to the start of your training program.

As a beginner, one of the most common mistakes is doing too much. Because beginners often make good gains quickly, many fall into the trap of thinking that more is better. This may be true later in the training equation, but not for the novice. Some of the most common injuries occur as a result of taking on too much, too soon.

One of the questions most frequently asked is, "How much weight should I use?" Determining the weight for each exercise will vary from person to person. The weight for each exercise will be lifted in sets and repetitions. Repetition is defined as one execution of any exercise. A set is a combination of any number of repetitions of one exercise.

Experimentation at each exercise station is a good technique for determining the starting weight for an individual. Take the chest press exercise for example. Performing this exercise with a weight that can be pressed 30 times with ease will not help you achieve any particular goals. Adding the appropriate amount of weight that will allow you to perform a maximum of 8 to 12 repetitions will help you obtain the results you desire.

On the other hand, if you put too much weight on the press bar and press it 4 or 5 times, then common sense will tell you to reduce the weight, wait a few minutes, then try again. Remember, never sacrifice perfect form just for the sake of lifting heavier weight. This is a sure-fire, one-way trip down the road to injury. Making muscles work hard, with proper form is the name of the game.

Now that you understand how to test each station for your starting amount of resistance, you should know which muscles to train first. Training the large muscles groups first, such as your chest, legs, and back, should be done before training your small muscle groups like the arms, shoulders, and calves.

Starting with the large muscle groups will help you achieve and maintain quicker gains. The large muscles groups will require more stimulation and a higher intensity level than the smaller muscle groups. Training your arms with all-out intensity and training your chest immediately afterwards will not leave you with enough energy necessary to properly stimulate the muscle fibers in your chest. Moreover, because the triceps are required in chest press movements, your arm muscles will fail much more quickly than your chest muscles, which will also hold back your chest training.

As a beginner, you will find that your gains will come quickly. The excitement and enthusiasm that comes with these gains may cause you to spend even more time on your gym. Take it easy! Remember, just as too little exercise won't stimulate muscle growth...too much exercise won't either.

You need to give your body plenty of rest, especially if you're still sore from the last workout. This will keep you fresh and growing stronger. NEVER TRAIN A BODY PART THAT IS STILL SORE FROM THE PREVIOUS WORKOUT. Performing some flexibility exercises is a good way to keep the blood flowing through the sore area, but do not train these muscles again until you are feeling recovered.

Speaking of soreness, there is something else that you, as a beginner, should be aware of: If you work out - your muscles will get sore. The majority of muscle soreness comes from microtears and a build up of lactic acid in the muscle fibers. This is the result of intense exercise. Muscle soreness can become a problem when the body is pushed too fast and too quickly. As a beginner, tendons, ligaments, joints and tissues have not yet developed the ability necessary to recover from high intensity exercise. A general warm up of stretching and light calisthenics prior to exercise can possibly reduce the amount of post-exercise muscle soreness. A good cool down of stretching and cardio work may also decrease muscle soreness.

Now that we have laid a good foundation of the "do's and don'ts", let's get into something a little more specific. The Beginner's Strength Training Program. One of the best beginner's programs is the three-days-a-week routine. For example, do a whole-body workout on Monday, Wednesday and Friday. Use the other days for rest and recuperation. As previously discussed, you want to start with the large muscle groups first, then move on to the small muscle groups. Perform one exercise per muscle group that consists of 2 or 3 sets of 8 to 12 repetitions. Follow this routine for at least six to eight weeks in order for your body to establish the proper stimulation for growth.

One or two exercises per muscle group may not sound like enough to produce any results, but if you're a beginner - it most definitely will. As you continue to train and your body adapts to your exercise routine and recuperative demands you place upon it, you'll be able to add more sets and exercises to your routine.

Another point that is highly recommended is the assistance of a personal trainer. Through the use of a personal trainer you can learn the mechanics and techniques of exercise, how to use proper form to avoid injury and details on proper nutrition. A good trainer will also provide MOTIVATION.

When choosing a personal trainer, here are some tips: Choose an individual that is certified through an accredited association. This is a good way to ensure that he or she is qualified to give you what you need. Also, take a look at what kind of shape they are in. If you want to be in great shape, look for a trainer who is in great shape. They will know what it takes to get results. Here are a few recommended organizations:

- National Strength & Conditioning (719) 632-6722
- American College of Sports Medicine (317) 637-9200
- National Academy of Sports Medicine (312) 929-5101

Sample Workout Routine When Training For STRENGTH

Exercises	Reps	Sets
Leg Press / Squat	6 to 10	3 or 4
Leg Extension	8 to 12	2 or 3
Leg Curl	8 to 12	2 or 3
Calf Raise	8 to 12	2 or 3
Bench / Chest Press	6 to 10	2 or 3
Incline Press	8 to 12	2 or 3
Incline Pec Fly	8 to 12	2 or 3
Lat Pulldown	8 to 12	2 or 3
Seated Row	8 to 12	2 or 3
Military Press	8 to 12	2 or 3
Upright Row	8 to 12	2 or 3
Bicep Curl	8 to 12	2 or 3
Tricep Pressdown	8 to 12	2 or 3
Tricep Extension	8 to 12	2 or 3
Resistance Ab Crunch	20 to 30	2 or 3
Resistance Oblique Crunch	20 to 30	2 or 3

Rest period between sets should be about 60 to 90 seconds.

COMMON TRAINING MISTAKES

1. Lack of Adequate Warm-Up and Inadequate Flexibility
A warmed muscle is a more flexible muscle that's better able to lift heavier weights and work in a full range of motion. Those warmed muscles also greatly reduce your chance of training injuries.

2. Improper Form
The use of improper form is a good way to keep you out of the gym. Not only does improper form cause injuries, it also doesn't allow for adequate muscle-fiber stimulation.

3. Too Much Weight
Overloading the muscles is a good way to promote muscular growth, but packing on too much weight can cause a snowball effect of improper form, injuries, and down time from your routine.

4. Not Enough Weight
Not lifting enough weight will prohibit the stimulation necessary for muscular growth. Keep challenging your self to lift heavier weights on a progressive basis always maintaining proper form.

5. Not Enough Rest Between Workouts
If you're still sore from your previous workout, you don't have to go back at it just because it's your scheduled day. Give your body an extra day off to fully recover so when you return you will be able to give 100%.

6. Overtraining
It's not how much time you spend working out, but what you accomplish that really matters. Try to keep your resistance workouts within 45 to 60 minutes per session.

7. Poor Diet and Supplementation
Eating the right combination of foods, along with good supplementation, will greatly promote your success. Make your diet 50 percent carbohydrate, 35 percent protein, 15 percent fat, and take a good multivitamin and protein / carbohydrate supplement. Don't forget the water- at least 80 ounces a day! Hydration is critical.

8. Stale Routines
Your body adapts very quickly to the demands placed upon it. That's why you should have a variety of exercises and routines that you can do. To keep your body growing, you've got to keep it off-guard. Changing your exercises and routines is a sure way to do it.

PERSONAL PROGRAM

It is important to first establish specific and realistic goals. You should determine your long term goal and then set a series of short term goals that will help you attain your long term goal. The most common goals are:



Endurance & Definition



Increase Strength



Power & Muscle Mass

If your personal goals involve losing a considerable amount of body fat you will need to focus more on aerobic exercise and weight training for muscular endurance and definition. If your goals involve a large increase in muscle size you will need to focus on power and muscle mass weight training. Depending on your goals, you will have different nutritional requirements.

Once you have determined your personal goals, you will need to set up a schedule that helps you attain them. Set up a schedule that includes the number of workouts per week, the type of workout activity, the time of day for each workout, and the actual workout program. Don't forget to factor in the warm up and cool down periods. You may have to modify your current lifestyle to accommodate your new schedule. It's very important to include the following basic components to achieve successful results:



STRETCHING



AEROBIC EXERCISE



WEIGHT TRAINING

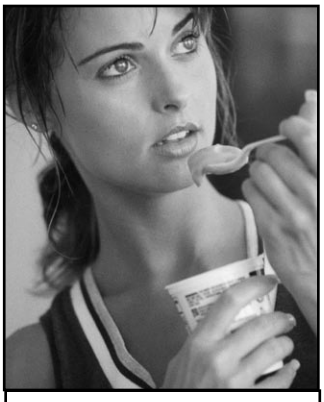

NUTRITION

DETERMINE YOUR TRAINING METHOD

There are three basic types of weight training methods:

1. Training for muscular endurance and definition
2. Training for strength
3. Training for power and muscle mass

You should select a training method that reflects both your present fitness level and your long term goals. You should begin carefully and with proper professional guidance. You can always move from one training method to another as you progress.

If you are beginner, you should start slowly and carefully, gradually increasing the frequency and intensity of your training. Always play it safe – be realistic about your goals and your schedule. Realistic goals are safer and easier to follow.

Which is the right training method for you? First, take a look at your present physique and determine your objectives. Do you want a trim, toned, well-defined body? Are you involved in a sport where speed, strength and power are most important? Maybe you want bulging muscles and a terrific V-shape torso so you look great on the beach. Once you make a decision on what the final results should be, you can set up your personal program using the proper training method to achieve your goals.

Which training method is right for you?

FOR MUSCULAR ENDURANCE & DEFINITION

This training method incorporates achieving and maintaining a high cardiovascular (heart) rate and helps burn away excess fatty tissue. It also adds muscle definition and muscular endurance to your entire body. Exercises are most commonly performed for 15 to 20 repetitions and 3 to 4 sets using a light to moderate weight. The rest period between sets should be about 30 seconds. These short rest intervals will help maintain an elevated heart rate and prevent the muscles from cooling down.

FOR STRENGTH

This type of training is the most popular of the three and is designed specifically for increasing strength throughout the muscle and the muscle-tendon junction. This type of training is especially important for athletes. Normally, exercises are performed using moderate to heavy weight for 8 to 12 repetitions and 2 to 3 sets. The rest period between sets should be from 60 to 90 seconds. This allows a degree of muscle recovery before you hit them again.

FOR POWER AND MUSCLE MASS

This is the method most often used by bodybuilders and is recommended only for the intermediate and advanced lifter. The weights used are heavy — this shocks the muscles and stimulates a more rapid increase in muscle size. Usually exercises are performed for 2 to 6 repetitions and 3 to 4 sets using very heavy weight. The rest period between sets should be from 3 to 4 minutes. The prolonged rest periods allow ample time for recovery between sets.

DESIGNING YOUR PERSONAL ROUTINE

FIRST:
You need to decide which of the above training methods is best suited to accomplish your personal goals.

SECOND:
Study the exercise poster that came with your Body-Solid machine and select one or two exercises per body part (body parts are listed to the left of the exercise pictures). Be sure to include exercises for all body parts. If you leave out certain body parts your exercise routine and your body will not be balanced. If you are trying to increase muscle mass or increase strength to a muscle group it is alright to add extra exercises to the area you are particularly concerned about.

THIRD:
Coordinate your body part exercise program and your personal schedule. If you select one exercise per body part you can normally do your entire routine in the same workout. If you choose to do more than 12 exercises you may decide to divide your workout routine into upper and lower body exercises. You can split your schedule to work upper body one day and lower body the next day. Remember to rest each particular muscle group 48 hours before working it again.

FOURTH:
Order the exercises in your routine so you are working the large muscle groups first and the small muscle groups last.

FIFTH:
Keep a record! Write down the exercises, number of sets, number of reps and the amount of resistance (weight).

Beginner's Sample Workout Routine When Training For Definition

Exercise	Reps	Sets
Chest Press	15 to 20	3 or 4
Lat Pulldown	15 to 20	3 or 4
Shoulder Press	15 to 20	3 or 4
Tricep Pressdown	15 to 20	3 or 4
Bicep Curl	15 to 20	3 or 4
Leg Press/Squat	15 to 20	3 or 4
Leg Extension	15 to 20	3 or 4
Leg Curl	15 to 20	3 or 4
Calf Raise	15 to 20	3 or 4
Ab Crunch	20 to 30	3 or 4

Rest period between sets should be about 30 seconds.

EXERCISE TIPS

Listed below are Body-Solid's picks of the best exercises you can do for each body part. These exercises can be done using free weights, machines and multi-station gyms. Learn to do each exercise in proper form. You can make substitutions in your training and try variations of each using different Body-Solid grips, cable attachments and accessories to slightly change the emphasis of a particular exercise. Note: Many movements, especially multijoint exercises, work more than one muscle group. For example, your front deltoids and triceps are stimulated during bench / chest pressing movements.

CHEST

This powerful muscle group is the cornerstone of a well-developed upper body. To most thoroughly work your pecs, include both pressing and fly movements and vary the angle of the bench from decline to flat to incline.

BENCH / CHEST PRESS
INCLINE PRESS
DECLINE PRESS
PEC FLY
INCLINE FLY
DECLINE FLY
CABLE CROSSOVER
DIPS

SHOULDERS

The shoulder joint, which has the greatest range of motion of all joints in the body, is best worked by training all three deltoid heads. Include a pressing movement followed by a raise for each of the three heads.

SHOULDER PRESS
BEHIND THE NECK PRESS
FRONT DELTOID RAISE
LATERAL (SIDE) DELTOID RAISE
BENT-OVER LATERAL DELTOID RAISE
REVERSE PEC-FLY

UPPER BACK

A powerful upper back is marked by both middle-back thickness and width (the sought-after V-taper). This is best achieved by combining various rows with pull-downs and pull-ups. Remember to vary your grip to slightly change the stimulus.

PULL UP
UPRIGHT ROW
LAT PULLDOWN
SEATED ROW
BENT OVER ROW
HIGH ROW
REVERSE GRIP PULLDOWN

TRAPS

A signature muscle of a strong upper back, well-developed traps help prevent neck injury. Shrug movements should be done with heavy weights in a straight up-and-down motion.

STRAIGHT BAR SHRUG
DUMBBELL SHRUG
BEHIND THE BACK SHRUG
UPRIGHT ROW

LOWER BACK

Important not only for spinal protection but also because it's the seat of power for many exercises. If you spend a great deal of time crunching for abs, you need to balance your training for complete development and muscular balance.

PULL UP
UPRIGHT ROW
LAT PULLDOWN
SEATED ROW
BENT OVER ROW
HIGH ROW
REVERSE GRIP PULLDOWN

TRICEPS

This three-headed muscle on the back of your arm is involved in extension of the elbow. Like the biceps, the triceps cross the elbow and shoulder joints. Because of this, you can and should work the triceps through a variety of angles to ensure complete development.

LYING TRICEPS EXTENSION
CABLE TRICEPS EXTENSION
CABLE TRICEPS PRESSDOWN
CLOSE-GRIP BENCH PRESS
REVERSE-GRIP PRESSDOWN
TRICEPS PRESS
DIPS

BICEPS / FOREARMS

A two-headed muscle, the biceps' primary focus is to flex your elbow and supinate your wrist. The ability to build your biceps peak is largely genetic, but exercises that maximally stress the short head will help.

BICEPS
- **STANDING BICEP CURL**
- **SEATED BICEP CURL**
- **INCLINE CURL**
- **PREACHER CURL**
- **CONCENTRATION CURL**
- **ONE-ARM CABLE CURL**

FOREARMS
- **WRIST CURL**
- **REVERSE WRIST CUR**L

ABDOMINALS

The rectus abdominus has upper and lower regions. Include both upper and lower ab movement to emphasize those areas, and do twisting movements to work the obliques for complete development.

UPPER AB REGION
- **CABLE AB CRUNCH**
- **DECLINE BENCH CRUNCH**

LOWER AB REGION
- **REVERSE CRUNCH**
- **HANGING KNEE RAISE**
- **HIP THRUST**

OBLIQUES
- **CABLE SIDE BEND**
- **OBLIQUE CRUNCH**

THIGHS / GLUTES

The main muscles of the thighs are the quadriceps which are composed of four muscles. You have several others near the hip joint, including the body's largest muscle group, the gluteals. Multi-joint movements (in which action occurs at both the hip and knee joints) are your best choice to work these muscles.

BACK SQUAT
FRONT SQUAT
LEG PRESS
LUNGE
REVERSE LUNGE
STEP-UP
LEG EXTENSION (does not work glutes)

HAMSTRINGS

On the back of the thighs, the hamstrings balance the quads and allow for a wide range of movement. Good exercise choices include those that work the hamstrings and both the hip and knee joints.

DEADLIFT
STIFF-LEGGED DEADLIFT
GOOD MORNING
LYING LEG CURL
SEATED LEG CURL
ONE-LEGGED STANDING LEG CURL

CALVES

Calves consist of two major muscles, the gastrocnemius and soleus. The latter is best worked when the knee is flexed, as in the seated calf raise.

STANDING CALF RAISE
SEATED CALF RAISE
DONKEY CALF RAISE
LEG PRESS CALF RAISE
HACK SQUAT CALF RAISE

ANATOMY CHART

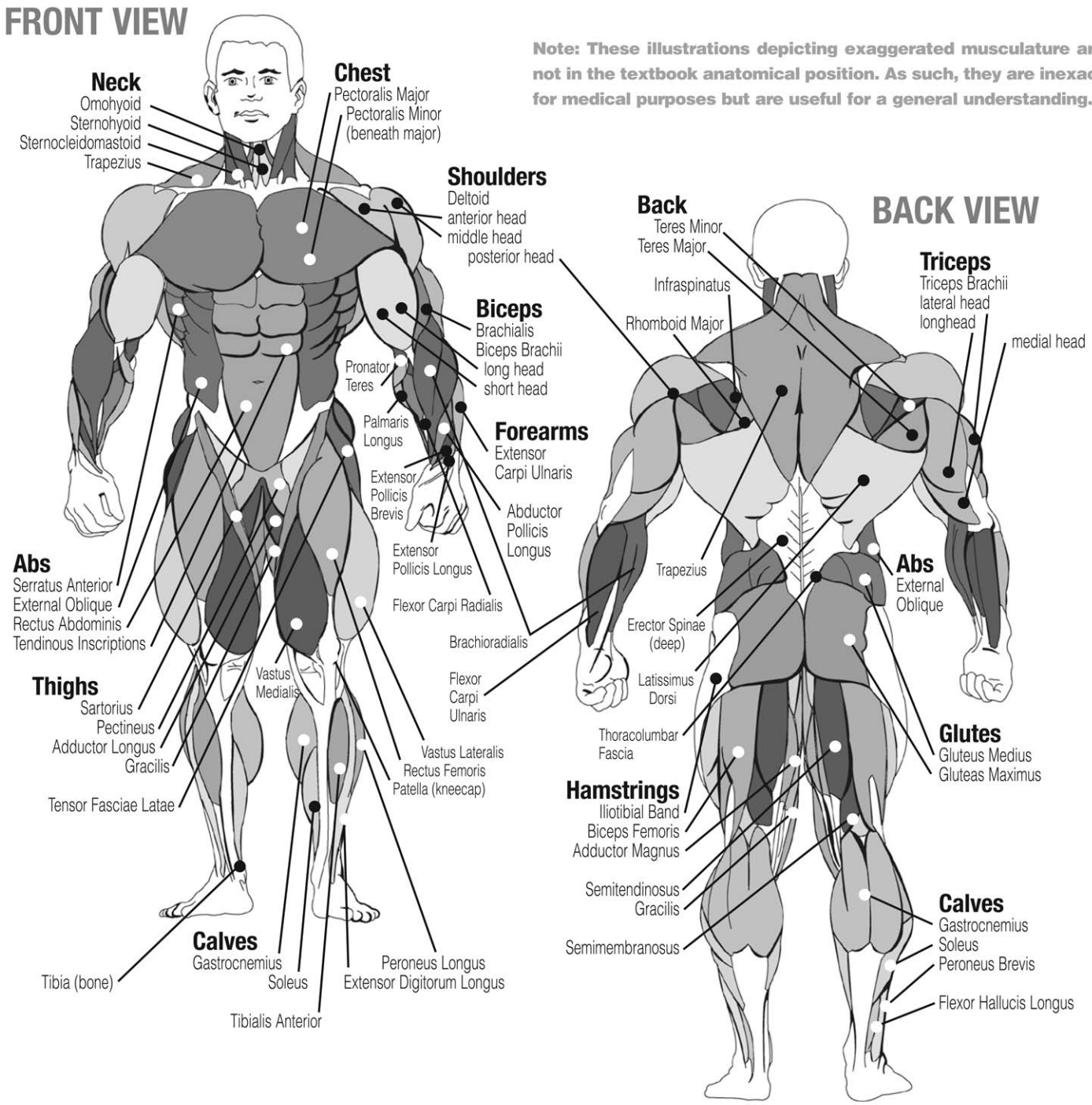

FITNESS GOALS

SHORT-TERM GOALS

Date Set _____ **Date Accomplished** _____

Goal _____

_____

_____

_____

Reward** _____

Date Set _____ **Date Accomplished** _____

Goal _____

_____

_____

_____

Reward** _____

Date Set _____ **Date Accomplished** _____

Goal _____

_____

_____

_____

Reward** _____

LONG-TERM GOALS

Goal _____

_____

_____

_____

_____

_____

Reward! _____

_____

_____

* Make several copies of this page to keep track of your goals and accomplishments.
** Don't forget to reward yourself for a job well-done!

BEGINNER'S SAMPLE WORKOUT ROUTINE

Keep track of your changes and improvements. It's a great motivational tool!*

S = Sets
R = Repetitions per set
W = Weight used

Date																		
Exercise	S	R	W	S	R	W	S	R	W	S	R	W	S	R	W	S	R	W
BENCH / CHEST PRESS																		
LAT PULLDOWN																		
SHOULDER PRESS																		
TRICEP PRESSDOWN																		
BICEP CURL																		
LEG PRESS / SQUAT																		
LEG EXTENSION																		
LEG CURL																		
CALF RAISE																		
AB CRUNCH																		
TOTALS																		

SAMPLE WORKOUT ROUTINE WHEN TRAINING FOR STRENGTH

Keep track of your changes and improvements. It's a great motivational tool!*

S = Sets
R = Repetitions per set
W = Weight used

Date																		
Exercise	S	R	W	S	R	W	S	R	W	S	R	W	S	R	W	S	R	W
LEG PRESS / SQUAT																		
LEG EXTENSION																		
LEG CURL																		
CALF RAISE																		
BENCH / CHEST PRESS																		
INCLINE PRESS																		
INCLINE PEC FLY																		
LAT PULLDOWN																		
SEATED ROW																		
MILITARY PRESS																		
UPRIGHT ROW																		
BICEP CURL																		
TRICEP PRESSDOWN																		
TRICEP EXTENSION																		
RESISTANCE AB CRUNCH																		
RESISTANCE OBLIQUE CRUNCH																		
TOTALS																		

INTERMEDIATE AND ADVANCED LIFTERS... Design your personal strength training program. Keep track of your changes and improvements. It's a great motivational tool!*

S = Sets
R = Repetitions per set
W = Weight used

Date																		
Exercise	S	R	W	S	R	W	S	R	W	S	R	W	S	R	W	S	R	W
TOTALS																		

STRETCHING

The following pages show illustrations with descriptions of static stretching for warm up and post-exercise cool down.
Remember... stretch your large muscle groups first and do all stretches in a smooth, slow, controlled manner.

Flexibility is an important component of physical fitness and needs to be addressed in a resistance training program. The two main purposes for stretching are injury prevention and a faster rate of recovery from exercise. Stretching should be performed in both the warm up and cool down phases of a training session. A good general guideline is that each workout session should be preceded by 5 to 15 minutes of general warm up, followed by 8 to 12 minutes of stretching, and concluded with 4 to 5 minutes of post-exercise stretching.

A regular stretching program will loosen muscle tissue, allowing an increased range of motion. This helps prevent microtears at the muscle-tendon junction. Almost 90% of all injuries from muscle strain occur at the muscle-tendon junction. Repeated injury at this junction can lead to a build-up of scar tissue, which impedes range of motion and adds stress to the joints.

Begin by stretching the major muscle groups first. Move in and out of your stretches with smooth, slow, controlled motion. Hold the stretch for at least 10 seconds when you feel you have reached your muscle's maximum distance. Do not use fast, hurried or reckless motions when stretching. Fast and bouncy motions will increase the risk of injury.

The most common and most popular type of stretching is the static stretching technique. This form of stretching involves voluntary, complete relaxation of the muscles while they are elongated. A static stretch is a constant, steady stretch in which the end position is held for 10 to 30 seconds. This technique is popular because it is easy to learn, effective, and accompanied by minimal soreness with the least risk of injury.

Ballistic stretching involves a bouncing or bobbing movement during the stretch. The final position in the movement is not held. Ballistic stretching is unpopular because of the increased amount of delayed muscle soreness and the possibility of injury during the stretching exercise. Ballistic stretching is not recommended.

A dynamic stretch involves flexibility during sport specific movements. Dynamic stretching is similar to ballistic stretching in that it utilizes movement, but dynamic stretching includes movements that may be specific to a sport or movement pattern. Dynamic stretching is most common among track and field athletes, but is also used in other sports, such as basketball and volleyball. An example of dynamic stretching would be a track sprinter performing high knees with an emphasis on knee height and arm action, not on horizontal speed.

UPPER BACK

Cross Arm in Front of Chest
MUSCLE(S) AFFECTED: ***latissimus dorsi and teres major***

1. Stand or sit with the right arm slightly flexed (15° to 30°) and adducted across the chest.
2. Grasp the upper arm just above the elbow, placing the left hand on the posterior side of the upper arm.
3. Pull the right arm across the chest (toward the left) with the left hand.
4. Hold for 10 seconds.
5. Repeat with the left arm.



Stretching the upper back

UPPER BACK

Arms Straight Up Above Head (Pillar)
MUSCLE(S) AFFECTED: ***latissimus dorsi and wrist flexors***

1. Stand with arms in front of torso, fingers interlocked with palms facing each other.
2. Slowly straighten the arms above the head with palms up.
3. Continue to reach upward with hands and arms.
4. While continuing to reach upward, slowly reach slightly backward.
5. Hold for 10 seconds.



Stretching the shoulders, chest and upper back

LOWER BACK

Spinal Twist (Pretzel)
MUSCLE(S) AFFECTED: ***internal oblique, external oblique and spinal erectors***

1. Sitting with legs straight and upper body nearly vertical, place right foot on left side of left knee.
2. Place back of left elbow on right side of right knee, which is now bent.
3. Place right palm on floor 12 to 16 inches behind hips.
4. Push right knee to the left with left elbow while turning shoulders and head to the right as far as possible. Try to look behind the back.
5. Hold for 10 seconds.
6. Repeat with left leg.



Stretching the lower back and sides

LOWER BACK

Semi-Leg Straddle
MUSCLE(S) AFFECTED: ***spinal erectors***

1. Sitting, knees flexed 30 to 50 degrees, let the legs totally relax.
2. Point the knees outward; the lateral side of the knees may or may not touch the floor.
3. Lean forward from waist and reach forward with extended arms. Hold position for 10 to 15 seconds.
4. Bending and relaxing legs decreases hamstring involvement and increases lower back stretch.



Stretching the lower back from seated position

SIDES

Side Bend with Straight Arms
MUSCLE(S) AFFECTED: ***external oblique, latissimus dorsi and serratus anterior***

1. Stand with feet 14 to 16 inches apart.
2. Interlace the fingers with palms facing each other.
3. Reach upward with straight arms.
4. Keeping arms straight, lean from waist to left side. Do not bend knees.
5. After moving as far as possible, hold for 10 seconds.
6. Repeat to the left side.



Stretching the sides, upper back and shoulders

SHOULDER

Seated Lean-Back
MUSCLE(S) AFFECTED: ***deltoids and pectoralis major***

1. Sitting with legs straight and arms extended, place palms on floor about 12 inches behind hips.
2. Point fingers away (backward) from body.
3. Slide hands backward and lean backward.
4. Hold for 10 seconds.



Stretching shoulders joints

CHEST

Straight Arms Behind Back
MUSCLE(S) AFFECTED: deltoids and pectoralis major

1. Standing, place both arms behind back.
2. Interlock fingers with palms facing each other.
3. Straighten arms fully.
4. Slowly raise the straight arms.
5. Hold for 10 to 15 seconds.
6. Keep head upright and neck relaxed.



Stretching the chest

Remember... do all stretches in a smooth, slow, controlled manner.

POSTERIOR OF THIGH

Sitting Toe Touch
MUSCLE(S) AFFECTED: ***hamstrings, spinal erectors and gastrocnemius***

1. Sit with the upper body nearly vertical and legs straight.
2. Lean forward from waist and grasp toes with each hand, slightly pull toes towards the upper body, and pull chest towards leg. (If you are very stiff, try to grasp the ankles.) Hold for 10 seconds.
3. Release toes and relax foot.
4. Grasp ankles and continue to pull chest towards legs. Hold for 10 seconds.
5. Still grasping the ankles, point away from body and conti pull chest towards legs. Hold for 10 seconds.

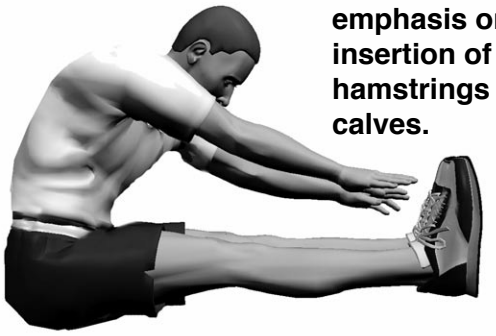

Stretching the hamstrings with emphasis on insertion of the hamstrings and calves.



Stretching the hamstrings with emphasis on the middle portion.



Stretching the hamstrings with emphasis on the upper portion.

GROIN

Butterfly
MUSCLE(S) AFFECTED: ***adductors and sartorius***

1. Sitting with the upper body nearly vertical and legs straight, flex both knees as the soles of the feet come together.
2. Pull feet toward body.
3. Place hands on feet and elbows on legs.
4. Pull torso slightly forward as elbows push legs down.
5. Hold for 10 to 15 seconds.



Stretching the groin.

GROIN

Straddle (Spread Eagle)
MUSCLE(S) AFFECTED: ***gastrocnemius, hamstrings, spinal erectors, adductors and sartorius***

1. Sit with the upper body nearly vertical and legs straight, and spread legs as far as possible.
2. With right hand, grasp toes of right foot and pull on toes slightly, while pulling chest toward right leg. Hold for 10 seconds.
3. Release toes and relax foot.
4. Grasp ankle and continue to pull chest toward right leg. Hold for 10 seconds.
5. Point toes away from body and continue to pull chest toward right leg. Hold for 10 seconds.
6. Repeat process with the left leg.
7. Repeat process by grasping right toes with right hand and left toes with left hand. Move the torso forward and toward the ground.

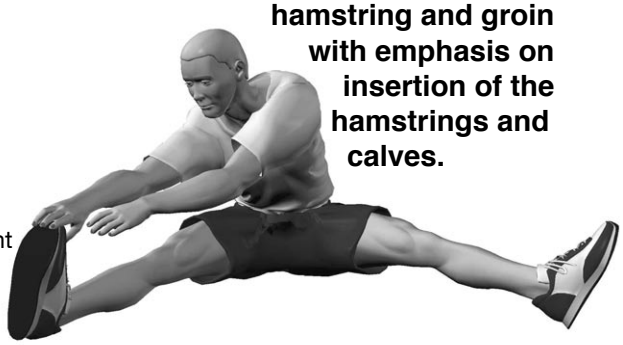

Stretching the hamstring and groin with emphasis on insertion of the hamstrings and calves.



Stretching the hamstring and groin with emphasis on the upper portion.



Stretching the groin, lower back and hamstring.

POSTERIOR OF LOWER LEG

Step Stretch
MUSCLE(S) AFFECTED: ***gastrocnemius and soleus; also, achilles tendon***

1. Have ready a step or board 3 to 4 inches high.
2. Place balls of both feet on the step or board, 1 inch from its edge.
3. With straight legs, lower heels as far as possible.
4. Hold for 10 to 15 seconds.
5. To stretch achilles tendon, raise heels slightly. Slightly flex the knees and then lower the heels. This stretch will be felt in the achilles tendon.
6. Hold for 10 to 15 seconds.
7. For a more intense and individualized stretch, perform this stretch with one leg at a time.



Preparing to stretch the achilles tendon by slightly bending the knee.



Stretching the calves standing on a step.



Stretching the achilles tendon by lowering the heel.

CHEST WORKOUT

Vertical Grip

Chest Press

(Pectorals)



1. Insert pin into weight stack at desired resistance level.
2. Adjust seat pad height so that when seated the vertical press handles bisect the Chest (pectoral) muscles.
3. Seat yourself comfortably on the seat pad with your back straight.
4. Grasp vertical bench handles with your arms bent and palms facing in.
5. Keeping your elbows out and below your shoulders, extend your arms forward at a smooth, moderate pace through out the exercise movement.
6. Pause for a moment, then slowly return to the starting position, repeat.
7. Exhale on exertion, inhale on return motion.

Horizontal Grip

Chest Press

(Pectorals)



1. Insert pin into weight stack at desired resistance level.
2. Adjust seat pad height so that when seated the horizontal press handles bisect the chest (pectoral) muscles.
3. Seat yourself comfortably on the seat pad with your back straight.
4. Grasp horizontal bench handles with your arms bent and palms facing downward.
5. Keeping your elbows out and below your shoulders, extend your arms forward at a smooth, moderate pace throughout the exercise movement.
6. Pause for a moment, then slowly return to the starting position. Repeat movement.
7. Exhale on exertion, inhale on return motion.

Incline Press

(Upper Pectorals)



1. Insert pin into weight stack at desired resistance level.
2. Set press arms and back pad to the Incline Press position.
3. Adjust seat pad height so that when seated the horizontal press handles bisect the upper chest (pectoral) muscles.
4. Sit comfortably on the seat pad with your back flat against the back pad.
5. Grasp horizontal bench handles with your arms bent and palms facing downward.
6. Keeping your elbows out and below your shoulders, extend your arms forward at a smooth, moderate pace throughout the exercise movement.
7. Pause for a moment, then slowly return to the starting position. Repeat movement.
8. Exhale on exertion, inhale on return motion.

High Cable Crossover

(Upper Pectorals)



1. Insert pin into weight stack at desired resistance level.
2. Attach Stirrup Handle (optional) to high pulley cable or middle pulley cable.
3. Stand sideways in front of the machine. Grasp Handle with hand nearest machine, feet shoulder width apart, stand erect. Bend slightly at the waist and maintain this torso angle throughout the exercise movement.
4. Keeping your arm slightly bent, pull Handle downward and across your body in a semicircular arc until hand is approximately 6 inches in front of hip.
5. Pause for a moment, then slowly return the Handle back along the same arc, to the starting position. Repeat movement.
6. Exhale on exertion, inhale on return motion.
7. Turn around and repeat with opposite arm.

CHEST WORKOUT

Lat Pulldown

(Latissimus Dorsi)



1. Insert pin into weight stack at desired resistance level.
2. Attach Lat Bar to high pulley cable.
3. Adjust seat pad so your knees fit comfortably under leg hold-down foam rollers. Sit on seat pad facing into machine.
4. Grasp Lat Bar 3 to 6 inches wider than your shoulders, on each side.
5. Keeping your elbows back during movement, slowly pull the Bar down until it lightly touches the upper part of your chest.
6. Pause for a moment, then slowly return to the starting position. Repeat movement.
7. Exhale on exertion, inhale on return motion.

Seated Row

(Latissimus Dorsi)



1. Insert pin into weight stack at desired resistance level.
2. Adjust seat height so that when seated the Press Arm handles pivot to slightly below your chest area. Adjust chest pad and Press Arm handles to match arm length for full stretch.
3. Sit facing machine. Lock your legs under rollers. Keep chest flat against pad throughout movement.
4. Grasp the handles with both hands allowing the weight to gently stretch your Lats.
5. Using back strength pull the handles toward you being sure to keep your elbows close to your sides. Continue to pull the Bar until it is even with your midsection.
6. Pause for a moment, then slowly return to the starting position. Repeat movement.
7. Exhale on exertion, inhale on return motion.

Shrugs

(Trapezius)



1. Insert pin into weight stack at desired resistance level.
2. Attach Low Row Bar to low pulley cable.
3. Stand facing the low pulley with your feet set shoulder width apart.
4. Grasp the Low Row Bar and stand erect with your arms extended straight down and the Bar resting across your thighs. Allow the weight to pull your shoulders forward and downward.
5. Use Trapezius strength to “shrug” your shoulders upward and backward as far as possible.
6. Pause for a moment, then slowly return to the starting position. Repeat movement.
7. Exhale on exertion, inhale on return motion.

ARMS WORKOUT

Seated Tricep Extension

(Triceps)



1. Insert pin into weight stack at desired resistance level.
2. Attach Tricep Strap to middle pulley cable. Adjust seat pad to a comfortable position.
3. Sit comfortably facing away from the machine. Reach behind your head and secure your hands into the loops of the Tricep Strap.
4. Bend slightly at the waist away from the machine. Keep your arms bent with your elbows facing forward.
5. Keeping your upper arms motionless, use triceps strength to move the Strap forward and outward in an arcing motion until your arms are fully extended.
6. Pause for a moment, then slowly return the Strap back along the same arc, to the starting position. Repeat movement.
7. Exhale on exertion, inhale on return motion.

Tricep Pressdown

(Triceps)



1. Insert pin into weight stack at desired resistance level.
2. Attach Lat Bar or Low Row Bar to high pulley cable.
3. Stand erect with your feet shoulder width. Grasp the Bar with your hands set 3 to 5 inches apart.
4. Pull the Bar down and lock your upper arms against the sides of your torso where they must remain throughout the exercise. Lean slightly forward at the waist.
5. Moving only your forearms, use Triceps strength to press the Bar down in a semicircular arc to a position below your waist.
6. Pause for a moment, then slowly return along the same arc, to the starting position. Repeat movement.
7. Exhale on exertion, inhale on return motion.

Standing Cable Curl

(Biceps)



1. Insert pin into weight stack at desired resistance level.
2. Attach Low Row Bar to low pulley cable.
3. Take an underhand grasp on the Bar. Stand erect with your feet set at shoulder width, approximately 1 to 2 feet away from pulley. Your arms should be down at your sides with the Bar resting on your thighs.
4. Keeping your upper arms locked against the sides of your torso, use Bicep strength to curl the Bar upward and forward in a semicircular arc to a position beneath your chin.
5. Pause for a moment, then slowly return the bar back along the same arc, to the starting position. Repeat movement.
6. Exhale on exertion, inhale on return motion.

Concentration Curl

(Biceps)



1. Insert pin into weight stack at desired resistance level.
2. Attach Stirrup Handle (optional) to low pulley cable.
3. Take an underhand grasp on the Stirrup Handle with your left hand. Stand approximately 1 to 2 feet back from the pulley with your feet at shoulder width. Keep your left upper arm locked against the side of your torso.
4. Use Bicep strength to curl the Handle forward and upward in a semicircular arc to a position under your chin.
5. Pause for a moment, then slowly return the Handle back along the same arc, to the starting position. Repeat movement.
6. Exhale on exertion, inhale on return motion.
7. Change hands and repeat with opposite arm.

SHOULDERS WORKOUT

Deltoid Raise

(Deltiods)



1. Insert pin into weight stack at desired resistance level.
2. Attach Stirrup Handle (optional) to low pulley cable.
3. Take an overhand grasp of the Stirrup Handle (optional) with your palm facing down.
4. Facing away from the machine, stand 1 to 2 feet away from pulley.
5. Using shoulder muscle strength, slowly raise the handle upward and forward in a semicircular arc until it is in a position slightly above your shoulder level.
6. Pause for a moment, then slowly return the Handle along the same arc, back to the starting position. Repeat movement.
7. Exhale on exertion, inhale on return motion.

Upright Row

(Deltiods & Trapezius)



1. Insert pin into weight stack at desired resistance level.
2. Attach the Low Row Bar to low pulley cable.
3. Take an overhand grasp of the Bar with your hands approximately 6 inches apart.
4. Facing the machine, stand 1 to 2 feet away from the pulley with your feet set shoulder width apart. Allow the weight to extend your arms downward with the bar resting across your thighs.
5. Keeping your elbows above your hands at all times, slowly pull the bar upward until the backs of your hands lightly touch your chin.
6. Pause for a moment, then slowly return to the starting position. Repeat movement.
7. Exhale on exertion, inhale on return motion.

ABS WORKOUT

Ab Crunch

(Abdominals)



1. Insert pin into weight stack at desired resistance level and adjust Press Arms to Storage position.
2. Attach Tricep / Ab Strap to the middle pulley cable and adjust the back pad to the flat upright position.
3. Sit comfortably on seat pad. Grasp the Strap and place it securely over your shoulders, keeping your hands planted firmly on your upper chest throughout the entire exercise movement.
4. Using Abdominal muscle strength, slowly bend forward at the waist as far as possible.
5. Pause for a moment, then slowly return back along the same arc, to the starting position, Repeat movement.
6. Exhale on exertion, inhale on return motion.

Oblique Crunch

(Obliques & Abdominals)



1. Insert pin into weight stack at desired resistance level and adjust Press Arms to Storage position.
2. Attach Tricep / Ab Strap to the middle pulley cable and adjust the back pad to the flat upright position.
3. Sit comfortably on seat pad. Grasp the Strap and place it securely over your shoulders, keeping your hands planted firmly on your upper chest throughout the entire exercise movement.
4. Using Abdominal muscle strength, slowly bend forward at the waist and towards one knee.
5. Pause for a moment, then slowly return back along the same arc, to the starting position, Repeat movement.
6. Exhale on exertion, inhale on return motion.

LEG WORKOUT

Standing Leg Curl

(Hamstrings)



1. Insert pin into weight stack at desired resistance level.
2. Stand facing machine and hook your heel under the bottom roller pad with your knee positioned slightly below the top roller pad.
3. Use Hamstring strength to pull and curl your foot upward, bending your knee as much as possible.
4. Pause for a moment, then slowly return along the same arc, to the starting position. Repeat movement.
5. Exhale on exertion, inhale on return motion.
6. Change sides and repeat with opposite leg.

Leg Extension

(Quadriceps)



1. Insert pin into weight stack at desired resistance level.
2. Adjust seat pad height so that when seated the front of your ankles fit under the bottom foam rollers.
3. Sit comfortably on seat pad. Place knees over the top roller pads and hook your feet under the bottom roller pads.
4. Using Quadricep strength, extend your feet out and upward until your legs are fully extended.
5. Pause for a moment, then slowly return your feet back along the same arc, to the starting position, Repeat movement.
6. Exhale on exertion, inhale on return motion.

LEG WORKOUT

Leg Adduction

(Inner Thigh)



1. Insert pin into weight stack at desired resistance level.
2. Attach Ankle Strap to left ankle and low pulley cable. Stand 1 to 2 feet away from the pulley with your left side toward machine.
3. Keeping your legs straight and your body balanced, allow the weight to pull your leg away from your body and toward the machine.
4. Using Inner Thigh strength, slowly pull your left leg across and out from your body as far as possible.
5. Pause for a moment, then slowly return along the same arc, to the starting position. Repeat movement.
6. Exhale on exertion, inhale on return motion.
7. Turn around and repeat with opposite leg.

Leg Abduction

(Outer Thigh)



1. Insert pin into weight stack at desired resistance level.
2. Attach Ankle Strap to right ankle and low pulley cable. Stand 1 to 2 feet away from the pulley with your left side toward machine.
3. Keeping your legs straight and your body balanced, allow the weight to pull your leg across your body and toward the machine.
4. Using Outer Thigh strength, slowly pull your right leg across and out from your body as far as possible.
5. Pause for a moment, then slowly return along the same arc, to the starting position. Repeat movement.
6. Exhale on exertion, inhale on return motion.
7. Turn around and repeat with opposite leg.

Glute Kickback

(Gluteus Maximus)



1. Insert pin into weight stack at desired resistance level.
2. Stand facing machine attach the Ankle Strap to right ankle and low pulley cable. Grasp bench handles for stability.
3. Use Hamstring and Gluteus strength to arc your right foot back and upward, keeping your knee as straight as possible.
4. Pause for a moment, then slowly return along the same arc, to the starting position. Repeat movement.
5. Exhale on exertion, inhale on return motion.
6. Change sides and repeat with opposite leg.

HARDWARE

(Actual Size Shown)

PART# 76 HEX HEAD BOLT 3/8" X 7" PARTIAL THREAD

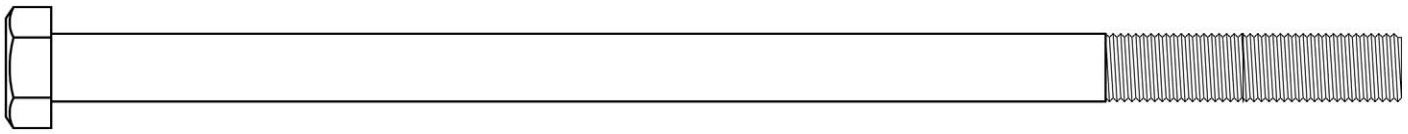

PART# 75 HEX HEAD BOLT 3/8" X 3" PARTIAL THREAD

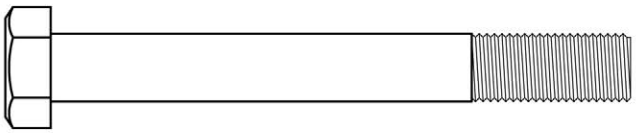

PART# 74 HEX HEAD BOLT 3/8" X 2 3/4" PARTIAL THREAD

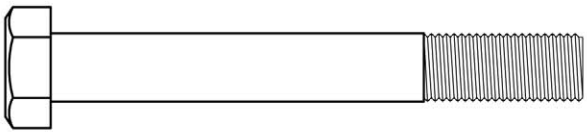

PART# 73 CARRIAGE BOLT 3/8" X 2 1/2" PARTIAL THREAD

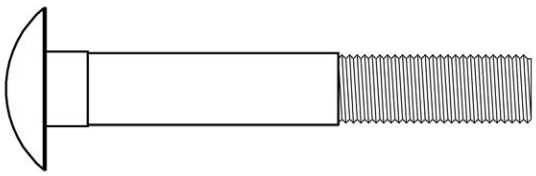

PART# 70 HEX HEAD BOLT 3/8" X 2 1/2" PARTIAL THREAD

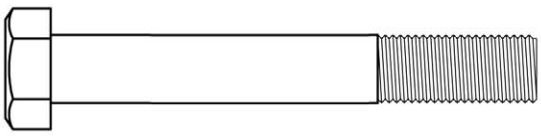

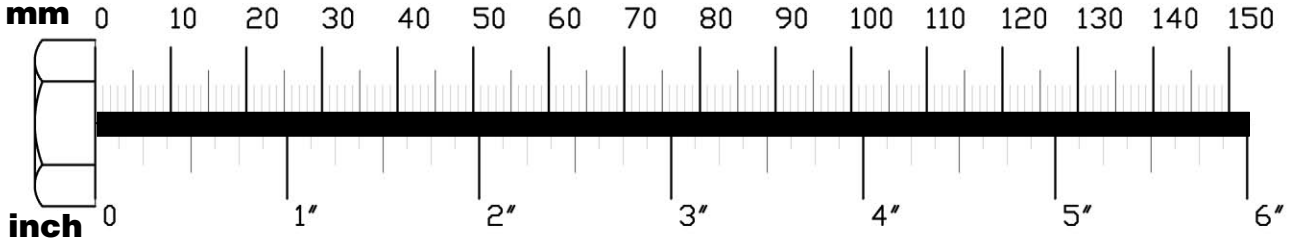

HARDWARE

(Actual Size Shown)

PART# 72 HEX HEAD BOLT 3/8" X1 3/4" PARTIAL THREAD

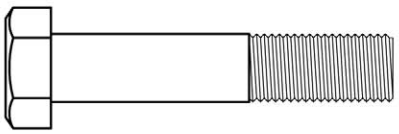

PART# 66 SOCKET HEAD BOLT 3/8" X1 3/4" PARTIAL THREAD

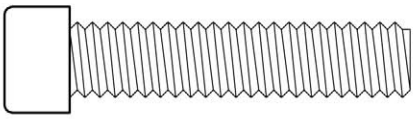

PART# 61 LOCK NUT 1/2"

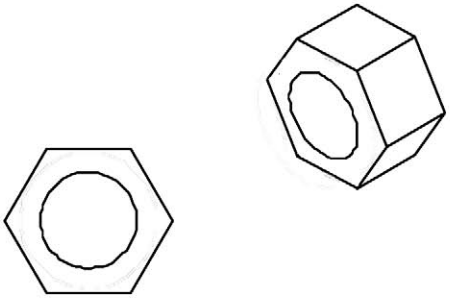

PART# 18 SNAP LINK

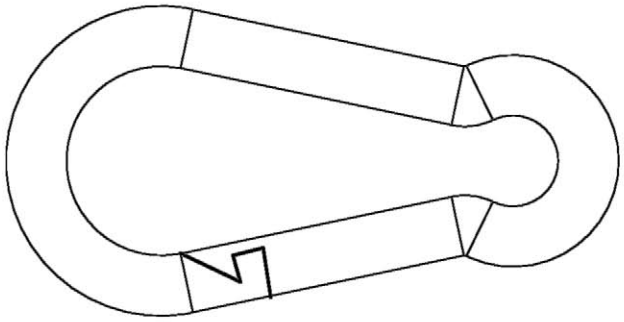

PART# 63 NYLON LOCK NUT 3/8"

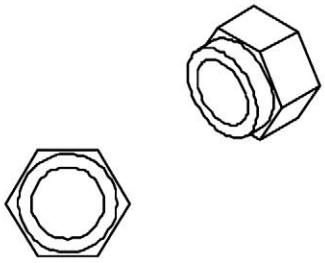

PART# 56 WASHER 3/8"

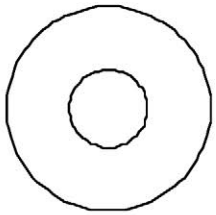

HARDWARE LIST

PART#	QTY	KEY#	DESCRIPTION
A	1	BSGMF-A	MAIN FRAME
B	1	BSGRL-B	REAR LEG
C	1	BSGSF-C	SEAT FRAME
D	1	BSGLEP-D	LEG EXTENSION POST
E	1	BSGFP-E	FLAT PLATE
F	2	BSGGR-F	GUIDE ROD
G	1	BSGPAP-G	PRESS ARM PIVOT
H	1	BSGPAB-H	PRESS ARM BRACKET
I	1	BSGFPB-I	FLOATING PULLEY BRACKET
J	1	BSGRPA-J	RIGHT PRESS ARM
K	1	BSGLPA-K	LEFT PRESS ARM
L	1	BSGLEA-L	LEG EXTENSION ARM
M	1	BSGSPF-M	SEAT PAD FRAME
N	1	BSGBPF-N	BACK PAD FRAME
P	1	BSGBPA-P	BACK PAD ADJUSTMENT
Q	1	BSGB/SP-Q	BACK/SEAT PAD

Part numbers, key numbers, and description are required when ordering parts.

HARDWARE LIST

PART#	QTY	KEY#	DESCRIPTION
1	3	CFRB	FOAM FOLLER BAR
2	1	CSR20	SELECTOR ROD
3	1	CSFT.75X6.5	SHAFT
4	1	CSFT.75X9.75	SHAFT
5	1	CSFT.5X3	SHAFT
6	1	CLB	LAT BAR
7	1	CCES.5X.75	CABLE END SHAFT
8	1	CSRTB	SELECTOR ROD TOP BOLT
9	1	CLRB	LOW ROW BAR
10	2	CTSPP.5X2.5	T-SHAPPED POP PIN
11	1	CRPP.75X3	ROUND POP PIN
12	1	CTSPP	T-SHAPPED POP PIN
13	1	CACH	AB CRUNCH HARNESS
14	2	CLEB	LEG EXTENSION BEARING
15	2	CRR	RETAINING RING
16	2	CPAB	PRESS ARM BEARING
17	1	CSC	STEEL CHAIN
18	4	CSNAP3	SNAP LINK
20	2	CFG6.25	FOAM GRIP
21	2	CFG(long)	FOAM GRIP
22	2	CFG1X5.5	FOAM GRIP
23	4	CFG1.25X5.5	FOAM GRIP
24	2	CRC.5X6.75	RUBBER COVER
25	6	CFR4X8	FOAM ROLLER
26	6	CPW3	PLASTIC WASHER 3”OD
27	6	CPREC2.5	PLASTIC ROLLER END CAP 2 1/2”OD
28	2	CRD2.5	RUBBER DONUT 2 1/2”
29	1	CWSP	WEIGHT STACK PIN
30	1	CLAN	LANYARD
31	1	CRP1.5	RUBBER PAD 1 1/2” X 1 1/2”
32	10	CPP4.25	PULLEY 4 1/4”OD
33	4	CPP3	PULLEY 3”OD
34	4	CPB	PLASTIC BUSHING
35	3	CFC2X2	FOOT CAPS 2” X 2”
36	2	CEC1.75	END CAP 1 3/4” X 2 3/4”
37	6	CEC2X1	END CAP 2” X 1”
38	8	CEC2X2	END CAP 2” X 2”
40	4	CEC1.25	END CAP 1 1/4”
41	2	CEC	END CAP
42	2	CFL	FRAME LEVELER
43	2	CRS1.5X1.25	RUBBER STOP 1 1/2” X 1 1/4”
44	2	CSC1.37X.75	SHAFT COLLAR 1 3/8” X 1 1/2”L
45	1	CTP10	TOP PLATE 10lbs.
46	15/20	CSB10	WEIGHT PLATES 10lbs.
47	1		FOAM ROLLER CUSHION

Part numbers, key numbers, and description are required when ordering parts.

HARDWARE LIST

PART#	QTY	KEY#	DESCRIPTION
50	2	CBB.5X.75	BRONZE BUSHING 1/2” X 3/4”
51	2	CSB	STEEL BUSHING
52	12	CPS	PULLEY SPACER
53	4	CPS	PULLEY SPACER
54	2	CWFLT.31	WASHER 5/16”
55	4	CWFLT.31	WASHER 5/16”
56	38	CWFLT.37	WASHER 3/8”
57	2	CSLW.5	SPRING LOCK WASHER 1/2”
58	4	CSLW.31	SPRING LOCK WASHER 5/16”
59	1	CSLW.5	SPRING LOCK WASHER 1/2”
60	1	CSLW.37	SPRING LOCK WASHER 3/8”
61	1	CJN.5	JAM NUT 1/2”
62	2	CJN.37	JAM NUT 3/8”
63	26	CNLN.37	NYLON LOCK NUT 3/8”
64	1	CAS.31X.37	ALLEN SCREW 5/16” X 3/8”
65	2	CSHB.25x.37	SOCKET HEAD BOLT 1/4” x 3/8”
66	1	CSHB.37X1.75	SOCKET HEAD BOLT 3/8” x 1 3/4”
67	8	CAS.31X.37	ALLEN SCREW 5/16” x 3/8”
68	1	CHES.37X.75	HEX HEAD BOLT 3/8” x 3/4”
69	2	CRAB.31	ROUND ALLEN BOLT 5/16” X 5/8”
70	8	CHEX.37X2.5PTB	HEX HEAD BOLT 3/8” X 2 1/2” PARTIAL THREAD
71	4	CHEX.31X2.25PTB	HEX HEAD BOLT 5/16” X 2 1/4” PARTIAL THREAD
72	6	CHEX.37X1.75PTB	HEX HEAD BOLT 3/8” X 1 3/4” PARTIAL THREAD
73	2	CHEX.37X2.5PTB	CARRIAGE BOLT 3/8” X 2 1/2” PARTIAL THREAD
74	1	CHEX.37X2.75PTB	HEX HEAD BOLT 3/8” X 2 3/4” PARTIAL THREAD
75	6	CHEX.37X3PTB	HEX HEAD BOLT 3/8” X 3” PARTIAL THREAD
76	2	CHEX.37X7PTB	HEX HEAD BOLT 3/8” X 7” PARTIAL THREAD
77	1	CSHB.5X5.5PTB	HEX HEAD BOLT 1/2” X 5 1/2” PARTIAL THREAD
78	1	CNLN.37	NYLON LOCK NUT 3/8”
79	1	CFLT.37	WASHER 3/8”

Part numbers, key numbers, and description are required when ordering parts.

REFERENCE DRAWINGS

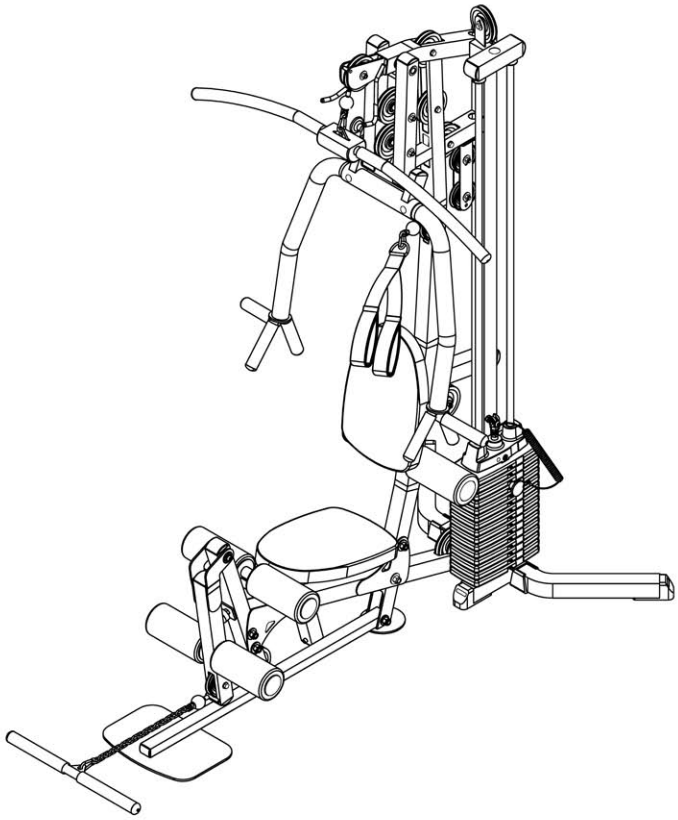

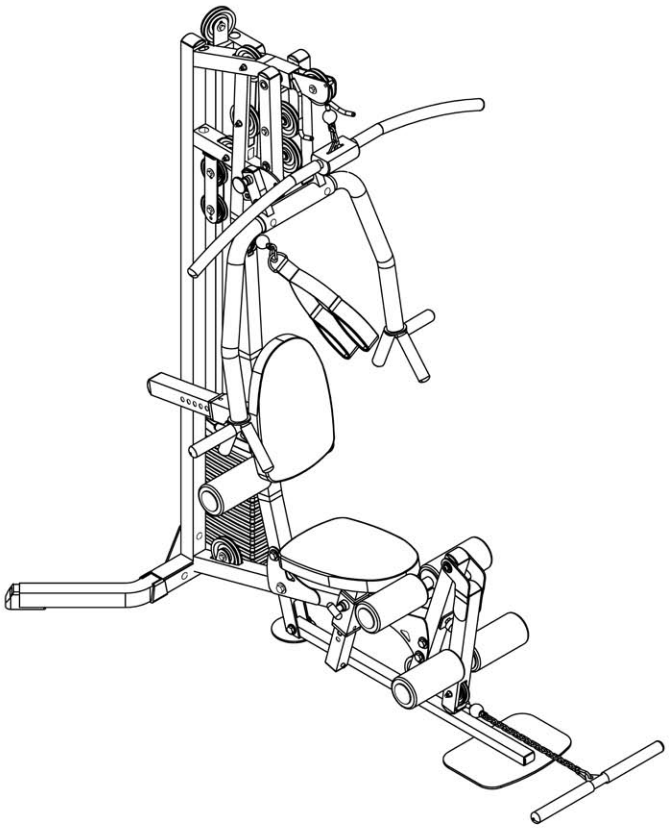

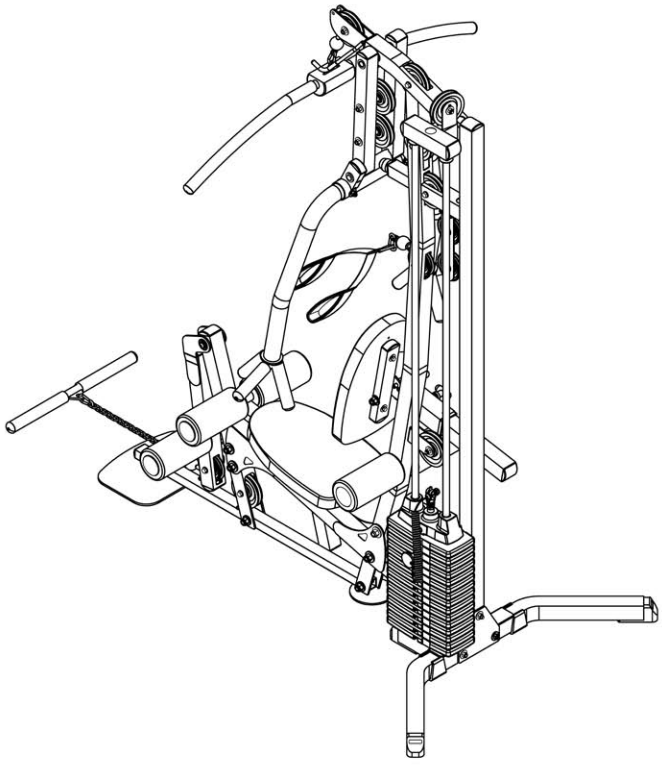

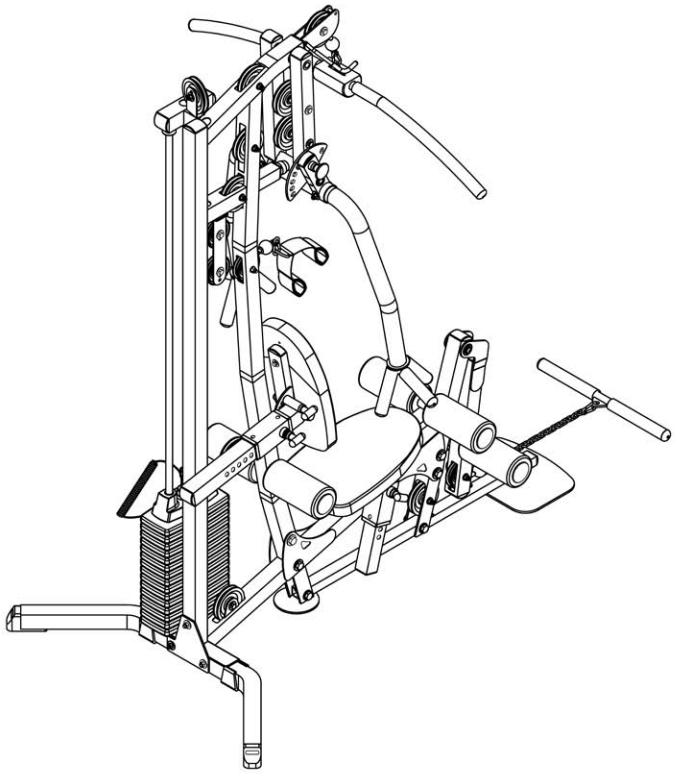



EXPLODED VIEW DIAGRAM

1900 S. Des Plaines Ave.
Forest Park, Il 60130
1 (800) 556-3113
Hours: M-F 8:30 - 5:00 CST

POWERLINE®

© Copyright 2003. Body-Solid. All rights reserved. Body-Solid reserves the right to change design and specifications when we feel it will improve the product.