BLACK+DECKER®





HVLP200

www.blackanddecker.eu

EU: Stanley Black & Decker Deutschland GmbH | Richard-Klinger-Straße 11 65510, Idstein, Germany
UK: Stanley Black & Decker UK Limited | Meadowfield Avenue, Spennymoor, DL16 6YJ, England

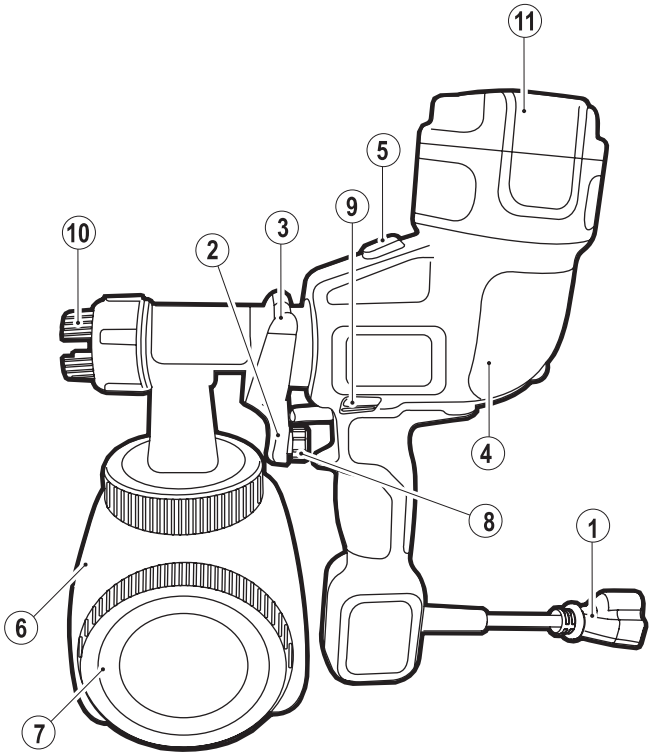
11
5
9
10
2
3
4
8
1
6
7

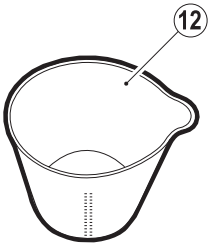
12


13

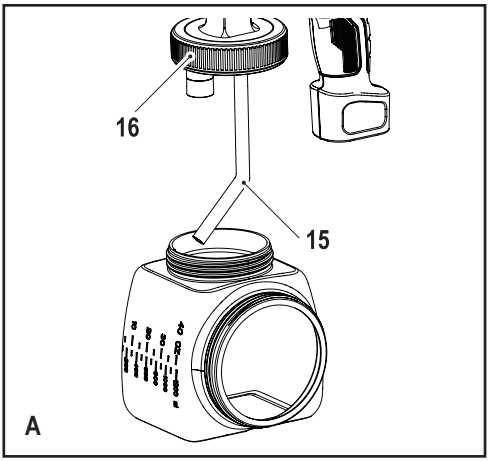
16
15
A

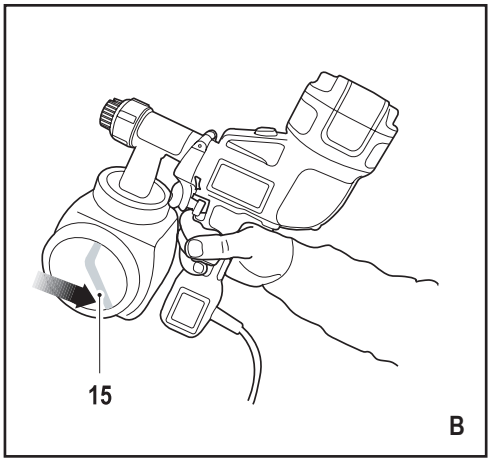
15
B

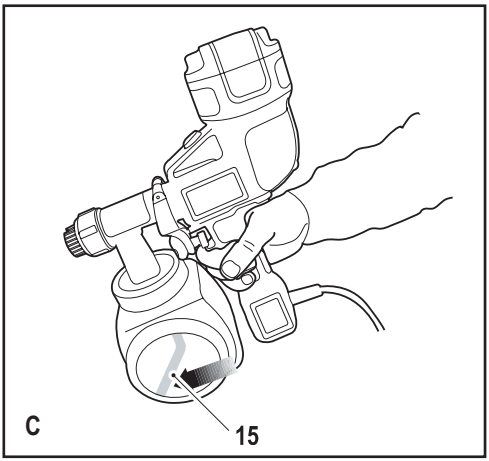
C
15

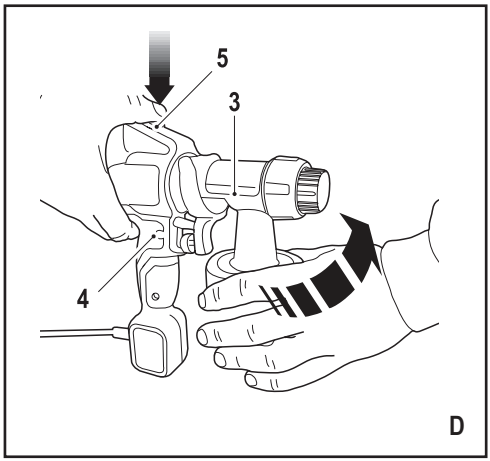
5
3
4
D

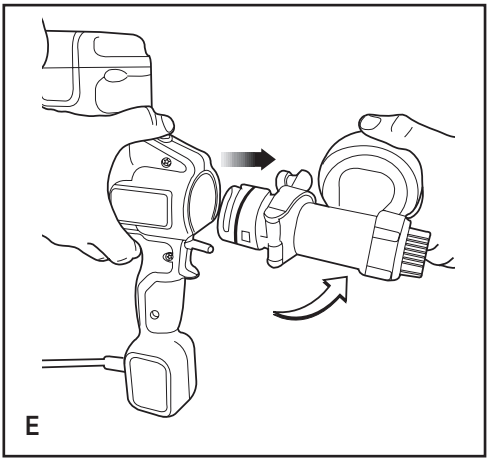
E

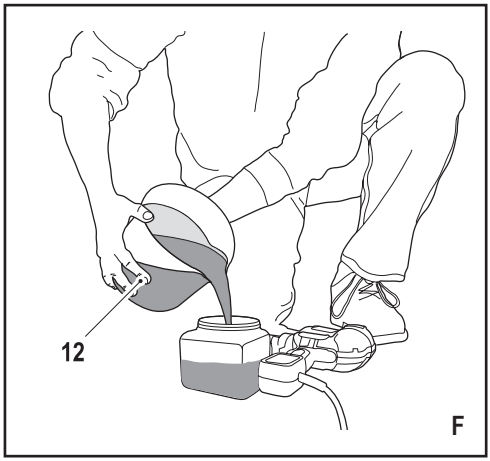
12
F

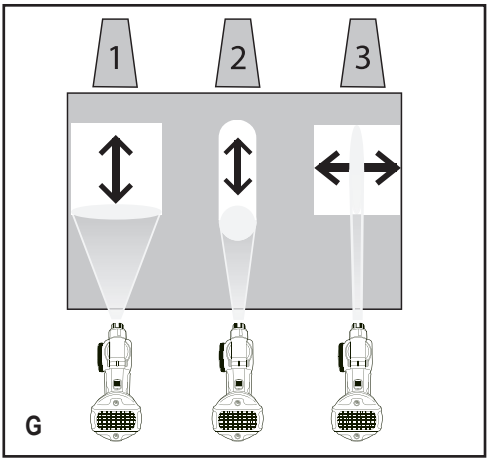
1
2
3
G

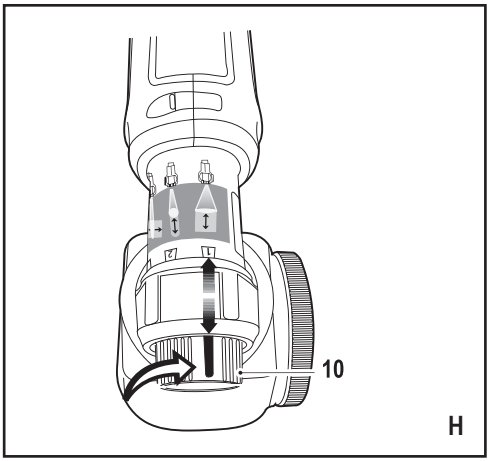
10
H

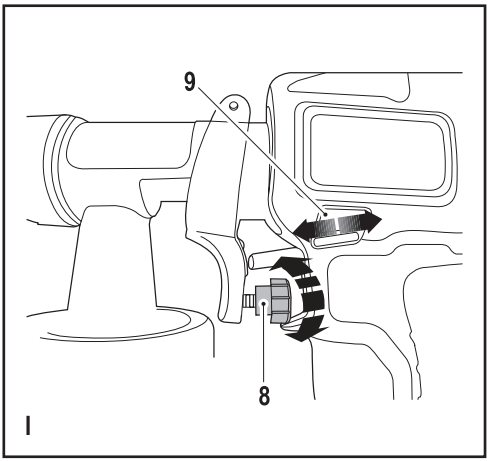
9
8
I

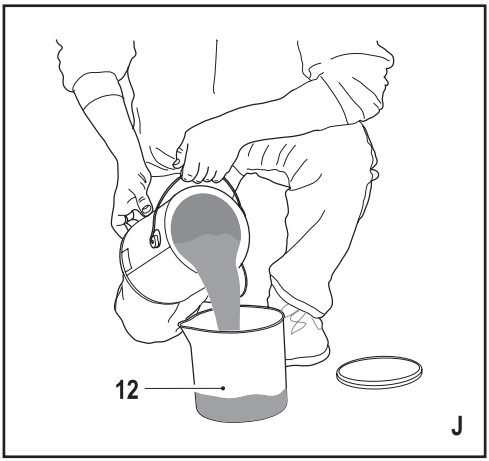
12
J

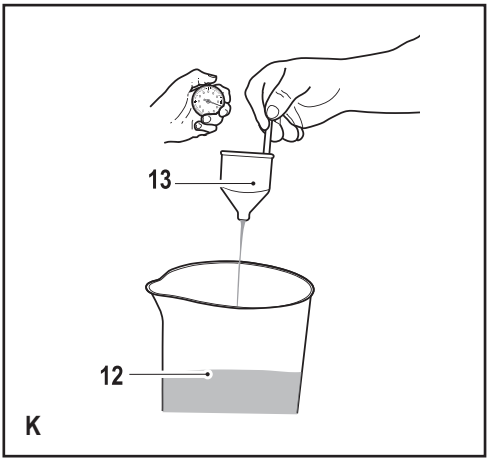
13
12
K

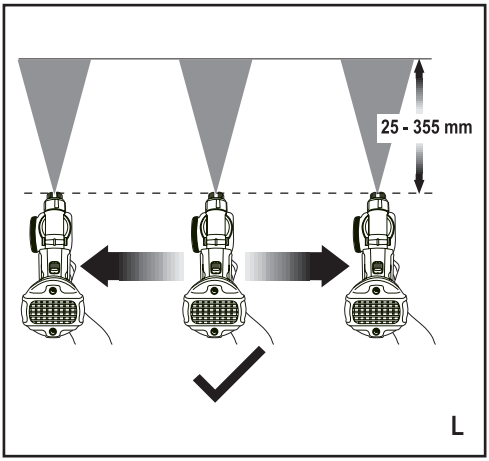
25 - 355 mm
L

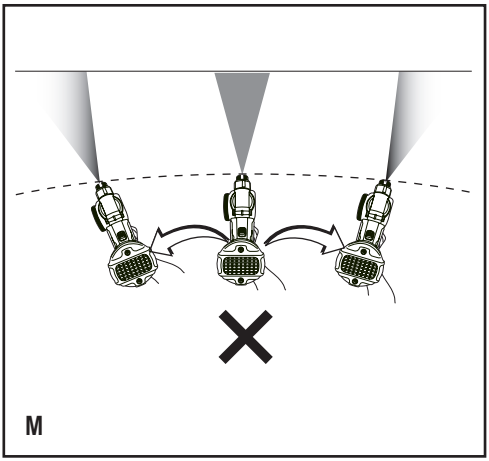

M

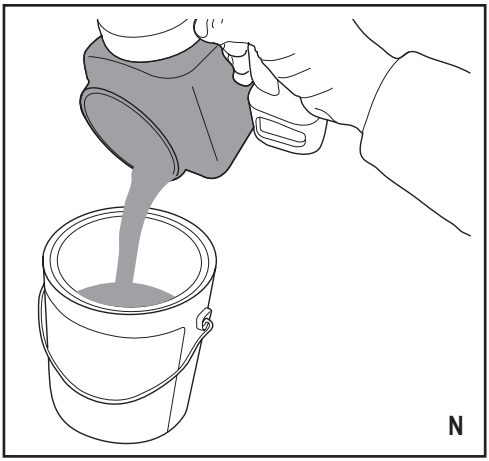

N

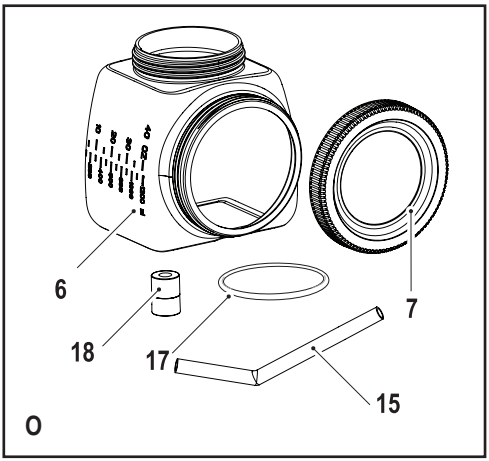

O

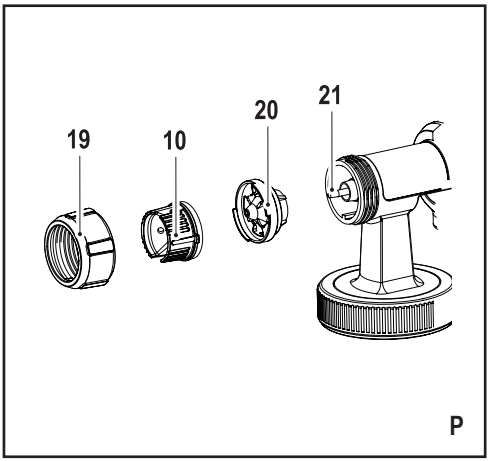

P

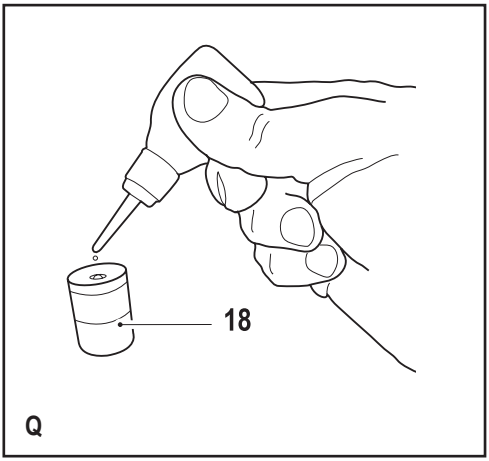

Q

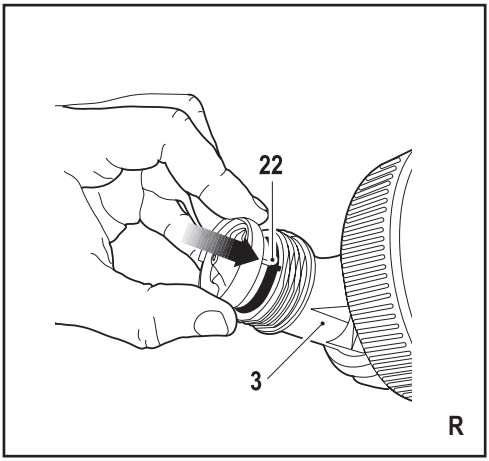

R

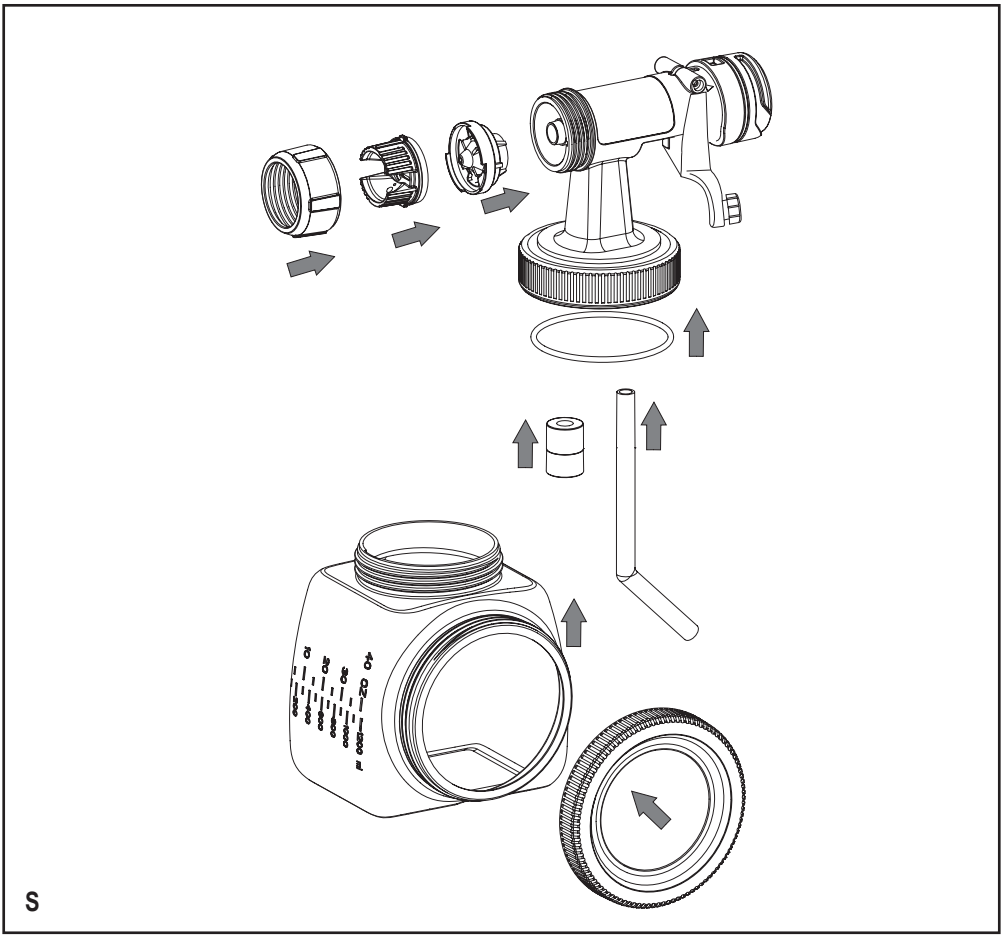

S

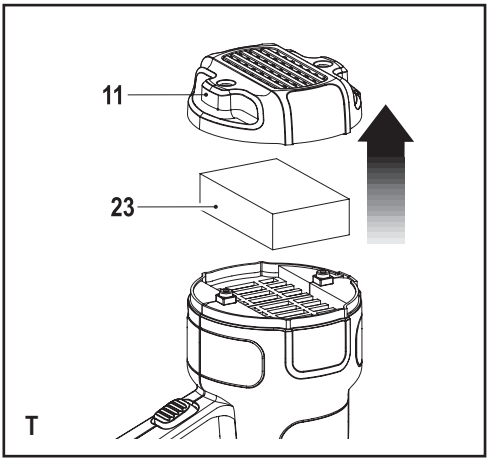

T

Documents Available Online

www.2helpU.com/DoC/ or www.2helpU.com/DoC/index/xxx*

*For direct access, replace "xxx" with the product's model number given on the product rating label or packaging.

- Instruction Manual
- Declaration of Conformity (DoC)
- Product Emission Data (PED): Information about Noise, Vibration and Dust (not applicable for all products)

Intended use

Your Black & Decker floor based fine spray system is intended for atomising solvent based and water based paints, finishes, primers, clear finishes, automotive finishes, staining sealers, wood sealer-preservatives. The power tool is not suitable for spraying caustic solutions, acidic coating materials, coating materials with granules or solids as well as spray and drip-impeding materials.. This appliance is intended for consumer use only.

Safety instructions

General power tool safety warnings

Warning! Read all safety warnings and all instructions. Failure to follow the warnings and instructions listed below may result in electric shock, fire and/or serious injury.

Save all warnings and instructions for future reference. The term "power tool" in all of the warnings listed below refers to your mains operated (corded) power tool or battery operated (cordless) power tool.

1. Work area safety

a. Keep work area clean and well lit. Cluttered or dark areas invite accidents.

b. Do not operate power tools in explosive atmospheres, such as in the presence of flammable liquids, gases or dust. Power tools create sparks which may ignite the dust or fumes.

c. Keep children and bystanders away while operating a power tool. Distractions can cause you to lose control.

2. Electrical safety

a. Power tool plugs must match the outlet. Never modify the plug in any way. Do not use any adapter plugs with earthed (grounded) power tools. Unmodified plugs and matching outlets will reduce risk of electric shock.

b. Avoid body contact with earthed or grounded surfaces such as pipes, radiators, ranges and refrigerators. There is an increased risk of electric shock if your body is earthed or grounded.

c. Do not expose power tools to rain or wet conditions. Water entering a power tool will increase the risk of electric shock.

d. Do not abuse the cord. Never use the cord for carrying, pulling or unplugging the power tool. Keep cord away from heat, oil, sharp edges or moving parts. Damaged or entangled cords increase the risk of electric shock.

e. When operating a power tool outdoors, use an extension cord suitable for outdoor use. Use of a cord suitable for outdoor use reduces the risk of electric shock.

f. If operating a power tool in a damp location is unavoidable, use a residual current device (RCD) protected supply. Use of an RCD reduces the risk of electric shock.

3. Personal safety

a. Stay alert, watch what you are doing and use common sense when operating a power tool. Do not use a power tool while you are tired or under the influence of drugs, alcohol or medication. A moment of inattention while operating power tools may result in serious personal injury.

b. Use personal protective equipment. Always wear eye protection. Protective equipment such as dust mask, non-skid safety shoes, hard hat, or hearing protection used for appropriate conditions will reduce personal injuries.

c. Prevent unintentional starting. Ensure the switch is in the off-position before connecting to power source and/or battery pack, picking up or carrying the tool. Carrying power tools with your finger on the switch or energising power tools that have the switch on invites accidents.

d. Remove any adjusting key or wrench before turning the power tool on. A wrench or a key left attached to a rotating part of the power tool may result in personal injury.

e. Do not overreach. Keep proper footing and balance at all times. This enables better control of the power tool in unexpected situations.

f. Dress properly. Do not wear loose clothing or jewellery. Keep your hair, clothing and gloves away from moving parts. Loose clothes, jewellery or long hair can be caught in moving parts.

g. If devices are provided for the connection of dust extraction and collection facilities, ensure these are connected and properly used. Use of dust collection can reduce dust-related hazards.

4. Power tool use and care

a. Do not force the power tool. Use the correct power tool for your application. The correct power tool will do the job better and safer at the rate for which it was designed.

b. Do not use the power tool if the switch does not turn it on and off. Any power tool that cannot be controlled with the switch is dangerous and must be repaired.

c. Disconnect the plug from the power source and/or the battery pack from the power tool before making any adjustments, changing accessories, or storing power tools. Such preventive safety measures reduce the risk of starting the power tool accidentally.

d. Store idle power tools out of the reach of children and do not allow persons unfamiliar with the power tool or these instructions to operate the power tool. Power tools are dangerous in the hands of untrained users.

e. Maintain power tools. Check for misalignment or binding of moving parts, breakage of parts and any other condition that may affect the power tools operation. If damaged, have the power tool repaired before use. Many accidents are caused by poorly maintained power tools.

f. Keep cutting tools sharp and clean. Properly maintained cutting tools with sharp cutting edges are less likely to bind and are easier to control.

g. Use the power tool, accessories and tool bits etc. in accordance with these instructions, taking into account the working conditions and the work to be performed. Use of the power tool for operations different from those intended could result in a hazardous situation.

5. Service

a. Have your power tool serviced by a qualified repair person using only identical replacement parts. This will ensure that the safety of the power tool is maintained.

Additional safety instructions

Warning!

- Read all instructions and safety precautions for equipment and spray material before operation any equipment.
- Comply with all appropriate local, state and national codes governing ventilation, fire prevention and operation.
- Keep sprayer out of reach of children.
- Hearing protection is recommended for extended use.
- Use eye protection to keep particles out of eyes.

Hazardous vapours

Insecticides and other materials may be harmful if inhaled causing severe nausea, fainting or poisoning.

a. Use a respirator or mask whenever there is a chance that vapours may be inhaled. Read all instructions with the spray material and mask to ensure that it will provide the necessary protection against the inhalation of harmful vapours.

Additional safety instructions for paint sprayers

Warning!

- Before any use, be sure anyone using this sprayer reads and understands all safety instructions and other information contained in this manual.
- Do not use caustic (alkali) self heating or corrosive (acid) liquids in this sprayer as these can corrode metal parts or weaken hose and seals.
- Do not use hot or boiling liquids in sprayer as this may weaken tank and hose.
- Do not leave residue or spray material in the tank after using sprayer.
- Do not smoke while spraying or spray where spark of flame is present.
- Do thoroughly inspect both inside and outside of sprayer before each use.
- Do empty, clean and drain both tank and hose after each use according to directions.
- Do not use guns for spraying flammable materials.
- Do not spray any material where the hazard is not known.
- Use only non-flammable liquids.
- Do not clean guns with flammable materials.

Personal safety

a. Additional personal safety equipment such as appropriate gloves and a respirator or mask must be used when handling chemicals. Safety equipment used for appropriate conditions will reduce personal injuries.

b. Do not spray yourself, any person or animal. Keep hands and other body parts away from the discharge. In case of skin injection, seek medical attention immediately. The sprayed material may pierce the skin and be injected to your body.

c. Do not treat injection as a simple cut. Spray is able to inject toxins into the body and cause serious bodily injury. In the event that injection occurs, seek medical attention immediately.

d. Beware of any hazards presented by the material being sprayed. Consult the markings on the container or the information supplied by the manufacturer of the material to be sprayed, including requirements for the use of personal protective equipment. Manufacturer's instructions must be followed to reduce the risk of fire and personal injury, derived from toxins, carcinogens, etc.

Safety of others

- This appliance is not intended for use by persons (including children) with reduced physical, sensory or mental capabilities, or lack of experience and knowledge, unless they have been given supervision or instruction concerning the use of the appliance by a person responsible for their safety.

- Children should be supervised to ensure that they do not play with the appliance.

Residual risks.

Additional residual risks may arise when using the tool which may not be included in the enclosed safety warnings. These risks can arise from misuse, prolonged use etc.
Even with the application of the relevant safety regulations and the implementation of safety devices, certain residual risks can not be avoided. These include:

- Injuries caused by touching any moving parts.
- Injuries caused by touching any hot parts.
- Injuries caused when changing any parts or accessories.
- Injuries caused by prolonged use of the appliance. When using any appliance for prolonged periods ensure you take regular breaks.

Labels on the appliance

The following pictograms are shown on the tool:



Warning! To reduce the risk of injury, the user must read the instruction manual.



Warning! Do not expose the appliance to rain or high humidity.



Warning! Keep bystanders away.



Warning! Wear safety glasses or goggles when operating this tool.



Warning! Wear a respirator or mask.



Warning! Use only non-flammable liquids.

Electrical safety



This tool is double insulated; therefore no earth wire is required. Always check that the power supply corresponds to the voltage on the rating plate.

- If the supply cord is damaged, it must be replaced by the manufacturer or an authorised Black & Decker Service Centre in order to avoid a hazard.
- When using the tool outdoors, only use extension cables intended for outdoor use. A suitable rated Black & Decker extension cable of up to 30 m can be used without loss of power.
- Electric safety can be further improved by using a high-sensitivity 30 mA residual current device (RCD).

Features

This appliance includes some or all of the following features.

1. Plug and power cord
2. Spray trigger
3. Sprayer
4. Power unit
5. Sprayer release button
6. Side fill canister
7. Lid
8. Flow control knob
9. Flow indicator
10. Pattern select nozzle
11. Filter cover
12. Mixing bucket
13. Viscosity cup

Assembly

Warning! Before assembly, make sure that the tool is switched off and unplugged.

Attaching the side fill canister (fig. A)

The side fill canister is designed so it will only fit one way round.

- Align the side fill canister (6) below the pick up tube (15) with the lid (7) to the left.
- Push the side fill canister (6) firmly into place.
- Tighten the locking ring (16) by turning it clockwise.

Note: Ensure that the locking ring is tight and that the side fill canister is firmly secured in place.

Aligning the pickup tube (fig. B & C)

The pickup tube can be aligned in the direction that you will be doing the most spraying to help minimize the amount of times that you will have to refill the canister.

- If you are spraying at an upward angle or straight on, position the pickup tube (fig. B) toward the back of the canister.
- If you are spraying at a downward angle, position the pickup tube (fig. C) toward the front of the canister.

This will ensure you spray as much material as possible before you need to refill.

Removing and attaching the sprayer (fig. D & E)

Removing the sprayer from the motor unit

- Press and hold the sprayer release button (5).
- Twist the sprayer (3) untill it is at 90° to the motor unit (4).
- Pull the sprayer (3) straight out from the motor unit (4).
- Release the sprayer release button (5).

Attaching the sprayer to the motor unit

- Press and hold the sprayer release button (5).
- Hold the sprayer (3) at 90° to the motor unit (4).
- Push the sprayer (3) straight in to the motor unit (4).
- Twist the sprayer (3) through 90° untill it is level with the motor unit (4).
- Release the sprayer release button (5).

Warning! Ensure that the sprayer is firmly attached to the motor unit before performing any spray operations.

Filling the canister (fig. F)

- Check to make sure that the side fill canister (6) is completely screwed onto the sprayer.
- Lay the sprayer on its side with the canister side lid facing up.
- Pour the properly thinned and strained material to be sprayed into the side fill canister.

Note : Use the mixing bucket provided to pour material from the original material container into the side fill canister.

- Clean any residual liquid from the threads or sides of the canister and sprayer.
- Starting the threads evenly, screw the lid completely onto the side fill canister. Check the lid to make sure it is threaded on squarely and completely before picking up the sprayer.

Use

Switching on and off

The sprayer is turned on and off with the spray trigger.

- To turn the sprayer on, squeeze the spray trigger (2).
- To turn the sprayer off, release the spray trigger (2).

Warning! Never point the sprayer at any part of the body. Never pull the trigger while adjusting the spray setting.

Selecting the spray pattern (fig. G & H)

This sprayer is fitted with a pattern select nozzle (10) which is capable of 3 spray patterns. This is used to select the correct spray pattern for your particular spraying operation.
Using the pattern select nozzle (10), choose from one of the following applications:

	Horizontal Flat Jet - Apply up and down a surface.
	Circular Jet - for corners, edges and narrow surfaces.
	Vertical Flat Jet. Apply side to side.

There are three spray patterns to choose from. They are marked as 1, 2 and 3 on the pattern select label located on the top of the sprayer (fig. G)

- To select the required spray pattern, turn the pattern select nozzle (10) and align the green indicator on the pattern select nozzle (10) with the number on the label (fig. H)

Warning! Never point the sprayer at any part of the body. Never pull the trigger while adjusting the spray setting.

Flow control knob (fig. I)

The flow control knob regulates the amount of liquid that can be sprayed.

- Turn the flow control knob (8) clockwise to increase the flow of liquid
- Turn the flow control knob (8) counterclockwise to decrease the flow of liquid.
- The flow indicator (9) on the side of the sprayer moves forward (minimal liquid flow) and backward (maximum liquid flow) as the flow control knob (8) is turned.

Note : Always test the spray pattern on scrap cardboard or similar material first. Begin with flow control knob on the highest flow setting. If less flow is desired, dial the flow control knob in. Heavier, thicker materials should be sprayed with the indicator close to the (+) icon. Thinner materials should be sprayed with the indicator close to the (-) icon.
Note : If the flow control setting is set completely to the minimum side, the trigger will have limited or no travel. Back the flow control knob off (clockwise) to allow for more trigger travel.

Liquid material preparation (fig. J & K)

Note : Make sure the type of material you use can be cleaned with either mineral spirits or paint thinner (for oil-based paints) or a warm water and soap solution (for water soluble paints like latex). Use drop cloths to protect your floors and anything else in the spraying area that you wish to remain untouched. The liquid being sprayed may need to be thinned (diluted) before staring. When thinning, use the proper liquid thinner recommended on the container by the material manufacturer.
Warning! Do not use materials with a flashpoint lower than 55°C.
Note : A mixing bucket (12) is provided to use when transferring spray material from the original container into the bucket for thinning and measuring purposes (fig. J).
Note : A viscosity cup (13) is provided to determine the “runout time” of the material being used.

- Before measuring for the proper viscosity, stir the material thoroughly.
- Dip the viscosity cup (13) into the material being sprayed and fill the viscosity cup (13) completely.
- With the viscosity cup (13) held over the material container, measure the amount of time it takes for the stream of material flowing out to “break” or stop being

a constant stream out of the bottom of the viscosity cup (13) (2 minutes or less) (fig. K). This is the “run out time” Refer to the thinning table for information on the thinning required for different materials.

- If material needs thinning, add the appropriate liquid thinning material recommended by the manufacturer.
- It is possible to spray latex paint with this unit, however, the required thinning may exceed material manufacturer's recommendation. Thin latex paint so that it runs through viscosity cup (13) in under 2 minutes. The operator should consider the type of application and final location of the project when spraying a material that requires more than 2 minutes to run through the viscosity cup (13).

Thinning table

Spray material	Runout time
Clear and semi-transparent stains and sealers	No thinning required
Oil based primers, varnishes and polyurethane	(Less than 2 minute runout)
Solid colour water based stains	May require thinning
Water based or latex paints	(More than 2 minute runout)

Note : Not recommended for textured paint

Hints for optimum use

Preparation tips

- Always stir and strain the material thoroughly before use.
- With any spraying job you should always ensure that you have properly prepared the surface to get the best finish. That is, all surfaces are free from dust, dirt, rust and grease. Lightly pressure wash decks or exterior surfaces and ensure that they are dry before spraying.
- Even though HVLP sprayers have very little over spray, it is recommended that you mask all edges and other areas and use drop cloths to protect your floors and anything else in the spraying area that you wish to remain untouched.
- Skin that forms on the top of paint can clog the sprayer. Remove skin before mixing. Strain with a funnel with a filter attached or through hosiery to remove any impurities that could clog system.
- Before starting have gloves, paper towels, rags etc. available for unexpected spills.

Developing the proper spraying technique (fig. L & M)

- Practice spraying on a piece of scrap material such as cardboard to test your spray pattern and become familiar with the flow control feature of the sprayer.
- Ensure surface to be sprayed is free of dust, dirt, and grease.
- Ensure spray area is clean and free of dust that could be blown onto newly sprayed surfaces.
- Cover any areas not intended to be sprayed.
- Always spray from a minimum of 25mm to a maximum of 355mm (fig. L).
- A commonly used method for spraying a large surface is the “crisscross” pattern. This is done by spraying in horizontal strips and then crossing over these strips with vertical strips.
- To get an even spray distribution, always keep your arm at the same distance (fig. L) from the surface you are spraying and avoid moving your wrist (fig. M).
- Maintain smooth and consistent speed which will help avoid inconsistencies. Begin spraying after the pass has begun and release trigger before stopping the pass.
- Avoid spraying too heavily in any one area. Several lighter coats are better than one heavy coat which can lead to running and dripping. Remember that the flow control knob regulates the amount of liquid that can be sprayed. Turning the flow knob clockwise increases the flow of liquid. Turning the knob counterclockwise decreases the flow of liquid. If runs or drips do occur, have a dry paint brush on hand to smooth them out.
- Turn the power unit off and place the sprayer in the built-in dock of the power unit when not spraying for any length of time.

Maintenance and cleaning

Your Black & Decker corded appliance has been designed to operate over a long period of time with a minimum of maintenance. Continuous satisfactory operation depends upon proper appliance care and regular cleaning.

Warning! Be sure to use appropriate personal protective equipment.

Warning! Before performing any maintenance or cleaning on corded appliances switch off and unplug the appliance.

Warning! Do not use materials with a flashpoint lower than 55°C. Flashpoint is the temperature that a fluid can produce enough vapours to ignite (see paint supplier instructions).

Warning! Make sure clean up area is well ventilated and free of flammable vapours.

Warning! Always spray outdoors when spraying cleaning solution through sprayer.

Warning! Do not submerse power unit.

Flushing the sprayer (fig. N)

- Disconnect the sprayer from the power supply.
- Unscrew the lid from the side of the canister and pour any remaining liquid back into the original container (fig. N).
- Pour a small amount of the appropriate cleaning solution into the canister.
  - Warm soapy water for water based materials.
  - Manufacturers recommended cleaning solution for oil based materials.

- Replace the lid on the canister securely and vigorously shake the sprayer.
- Unscrew the lid from the side of the canister and properly dispose of cleaning solution.
- Refill the canister with a small amount of new cleaning solution. Screw lid securely on canister.
- Reattach the sprayer to the motor unit, plug in the cord and turn on the power unit.
- Spray the cleaning solution through the sprayer onto scrap material for 2 to 3 seconds.

Cleaning the sprayer (fig. O - S)

- Disconnect the sprayer from the power supply.
- Remove the side fill canister (6) and unscrew the side lid (7). Remove the check valve (18), pickup tube (15) and o-ring (17) from the sprayer. Clean the parts in the appropriate cleaning solution (fig. O).
- Unscrew the tip collar (19) and remove the spray nozzle (10) and spray tip (20). Clean all parts in the appropriate cleaning solution (fig. P).
- If using water based material, clean the sprayer by running water through pickup tube inlet. If using oil based materials, clean pickup tube inlet with the appropriate cleaning solution. Repeat until sprayer is completely clean. Take special care to gently clean the spraying needle (21).
- Dry all parts thoroughly.
- Properly dispose of cleaning solution.
- Place a drop of household oil onto the metal ball in the check valve (18) (fig. Q).

Important : Lubricating the ball in check valve (18), after cleanup, will help to prevent it from sticking which can clog the valve and prevent adequate flow of spray material.

Note : When reassembling, place metal ball end of check valve (18) into sprayer.

- Reassemble sprayer (fig. S).

Note : The spray tip (20) can only go in one way. The notch (22) on the spray tip must align with the recess in the threads of the sprayer (fig. R).

Cleaning the power unit

- Disconnect the sprayer from the power supply.
- Use only mild soap and damp cloth to clean the power unit.

Warning! Never let any liquid get inside the power unit.
Warning! Never immerse any part of the power unit into a liquid.

Cleaning the filter

The power unit contains a washable/reusable filter (fig. T). Check the filter before and after each use. If dirty, wash with warm water and allow to air dry before re-installing or replace if necessary.

- To check the filter, remove the filter cover (11) by removing the 2 screws from the top of the filter cover then pulling the cover off the power unit.
- Remove the filter (23) and inspect.
- Replace the filter and filter cover.

Warning! Never operate the power unit without the filter in place. Debris could be sucked in and interfere with the function of the power unit.

Mains plug replacement (U.K. & Ireland only)

If a new mains plug needs to be fitted:

- Safely dispose of the old plug.
- Connect the brown lead to the live terminal in the new plug.
- Connect the blue lead to the neutral terminal.
- Connect the green/yellow lead to the earth terminal.

Warning! Follow the fitting instructions supplied with good quality plugs. Recommended fuse: 13A.

Protecting the Environment



Products/batteries are recyclable, but if marked with the crossed-out bin, they must not be disposed of with normal household waste.

Run the batteries down completely and separate them, and separate any light sources from the product if possible. It is the user's responsibility to delete personal data from the product. Then take the waste to an official waste collection centre or a participating retailer who will often accept it free of charge. Packaging should be discarded based on the marked material code. Operating and safety instructions should only be discarded once the applicable product is no longer in use.

Please check with your local community/municipality for waste management guidance. For further information, visit **www.2helpU.com** and scan the above QR code.

Technical data

		HVLP200 (Type 1)
Voltage	V_{ac}	230
Power	W	400
Tank capacity	l	1.2
Weight	kg	1.49

Guarantee

Black & Decker is confident of the quality of its products and offers consumers a 24-month guarantee from the date of purchase. This guarantee is in addition to and in no way prejudices your statutory rights. The guarantee is valid within the territories of the Member States of the European Union and the European Free Trade Area.

To claim on the guarantee, the claim must be in accordance with Black & Decker Terms and Conditions and you will need to submit proof of purchase to the seller or an authorised repair agent.

Terms and conditions of the Black & Decker 2-year guarantee and the location of your nearest authorised repair agent can be obtained on the Internet at **www.2helpU.com,** or by contacting your local Black & Decker office at the address indicated in this manual.

Please visit our website **www.blackanddecker.eu** to register your new Black & Decker product and receive updates on new products and special offers.

ENGLISH

Do not forget to register your product!

www.blackanddecker.co.uk/productregistration
Register your product online at **www.blackanddecker.co.uk/productregistration** or send your name, surname and product code to Black & Decker in your country

.

DEUTSCH

Vergessen Sie nicht, Ihr Produkt registrieren zu lassen!

www.blackanddecker.de/productregistration
Lassen Sie Ihr Produkt unter **www.blackanddecker.de/productregistration** online registrieren oder schicken Sie Ihren Nachnamen, Vornamen und den Produktcode an Black & Decker in Ihrem Land.

FRANÇAIS

N'oubliez pas d'enregistrer votre produit !

www.blackanddecker.fr/productregistration
Enregistrez votre produit en ligne sur **www.blackanddecker.fr/productregistration** ou envoyez vos nom, prénom et code produit à Black & Decker dans votre pays.

ITALIANO

Non dimenticate di registrare il prodotto!

www.blackanddecker.it/productregistration
Registrate il prodotto online su **www.blackanddecker.it/productregistration** o inviate nome, cognome e codice del prodotto al centro Black & Decker del vostro paese.

NEDERLANDS

Vergeet niet uw product te registreren!

www.blackanddecker.nl/productregistration
U kunt uw product online registreren op **www.blackanddecker.nl/productregistration** of u kunt uw voornaam, achternaam en productcode opsturen naar Black & Decker in uw land.

ESPAÑOL

¡No olvide registrar su producto!

www.blackanddecker.es/productregistration
Registre su producto on-line en **www.blackanddecker.es/productregistration** o envíe su nombre, apellidos y código de producto a Black & Decker en su país.

PORTUGUÊS

Não se esqueça de registar o seu produto!

www.blackanddecker.pt/productregistration
Registe o seu produto online em **www.blackanddecker.pt/productregistration** ou envie o seu nome, apelido e código do produto para a Black & Decker no seu país.

SVENSKA

Glöm inte att registrera produkten!

www.blackanddecker.se/productregistration
Registrera produkten online på **www.blackanddecker.se/productregistration** eller skicka namn och produktkod till Black & Decker i landet du bor i.

NORSK

Ikke glem å registrere produktet ditt!

www.blackanddecker.no/productregistration
Registrer produktet ditt online på **www.blackanddecker.no/productregistration**, eller send ditt navn, etternavn og produktkode til Black & Decker i ditt eget land.

DANSK

Glem ikke at registrere dit produkt!

www.blackanddecker.dk/productregistration
Registrer dit produkt på internettet på: **www.blackanddecker.dk/productregistration** eller send dit navn, efternavn og produktkode til Black & Decker i dit eget land.

SUOMI

Muistathan rekisteröidä tuotteesi!

www.blackanddecker.fi/productregistration
Rekisteröi tuotteesi verkossa osoitteessa **www.blackanddecker.fi/productregistration** tai lähetä etunimesi, sukunimesi ja tuotekoodi oman maasi Black & Decker -edustajalle.

ΕΛΛΗΝΙΚΑ

Μην ξεχάσετε να καταχωρίσετε το προϊόν σας!

www.blackanddecker.gr/productregistration
Καταχωρίστε το προϊόν σας σε σύνδεση στη σελίδα **www.blackanddecker.gr/productregistration** ή στείλτε το όνομα, επίθετο σας και τον κωδικό πριονωτός στη Black & Decker στη χώρα σας.

Australia & New Zealand www.blackanddecker.com.au www.blackanddecker.co.nz	Australia & New Zealand Stanley Black & Decker 810 Whitehorse Road Box Hill VIC 3128, Australia	Tel. 1800 338 002 (Aust) Tel. 0800 339 258 (NZ)
België/Belgique/Luxembourg www.blackanddecker.be enduser.be@sbdinc.com	Stanley Black & Decker Belgium BVBA Egide Walschaertsstraat 16 2800 Mechelen	Tel. NL +32 15 47 37 65 Tel. FR+32 15 47 37 66 Fax +32 15 47 37 99
Danmark	Black & Decker Roskildevej 22 2620 Albertslund	kundeservice.dk@sbdinc.com www.blackanddecker.dk
Deutschland www.blackanddecker.de infobfge@sdbinc.com	Stanley Black & Decker Deutschland Gmbh Richard-Klinger-Strasse 11 65510 Idstein, Deutschland	Tel. 06126 21-0 Fax 06126 21-2980
Ελλάδα www.blackanddecker.gr greece.service@sbdinc.com **SERVICE:**	Stanley Black & Decker (ΕΛΛΑΣ) Ε.Π.Ε ΓΡΑΦΕΙΑ:Στράβωνος 7 & Βουλιαγμένης 166 74 Γλυφάδα - Αθήνα Ημερος Τόπος 2 -Χάνι Αδάμ 193 00 Ασπρόπυργος - Αθήνα	Τηλ. 210-8981616 Φαξ 210-8983570 Τηλ. Service 210-8985208 Φαξ 210-5597598
España www.blackanddecker.es respuesta.posventa@sbdinc.com	Stanley Black & Decker Ibérica, S.C.A. Parc de Negocis "Mas Blau" Edificio Muntadas, c/Bergadá, 1, Of. A6 08820 El Prat de Llobregat (Barcelona)	Tel. 934 797 400 Fax 934 797 419
France www.blackanddecker.fr	Black & Decker (France) S.A.S. 5 allée des Hêtres B.P. 30084 69579 Limonest Cédex	Tel. 04 72 20 39 20 Fax 04 72 20 39 00
Helvetia www.blackanddecker.ch service@rofoag.ch	ROFO AG Gewerbezone Seeblick 3213 Kleinbösingen	Tel. 026-6749393 Fax 026-6749394
Italia www.blackanddecker.it service.italia@sbdinc.com	Stanley Black & Decker Italia Via Energypark 6 20871 Vimercante (MB)	Tel. 039-9590200 Fax 039-9590313 Numero verde 800-213935
Nederland www.blackanddecker.nl enduser.nl@sbdinc.com	Stanley Black & Decker Netherlands BV Holtum Noordweg 35, 6121 RE BORN Postbus 83, 6120 AB BORN	Tel. +31 164 283 065 Fax +31 164 283 200
Norge	Black & Decker Postboks 4613, Nydalen 0405 Oslo	kundeservice.no@sbdinc.com www.blackanddecker.no
Österreich www.blackanddecker.at service.austria@sbdinc.com	Stanley Black & Decker Austria GmbH Oberlaaerstraße 248, A-1230 Wien	Tel. 01 66116-0 Fax 01 66116-614
Portugal www.blackanddecker.pt resposta.posvenda@sbdinc.com	Black & Decker Limited SARL Quinta da Fonte - Edifício Q55 D. Diniz Rua dos Malhões, 2 e 2A - Piso 2 Esquerdo 2770 - 071 Paço de Arcos	Tel. 214667500 Fax 214667580
Suomi	Black & Decker PL47 00521, Helsinki	asiakaspalvelu.fi@sbdinc.com www.blackanddecker.fi
Sverige	Black & Decker AB Box 94, 431 22 Mölndal	kundeservice.se@sbdinc.com www.blackanddecker.se
Türkiye https://tr.blackanddecker.global info-tr@sbdinc.com	Stanley Black & Decker Turkey Alet Üretim Tic. Ltd.Şti. İçerenköy Mahallesi Umut Sokak No: 10-12 / 82-83-84 Kat: 19 Ataşehir-İstanbul, Türkiye	Tel. +90 216 665 2900 Faks: +90 216 665 2901 Servis Bilgi Tel. +90 216 912 2313
United Kingdom & Republic Of Ireland www.blackanddecker.co.uk emeaservice@sbdinc.com	Black & Decker Meadowfield Avenue, Spennymoor DL16 6YJ, England	Tel. +44 (0)1753 511234 Fax +44 (0)1753 512365
Middle East & Africa www.blackanddecker.ae service.mea@sbdinc.com	Black & Decker P.O. Box - 17164 Jebel Ali Free Zone (South), Dubai, UAE	Tel. +971 4 8863030 Fax +971 4 8863333