BLACK+DECKER®

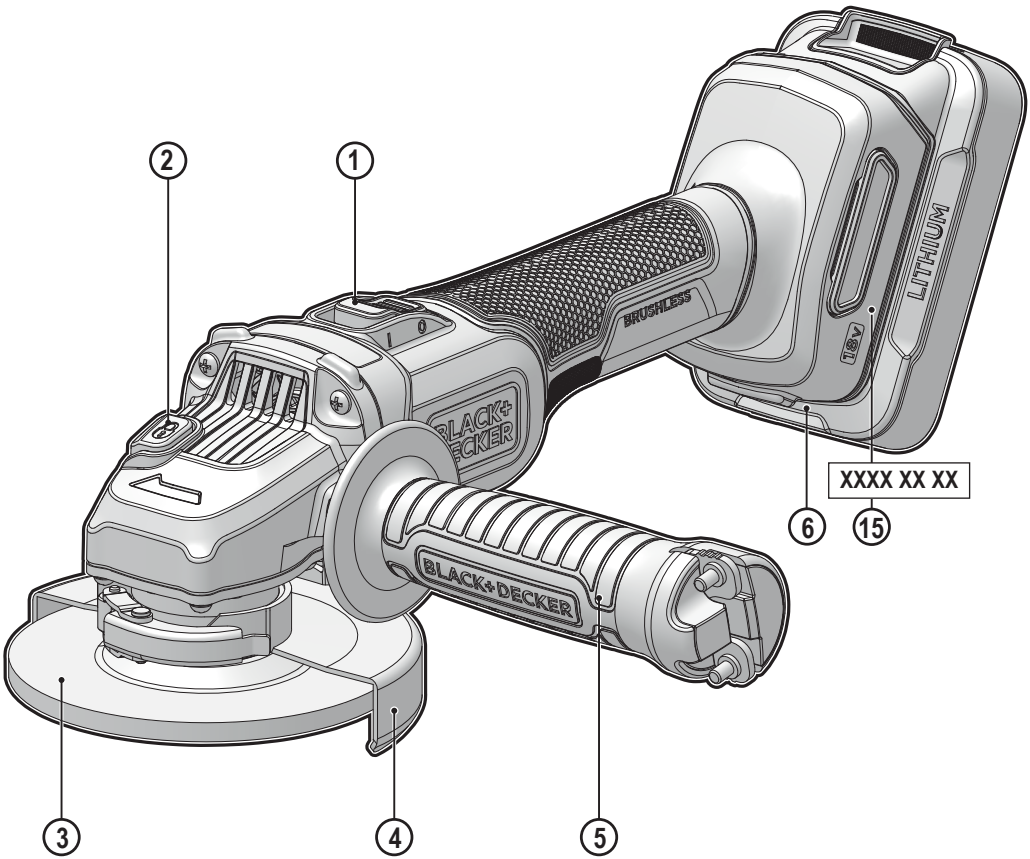

www.blackanddecker.eu

BLCG78

EU: Stanley Black & Decker Deutschland GmbH | Richard-Klinger-Straße 11 65510, Idstein, Germany
UK: Stanley Black & Decker UK Limited | Meadowfield Avenue, Spennymoor, DL16 6YJ, England

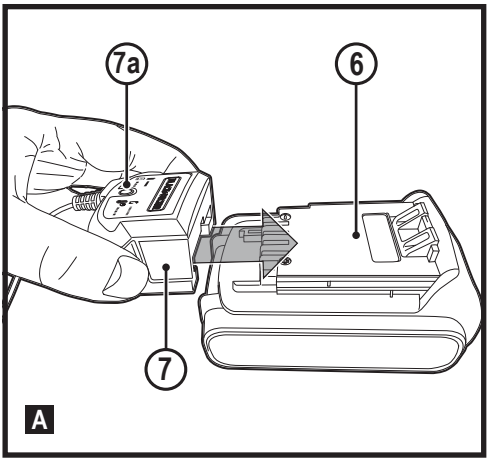
7a
6
7
A

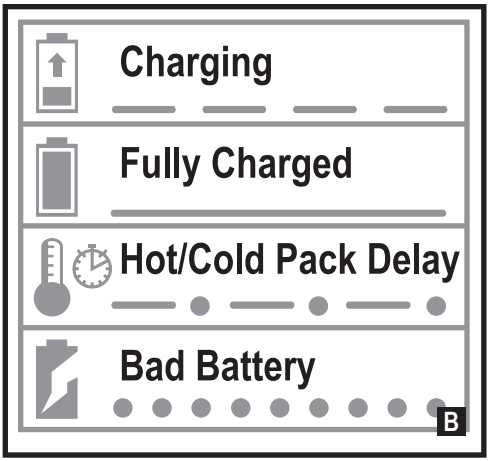
Charging
Fully Charged
Hot/Cold Pack Delay
Bad Battery
B

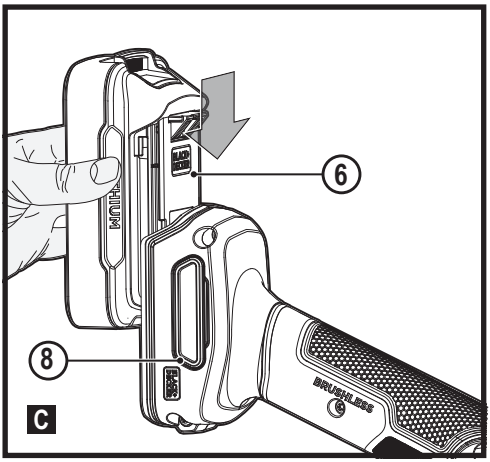
6
8
C

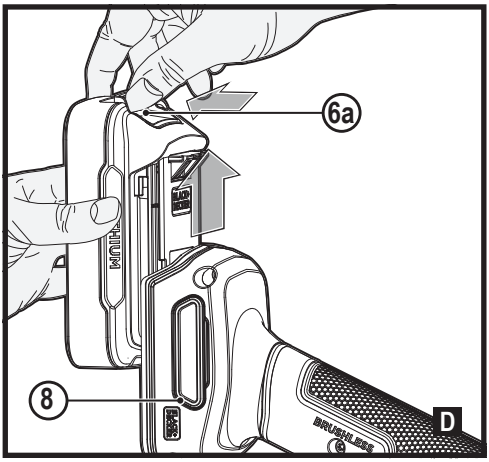
6a
8
D

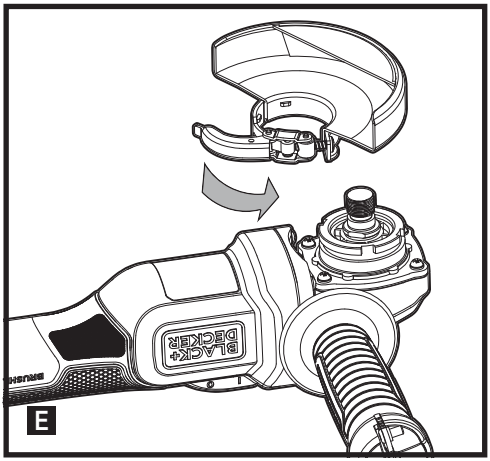
E

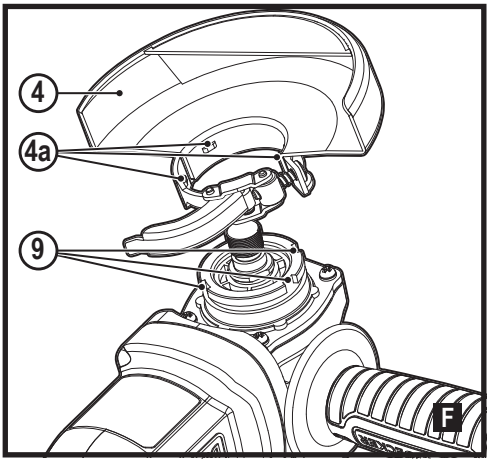
4
4a
9
F

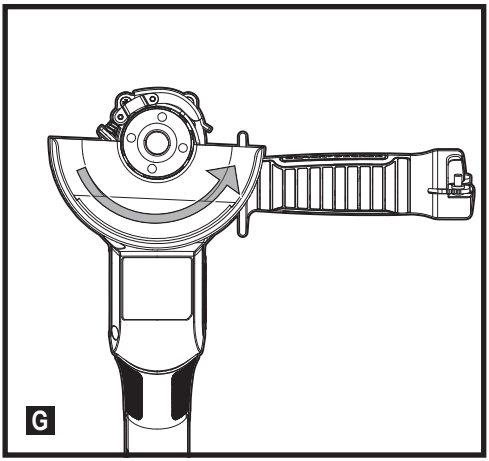
G

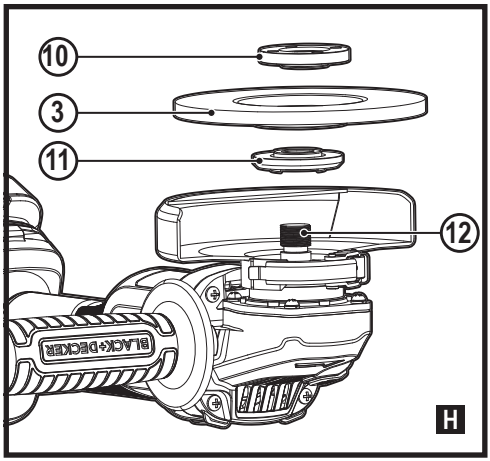
10
3
11
12
BLACK+DECKER
H

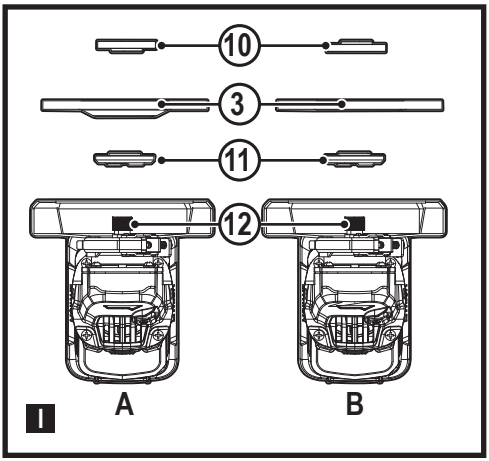
10
3
11
12
A
B
I

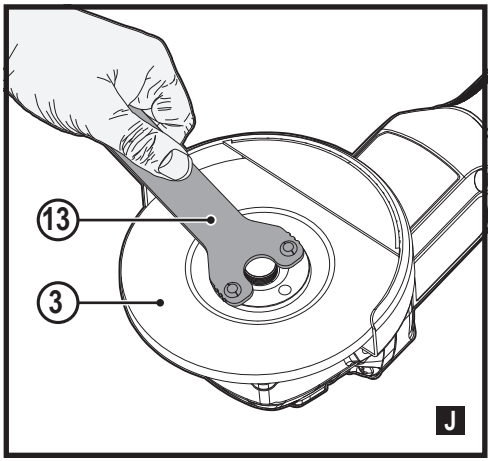
13
3
J

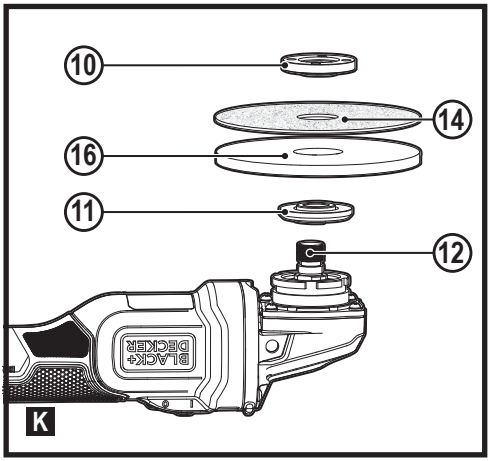
10
14
16
11
12
BLACK+DECKER
K

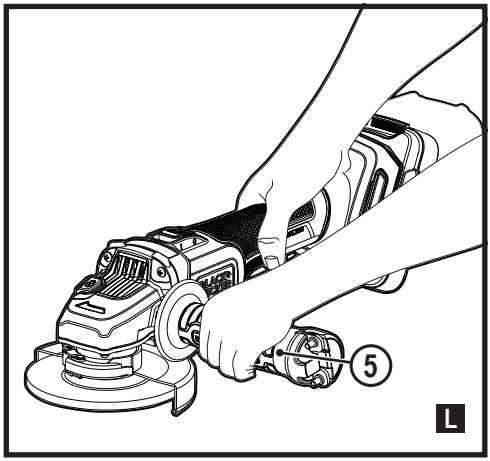
5
L

Intended use

Your BLACK+DECKER BLCG78 angle grinder has been designed for grinding, cutting, sanding, wire brushing metal when using appropriate type of related discs. The tool must be fitted with the appropriate guard. This tool is intended for consumer use only.



Danger! Do not use for wood cutting or woodcarving. Do not use toothed blades of any kind. Serious injury can result.

Safety instructions

General power tool safety warnings



Warning! Read all safety warnings, instructions, illustrations and specifications provided with this power tool. Failure to follow the warnings and instructions listed below may result in electric shock, fire and/or serious injury.

Save all warnings and instructions for future reference. The term "power tool" in all of the warnings listed below refers to your mains operated (corded) power tool or battery operated (cordless) power tool.

1. Work area safety

a. Keep work area clean and well lit. Cluttered or dark areas invite accidents.

b. Do not operate power tools in explosive atmospheres, such as in the presence of flammable liquids, gases or dust. Power tools create sparks which may ignite the dust or fumes.

c. Keep children and bystanders away while operating a power tool. Distractions can cause you to lose control.

2. Electrical safety

a. Power tool plugs must match the outlet. Never modify the plug in any way. Do not use any adapter plugs with earthed (grounded) power tools. Unmodified plugs and matching outlets will reduce risk of electric shock.

b. Avoid body contact with earthed or grounded surfaces such as pipes, radiators, ranges and refrigerators. There is an increased risk of electric shock if your body is earthed or grounded.

c. Do not expose power tools to rain or wet conditions. Water entering a power tool will increase the risk of electric shock.

d. Do not abuse the cord. Never use the cord for carrying, pulling or unplugging the power tool. Keep cord away from heat, oil, sharp edges or moving parts. Damaged or entangled cords increase the risk of electric shock.

e. When operating a power tool outdoors, use an extension cord suitable for outdoor use. Use of a cord suitable for outdoor use reduces the risk of electric shock.

f. If operating a power tool in a damp location is unavoidable, use a residual current device (RCD) protected supply. Use of an RCD reduces the risk of electric shock.

3. Personal safety

a. Stay alert, watch what you are doing and use common sense when operating a power tool. Do not use a power tool while you are tired or under the influence of drugs, alcohol or medication. A moment of inattention while operating power tools may result in serious personal injury.

b. Use personal protective equipment. Always wear eye protection. Protective equipment such as dust mask, non-skid safety shoes, hard hat, or hearing protection used for appropriate conditions will reduce personal injuries.

c. Prevent unintentional starting. Ensure the switch is in the off-position before connecting to power source and/or battery pack, picking up or carrying the tool. Carrying power tools with your finger on the switch or energising power tools that have the switch on invites accidents.

d. Remove any adjusting key or wrench before turning the power tool on. A wrench or a key left attached to a rotating part of the power tool may result in personal injury.

e. Do not overreach. Keep proper footing and balance at all times. This enables better control of the power tool in unexpected situations.

f. Dress properly. Do not wear loose clothing or jewellery. Keep your hair, clothing and gloves away from moving parts. Loose clothes, jewellery or long hair can be caught in moving parts.

g. If devices are provided for the connection of dust extraction and collection facilities, ensure these are connected and properly used. Use of dust collection can reduce dust-related hazards.

h. Do not let familiarity gained from frequent use of tools allow you to become complacent and ignore tool safety principles. A careless action can cause severe injury within a fraction of a second.

4. Power tool use and care

a. Do not force the power tool. Use the correct power tool for your application. The correct power tool will do the job better and safer at the rate for which it was designed.

b. Do not use the power tool if the switch does not turn it on and off. Any power tool that cannot be controlled with the switch is dangerous and must be repaired.

c. **Disconnect the plug from the power source and/or the battery pack from the power tool before making any adjustments, changing accessories, or storing power tools.** Such preventive safety measures reduce the risk of starting the power tool accidentally.
d. **Store idle power tools out of the reach of children and do not allow persons unfamiliar with the power tool or these instructions to operate the power tool.** Power tools are dangerous in the hands of untrained users.
e. **Maintain power tools and accessories. Check for misalignment or binding of moving parts, breakage of parts and any other condition that may affect the power tools operation. If damaged, have the power tool repaired before use.** Many accidents are caused by poorly maintained power tools.
f. **Keep cutting tools sharp and clean.** Properly maintained cutting tools with sharp cutting edges are less likely to bind and are easier to control.
g. **Use the power tool, accessories and tool bits etc. in accordance with these instructions, taking into account the working conditions and the work to be performed.** Use of the power tool for operations different from those intended could result in a hazardous situation.
h. **Keep handles and grasping surfaces dry, clean and free from oil and grease.** Slippery handles and grasping surfaces do not allow for safe handling and control of the tool in unexpected situations.

5. **Battery tool use and care**
a. **Recharge only with the charger specified by the manufacturer.** A charger that is suitable for one type of battery pack may create a risk of fire when used with another battery pack.
b. **Use power tools only with specifically designated battery packs.** Use of any other battery packs may create a risk of injury and fire.
c. **When battery pack is not in use, keep it away from other metal objects, like paper clips, coins, keys, nails, screws, or other small metal objects, that can make a connection from one terminal to another.** Shorting the battery terminals together may cause burns or a fire.
d. **Under abusive conditions, liquid may be ejected from the battery; avoid contact. If contact accidentally occurs, flush with water.** If liquid contacts eyes, additionally seek medical help. Liquid ejected from the battery may cause irritation or burns.
e. **Do not use a battery pack or tool that is damaged or modified.**
Damaged or modified batteries may exhibit unpredictable behaviour resulting in fire, explosion or risk of injury.
f. **Do not expose a battery pack or tool to fire or excessive temperature.** Exposure to fire or temperature above 130 °C may cause explosion**.**
g. **Follow all charging instructions and do not charge the battery pack or tool outside the temperature range specified in the instructions.** Charging improperly or at temperatures outside the specified range may damage the battery and increase the risk of fire.

6. **Service**
a. **Have your power tool serviced by a qualified repair person using only identical replacement parts.** This will ensure that the safety of the power tool is maintained.
b. **Never service damaged battery packs.** Service of battery packs should only be performed by the manufacturer or authorized service providers.

Additional power tool safety warnings



Warning! Additional safety warnings for grinding, sanding, wire brushing, polishing or abrasive cutting-off operations.

- **This power tool is intended to function as a grinder, wire brush, sander or cut-off tool. Read all safety warnings, instructions, illustrations and specifications provided with this power tool.** Failure to follow all instructions listed below may result in electric shock, fire and/or serious injury.
- **Operations such as polishing or hole cutting are not to be performed with this power tool.** Operations for which the power tool was not designed may create a hazard and cause personal injury.
- **Do not convert this power tool to operate in a way which is not specifically designed and specified by the tool manufacturer.** Such a conversion may result in a loss of control and cause serious personal injury.
- **Do not use accessories which are not specifically designed and recommended by the tool manufacturer.** Just because the accessory can be attached to your power tool, it does not assure safe operation.
- **The rated speed of the accessory must be at least equal to the maximum speed marked on the power tool.** Accessories running faster than their rated speed can break and fly apart.
- **The outside diameter and the thickness of your accessory must be within the capacity rating of your power tool.** Incorrectly sized accessories cannot be adequately guarded or controlled.
- **The dimensions of the accessory mounting must fit the dimensions of the mounting hardware of the power tool.**
Accessories that do not match the mounting hardware of the power tool will run out of balance, vibrate excessively and may cause loss of control.
- **Do not use a damaged accessory. Before each use inspect the accessory such as abrasive wheels for**

chips and cracks, backing pad for cracks, tear or excess wear, wire brush for loose or cracked wires. If power tool or accessory is dropped, inspect for damage or install an undamaged accessory. After inspecting and installing an accessory, position yourself and bystanders away from the plane of the rotating accessory and run the power tool at maximum no-load speed. If unusual vibration is detected, turn the power tool off immediately and replace the cut-off wheel. If unusual vibration is not detected, continue to run the power tool for one minute. Damaged accessories will normally break apart during this test time.

- **Wear personal protective equipment. Use safety glasses, and, depending on the application, a face shield. As appropriate, wear breathing protection, such as a dust mask or respirator, hearing protection, gloves and workshop apron capable of stopping small abrasive or workpiece fragments.** The eye protection must be capable of stopping flying debris generated by various applications. The dust mask or respirator must be capable of filtrating particles generated by the particular application. Prolonged exposure to high intensity noise may cause hearing loss.
- **Keep bystanders a safe distance away from work area. Anyone entering the work area must wear personal protective equipment.** Fragments of workpiece or of a broken accessory may fly away and cause injury beyond immediate area of operation.
- **Hold the power tool by insulated gripping surfaces only, when performing an operation where the cutting accessory may contact hidden wiring.** Contact with a "live" wire will also make exposed metal parts of the power tool "live" and could give the operator an electric shock.
- **Never lay the power tool down until the accessory has come to a complete stop.** The spinning accessory may grab the surface and pull the power tool out of your control.
- **Do not run the power tool while carrying it at your side.** Accidental contact with the spinning accessory could snag your clothing, pulling the accessory into your body.
- **Regularly clean the power tool's air vents.** The motor's fan will draw the dust inside the housing and excessive accumulation of powdered metal may cause electrical hazards.
- **Do not operate the power tool near flammable materials.** Sparks could ignite these materials.
- **Do not use accessories that require liquid coolants.** Using water or other liquid coolants may result in electrocution or shock.

Kickback and related warnings

Kickback is a sudden reaction to a pinched or snagged rotating wheel, backing pad, brush or any other accessory. Pinching or snagging causes rapid stalling of the rotating accessory which in turn causes the uncontrolled power tool to be forced in the direction opposite of the accessory's rotation at the point of the binding.

For example, if an abrasive wheel is snagged or pinched by the workpiece, the edge of the wheel that is entering into the pinch point can dig into the surface of the material causing the wheel to climb out or kick out. The wheel may either jump toward or away from the operator, depending on direction of the wheel's movement at the point of pinching. Abrasive wheels may also break under these conditions.

Kickback is the result of power tool misuse and/or incorrect operating procedures or conditions and can be avoided by taking proper precautions as given below.

- **Maintain a firm grip with both hands on the power tool and position your body and arms to allow you to resist kickback forces. Always use auxiliary handle, if provided, for maximum control over kickback or torque reaction during start-up.** The operator can control torque reaction or kickback forces, if proper precautions are taken.
- **Never place your hand near the rotating accessory.** Accessory may kickback over your hand.
- **Do not position your body in the area where power tool will move if kickback occurs.** Kickback will propel the tool in direction opposite to the wheel's movement at the point of snagging.
- **Use special care when working corners, sharp edges, etc. Avoid bouncing and snagging the accessory.** Corners, sharp edges or bouncing have a tendency to snag the rotating accessory and cause loss of control or kickback.
- **Do not attach a saw chain woodcarving blade, segmented diamond wheel with a peripheral gap greater than 10 mm or toothed saw blade.** Such blades create frequent kickback and loss of control.

Safety Warnings Specific for Grinding and Cutting-Off Operations:

- **Use only wheel types that are recommended for your power tool and the specific guard designed for the selected wheel.** Wheels for which the power tool was not designed cannot be adequately guarded and are unsafe.
- **The grinding surface of centre depressed wheels must be mounted below the plane of the guard lip.** An improperly mounted wheel that projects through the plane of the guard lip cannot be adequately protected.
- **The guard must be securely attached to the power tool and positioned for maximum safety, so the least**

amount of wheel is exposed towards the operator. The guard helps to protect operator from broken wheel fragments, accidental contact with wheel and sparks that could ignite clothing.

- **Wheels must be used only for specified applications. For example: do not grind with the side of cut-off wheel.** Abrasive cut-off wheels are intended for peripheral grinding, side forces applied to these wheels may cause them to shatter.
- **Always use undamaged wheel flanges that are of correct size and shape for your selected wheel.** Proper wheel flanges support the wheel thus reducing the posibility of wheel breakage. Flanges for cut-off wheels may be different from grinding wheel flanges.
- **Do not use worn down wheels from larger power tools.** A wheel intended for larger power tool is not suitable for the higher speed of a smaller tool and may burst.
- **When using dual purpose wheels always use the correct guard for the application being performed.** Failure to use the correct guard may not provide the desired level of guarding, which could lead to serious injury.

Additional safety warnings specific for cutting-off operations

- **Do not "jam" the cut-off wheel or apply excessive pressure. Do not attempt to make an excessive depth of cut.** Overstressing the wheel increases the loading and susceptibility to twisting or binding of the wheel in the cut and the possibility of kickback or wheel breakage.
- **Do not position your body in line with and behind the rotating wheel.** When the wheel, at the point of operation, is moving away from your body, the possible kickback may propel the spinning wheel and the power tool directly at you.
- **When the wheel is binding or when interrupting a cut for any reason, switch off the power tool and hold it motionless until the wheel comes to a complete stop. Never attempt to remove the cut-off wheel from the cut while the wheel is in motion otherwise kickback may occur.** Investigate and take corrective action to eliminate the cause of wheel binding.
- **Do not restart the cutting operation in the workpiece. Let the wheel reach full speed and carefully re-enter the cut.** The wheel may bind, walk up or kickback if the power tool is restarted in the workpiece.
- **Support panels or any oversized workpiece to minimise the risk of wheel pinching and kickback.** Large workpieces tend to sag under their own weight. Supports must be placed under the workpiece near the line of cut and near the edge of the workpiece on both sides of the wheel.
- **Use extra caution when making a "pocket cut" into existing walls or other blind areas.** The protruding wheel may cut hidden objects that can cause kickback.
- **Do not attempt to do curved cutting.** Overstressing the wheel increases the loading and susceptibility to twisting or binding of the wheel in the cut and the possibility of kickback or wheel breakage, which can lead to serious injury.

Safety warnings specific for sanding operations:

- **Use proper sized sanding disc paper. Follow the manufacturer's recommendations when selecting sanding paper.** Larger sanding paper extending too far beyond the sanding pad presents a laceration hazard and may cause snagging, tearing of the disc or kickback.

Safety warnings specific for wire brushing opertions

- **Be aware that wire bristles are thrown by the brush even during ordinary operation. Do not overstress the wires by applying excessive load to the brush.** The wire bristles can easily penetrate light clothing and/or skin.
- **If the use of a guard is specified for wire brushing, do not allow any interference of the wire wheel or brush with the guard.** Wire wheel or brush may expand in diameter due to work load and centrifugal forces.



Warning! Contact with or inhalation of dusts arising from sanding applications may endanger the health of the operator and possible bystanders. Wear a dust mask specifically designed for protection against dust and fumes and ensure that persons within or entering the work area are also protected.

Reducing Dust Exposure

Before starting work, check the hazard class of the dust that will be produced when working.

⚠ **WARNING:** Avoid touching or breathing dust as it can be harmful to health. Dust created when using a power tool and when conducting other construction activities can contain chemicals, minerals, or particles known to cause respiratory infections, allergic reactions, cancer, birth defects, or other reproductive harm of the user or bystanders.

◆ Such dust can be generated, for example, when working on hardwoods such as beech or oak, lead-based paint, concrete, masonry, or stones containing quartz.

◆ Material containing asbestos may be handled only by specialists.

◆ Observe the relevant regulations in your country for the materials to be worked on.

◆ Use a dust extractor or extraction system with an officially approved protection class in compliance with the locally

applicable dust protection regulations and suitable for the material to be worked on.

◆ Capture the resulting dust particles directly at the source and avoid deposits in the surrounding area. Use suitable extraction accessories for this purpose.

Additional measures:

◆ Make sure that the workplace is well ventilated.

◆ Wear a respirator appropriate for the type of dust generated.

Residual risks

Additional residual risks may arise when using the tool which may not be included in the enclosed safety warnings. These risks can arise from misuse, prolonged use etc. Even with the application of the relevant safety regulations and the implementation of safety devices, certain residual risks can not be avoided. These include:

◆ Injuries caused by touching any rotating/moving parts.

◆ Injuries caused when changing any parts, blades or accessories.

◆ Injuries caused by prolonged use of a tool. When using any tool for prolonged periods ensure you take regular breaks.

◆ Impairment of hearing.

◆ Health hazards caused by breathing dust developed when using your tool.

Markings on tool

To reduce the risk of injury, user must follow the following instructions:


User must read and understand instruction manual before using this product.


User must wear sufficient eye protection when operating this tool.


User must wear sufficient ear protection when operating this tool.


Always operate with two hands.


Do not use Type B Guard for cut-off operations

Additional safety instructions for batteries and chargers

Batteries

◆ Never attempt to open for any reason.

◆ Do not expose the battery to water.

◆ Do not store in locations where the temperature may exceed 40 °C.

◆ Charge only at ambient temperatures between 10 °C and 40 °C.

◆ Charge only using the charger provided with the tool.

◆ When disposing of batteries, follow the instructions given in the section "Protecting the environment".


Do not attempt to charge damaged batteries.

Chargers

◆ Use your BLACK+DECKER charger only to charge the battery in the tool with which it was supplied. Other batteries could burst, causing personal injury and damage.

◆ Never attempt to charge non-rechargeable batteries.

◆ Have defective cords replaced immediately.

◆ Do not expose the charger to water.

◆ Do not open the charger.

◆ Do not probe the charger.

Safety of others

◆ This appliance/charger can be used by children aged from 8 years and above and persons with reduced physical, sensory or mental capabilities or lack of experience and knowledge if they have been given supervision or instruction concerning use of the appliance in a safe way and understand the hazards involved.

◆ Children shall not play with the appliance. Cleaning and user maintenance shall not be made by children without supervision.


The charger is intended for indoor use only.


Read the instruction manual before use.

Electrical safety


Your charger is double insulated; therefore no earth wire is required. Always check that the mains voltage corresponds to the voltage on the rating plate.

Never attempt to replace the charger unit with a regular mains plug.

◆ If the supply cord is damaged, it must be replaced by the manufacturer or an authorised BLACK+DECKER Service Centre in order to avoid a hazard.

Date Code Position

The production date code (15) consists of a 4-digit year followed by a 2-digit week and is extended by a 2-digit factory code.

Description

⚠ **WARNING:** Never modify the power tool or any part of it. Damage or personal injury could result.

1 On-off switch
2 Spindle lock
3 Grinding/Cutting disc
4 Type C guard
5 Side handle
6 Battery

Features

No-Volt switch

The No-volt function stops the grinder restarting without the switch being cycled if there is a break in the power supply.

Power-OFF™ Overload Protection

The power supply to the motor will be reduced in case of motor overload. With continued motor overload, the tool will shut off. The switch will need to be released then depressed to restart tool. The tool will power off each time the current load reaches the overload current value (motor burn-up point). If continued overload shutdowns occur, apply less force/weight on the tool until the tool will function without the overload engaging.

Soft Start Feature

The soft start feature allows a slow speed build-up to avoid an initial jerk when starting. This feature is particularly useful when working in confined spaces.

Charging a battery (Fig. A)

BLACK+DECKER chargers are designed to charge BLACK+DECKER battery packs.

- Plug the charger (7) into an appropriate outlet before inserting a battery pack (6).
- Insert the battery pack (6) into the charger, making sure the battery pack is fully seated in the battery slots (Figure A).

The LED (7a) will flash indicating that the battery is being charged.

The completion of charge is indicated by the LED remaining on continuously. The pack is fully charged and may be used at this time or left in the charger.



Recharge discharged batteries as soon as possible after use or battery life may be greatly diminished.



For longest battery life, do not discharge batteries fully. It is recommended that the batteries be recharged after each use.

Charger diagnostics (Fig. B)

This charger is designed to detect certain problems that can arise with the battery packs or the power source. Problems are indicated by one LED flashing in different patterns.

Bad battery

The charger can detect a weak or damaged battery. The LED flashes in the pattern indicated on the label. If you see this bad battery blink pattern, do not continue to charge the battery.
Return it to a service center or a collection site for ecycling.

Hot/cold pack delay



When the charger detects a battery that is excessively hot or excessively cold, it automatically starts a Hot/Cold Pack Delay, suspending charging until the battery has normalized. After this happens, the charger automatically switches to the Pack Charging mode. This feature ensures maximum battery life.



The light flashes in the pattern indicated on the label.

Leaving the battery in the charger

The charger and battery pack can be left connected with the LED glowing indefinitely. The charger will keep the battery pack fresh and fully charged. This charger features an automatic tune-up mode which equals or balances the individual cells in the battery pack to allow it to function at peak capacity. Battery packs should be tuned up weekly or whenever the battery no longer delivers the same amount of work. To use the automatic tune-up mode, place the battery pack in the charger and leave it for at least 8 hours.

Important charging notes

- Longest life and best performance can be obtained if the battery pack is charged when the air temperature is between 18 °C – 24 °C. DO NOT charge the battery pack in an air temperature below +4.5 °C), or above +40 °C. This is important and will prevent serious damage to the battery pack.
- The charger and battery pack may become warm to the touch while charging. This is a normal condition, and does not indicate a problem. To facilitate the cooling of the battery pack after use, avoid placing the charger or battery pack in a warm environment such as in a metal shed or an uninsulated trailer.
- If the battery pack does not charge properly:
  - Check operation of receptacle by plugging in a lamp or other appliance;
  - Check to see if receptacle is connected to a light switch which turns power off when you turn out the lights;

- Move the charger and battery pack to a location where the surrounding air temperature is approximately 18 °C – 24 °C;
- If charging problems persist, take the tool, battery pack and charger to your local service center.

- The battery pack should be recharged when it fails to produce sufficient power on jobs which were easily done previously. DO NOT CONTINUE to use under these conditions. Follow the charging procedure. You may also charge a partially used pack whenever you desire with no adverse effect on the battery pack.
- Foreign materials of a conductive nature such as, but not limited to, grinding dust, metal chips, steel wool, aluminum foil, or any buildup of metallic particles should be kept away from charger cavities. Unplug the charger before attempting to clean.
- Do not freeze or immerse the charger in water or any other liquid.

Fitting and removing the battery (Fig. C, D)

- To fit the battery (6), line it up with the receptacle on the tool (8). Slide the battery into the receptacle and push until the battery snaps into place.
- To remove the battery, push the battery release button (6a) while at the same time pulling the battery out of the receptacle.

Assembly

Warning! Before assembly, make sure that the tool is switched off and the battery is removed.

Using the guards

Always using correct guards, including

- when using a Type A (cut-off) wheel guard for facial grinding, the wheel guard may interfere with the workpiece causing poor control;
- when using a Type B (grinding) wheel guard for cutting-off operations with bonded abrasive wheels, there is an increased risk of exposure to emitted sparks and particles, as well as exposure to wheel fragments in the event of wheel burst;
- ;when using a Type A (cut-off), Type B (grinding) or Type C (combination) wheel guard with a wheel-type wire brush with a thickness greater than the maximum thickness, the wires may catch on the guard leading to breaking of wires;

Fitting and removing the guard (Fig. E, F, G)

The tool is supplied with a Guard intended for grinding and some cutting off operations. Please refer to Accessory Chart.

- Place the tool on a table, with the spindle (12) facing up.
- Release the clamping lock and hold the guard over the tool as shown in figure E.
- Align the lugs (4a) with the notches (9) as shown in figure F.
- Press the guard down and rotate it counterclockwise to the required position as shown in figure G.
- Close Quick Release Lever to secure the Guard.

Warning! Never use the tool without the guard unless specifically instructed in Accessory Chart.

Removing

- Open Quick Release Lever.
- Rotate the guard clockwise to align the lugs (4a) with the notches (9).
- Remove the guard from the tool.

Warning! Never use the tool without the guard.

Fitting the side handle

- Screw the side handle (5) into one of the mounting holes in the tool.

Warning! Always use the side handle unless specifically instructed in Accessory Chart'.

Fitting and removing grinding discs, cutting discs or sanding flap pads (Fig. H, I, J, K)

Always use the correct type of disc for your application. Always use discs with the correct diameter and bore size (see technical data).

Fitting

- Fit the guard as described above.
- Place the inner flange (11) onto the spindle (12) as shown in figure. H. Make sure that the flange is correctly located on the flat sides of the spindle.
- Place the disc (3) onto the spindle (12) as shown in figure H. If the disc has a raised centre, make sure that the raised centre faces the inner flange.
- Make sure that the disc locates correctly on the inner flange.
- Place the outer flange (10) onto the spindle. When fitting a grinding disc, the raised centre on the outer flange must face towards the disc (A in Fig. I). When fitting a cutting disc, the raised centre on the outer flange must face away from the disc (B in Fig. I).
- Keep the spindle lock (2) depressed and tighten the outer flange using the two-pin spanner (13) (Fig. J).

Removing

- Keep the spindle lock (2) depressed and loosen the outer flange (10) using the two-pin spanner (13) (Fig. J).
- Remove the outer flange (10) and the disc (3).

Surface grinding with grinding discs

- Allow the tool to reach full speed before touching the tool to the work surface.

- Apply minimum pressure to the work surface, allowing the tool to operate at high speed.
  Grinding rate is greatest when the tool operates at high speed.
- Maintain a 20˚ to 30˚ angle between the tool and work surface.
- Continuously move the tool in a forward and back motion to avoid creating gouges in the work surface.
- Remove the tool from work surface before turning tool off. Allow the tool to stop rotating before laying it down.

Edge grinding with grinding discs

Wheels used for cutting and edge grinding may break or kick back if they bend or twist while the tool is being used to do cutoff work or deep grinding.
Edge grinding/ cutting with a Type 27 wheel must be limited to shallow cutting and notching, less than 13 mm in depth when the wheel is new. Reduce the depth of cutting/notching equal to the reduction of the wheel radius as it wears down. Refer to the 'Grinding and cutting accessory chart' at the end of ths manual for more information.
Edge grinding/cutting with a type 41 wheel of metal/ceramic tiles can be conducted with Guard supplied.

- Allow the tool to reach full speed before touching the tool to the work surface.
- Apply minimum pressure to the work surface, allowing the tool to operate at high speed. Grinding rate is greatest when the tool operates at high speed.
- Position yourself so that the openunderside of the wheel is facing away from you.
- Once a cut is begun and a notch is established in the workpiece, do not change the angle of the cut.
  Changing the angle will cause the wheel to bend and may cause wheel breakage.
  Edge grinding wheels are not designed to withstand side pressures caused by bending.
- Remove the tool from the work surface before turning the tool off. Allow the tool to stop rotating before laying it down.

Warning! Do not use edge grinding/cutting wheels for surface grinding applications if the wheel label has forbidden such use because these wheels are not designed for side pressures encountered with surface grinding. Wheel breakage and serious personal injury may result.

Fitting and removing sanding discs (Fig. K)

For sanding, a backing pad is required. The backing pad is available from your BLACK+DECKER dealer as an accessory.

Fitting

- Place the inner flange (11) onto the spindle (12) as shown (Fig. K). Make sure that the flange is correctly located on the flat sides of the spindle.
- Place the backing pad (16) onto the spindle.
- Place the sanding disc (14) onto the backing pad (16).
- Place the outer flange (10) onto the spindle with the raised centre facing away from the disc.
- Keep the spindle lock (2) depressed and tighten the outer flange using the two-pin spanner (13).
  Make sure that the outer flange is fitted correctly and that the disc is clamped tightly.

Removing

- Keep the spindle lock (2) depressed and loosen the outer flange (10) using the two-pin spanner (13).
- Remove the outer flange (10), the sanding disc (14) and the backing pad (16).

Surface finishing with sanding discs

- Allow the tool to reach full speed before touching the tool to the work surface.
- Apply minimum pressure to work surface, allowing the tool to operate at high speed. Sanding rate is greatest when the tool operates at high speed.
- Maintain a 5˚ to 10˚ angle between the tool and work surface.
- Continuously move the tool in a forward and back motion to avoid creating gouges in the work surface.
- Remove the tool from work surface before turning tool off. Allow the tool to stop rotating before laying it down.

Using sanding backing pads

Always choose the proper grit sanding discs for your application. Sanding discs are available in various grits. Coarse grits yield faster material removal rates and a rougher finish. Finer grits yield slower material removal and a smoother finish.
Begin with coarse grit discs for fast, rough material removal. Move to a medium grit paper and finish with a fine grit disc for optimal finish.

- Coarse = 16 - 30 grit.
- Medium = 36 - 80 grit.
- Fine Finishing = 100 - 120 grit.
- Very Fine Finishing = 150 - 180 grit.
- Allow the tool to reach full speed before touching tool to the work surface.

- Apply minimum pressure to work surface, allowing the tool to operate at high speed. Sanding rate is greatest when the tool operates at high speed.
- Maintain a 5˚ to 10˚ angle between the tool and work surface. The sanding disc should contact approximately 25mm of work surface.
- Move the tool constantly in a straight line to prevent burning and swirling of work surface. Allowing the tool to rest on the work surface without moving, or moving the

tool in a circular motion causes burning and swirling marks on the work surface.
- Remove the tool from work surface before turning tool off. Allow the tool to stop rotating before laying it down.

Precautions to take when sanding paint

- Sanding of lead based paint is **NOT RECOMMENDED** due to the difficulty of controlling the contaminated dust. The greatest danger of lead poisoning is to children and pregnant women.
- Since it is difficult to identify whether or not a paint contains lead without a chemical analysis, we recommend the following precautions when sanding any paint:
  - No children or pregnant women should enter the work area where the paint sanding is being done until all clean up is completed.
  - A dust mask or respirator should be worn by all persons entering the work area. The filter should be replaced daily or whenever the wearer has difficulty breathing.

Note: Only those dust masks suitable for working with lead paint dust and fumes should be used. Ordinary painting masks do not offer this protection. See your local hardware dealer for the proper approved mask.

- NO EATING, DRINKING or SMOKING should be done in the work area to prevent ingesting contaminated paint particles. Workers should wash and clean up BEFORE eating, drinking or smoking.
  Articles of food, drink, or smoking should not be left in the work area where dust would settle on them.
- Paint should be removed in such a manner as to minimize the amount of dust generated.
- Areas where paint removal is occurring should be sealed with plastic sheeting of 4 mils thickness.
- Sanding should be done in a manner to reduce tracking of paint dust outside the work area.
- All surfaces in the work area should be vacuumed and thoroughly cleaned daily for the duration of the sanding project.
  Vacuum filter bags should be changed frequently.
- Plastic drop cloths should be gathered up and disposed of along with any dust chips or other removal debris. They should be placed in sealed refuse receptacles and disposed of through regular trash pick-up procedures. During clean up, children and pregnant women should be kept away from the immediate work area.
- All toys, washable furniture and utensils used by children should be washed thoroughly before being used again.

Fitting and using wire brushes and wire wheels

Wire cup brushes or wire wheels screw directly on the grinder spindle without the use of flanges. A Type B guard is required when using wire wheels. Wear work gloves when handling wire brushes and wheels. They can become sharp. Wheel or brush must not touch guard when mounted or while in use. Undetectable damage could occur to the accessory, causing wires to fragment from accessory wheel or cup.

- Thread the wheel on the spindle by hand.
- Depress spindle lock button and use a wrench on the hub of the wire wheel or brush to tighten the wheel.
- To remove the wheel, reverse the above procedure.

Warning! Failure to properly seat the wheel hub before turning the tool on may result in damage to tool or wheel.
Wire wheels and brushes can be used for removing rust, scale and paint, and for smoothing irregular surfaces.
Note: The same precautions should be taken when wire brushing paint as when sanding paint.

- Allow the tool to reach full speed before touching the tool to the work surface.
- Apply minimum pressure to work surface, allowing the tool to operate at high speed. Material removal rate is greatest when the tool operates at high speed.
- Maintain a 5˚ to 10˚ angle between the tool and work surface for wire cup brushes.
- Maintain contact between the edge of the wheel and the work surface with wire wheels.
- Continuously move the tool in a forward and back motion to avoid creating gouges in the work surface.
  Allowing the tool to rest on the work surface without moving, or moving the tool in a circular motion causes burning and swirling marks on the work surface.
- Remove the tool from the work surface before turning the tool off. Allow the tool to stop rotating before setting it down.

Warning! Use extra care when working over an edge, as a sudden sharp movement of grinder may be experienced. NEVER use a wire wheel without a Guard. Wire may eject from accessory resulting in serious injury!

Mounting and using cutting (type 41) wheels

Cutting wheels include diamond wheels and abrasive discs. Abrasive cutting wheels for metal use are available.
NOTE: Cutting with a type 41 wheel of metal/ceramic tiles can be conducted with Guard supplied.
Failure to use proper flange and guard can result in injury resulting from wheel breakage and wheel contact.
Matching diameter backing flange and threaded clamp nut (included with tool) must be used for cutting wheels.

Mounting cutting wheels

- Place the unthreaded backing flange on spindle with the raised section (pilot) facing up. The raised section (pilot) on the backing flange will be against the wheel when the wheel is installed.
- Place the wheel on the backing flange, centering the wheel on the raised section (pilot).

- Install the threaded clamp nut with the raised section (pilot) facing away from the wheel.
- Depress the spindle lock button and tighten clamp nut with included wrench (13).
- To remove the wheel, depress the spindle lock button and loosen the threaded clamp nut with included wrench.

Warning! Do not use edge grinding/cutting wheels for surface grinding applications because these wheels are not designed for side pressures encountered with surface grinding. Wheel breakage and injury may result.

- Allow tool to reach full speed before touching tool to work surface.
- Apply minimum pressure to work surface, allowing tool to operate at high speed.
  Cutting rate is greatest when the tool operates at high speed.
- Once a cut is begun and a notch is established in the workpiece, do not change the angle of the cut. Changing the angle will cause the wheel to bend and may cause wheel breakage.
- Remove the tool from work surface before turning tool off. Allow the tool to stop rotating before setting it down.

Optional Accessories

Warning! Since accessories, other than those offered by Black & Decker, have not been tested with this product, use of such accessories with this product could be hazardous. To reduce the risk of injury, only Black & Decker recommended accessories should be used with this product.

Warning! Do not use a bonded abrasive wheel that is past its expiration (EXP) date as marked near center of wheel, if provided. Expired wheels are more likely to burst and cause serious injury. Store bonded abrasive wheels in dry location without temperature or humidity extremes. Destroy expired or damaged wheels so they cannot be used.

Recommended accessories for use with your product are available at extra cost from your local dealer or authorized service center. If you need assistance in locating any accessory, please contact Black & Decker. It is important to choose the correct guards, backing pads and flanges to use with grinder accessories. Refer to the Accessories Chart for information on choosing the correct accessories.

Warning! Accessories must be rated for at least the speed recommended on the tool warning label. Wheels and other accessories running over their rated accessory speed may fly apart and cause injury.

Use only the accessories shown in the Accessories Chart of this manual. Accessory ratings must always be above tool speed as shown on tool nameplate.

Warning! Handle and store all abrasive wheels carefully to prevent damage from thermal shock, heat, mechanical damage, etc.

Store in a dry protected area free from high humidity, freezing temperatures or extreme temperature changes.

Use

Warning! Let the tool work at its own pace. Do not overload.

- Be prepared for a stream of sparks when the grinding or cutting disc touches the workpiece.
- Always position the tool in such a way that the guard provides optimum protection from the grinding or cutting disc.

Correct hand position (Fig. L)

Warning! To reduce the risk of serious personal injury, ALWAYS use correct hand position as shown.

Warning! To reduce the risk of serious personal injury, ALWAYS hold securely in anticipation of a sudden reaction. Correct hand position requires one hand on the side handle (5) , with the other hand on the body of the tool.

Switching on and off

- To switch tool on, push Button forward.
- To lock on, push front of Button down into tool.
- To switch off, press back of Button down and allow Button to slide backwards.'

Warning! Do not switch the tool off while under load.

Hints for optimum use

- Firmly hold the tool with one hand around the side handle and the other hand around the main handle.
- When grinding, always maintain an angle of approx. 20°- 30° between the disc and the workpiece surface.

Maintenance

Your BLACK+DECKER corded/cordless appliance/tool has been designed to operate over a long period of time with a minimum of maintenance. Continuous satisfactory operation depends upon proper tool care and regular cleaning.

Warning! Before performing any maintenance on corded/cordless power tools:

- Switch off and unplug the appliance/tool.
- Or switch off and remove the battery from the appliance/tool if the appliance/tool has a separate battery pack.
- Or run the battery down completely if it is integral and then switch off.
- Unplug the charger before cleaning it. Your charger does not require any maintenance apart from regular cleaning.
- Regularly clean the ventilation slots in your appliance/tool/charger using a soft brush or dry cloth.
- Regularly clean the motor housing using a damp cloth. Do not use any abrasive or solvent-based cleaner.

Please refer to the back page of this manual for service center contact information, or visit **www.2helpu.com**.

Cleaning

⚠ **WARNING:** Electrical shock and mechanical hazard. Disconnect the plug from the power source and/or

remove the battery pack, if detachable, from the product before cleaning.

⚠ **WARNING:** To ensure safe and efficient operation, always keep the product and the ventilation slots (if applicable) clean. Main housing and ventilation slots can be cleaned using a dry, soft non-metallic brush and/or a suitable vacuum cleaner as often as dirt is seen. Wear approved eye protection and approved dust mask when performing this procedure.

⚠ **WARNING:** Never use solvents or other harsh chemicals for cleaning the non-metallic parts of the product. These chemicals may weaken the materials used in these parts. Use a cloth dampened only with water and mild soap. Never let any liquid get inside the product. Never immerse any part of the product into a liquid.

Protecting the environment



Products/batteries are recyclable, but if marked with the crossed-out bin, they must not be disposed of with normal household waste.

Run the batteries down completely and separate them, and separate any light sources from the product if possible. It is the user's responsibility to delete personal data from the product. Then take the waste to an official waste collection center or a participating retailer who will often accept it free of charge. Packaging should be discarded based on the marked material code. Operating and safety instructions should only .be discarded once the applicable product is no longer in use

Please check with your local community/municipality for waste management guidance. For further information, visit **www.2helpU.com** and scan the above QR code

Documents Available Online

www.2helpU.com/DoC/ or
www.2helpU.com/DoC/index/xxx*

*For direct access, replace "xxx" with the product's model number given on the product rating label or packaging.

- Instruction Manual
- Declaration of Conformity (DoC)
- Product Emission Data (PED): Information about Noise, Vibration and Dust (not applicable for all products)



WARNING: Read all safety warnings, instructions, illustrations, and specifications in this manual, including the battery and charger sections provided in an original tool manual or the separate Batteries and Chargers manual. Manuals can be obtained by contacting Customer Service (refer to the back page of this manual).

Technical Data

		BLCG78 Type 1
Input voltage	V_{DC}	18
Rated speed (No load)	min^{-1}	8500
Rated capacity	mm	125
Disc bore	mm	22
Max disc thickness		
Grinding discs	mm	6.4
Cutting discs	mm	3.0
Wheel-type wire brush	mm	13
Spindle size		M14
Weight (with Type C guard, flanges and auxiliary handle)	Kg	1.9
18 V_{DC} Batteries (Li-Ion)		
BDL2018 / BL2018	Ah	2.0
Weight	kg	0.37
BL2518 / BDL2518	Ah	2.5
Weight	kg	0.37
BL4018	Ah	4.0
Weight	kg	0.66
BL5018	Ah	5.0
Weight	kg	0.65
230V Chargers		
All Output Voltages	V_{DC}	18
UK-N517390/Euro-N517388	Amps	1.0
UK-90642264/Euro-90642266	Amps	2.0
UK-N494099/Euro-N494098	mA	400

Guarantee

Black & Decker is confident of the quality of its products and offers consumers a 24 month guarantee from the date of purchase. This guarantee is in addition to and in no way prejudices your statutory rights.

The guarantee is valid within the territories of the Member States of the European Union and the European Free Trade Area and the United Kingdom.

To claim on the guarantee, the claim must be in accordance with Black & Decker Terms and Conditions and you will need to submit proof of purchase to the seller or an authorised repair agent.

Terms and conditions of the Black & Decker 2 year guarantee and the location of your nearest authorised repair agent can be obtained on the Internet at **www.2helpU.com**, or by contacting your local Black & Decker office at the address indicated in this manual.

Please visit our website www.blackanddecker.co.uk to register your new Black & Decker product and receive updates on new products and special offers.

Accessory Type	Accessory	Guard
Wheel Type 27, Grinding	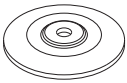	 Type C guard supplied or Type B
Wheel Type 41 (1A) Metal Cutting		 Type C Guard supplied or Type A
Diamond Cutting Wheel Metal Cutting	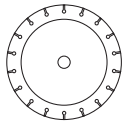	 Type C Guard supplied or Type A
Wheel-Type Wire Brush		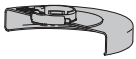 Type B
Cup Type Wire Brush		Guard not required
Flap Disc	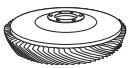	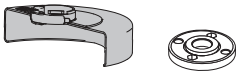 Type B
Flexible Abrasive (e.g. sandpaper) (supported by a flexible backing pad)		 Guard not required

Guidelines for Guards and Accessories		
Non-approved Wheels	Type 11 / T11	

Additional Information for Guards and Accessories

When using segmented diamond wheels, use only diamond wheels with a peripheral gap not greater than 10 mm and negative rake angle.	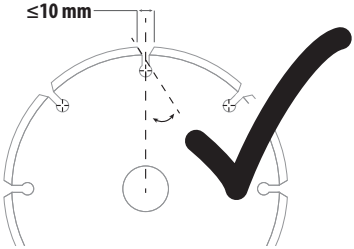
DO NOT USE segmented diamond wheels with a peripheral gap greater than 10 mm and/or a positive rake angle.	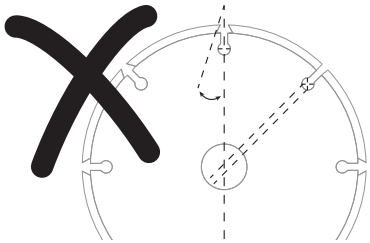
For all grinding, sanding, and wheel type wire brushing accessories, the lowest portion of the accessory must be contained within the guard enclosure with 2 mm or greater clearance to the bottom lip of guard.	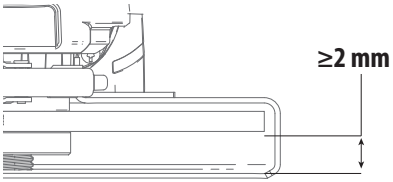

Australia & New Zealand www.blackanddecker.com.au www.blackanddecker.co.nz	Australia & New Zealand Stanley Black & Decker 810 Whitehorse Road Box Hill VIC 3128, Australia	Tel. 1800 338 002 (Aust) Tel. 0800 339 258 (NZ)
België/Belgique/Luxembourg www.blackanddecker.be enduser.be@sbdinc.com	Stanley Black & Decker Belgium BVBA Egide Walschaertsstraat 16 2800 Mechelen	Tel. NL +32 15 47 37 65 Tel. FR +32 15 47 37 66 Fax +32 15 47 37 99
Danmark	Black & Decker Roskildevej 22 2620 Albertslund	kundeservice.dk@sbdinc.com www.blackanddecker.dk
Deutschland www.blackanddecker.de infobfge@sdbinc.com	Stanley Black & Decker Deutschland Gmbh Richard-Klinger-Strasse 11 65510 Idstein, Deutschland	Tel. 06126 21-0 Fax 06126 21-2980
Ελλάδα www.blackanddecker.gr greece.service@sbdinc.com **SERVICE:**	Stanley Black & Decker (ΕΛΛΑΣ) Ε.Π.Ε ΓΡΑΦΕΙΑ:Στράβωνος 7 & Βουλιαγμένης 166 74 Γλυφάδα - Αθήνα Ημερος Τόπος 2 -Χάνι Αδάμ 193 00 Ασπρόπυργος - Αθήνα	Τηλ. 210-8981616 Φαξ 210-8983570 Τηλ. Service 210-8985208 Φαξ 210-5597598
España www.blackanddecker.es respuesta.posventa@sbdinc.com	Stanley Black & Decker Ibérica, S.C.A. Parc de Negocis “Mas Blau” Edificio Muntadas, c/Bergadá, 1, Of. A6 08820 El Prat de Llobregat (Barcelona)	Tel. 934 797 400 Fax 934 797 419
France www.blackanddecker.fr	Black & Decker (France) S.A.S. 5 allée des Hêtres B.P. 30084 69579 Limonest Cédex	Tel. 04 72 20 39 20 Fax 04 72 20 39 00
Helvetia www.blackanddecker.ch service@rofoag.ch	ROFO AG Gewerbezone Seeblick 3213 Kleinbösingen	Tel. 026-6749393 Fax 026-6749394
Italia www.blackanddecker.it service.italia@sbdinc.com	Stanley Black & Decker Italia Via Energypark 6 20871 Vimercante (MB)	Tel. 039-9590200 Fax 039-9590313 Numero verde 800-213935
Nederland www.blackanddecker.nl enduser.nl@sbdinc.com	Stanley Black & Decker Netherlands BV Holtum Noordweg 35, 6121 RE BORN Postbus 83, 6120 AB BORN	Tel. +31 164 283 065 Fax +31 164 283 200
Norge	Black & Decker Postboks 4613, Nydalen 0405 Oslo	kundeservice.no@sbdinc.com www.blackanddecker.no
Österreich www.blackanddecker.at service.austria@sbdinc.com	Stanley Black & Decker Austria GmbH Oberlaaerstraße 248, A-1230 Wien	Tel. 01 66116-0 Fax 01 66116-614
Portugal www.blackanddecker.pt resposta.posvenda@sbdinc.com	Black & Decker Limited SARL Quinta da Fonte - Edifício Q55 D. Diniz Rua dos Malhões, 2 e 2A - Piso 2 Esquerdo 2770 - 071 Paço de Arcos	Tel. 214667500 Fax 214667580
Suomi	Black & Decker PL47 00521, Helsinki	asiakaspalvelu.fi@sbdinc.com www.blackanddecker.fi
Sverige	Black & Decker AB Box 94, 431 22 Mölndal	kundeservice.se@sbdinc.com www.blackanddecker.se
Türkiye https://tr.blackanddecker.global info-tr@sbdinc.com	Stanley Black & Decker Turkey Alet Üretim Tic. Ltd.Şti. İçerenköy Mahallesi Umut Sokak No: 10-12 / 82-83-84 Kat: 19 Ataşehir-İstanbul, Türkiye	Tel. +90 216 665 2900 Faks: +90 216 665 2901 Servis Bilgi Tel. +90 216 912 2313
United Kingdom & **Republic Of Ireland** www.blackanddecker.co.uk emeaservice@sbdinc.com	Black & Decker Meadowfield Avenue, Spennymoor DL16 6YJ, England	Tel. +44 (0)1753 511234 Fax +44 (0)1753 512365
Middle East & Africa www.blackanddecker.ae service.mea@sbdinc.com	Black & Decker P.O. Box - 17164 Jebel Ali Free Zone (South), Dubai, UAE	Tel. +971 4 8863030 Fax +971 4 8863333

Česky www.blackanddecker.cz obchod@sbdinc.com	Stanley Black & Decker Czech Republic S.R.O. Turkova 5b 149 00 Praha 4 Česká Republika	Tel. 00420 261 009 772 Fax. 00420 261 009 784 Servis 00420 244 403 247
	Adresy servisu Band Servis Klášterského 2 CZ-140 00 Praha 4	Tel. 00420 244 403 247 Fax. 00420 261 009 784 Servis 00420 244 403 247
http://www.bandservis.cz	Band Servis K Pasekám 4440 CZ-76001 Zlín	Tel. 00420 577 008 550, 1 Fax. 00420 577 008 550
Hungarian www.rotelkft.hu	Black & Decker Központi Garanciális-és Márkaszerviz 1163 Budapest (Sashalom) Thököly út 17.	Tel. 403-2260 Fax 404-0014
e-mail: szerviz@inox.hu www.inox.hu	INOX Trading and Manufacturing LLC Szolnoki út 27-29. 6000 Kecskemét	Tel. +36 30 370 7033
Polski	Adres serwisu centralnego ERPATECH ul. Bakaliowa 26 05-080 Mościska	Tel. 022-8620808 Fax. 022-8620809