BIOBIDET®
BY BEMIS

BLISS BB-900 BIDET TOILET SEAT

USER MANUAL



BB900E

Registration and Installation Resources

Questions?
We're here to help.

847.458.2334

support@biobidet.com

www.biobidet.com

TABLE OF CONTENTS

04 PRODUCT INFORMATION

Important Safeguards
Grounding Instructions
Overview
Parts List
Remote Control

10 GETTING STARTED

Functions & Features

14 PRODUCT INSTALLATION

Installation Guide

19 MAINTENANCE

Removing Your Bidet
Cleaning Your Bidet
Extended Travel
Cleaning the Nozzle
Troubleshooting
Specifications

23 WARRANTY

Warranty

IMPORTANT SAFEGUARDS

PLEASE OBSERVE THE FOLLOWING PRECAUTIONS AND INSTRUCTIONS BEFORE INSTALLATION AND USE.

DANGER - To reduce risk of electrocution:

- Do not place or store product where it can fall or be pulled into a tub or sink.
- Do not place in or drop into water or other liquid.
- Do not reach for a product that has fallen into water. Unplug immediately.

WARNING - To reduce risk of burns, electrocution, fire, or injury to persons:

- This product must be connected to a GFCI receptacle (wall outlet). Do not connect the power cord if it is damaged or broken. Do not plug the product into a loose electric outlet.
- It is recommended to operate this product on a separate circuit. Sharing a circuit could cause the breaker to trip or lights to flicker.
- Consult a qualified electrician or service person if you are not sure whether the unit is properly grounded.
- Do not open this product for repair without authorization from the manufacturer. Only qualified service personnel should service this product. Do not use accessories not recommended by the manufacturer.
- Connect this product to a potable cold water supply line.
- Close supervision is necessary when this product is used by children, elderly, or adults with sensitive skin. A low temperature burn may occur when the skin has been in contact with an object at relatively low temperature for an extended period of time.
- If using any chemical toilet bowl cleaner, be sure to wipe up any spills that splash onto the bidet. Do not use benzene or any acid chemical detergent, as they can cause discoloration. Only neutral detergents are permitted.

GROUNDING INSTRUCTIONS

This product should be grounded. In the event of an electrical short circuit, grounding reduces the risk of electric shock by providing an escape wire for the electric current. This product is equipped with a cord having a grounding wire with a grounding plug. The plug must be plugged into an outlet that is properly installed and grounded.

DANGER- Improper use of the grounding plug can result in a risk of electric shock.

If repair or replacement of the cord or plug is necessary, do not connect the grounding wire to either flat blade terminal. The wire with insulation having an outer surface that is green with or without yellow stripes is the grounding wire.

Check with a qualified electrician or serviceman if the grounding instructions are not completely understood, or if in doubt as to whether the product is properly grounded.

This product is for use on a nominal 120 V circuit, and has a grounding plug that looks like the plug illustrated in sketch A. A temporary adapter, which looks like the adapter illustrated in sketches B and C, may be used to connect this plug to a 2-pole receptacle as shown in sketch B if a properly grounded outlet is not available. The temporary adapter should be used only until aproperly grounded outlet (sketch A) can be installed by a qualified electrician. The green colored rigid ear, lug, and the like extending from the adapter must be connected to a permanent ground such as a properly grounded outlet box cover. Whenever the adapter is used, it must be held in place by the screw.

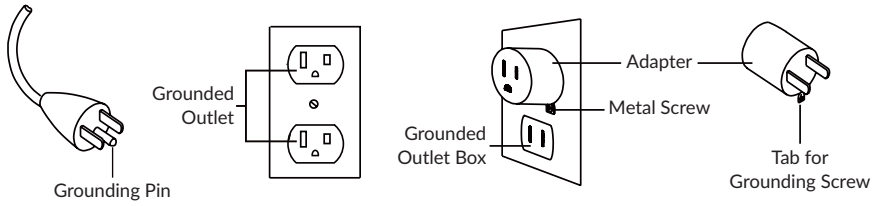

(A) (B) (C)

OVERVIEW

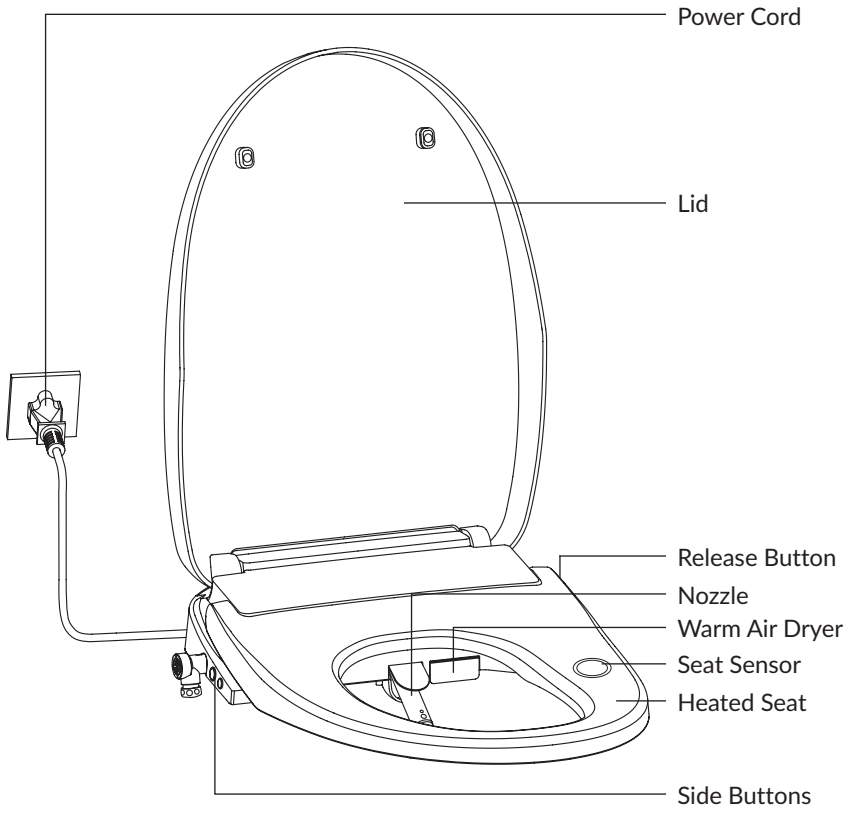

Side Buttons

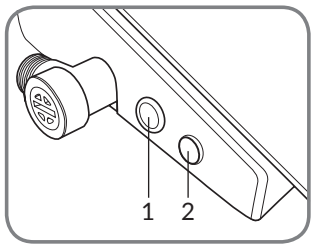

1. Power/Stop
2. Auto Wash

Stainless Steel Nozzle

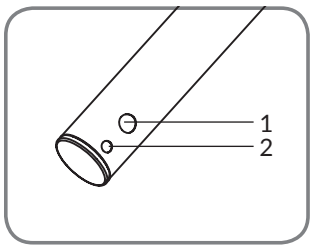

1. Rear Wash
2. Front Wash

PARTS LIST

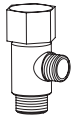

T-Valve
*Rubber gasket inside

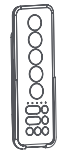

Remote Control & Holder

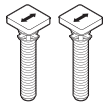

(2) Stay·Tite® Bolts



(2) Stay·Tite® Nuts

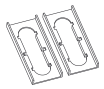

(2) Mounting Brackets

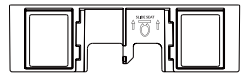

Mounting Plate

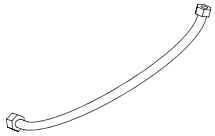

24” Bidet Hose (1/2” to 1/2”)



(2) AAA Batteries



Spare Nozzle Tip

Recommended Installation Tools



5/8” Wrench



Wrench



Phillips Screwdriver

REMOTE CONTROL

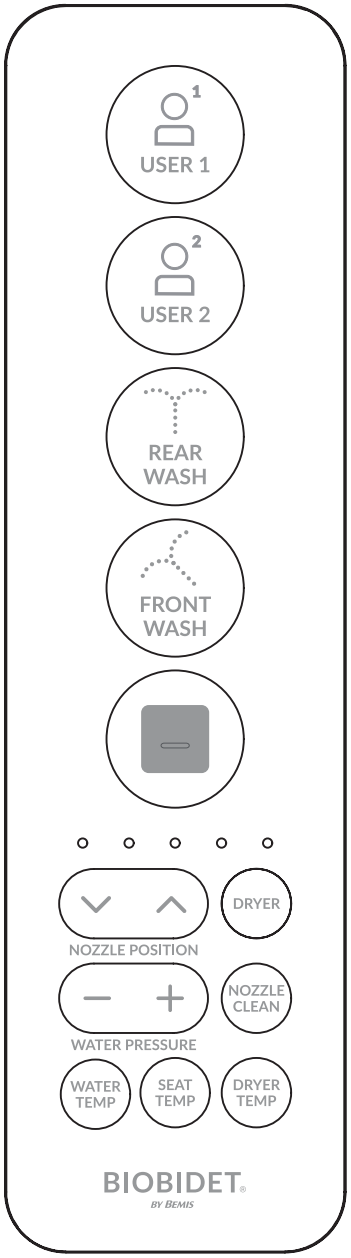

Remote Control Pairing

(Your bidet will come with the remote already paired. Follow these instructions in the event the bidet seat is not responding to the remote.)

- Unplug the bidet seat. Press and hold the “STOP” button on the remote until the indicator lights flash.
- Hold the remote close to the bidet seat and plug it back in. The indicator lights will stop flashing when the remote has successfully paired.



User Presets



Rear Wash



Front Wash



Stop Button



Adjustable Nozzle Position



Adjustable Water Pressure



Dryer



Nozzle Clean



Adjustable Water Temperature



Adjustable Seat Temperature



Adjustable Dryer Temperature

FUNCTIONS & FEATURES

Operating Your Bidet

Sit Down On The Seat

This product includes a built-in seat sensor that must be activated with skin contact in order to operate bidet functions. The automatic cleaning feature will rinse the nozzle before each use.

User 1

Press to activate your preset wash settings. The default setting is 2 minutes of medium pressure Front Wash, and 4 minutes warm air dryer.

User 2

Press to activate your preset wash settings. The default setting is 2 minutes of medium pressure Rear Wash, and 4 minutes warm air dryer.

Settings User Presets

To set your User 1 or User 2 preset, press and hold the button. Press your desired wash mode, nozzle position, water temperature and pressure, and duration of the wash. When finished, press and hold the User button again until you hear a beep. The wash mode has been saved for future use. If you don't press and hold the button within 15 minutes, your settings will not be saved.

Rear Wash

Press "Rear Wash" to activate an oscillating rear wash. Press again to disable oscillation.

Front Wash

Press "Front Wash" to activate an oscillating front wash. Press again to disable oscillation.

Stop

Stops all functions.

Adjustable Nozzle Position

Adjust the nozzle position forward or backward to achieve maximum cleanliness and comfort by pressing the "Nozzle Position (^, v) buttons.

Adjustable Water Pressure

Press the "Water Pressure" (+, -) buttons to adjust the water pressure to your liking.

Dryer

Press to activate the warm air dryer for 4 minutes.

Nozzle Clean

Press to extend the nozzle for manual cleaning. Press again or press the "Stop" button to retract the nozzles when finished. This feature can only be activated when the seat is not occupied.

Adjustable Temperatures

Adjust the temperatures of the warm water, heated seat, or warm air dryer to your liking. Press the button to cycle temperatures between Off, Low, Medium, and High.



DRYER

Eco Mode

Press and hold the “Dryer” button to turn on the Eco Mode. When activated, the seat temperature will automatically be reduced when unoccupied. Press and hold again to turn it off.

DRYER TEMP

Night Light

Press and hold the “Dryer Temp” button to turn the night light on. Press and hold again to adjust the brightness, or turn it off.

SEAT TEMP

Sound On/Off

Press and hold the “Seat Temp” button to turn the sound on/off.

NOZZLE CLEAN

Ultraviolet (UV) Sterilization

The built-in UV sterilizer automatically cleanses the nozzle after each use. When the Power/Stop button glows purple, that means UV sterilization is in progress. Press and hold the “Nozzle Clean” button to turn this function on/off.

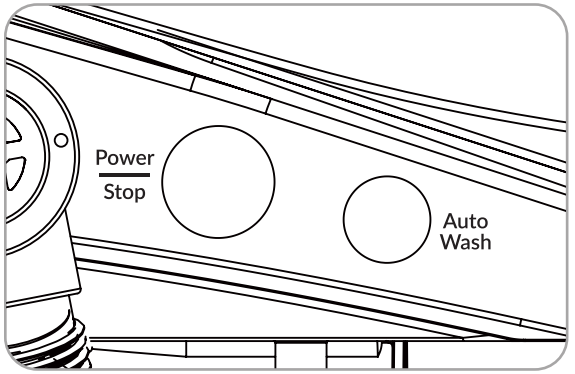

Power/Stop (Side Button)

Turn the bidet on/off by pressing the “Power/Stop” button on the side. Press and hold to enter standby mode.

Press the power/stop button while seated to stop any active functions. Press again to activate the dryer.

- When the power button is **blue**, it is ready to use.
- When the power button is **blinking purple**, it is in UV sterilization mode or in use.

Auto Wash (Side Button)

Press to activate a 2 minute rear wash followed by a 4 minute dry. To stop press the “Power/Stop” button.

Eco Mode

Press and hold the Auto Wash (Side Button) to turn on Eco Mode. When activated, the seat temperature will automatically be reduced when unoccupied and the Power/Stop button will blink blue. Press and hold again to turn off.

You can also turn Eco Mode on/off by pressing and holding the “Dryer” button on the remote.

“Power Light” On/Off

Press and hold “Water Temp” on the remote to turn the power light on the side of the seat on/off.

INSTALLATION GUIDE

CAUTION BEFORE INSTALLATION

Do not plug in before installation. Please contact our service center at 847.458.2334 for alternate fittings or assistance with this process.

1. Turn Off Water

Turn off the water shut-off valve. Drain the toilet tank completely by flushing the toilet. Unscrew the hose connected to the toilet tank.

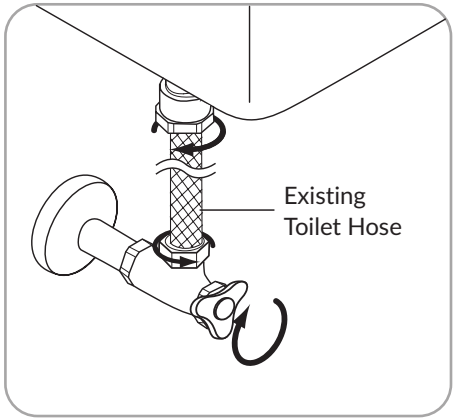

2. Remove Seat & Lid

Remove mounting bolts to release the existing toilet seat from the toilet.



3. Install Mounting Plate

Place the mounting plate and bolt guides over the mounting holes. Insert the Stay·Tite® bolts through the metal mounting brackets, mounting plate, and mounting holes. Make sure to align the teeth on the bolts with the slots in the mounting bracket. Lightly finger tighten the Stay·Tite® nuts to the under side of the bowl.

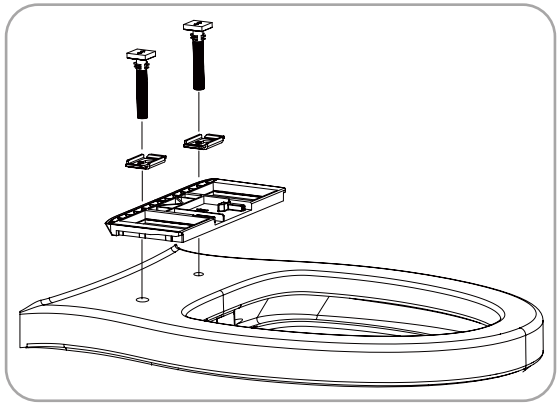

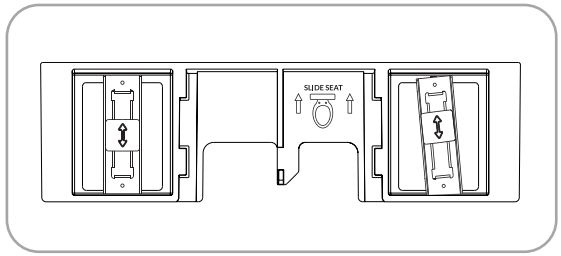

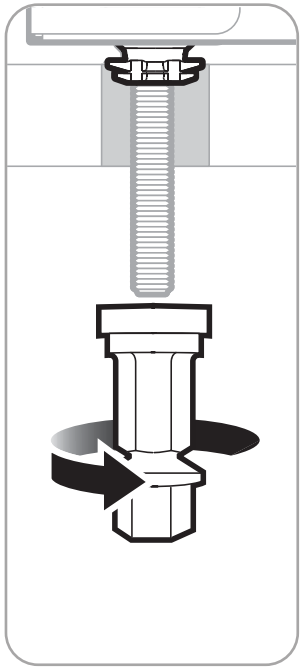

4. Install Your Bidet Seat On The Bowl

Slide the bidet seat all the way onto the mounting plate until you hear a click. Adjust the seat front to back and side to side for a proper fit.

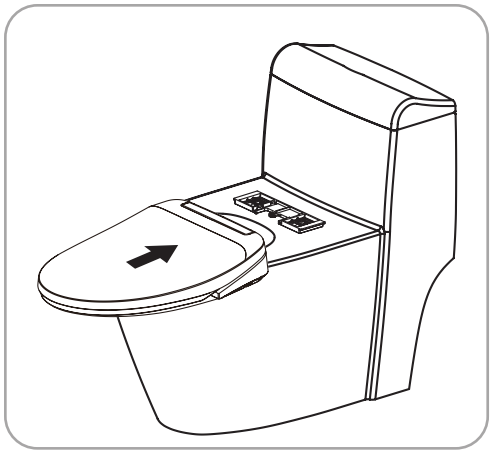

5. Tighten Stay·Tite®

Holding the seat centered on the bowl, tighten the Stay·Tite® nut. Once the lower portions have snapped off, the bolts will never loosen. On thinner toilets, nuts can be further tightened if seat does not feel secure after snapping off the nuts.

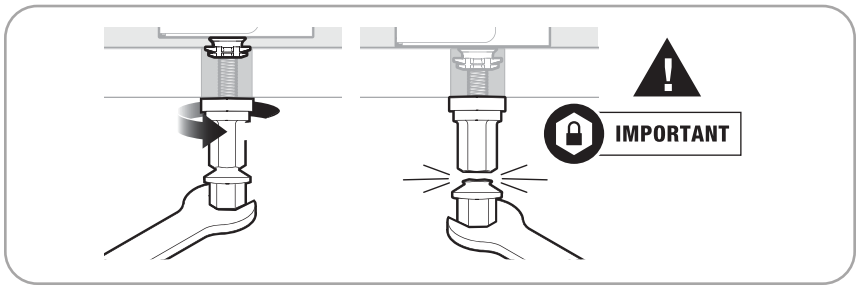

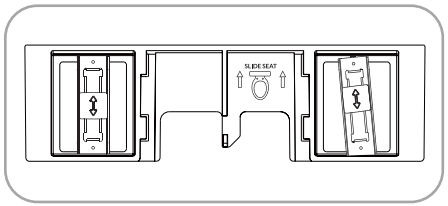

Note: Slight distortion of the bracket may occur due to the strong clamping force of Stay·Tite®. If the bracket slightly shifts during tightening, this will not affect the firm hold of the seat in place.

6. Connect The Water Hose

*Shut-off valve may vary. If supplied parts do not fit, please call 847.458.2334. Alternate fittings are available upon request.

a. Install the t-valve on to the toilet tank. Ensure the rubber gasket is properly seated inside the t-valve.

b. Connect the toilet hose to the water shut-off valve and t-valve.

c. Connect the bidet hose to the bidet seat and t-valve.

d. Open the water shut-off valve. Check for any leaking or dripping.

7. Plug It In!

Plug the power cord into a 120V power outlet.

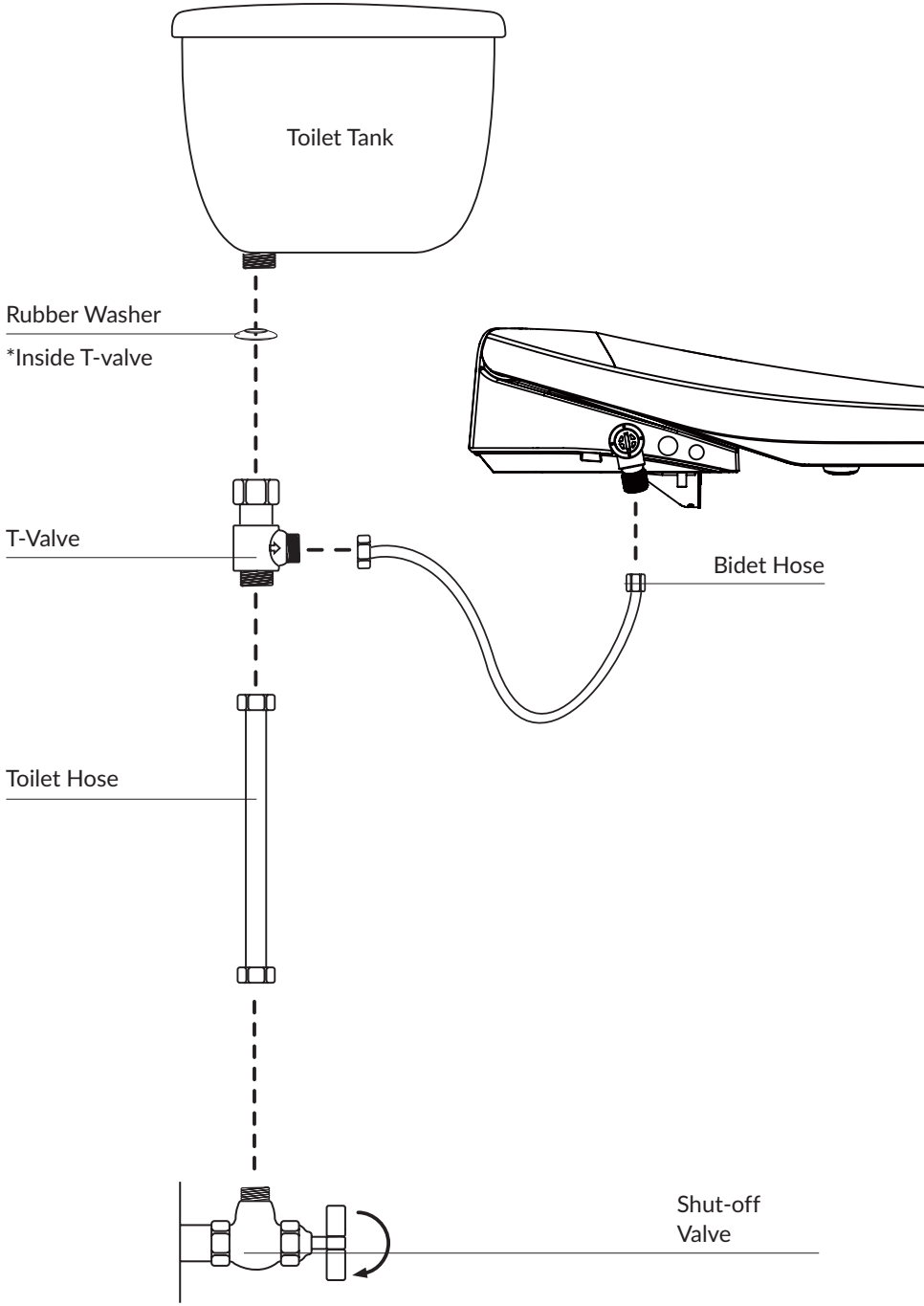

Please contact our service center at 847.458.2334 if you have any questions.

8. Mounting the Remote

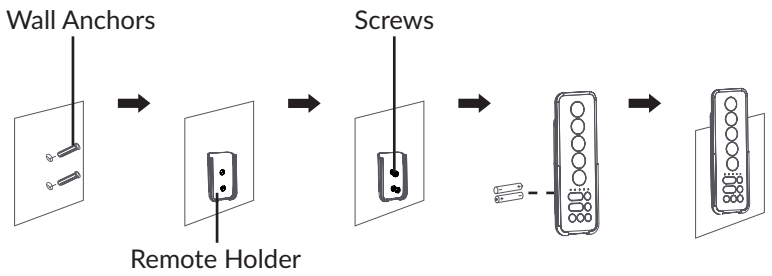

a. Drill two 6mm holes on the wall that lines up with the remote holder.

b. Install the wall anchors in the newly drilled holes.

c. Place the remote holder over the wall anchors and attach it to the wall with the provided screws.

d. Insert supplied batteries (2 AAA), close the battery cover, and place the remote control in the holder.

MAINTENANCE

Removing Your Bidet

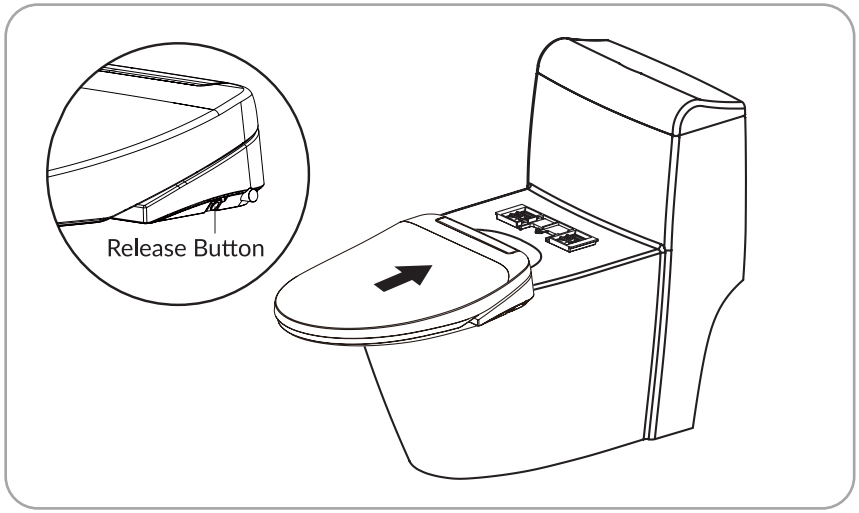

1. Disconnect the power plug.
2. Close water supply shut-off valve.
3. Remove the bidet seat from toilet as illustrated.

Cleaning Your Bidet

- Do not use thinner, benzene or toilet bowl cleaner, as it may cause discoloration or damage.
- Disconnect the power cord and use a wet cloth when you clean this product. Do not spray water directly on to this product.

Extended Travel

When the seat will not be used for more than a few days, it is recommended to unplug the unit and turn off the water shutoff valve.

Cleaning The Nozzle

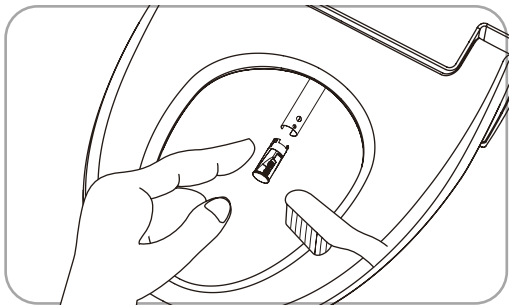

1. Press the “Nozzle Clean” button without occupying the seat. The nozzle will extend and can be cleaned with a soft brush. Do not try to pull the nozzle out with force, or the nozzle could break.
2. If the nozzle is clogged, replacing the nozzle tip is recommended.

   To remove the nozzle tip, hold the metal part of the nozzle steady. Insert a flathead screwdriver into the notch on the back of the white nozzle tip and gently pry the tip off.

   To install the new nozzle tip, align it with the nozzle and push it firmly into place until it is fully seated.

TROUBLESHOOTING

If the below troubleshooting options do not resolve any issues, Please contact our service center at 847.458.2334 for assistance.

Problem	Possible Causes	Possible Solutions
Water Does not Spray	The water supply is turned off	Turn water supply on
	The bidet hose is twisted	Reposition the hose to avoid any twists
	The bidet hose is clogged	Turn the water supply off and disconnect the hose to check for any clogs
Water pressure is too low	Water pressure setting is set to low	Adjust the water pressure to a higher setting
	The bidet hose is clogged	Turn the water supply off and disconnect the hose to check for any clogs
Water is cold	Water temp is set to low	Adjust the water temp to a higher setting
Wash functions to not activate	The seat sensor is not activated	Ensure skin contact is being made with the seat sensor
Bidet does not turn on	The power is off	Ensure the bidet seat is plugged in and press the Power button
	Circuit issue	Check to ensure there are no issues with the circuit the bidet seat is plugged into
Seat temperature is too low	The seat temp is set too low	Adjust the seat temp to a higher setting

SPECIFICATIONS

Specifications		Bidet Seat
Product Model		BB900E
Rated Voltage		120 V~, 60 Hz
Rated Power		1050 W
Water Inlet Temperature		41 - 104°F
Water Heating		Instant
Inlet Water Pressure	Minimum Water Pressure	11.6 psi with water flow above 0.61 gal/10s
	Maximum Water Pressure	101.5 psi (in a static condition)
Water Heating Method		Instant Heating
Warm Water Temperature		Off/about 93.2 - 102.2°F
Dimensions		20.4 in x 16.06 in x 3.94 in

WARRANTY

1 YEAR LIMITED WARRANTY

Bemis warrants that this product will be free of defects in material, workmanship, and title for a period of one (1) year from the date of original purchase. If you provide written notice of a defect to Bemis within the applicable warranty period and provide adequate documentation or evidence that establishes a Product defect to Bemis's satisfaction, your sole remedy is the repair, replacement, or refund of the Product's purchase price (less shipping, if applicable), at Bemis's option. Bemis may, at its option, require the return of any Product for inspection and testing before honoring any defect claim. This Limited Warranty excludes component parts not specified by Bemis, and excludes costs related to shipping and labor, including removal, disposal, repair, or replacement of the defective Product and installation of replacement Product (if applicable). Products returned for a refund must be in original packaging and in saleable condition, and may be subject to a restocking fee. Discontinued colors or models, and custom or specially ordered Products cannot be returned for a refund.

This Limited Warranty is void if: (a) the Product has not been installed, used,or maintained according to any applicable written materials, including written instructions, specifications, packaging, and manuals; (b) the Product is not used for the intended application, or (c) the Product has been modified or repaired without Bemis's express written permission. THIS LIMITED WARRANTY IS PROVIDED IN LIEU OF ALL OTHER WARRANTIES, EXPRESS OR IMPLIED, INCLUDING THE IMPLIED WARRANTIES OF MERCHANTABILITY AND FITNESS FOR A PARTICULAR PURPOSE. BEMIS EXPRESSLY DISCLAIMS LIABILITY FOR SPECIAL, PUNITIVE, EXEMPLARY, CONSEQUENTIAL OR INCIDENTAL DAMAGES ASSOCIATED WITH THE PRODUCT, INCLUDING LOST PROFITS OR BUSINESS INTERRUPTIONS. BEMIS'S LIABILITY UNDER THESE TERMS AND CONDITIONS SHALL NOT EXCEED THE PURCHASE PRICE OF THE PRODUCTS.

Please see BemisMfg.com/terms-and-conditions for complete warranty terms

BIOBIDET®
BY BEMIS

BIOBIDET INNOVATION LLC

460 Jennings Drive, Lake in the Hills, IL 60156
T: 847.458.2334
F: 847.854.1296
support@biobidet.com
www.biobidet.com

THANK YOU!

BIOBIDET®
BY BEMIS

BioBidet Innovation LLC
460 Jennings Drive
Lake in the Hills, IL 60156

T: 847.458.2334
TOLL-FREE: 877.339.5214

support@biobidet.com
www.biobidet.com

Intertek
5013951