BIOBIDET®
BY BEMIS

BB-1000

USER MANUAL



Registration and Installation Resources

Questions?
We're here to help.

847.458.2334
support@biobidet.com
www.biobidet.com

Technical support and alternate fittings are available.

TABLE OF CONTENTS

04 **PRODUCT INFORMATION**

Important Safeguards
Overview & Parts
Wireless Remote

09 **GETTING STARTED**

Functions & Features

13 **INSTALLATION**

Installation Guide

17 **MAINTENANCE**

Cleaning Tips
Replacing The Deodorizer Filter
Removing The BB-1000
Draining The Warm Water Tank
Troubleshooting Guide
Specifications

23 **WARRANTY**

Warranty
Customer Support

IMPORTANT SAFEGUARDS

PLEASE OBSERVE THE FOLLOWING PRECAUTIONS AND INSTRUCTIONS BEFORE INSTALLATION AND USE.

- This product must be connected to a grounded 120V GFCI (Ground Fault Circuit Interrupt) outlet. Do not connect the power cord if it is damaged or broken. Do not plug the product into a loose electric outlet.
    - It is recommended to operate this product on a separate circuit. Sharing a circuit could cause the breaker to trip or lights to flicker.
    - If it is necessary to use an extension cord, use only a three-prong extension cord plugged into a proper GFCI outlet. The marked rating of the extension cord should be equal to or greater than the electrical rating of the unit (10 amp). Consult a qualified electrician or service person if you are not sure whether the unit is properly grounded.
- Do not open this product for repair without authorization from the manufacturer. Only qualified service personnel should service this product. Do not use accessories not recommended by the manufacturer.
- Connect this product to a potable cold water supply line.
- Close supervision is necessary when this product is used by children, elderly, or adults with sensitive skin. A low temperature burn may occur when the skin has been in contact with an object at relatively low temperature for an extended period of time.
- If using any chemical toilet bowl cleaner, be sure to wipe up any spills that splash onto the bidet. Do not use benzene or any acid chemical detergent, as they can cause discoloration. Only neutral detergents are permitted.
- Do not plug in the power cord before connecting the water supply hose.
- Install in an area with adequate ventilation to avoid high levels of humidity which can damage the electronic components.
- Do not touch the power cord with wet hands or reach for a product that has fallen into water. Unplug immediately.
- Unplug the bidet seat when cleaning or detaching from the toilet bowl. Do not plug in until plumbing work has been completed.
- Keep the power cord away from heated surfaces to prevent a fire hazard. Keep any flammable materials away from this product at all times.

WATER DOES IT **BETTER**®

OVERVIEW

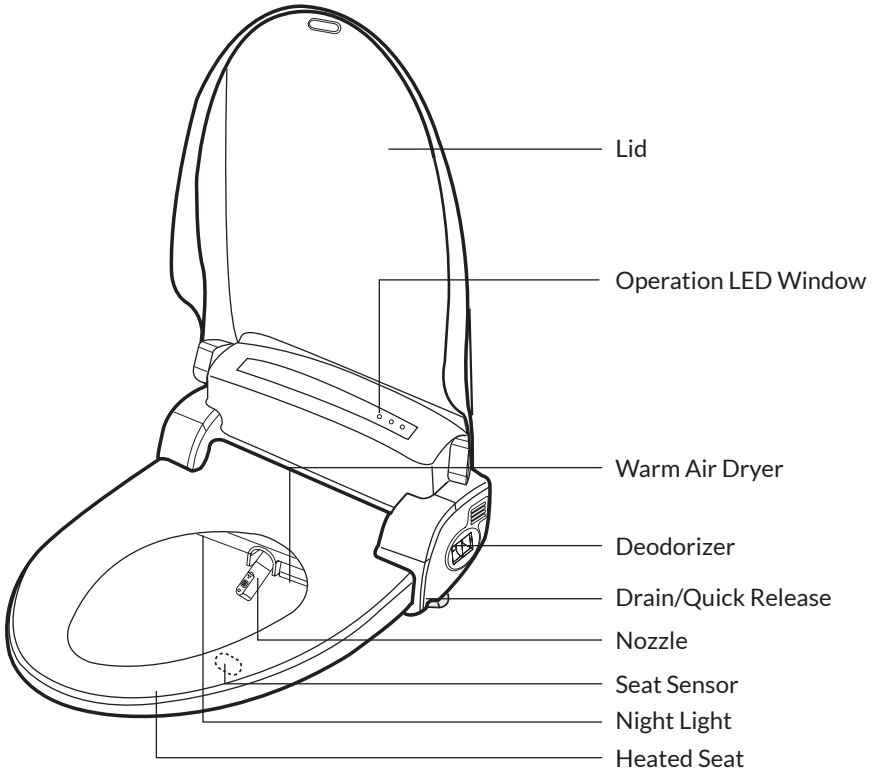

Side Control Panel

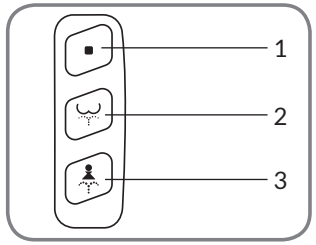

1. Stop Button
2. Rear Wash
3. Front Wash

3-In-1 Nozzle

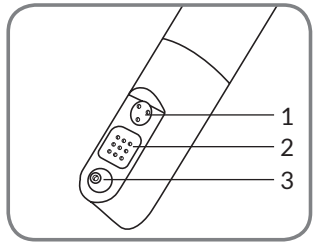

1. Rear Wash
2. Front Wash
3. Vortex Wash

PARTS LIST

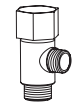

T-Valve
*Rubber washer inside

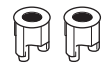

(2) Nuts

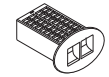

Deodorizer
*installed in unit



(2) Cone Packings

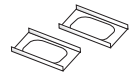

(2) Bolt Guides



(2) Mounting Bolts

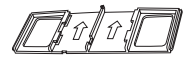

Catch Plate



Bidet Hose



Remote Control

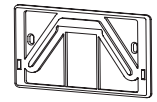

Remote Control Holder



(2) AA Batteries

Recommended Installation Tools



Wrench



Phillips Screwdriver

WIRELESS REMOTE

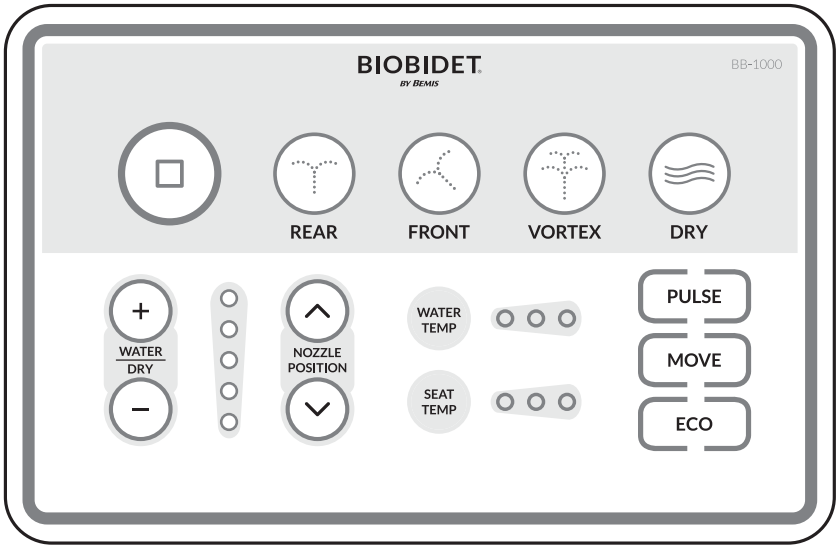

- Stop Button
- Rear Wash
- Front Wash
- Vortex Wash
- Warm Air Dryer
- Adjustable Water Pressure
- Adjustable Nozzle Position
- Adjustable Water Temperature
- Adjustable Seat Temperature
- Massage
- Move
- Eco Mode

FUNCTIONS & FEATURES

Sit Down On The Seat

This product includes a built-in seat sensor that must be activated with skin contact in order to operate bidet functions.

When you sit down on the seat and activate the seat sensor, the deodorizer fan will start. The automatic cleaning function will rinse the nozzle before each use.

Stop Button

Stops all operations.

Rear Wash

Press to activate the Rear Wash cycle, carefully crafted with the optimum cleansing angle and spray pattern.

Front Wash

Press to activate the Front Wash cycle, which offers an alternate accommodating spray pattern.

Vortex Wash

Press to activate a focused wash with higher water pressure.

Warm Air Dryer

Press to activate the warm air dryer. The dryer will automatically operate for 3 minutes. Press the “High” or “Low” (+ , -) buttons to adjust the dryer temperature.

Adjustable Water Pressure

Press “High” or “Low” (+, -) to adjust the pressure of the water spray to your desired comfort level.

Adjustable Nozzle Position

Adjust the nozzle position forward or backward to achieve maximum cleanliness and comfort by pressing the “Front” or “Rear” (^ , v) buttons.

Adjustable Seat & Water Temperature

Adjust the water and seat temperature by pressing the corresponding button to cycle through preset temperature levels.

WATER TEMP

Water Temp.

SEAT TEMP

Seat Temp.

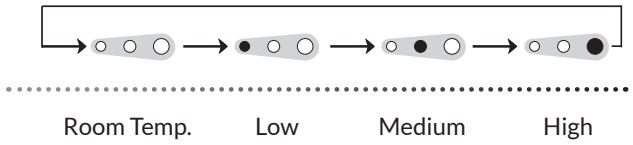

Deodorizer

Press the "Stop" and "Water" button to adjust the deodorizer up to 4 levels of intensity. When turned on, the deodorizer will automatically activate when seated to reduce odors, and remains active for 1 minute after standing up.

- Single short beep - Deodorizer **enabled**
- Double short beep - Deodorizer **disabled**

Deodorizer

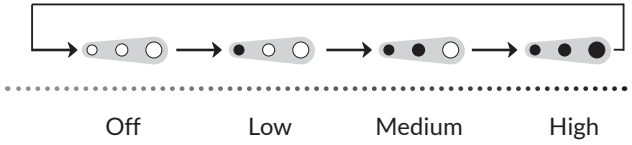

MOVE

Nozzle Oscillation

Press "Move" during a wash cycle to move the nozzle back and forth for a wider cleaning experience. Change the nozzle position by pressing the “Front” or “Rear” (^, v) buttons. This will not work during Vortex wash.

Automatic Oscillation Feature - You can set this function to automatically oscillate. While not seated, press and hold the “Move” button to turn auto oscillation on. Press and hold again to turn it off.

PULSE

Pulse

Press “Pulse” during a wash cycle to activate a pulsating spray pattern. Change the water pressure with the “High” or “Low” (+, -) buttons.

Automatic Massage Feature - You can set this function to automatically pulsate whenever the seat is occupied and the Rear or Front washes are in operation. Press the “Massage” button for 3 seconds until you hear a chime. Proceed with Rear or Front Wash. To cancel, press the button again for 3 seconds.

ECO

Eco Mode

Press “Eco Mode” to toggle between energy saving features. Press once to activate Eco 1. This keeps the warm water temperature at 90°F. Press again for Eco 2 (Smart Mode). This lowers the water temperature when not in use. Press again to turn off.

Nozzle Cleaning

Automatic - This product has an automatic nozzle self-cleaning function that cleans the nozzle before and after each use.

Manual - Press the “Rear” button on the side panel without occupying the seat. The nozzle will fully extend without spraying. Gently clean the nozzle with a soft cloth or toothbrush. Press the “Stop” button to retract the nozzle when you are finished.

Bowl Night Light On/Off

Press and hold the "Front Wash" button on the side panel for 3 seconds while NOT seated on the toilet seat to turn the night light on. Press and hold again to turn it off.

MOVE

Sound On/Off

Press and hold the "Move" button for 3 seconds while seated on the toilet seat to turn the sound off. Press and hold again to turn it back on.

SEAT TEMP

Remote Control Channel Setting

- Press and hold the "Stop + Seat Temp" buttons for 3 seconds. (The remote control LED will blink.)
- Set the channel using the + and - buttons for Water Pressure / Dry Temperature. (Up to 11 channels available)
- Press and hold the "Stop + Front Wash" buttons on the side panel for 3 seconds.
- The Operation LED Window will blink 3 times, completing the setup.

INSTALLATION GUIDE

BEFORE INSTALLATION

Do not plug the power cord in until installation is complete.

Please contact our service center at 847.458.2334 for alternate fittings or assistance with this process.

1. Turn Off Water

Turn off the water shut-off valve. Drain the toilet tank completely by flushing the toilet. Unscrew the hose connected to the toilet tank.

You may want to have a towel ready to catch any residual water.



2. Remove Toilet Seat

Remove mounting bolts to release the existing toilet seat from the toilet.



3. Install Catch Plate

Place the catch plate and the bolt guides over each mounting hole. Insert the mounting bolts through the guides, catch plate, and into the mounting holes. Slide the cone packing onto the bolts and fasten to secure the bidet.

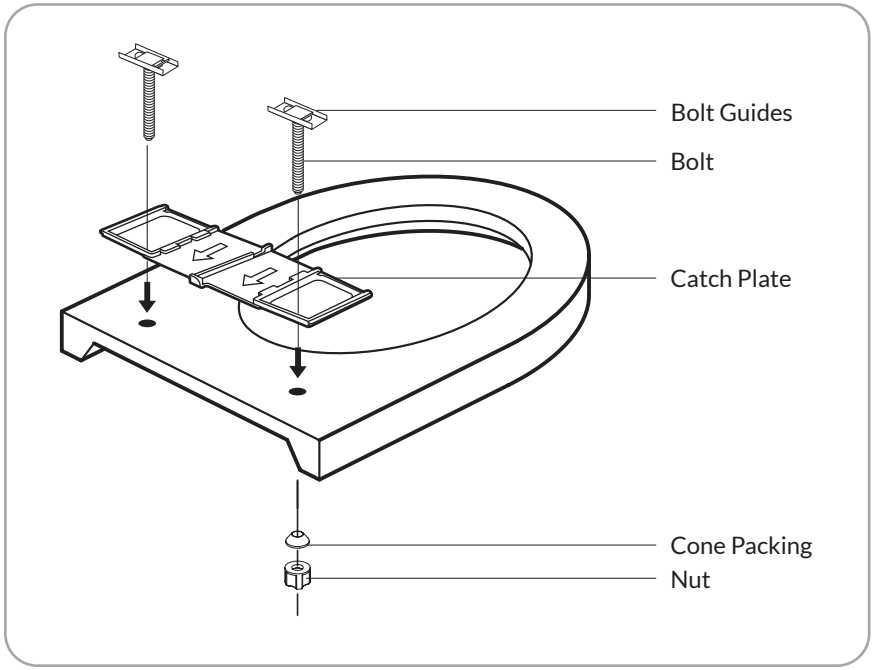

4. Install Your BB-1000

Slide the bidet seat all the way onto the catch plate until you hear a click.

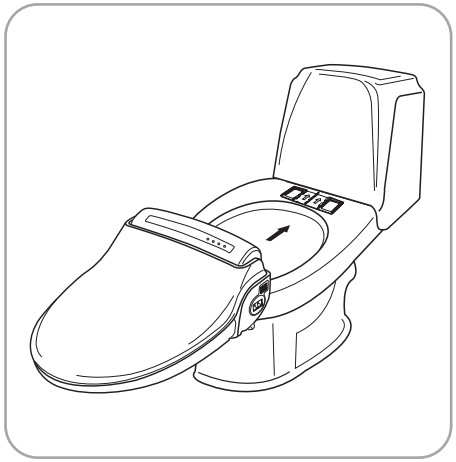

5. Connect the Water Hoses

a. Install the t-valve onto the toilet tank. Ensure the rubber gasket is properly seated inside the t-valve.

b. Connect your existing toilet hose to the water shut-off valve and t-valve.

c. Connect the bidet hose to the bidet seat and t-valve.

d. Open the water shut-off valve. Check for any leaking or dripping. Use a wrench to tighten any loose connections.

***Shut-off valves may vary. If supplied parts do not fit, please call 847.458.2334. Alternate fittings may be available upon request.**

6. Plug It In!

Check for any water leaks. Plug the power cord into a dedicated 120V power outlet and the LED light will start flashing. Wait until the LED light stops flashing. and press “Rear” or “Front" Wash button to fill the tank.

7. Mounting the Remote

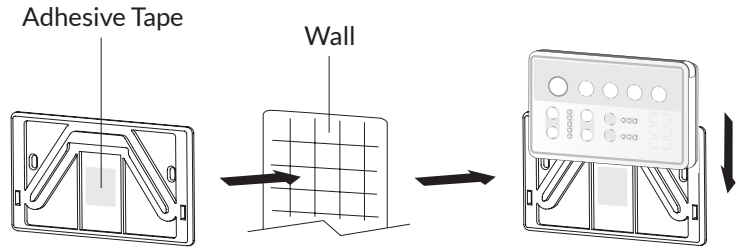

a. Remove the adhesive cover from the back of bracket and place the bracket where desired.

b. Insert supplied batteries and close the battery cover.

c. Ensure the batteries are inserted properly according to polarity.

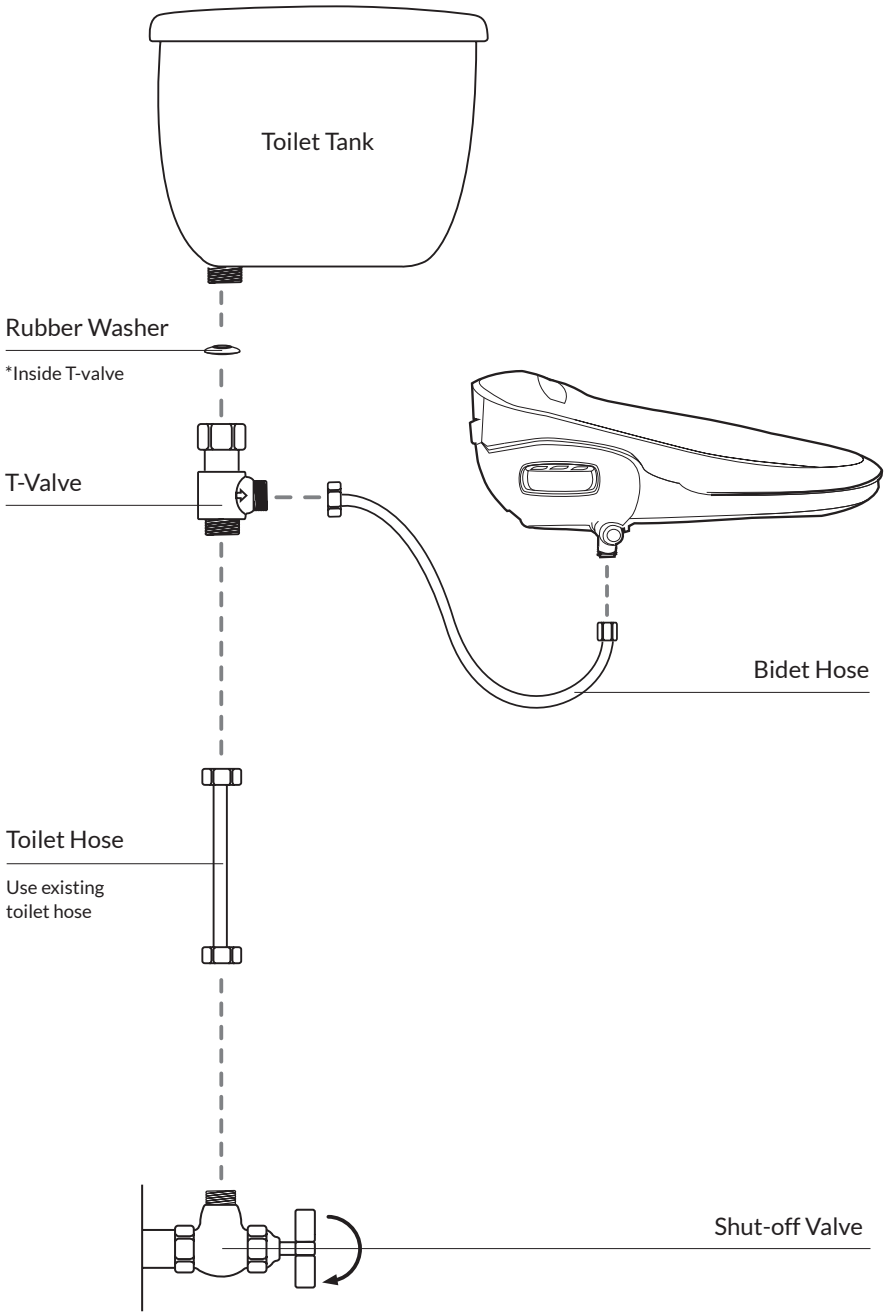

MAINTENANCE

Cleaning the BB-1000

- When you clean this product, do not use thinner, benzene or toilet bowl cleaner, as it may cause discoloration or damage.
- Disconnect the power cord and use a wet cloth when you clean this product.

Replacing the Deodorizer Filter

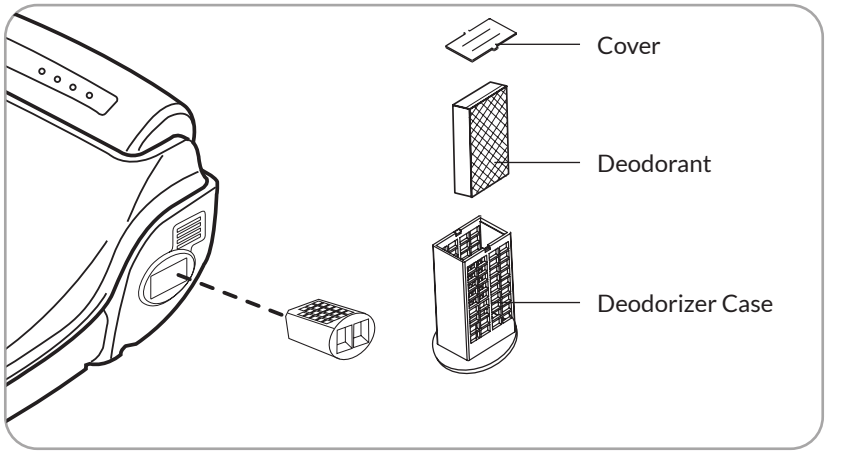

The deodorizer cartridge is designed to last the lifetime of the bidet. If necessary, the filter can be changed by the following the diagram above.

Cleaning the Strainer

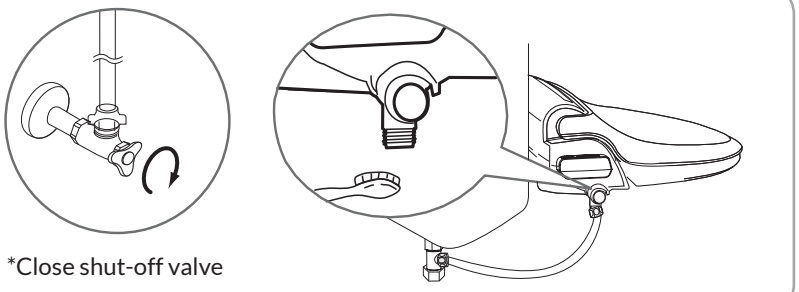

*Close shut-off valve

This product will not operate properly if the strainer is clogged.
Please clean the strainer regularly.

1. Unplug the power cord and close the water shut-off valve.
2. Unscrew the bidet hose from the bidet seat.
3. Clean the strainer with a small brush.
4. Re-connect the bidet hose and open the water shut-off valve.
5. Plug in the power cord.

Water Filter Maintenance

- Use of external water filters is only recommended in areas with known hard water issues. If a filter is used, it should be replaced every 3 months.
- This product is designed and intended for use exclusively with Bio Bidet Carbon & Iodine water filters. The purchase or use of any other water filter is not the responsibility of Bio Bidet Innovation LLC. As such, any use of non Carbon or Iodine water filters is prohibited and will void the warranty for those Bio Bidet products. Bio Bidet will not be responsible for any resulting damages or claims related to the misuse or distribution of non Bio Bidet Carbon & Iodine filters.

Removing the BB-1000

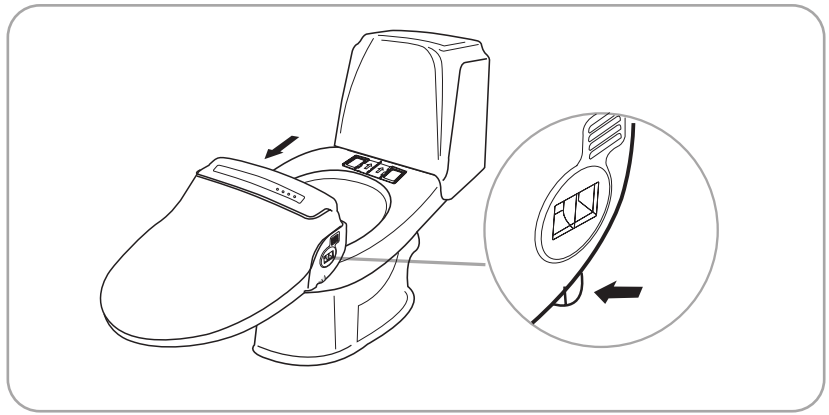

1. Disconnect the power plug.
2. Close water supply shut-off valve.
3. Drain the water from the bidet by holding the drain button as shown above.
4. Remove the bidet seat from toilet as illustrated.

Draining the Warm Water Tank

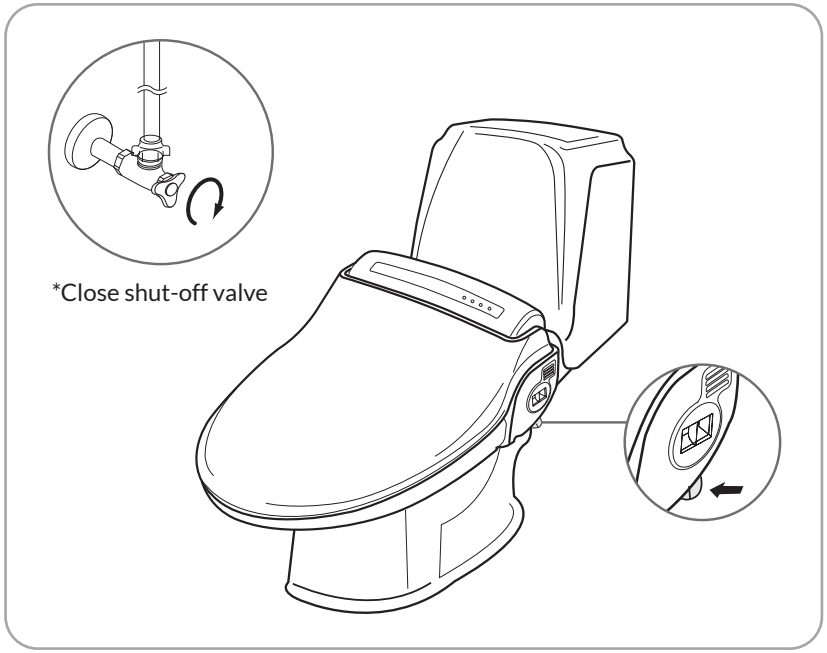

If you do not intend to use this product for 14 days or longer, drain the water from this product's warm water tank.

Before draining, unplug the power cord and wait 30 minutes until the unit has cooled down. Do not insert your finger into the drain hole.

1. Disconnect the power plug.
2. Close the water shut-off valve.
3. Press the drain button until the water is completely drained from water tank.

Open the water shut-off valve to refill and resume usage.

TROUBLESHOOTING GUIDE

Trouble	Cause	Solution
Water does not spray	• The water tank is not filled. • The shut-off valve is closed.	• Wait about one minute. Press the desired washing button once again. • Open the shut-off valve
The unit is not operating	• Disconnected the power cord. • The seat is not occupied. • Remote batteries are depleted.	• Connect the power cord. • Check the circuit breaker. • Activate the seat sensor. • Replace the batteries.
Water is leaking	• Check the water connections.	• If water is leaking from the main unit, call Bio Bidet customer support.
The water pressure is weak	• The water pressure level is set to "Low". • The strainer is clogged.	• Set the water pressure to "High" • Clean the strainer.
The water is not warm	• The water temperature is set to "Low" • Continuous operation has depleted the supply of warm water.	• Set the water temperature to "High" and wait about 3 minutes.
The seat and dryer are not warm	• The seat & dryer temperature is set to "Low"	• Set the seat & dryer temperature to "High"

SPECIFICATIONS

Specifications		BB-1000
Power Rating		120Vac, 60Hz, 660W
Water Inlet Pressure		0.04 ~ 0.74MPa (0.4 ~ 7.5 kgf/cm^2)
Power Cord		4 feet
Wash Device	Rear Wash	Max. 1.2 L/min (Max. 0.32 GPM)
	Front Wash	Max.1.2 L/min (Max. 0.32 GPM)
	Adjustable Water Pressure	5 Levels
	Warm Water Temp	Room Temp - Low, Normal, High
	Safety Devices	Thermal fuse, Thermal switch, Float switch
Heated Seat	Temperature	Room Temp - Low, Normal, High
	Heater	55 W
Inlet Water Temp.		37.4°F ~ 95°F (3°C~ 35°C)
Ambient Temp.		37.4°F ~ 104°F (3°C~ 40°C)
Dimensions	Elongated	W: 17.9 in / L : 20.6 in / H : 7.28 in
	Round	W: 17.9 in / L: 19.4 in / H: 7.28 in
Weight (lbs)		11.4 lbs

WARRANTY

3 YEAR LIMITED WARRANTY

Bemis warrants that this product will be free of defects in material, workmanship, and title for a period of three (3) years from the date of original purchase.

If you provide written notice of a defect to Bemis within the applicable warranty period and provide adequate documentation or evidence that establishes a Product defect to Bemis's satisfaction, your sole remedy is the repair, replacement, or refund of the Product's purchase price (less shipping, if applicable), at Bemis's option.

Bemis may, at its option, require the return of any Product for inspection and testing before honoring any defect claim. This Limited Warranty excludes component parts not specified by Bemis, and excludes costs related to shipping and labor, including removal, disposal, repair, or replacement of the defective Product and installation of replacement Product (if applicable). Products returned for a refund must be in original packaging and in saleable condition, and may be subject to a restocking fee. Discontinued colors or models, and custom or specially ordered Products cannot be returned for a refund.

This Limited Warranty is void if: (a) the Product has not been installed, used, or maintained according to any applicable written materials, including written instructions, specifications, packaging, and manuals; (b) the Product is not used for the intended application, or (c) the Product has been modified or repaired without Bemis's express written permission.

THIS LIMITED WARRANTY IS PROVIDED IN LIEU OF ALL OTHER WARRANTIES, EXPRESS OR IMPLIED, INCLUDING THE IMPLIED WARRANTIES OF MERCHANTABILITY AND FITNESS FOR A PARTICULAR PURPOSE. BEMIS EXPRESSLY DISCLAIMS LIABILITY FOR SPECIAL, PUNITIVE, EXEMPLARY, CONSEQUENTIAL OR INCIDENTAL DAMAGES ASSOCIATED WITH THE PRODUCT, INCLUDING LOST PROFITS OR BUSINESS INTERRUPTIONS. BEMIS'S LIABILITY UNDER THESE TERMS AND CONDITIONS SHALL NOT EXCEED THE PURCHASE PRICE OF THE PRODUCTS.

Please see BemisMfg.com/terms-and-conditions for complete warranty terms.

BIOBIDET®
BY BEMIS

BIOBIDET INNOVATION LLC

460 Jennings Drive, Lake in the Hills, IL 60156
T: 847.458.2334
F: 847.854.1296
support@biobidet.com
www.biobidet.com

THANK YOU!

BIOBIDET®
BY BEMIS

BioBidet Innovation LLC
460 Jennings Drive
Lake in the Hills, IL 60156

T: 847.458.2334
TOLL-FREE: 877.339.5214

support@biobidet.com
www.biobidet.com

7.26 | 1.5